503 MASTER

Verification Test & Procedures

503 MASTER

AS-503

VERIFICATION TEST PROGRAMS

73V0000

25 JULY 1968

G. H. Downs for

R. H. LONG
TEST ENGINEERING

F. E. Lumbard

F. E. LUMBARD
SATURN V SDF MANAGER

AS-503
DOCUMENT INDEX
PROGRAM VERIFICATION PROCEDURES
24 JULY 1968

1. SPECIAL TEST

73V1100	GENERAL VERIFICATION
73V1101	TEST PROGRAM AVAILABILITY VERIFICATION
73V1102	RECOVERY FROM COMPUTER FAILURE

2. OPERATING SYSTEM FUNCTIONS

73V1201	(NT98) (NT99) DISCRETE INITIALIZATION AND MODIFICATION
73V1202	(TPC) TEST PROGRAM CONTROL
73V1203	(FUNC) FUNCTION EXECUTOR
73V1204	(DMON) DISPLAY MONITOR
73V1205	(ALNA) DISCRETE DISPLAY SERVICE
73V1206	(SMSG) SYSTEM MESSAGE
73V1207	(UTIL) UTILITY EXECUTIVE
73V1208	(SCP) SENSE CONTROL PANEL
73V1209	(NT95) MLC REMOTE LOAD TEST
73V1210	(NT94) DCC REMOTE LOAD-UNLOAD
73V1211	(ZT96) (ZE96) SYSTEM CLOSEOUT
73V1212	(SE93) DISCRETE MONITOR INTERRUPT
*73V1213	(ATGT) ATOLL UTILITY
*73V1214	(ATCO) ATOLL CONTROL EXECUTIVE
*73V1215	(ATCM) ATOLL COMPILER
73V1216	(DESC) MLC SELF CHECK
73V1217	(DTSC) LCC SELF CHECK
73V1218	(DT01) LCC GMT INTERFACE
73V1219	(DT02) DDAS ON LINE FUNCTIONAL FOR LCC
73V1220	(DT04) ACE DATA LINK ON LINE CHECKOUT
73V1221	(SSRP) SYSTEM RECOVERY

3. MEASUREMENTS AND TELEMETRY PROGRAM

73V1302	(MU02) GSE/RACS TOLERANCE UPDATE
73V1303	(ME01) RACS RAPID CONTROL
73V1304	(MT01) GSE/VEHICLE MEASURING
73V1305	(TT01) TELEMETRY PREFLIGHT CALIBRATION
73V1308	(ME02) ECS TEMP & PRESS GRAPHIC DISPLAY

* To be supplied at a later date

4. GUIDANCE SYSTEM (LVDC/LVDA) PROGRAMS

73V1401 (FT43) COMPUTER INTERFACE UNIT TEST
73V1402 (FT04) POWER ON, OFF, AND/OR REDUNDANCE
73V1403 (FT03) LVDC/LVDA SWITCH SELECTOR INTERFACE
73V1404 (FT05) DATA LOAD AND/OR VERIFY
73V1405 (FT07) SECTOR DUMP
73V1406 (FT08) LVDC CORE MAP LOADER
73V1407 (FT35) LVDC DDAS TEST PROGRAM
73V1408 (FT20) SELF TEST
73V1409 (FT25) DISCRETE INPUT TEST
73V1410 (FT33) DISCRETE OUTPUT TEST
73V1411 (FT31) ACCELEROMETER PULSE COUNT TEST
73V1412 (FT23) SECTOR SUM CHECK
73V1413 (FT45) DIGITAL COMMAND SYSTEM TEST
73V1414 (FT47) PREFLIGHT COMMAND TEST
73V1415 (FT10) LADDER OUTPUT TEST
73V1416 (FT06) GIMBAL ANGLE READ
73V1417 (FT42) PREPARE TO LAUNCH
73V1418 (FT27) SIMULATED FLIGHT MONITOR
73V1419 (FZ01) SIMULATED FLIGHT POST PROCESSOR
73V1420 (FT54) STEERING TEST
73V1421 (FU01) SIMULATED PLUS TIME TABLE GENERATOR
73V1422 (FU77) ACCELERATED TIME CONVERSION TEST
73V1423 (FT49) ACCELEROMETER MONITOR DISPLAY CONTROL
73V1424 (FE50) ACCELEROMETER MONITOR
73V1425 (FT55) TELEMETRY TEST
73V1426 (FT37) PREPARE TO LAUNCH SIMS FLIGHT

5. ST-124M PLATFORM SYSTEM PROGRAMS

73V1503 (GT17) ST-124M STATUS
73V1504 (FT16) AZIMUTH LAYING
73V1505 (GE01) AZIMUTH LAYING MONITOR

6. NETWORK SYSTEM PROGRAMS

*73V1601 (VASS) SLCC SWITCH SELECTOR INTERFACE
*73V1602 (NA03) SWITCH SELECTOR FUNCTIONAL
73V1603 (NT07) PRESSURE SWITCH FUNCTIONAL S-IC
73V1604 (QALS) S-II PROPELLANT LEVEL SENSORS
73V1605 (WACS) CUTOFF SENSORS FUNCTIONAL
73V1608 (XASS) S-IVB SWITCH SELECTOR RESET
73V1613 (NT97) (NE97) DISCRETE ACTIVITY MONITOR
73V1614 (NTDR) DISCRETE RESPONSE TIME TEST

* To be supplied at a later date

6. NETWORK SYSTEM PROGRAMS (Continued)

73V1615	(NEBM)	S-IC BUS MONITOR
73V1616	(QAPL)	S-II PANEL LAMP TEST
73V1617	(VASC)	SIGNAL CONDITIONING TEST
73V1618	(XAPD)	S-IVB POWER DISTRIBUTION TEST
73V1619	(VAVS)	LAUNCH VEHICLE SIMULATED FLIGHT PREPARATIONS
*73V1620	(VAED)	SPACE VEHICLE ABORT TEST
73V1621	(XARS)	S-IVB RANGE SAFETY FUNCTIONAL TEST PROGRAM
73V1622	(QAS2)	S-II SWITCH SELECTOR FUNCTIONAL
73V1623	(NES4)	S-IVB POWER DISTRIBUTION DATA DISPLAY
*73V1624	(VACM)	COMMAND MODULE INDICATION VERIFICATION TEST
*73V1625	(VAEA)	ENGINE OUT ABORT TEST
*73V1626	(VARE)	RATE EXCESSIVE TEST
*73V1627	(VAPR)	EDS PREPARATION TEST
73V1628	(WAPO)	S-IC POWER ON
73V1629	(WAPX)	S-IC POWER TRANSFER
73V1630	(WASP)	S-II SEPARATION SYSTEM FUNCTION

7. CONTROL SYSTEM PROGRAMS

73V1701	(CT00)	APS FIRING TEST
73V1704	(CTA1)	FLIGHT CONTROL RAMP SUBSTITUTE
73V1705	(CTC1)	GAIN TEST
73V1706	(CTC2)	RELAY REDUNDANCY
73V1707	(CTC3)	COMPARATOR TEST
73V1708	(CTC5)	APS GAIN TEST
73V1709	(CTC4)	EDS CONTROL RATE GYRO TEST
73V1710	(CTC6)	END TO END POLARITY TEST

8. PROPELLANT SYSTEM PROGRAMS

73V1801	(BT01) (BE01) (BE02)	S-IC PROPELLANT LOADING MONITOR
73V1802	(PTP5)	S-II PROPELLANT UTILIZATION
73V1805	(PTP4)	S-IVB PROPELLANT UTILIZATION

* To be supplied at a later date

REVISIONS			
SYM	DESCRIPTION	DATE	APPROVAL

PURPOSE

This document contains the updated AS-503 Verification Test Program Procedures to be used to accomplish the verification of AS-503 Test Programs

REVISIONS			
SYM	DESCRIPTION	DATE	APPROVAL

PURPOSE

This document contains the updated AS-503 Verification Test Program Procedures to be used to accomplish the verification of AS-503 Test Programs

REVISIONS			
SYM	DESCRIPTION	DATE	APPROVAL

SOURCE DATA SHEET

The following listed government furnished documentation was used in the preparation of this document release:

GFD	DATE OF ISSUE	REVISION DATE
Specifications for the Operating System for the Saturn V Launch Computer Complex, MSFC No. 888-4-440-4 Ch 6	4/5/66	8/1/68
Specification for the Test Programs for the Saturn V Launch Computer Complex Vehicle AS-503, MSFC NO. 1-4-441-9 Ch 7	7/21/67	8/1/68
Operator Reference Manual for SLCC Programming System, MSFC No. III-4-440-5	5/1/68	6/15/68
AESS IU ESE Sat V 40M14490	12/23/66	6/17/68
IU Elect. Schematic, 40M33221	4/5/66	5/22/68
AESS S-IC POWER ESE Saturn V, 40M13614	8/25/65	12/4/67
AESS S-IC ESE Sat V, 40M10616	10/18/65	2/28/68
AESS S-IC Stage Simulator, 40M34240	11/28/66	3/25/68
AESS S-IC MSE Simulator, 40M13442	9/6/65	5/16/68
AESS S-II ESE Sat V, 40M10590	10/29/65	6/4/68
AESS S-II Stage Sim. 40M34242	6/22/67	3/22/68

REVISIONS			
SYM	DESCRIPTION	DATE	APPROVAL

GFD TITLE	DATE OF ISSUE	REVISION DATE
Interface Cont. DOC AS-503 Flight Seq. Prog. 40M33621B	2/2/66	7/23/68
AESS S-IVB ESE Sat V, 40M13870	9/22/65	2/15/68
AESS EDS ESE, 40M13162	8/23/65	4/24/68
AESS Apollo S/C Sim., 40M13907	9/16/65	2/8/68
AESS S-IVB MSE Sim., 40M34245	11/27/65	4/30/68
AESS LVDA Interface, 50M36401	10/17/66	5/21/68
Saturn V ESE Computer DEE-6 Running List, 40M17360-3	9/6/66	6/28/68
IP & C - 500ST, 50M13020	5/19/65	3/8/68
DOCUMENTS IP & C S-IVB-503/N, 1B43567	3/15/66	6/24/68
AESS GROUND DDAS Saturn V, 40M13921	9/3/65	7/8/68

MSFC FORM 422 (VERTICAL) (AUGUST 1960)

NOTICE — When Government drawings, specifications, or other data are used for any purpose other than in connection with a definitely related Government procurement operation, the United States Government thereby incurs no responsibility nor obligation whatsoever; and the fact that the Government may have formulated, furnished, or in any way supplied the said drawings specifications or other data is not to be regarded by implication or otherwise as in any manner licensing the holder or any other person or corporation, or conveying any rights or permission to manufacture, use, or sell any patented invention that may in any way be related thereto.

APPLICATION		PART No.	MF	REVISIONS			
NEXT ASSY	USED ON			SYM	DESCRIPTION	DATE	APPROVAL

AS-503

VERIFICATION PROCEDURE

GENERAL VERIFICATION

73V1100

UNLESS OTHERWISE SPECIFIED DIMENSIONS ARE IN INCHES TOLERANCES ON: FRACTIONS DECIMALS ANGLES	ORIGINAL DATE OF DRAWING 7/23/68 DRAFTSMAN / CHECKER TRACER / CHECKER ENGINEER / ENGINEER	GENERAL VERIFICATION AS-503	GEORGE C. MARSHALL SPACE FLIGHT CENTER NATIONAL AERONAUTICS AND SPACE ADMINISTRATION HUNTSVILLE, ALABAMA
MATERIAL	SUBMITTED P. R. LeDOUX		
HEAT TREATMENT			
FINAL PROTECTIVE FINISH	APPROVED G. G. DOWNS	SCALE / UNIT WT	DWG SIZE A 73V1100 SHEET 1 OF 7

REVISIONS			
SYM	DESCRIPTION	DATE	APPROVAL

1.0 SCOPE

This procedure is the Control Document for Part III Phase I, General Verification as specified in the AS-503 Verification Test Plan. This procedure verifies compatibility of the computer program link between launch personnel and the Computer System/ Launch Vehicle. Successful performance of this procedure is a prerequisite of subsequent verification procedures.

2.0 GOVERNMENT FURNISHED DOCUMENTS

2.1 "Specification for the Operating System for the Saturn V Launch Computer Complex", MSFC No. 888-4-440-4, dated 1 August 1968.

2.2 Test Program Specifications Saturn V Launch Computer Complex, MSFC No. 1-4-441-11, dated 1 August 1968.

2.3 Operator Reference Manual for SLCC Programming System, MSFC No. III-4-440-5, dated 15 June 1968.

3.0 GENERAL NOTES

A chronological test history log will be maintained by the test conductor and each system engineer during the conduct of this procedure.

The recorded data acquired during the execution of this procedure will be identified and assembled for inclusion in the overall verification data package.

4.0 PREREQUISITES

4.1 The following computer diagnostics must have been run within four days prior to commencing this procedure.

4.1.1 RCA-110A

4.1.1.1 Core Test

4.1.1.2 Instruction Test

REVISIONS			
SYM	DESCRIPTION	DATE	APPROVAL

4.1.1.3 Drum Test

4.1.1.4 Priority Interrupt Test

4.1.1.5 Magnetic Tape Transport Test

4.1.1.6 Line Printer Test

4.1.1.7 Interval Timer Test

4.1.1.8 Card Punch and Reader Test

4.1.1.9 Discrete I/O - Monitor Mode Test

4.1.1.10 IOR Test

4.1.1.11 Analog Test

4.1.1.12 DDAS IODC Test

4.1.1.13 Display IODC - Saturn V Test

4.1.1.14 Discrete Input Test

4.1.1.15 Data Link - Two Computer Test

4.1.1.16 DCE Test

4.1.2 DEE-6C

4.1.2.1 Memory Diagnostic

4.1.2.2 Instruction Diagnostic

4.1.2.3 P&S Register Diagnostic

4.1.2.4 Extended Mode Interface Tape Test

4.1.2.5 Extended Mode I/O Test

4.1.2.6 Teletype Echo Test

4.1.2.7 System Test Program

4.1.2.8 Discrete Input Filter Verification

4.1.3 DDP-224

4.1.3.1 CPU Diagnostic Test #1

REVISIONS			
SYM	DESCRIPTION	DATE	APPROVAL

4.1.3.2 CPU Diagnostic Test #2

4.1.3.3 CPU Diagnostic Test #3

4.1.3.4 Memory Test

4.1.3.5 Display Test

4.2 Applicable interface programs will be run as required in addition to the above diagnostics.

5.0 PROCEDURE

Sequence procedure begins on page 5.

TIME	SEQUENCE	COMMAND STATION	RESPONSE STATION	DESCRIPTION	REMARKS
				NOTE The SDF will be in Electrical Simulator Configuration for this procedure with the exception of S-IVB and S-IU which will be in the 500ST Mock-Up Configuration. The following equipment will be on before this procedure is initiated. DEE-6C All auxiliary power DDAS DRS equipment in LCC and MLF DDAS CIU's in MLF and LCC T/M Checkout Station Clock and Timing System All applicable Computer Peripheral Equipment	
	1			Verify output power is applied at the Vehicle Networks Power Panels (L14MO) for the following SDF Auxiliary Power Supplies: 20D100 20D200 23D100 28D100 29D100 LCC 60 CPS GEN MLF 60 CPS GEN 23T100 FREQ. CHANGER	
	2			Verify the following busses are energized at B601-1114A6: 20D131 20D133 20D231 20D233 20D200 Remote Calib.	

REVISIONS			
SYM	DESCRIPTION	DATE	APPROVAL

SEQUENCE	DESCRIPTION	REMARKS
3	Notify the LCC 110A operator to mount the latest Operating System and Test Program tapes and verify when complete.	
4	Execute DCC Remote Load per Verification Procedure 73V1210.	
5	Verify completion of step 4 and that the DDP-224 and LCC 110A are on line.	
6	Verify that the ML Computer Inhibit Switch is in the Inhibit position.	
7	Execute MLC Remote Load per Verification Procedure 73V1209.	
8	Verify completion of step 7 and that the MLC 110A is on line, then execute the following computer on line diagnostics: a. DT01, 73V1218 b. DT02, 73V1219 c. DT04, 73V1220 d. DTSC, 73V1217 e. DESC, 73V1216	
9	Execute Test Program Availability per Procedure 73V1101.	
10	Execute NT99/NT98 per Procedure 73V1201.	
11	Upon completion of step 10, rerun NT99/ NT98 using the SA-503 Action Table patch deck.	
12	Verify the Operating System is in GØ mode, then turn the MLF DDAS Discrete Power Supplies ØN by issuing MDO's 0854, 0856, 0858, 0860.	

REVISIONS			
SYM	DESCRIPTION	DATE	APPROVAL

SEQUENCE	DESCRIPTION	REMARKS
13	Notify all stage test engineers (S-IC, S-II, S-IVB and IU) to power up stages and associated T/M.	
14	Verify completion of step 13 and all stage DDAS DRS's are in sync.	
15	Verify RACS local power for all stages, then have the RACS technician issue a run command for all RACS measurements.	
16	Execute Recovery from Computer Failure per 73V1102.	
17	Verify completion of 73V1102 and that the Computer Systems have been re-initialized and are on line.	
18	Execute the procedures in the order listed on the Verification Schedule.	
	NOTE: The AS-503 Verification Schedule will be supplied prior to the start of verification.	

NOTICE—When Government drawings, specifications, or other data are used for any purpose other than in connection with a definitely related Government procurement operation, the United States Government thereby incurs no responsibility nor obligation whatsoever; and the fact that the Government may have formulated, furnished, or in any way supplied the said drawings specifications or other data is not to be regarded by implication or otherwise as in any manner licensing the holder or any other person or corporation, or conveying any rights or permission to manufacture, use, or sell any patented invention that may in any way be related thereto.

APPLICATION		PART No.	M F	REVISIONS			
NEXT ASSY	USED ON			SYM	DESCRIPTION	DATE	APPROVAL

AS-503

VERIFICATION PROCEDURE

TEST PROGRAM AVAILABILITY

73V1101

UNLESS OTHERWISE SPECIFIED DIMENSIONS ARE IN INCHES TOLERANCES ON: FRACTIONS DECIMALS ANGLES	ORIGINAL DATE OF DRAWING 7/23/68	TEST PROGRAM AVAILABILITY AS-503	GEORGE C. MARSHALL SPACE FLIGHT CENTER NATIONAL AERONAUTICS AND SPACE ADMINISTRATION HUNTSVILLE, ALABAMA
MATERIAL	DRAFTSMAN / CHECKER TRACER / CHECKER ENGINEER / ENGINEER		
HEAT TREATMENT	SUBMITTED P. L. Sutherland P. L. Sutherland		
FINAL PROTECTIVE FINISH	APPROVED Jimmie C. Ash J. C. Ash	SCALE UNIT WT	DWG SIZE A 73V1101 SHEET 1 OF 3

REVISIONS			
SYM	DESCRIPTION	DATE	APPROVAL

1.0 SCOPE

This procedure will verify that test programs and function executors are stored on magnetic tape and can be loaded into 110A high speed memory. It shall not be within the scope of this procedure to see that all test programs can be called from the test tape. The fact that any particular test program can be called from the test tape will be verified as each individual test program is verified.

2.0 APPLICABLE GOVERNMENT FURNISHED DOCUMENTS

2.1 MSFC No. III-4-462-1, User Instructions for Saturn V Launch Computer Complex Operating System and Test Programs Vehicle AS-503, Volume 1, Part 1 - Computer Room.

2.2 MSFC No. III-4-462-1, User Instructions for Saturn V Launch Computer Complex Operating System and Test Programs Vehicle AS-503, Volume 1, Part 2 - Firing Room.

2.3 Operator Reference Manual for SLCC Programming System, MSFC No. III-4-440-5, IBM No. 68-F11-0003, dated 15 June 1968.

3.0 GENERAL NOTES

The test programs will be called up. Each test program called into memory will be cancelled before another test program is called. All function executors will be called before any of them are terminated, and with a test program already loaded. None of the test programs or function executors will be executed.

4.0 PREREQUISITES

4.1 The 110A's loaded with the latest delivered operating system tapes in accordance with IBM Operator's Instructions.

4.2 The DDP-224 computer loaded and the consoles on line.

5.0 PROCEDURE

5.1 Test Program Availability

5.1.1 Depress TYPE pushbutton.

5.1.2 Type in $TPRQXXXX where XXXX is one of the following:

BT01 FT03 FT23 FT43 GT12 MT04 NA03 NTE1

5.1.3 Depress EDIT EXECUTE pushbutton to stack program request.

REVISIONS			
SYM	DESCRIPTION	DATE	APPROVAL

5.1.4 Verify that the request has been stacked, followed a few seconds by a display containing an instruction on program execution.

5.1.5 Depress TYPE pushbutton.

5.1.6 Type in $CNCLXXXX where XXXX is the test program selected in step 5.1.2 above.

5.1.7 Depress EDIT EXECUTE pushbutton.

5.1.8 Verify that a message on program cancellation is received at the display console.

5.1.9 Repeat steps 5.1.1 through 5.1.8 above for the remaining test programs listed in step 5.1.2 above.

NOTE: The programs may be requested in any order.

5.2 Function Executor Availability

5.2.1 Depress TYPE pushbutton.

5.2.2 Type in $TPRQMT01.

5.2.3 Repeat 5.1.3 and 5.1.4 above.

5.2.4 Depress TYPE pushbutton.

5.2.5 Type in $FUNCXXXX where XXXX is one of the following:

GE01 — ME01 — NE97

5.2.6 Depress EDIT EXECUTE pushbutton.

5.2.7 Verify that the function executor is called up.

5.2.8 Repeat 5.2.4 through 5.2.7 above for the remaining function executors listed in step 5.2.5 above.

5.2.9 Depress TYPE pushbutton.

5.2.10 Type in $CNCLMT01.

5.2.11 Depress EDIT EXECUTE pushbutton.

5.2.12 Verify that MT01 is cancelled.

MSFC FORM 422 (VERTICAL) (AUGUST 1960)

NOTICE — When Government drawings, specifications, or other data are used for any purpose other than in connection with a definitely related Government procurement operation, the United States Government thereby incurs no responsibility nor obligation whatsoever; and the fact that the Government may have formulated, furnished, or in any way supplied the said drawings specifications or other data is not to be regarded by implication or otherwise as in any manner licensing the holder or any other person or corporation, or conveying any rights or permission to manufacture, use, or sell any patented invention that may in any way be related thereto.

APPLICATION		PART No.	M F	REVISIONS			
NEXT ASSY	USED ON			SYM	DESCRIPTION	DATE	APPROVAL

AS-503

VERIFICATION TEST PROCEDURE

RECOVERY FROM COMPUTER FAILURE

73V1102

UNLESS OTHERWISE SPECIFIED DIMENSIONS ARE IN INCHES TOLERANCES ON: FRACTIONS DECIMALS ANGLES	ORIGINAL DATE OF DRAWING 7/23/68 DRAFTSMAN / CHECKER TRACER / CHECKER ENGINEER / ENGINEER SUBMITTED P. L. Sutherland P. L. Sutherland APPROVED J. C. Ash J. C. Ash	RECOVERY FROM COMPUTER FAILURE AS-503	GEORGE C. MARSHALL SPACE FLIGHT CENTER NATIONAL AERONAUTICS AND SPACE ADMINISTRATION HUNTSVILLE, ALABAMA
MATERIAL		SCALE	DWG SIZE A — 73V1102
HEAT TREATMENT		UNIT WT	SHEET 1 OF 5
FINAL PROTECTIVE FINISH			

REVISIONS			
SYM	DESCRIPTION	DATE	APPROVAL

1.0 SCOPE

This procedure will verify the capability of the Discrete Initialization Program (NT98) to recover from a computer failure.

2.0 APPLICABLE GOVERNMENT FURNISHED DOCUMENTS

2.1 Operator Reference Manual for SLCC Programming System, MSFC No. III-4-440-5, IBM No. 68-F11-0003, dated 15 June 1968.

2.2 MSFC No. 888-4-440-4, Specifications for the Operating System for the Saturn V Launch Computer Complex, Volume 1, Revision 1.

3.0 GENERAL NOTES

The computer system will be brought on line and placed in the GO mode. All stage ESE equipment will be powered up. Switch action will be stopped and the 110A computers will then be brought back on line. The status of all discretes will be checked in a general manner to determine that the status after recovery is the same as that prior to failure. The detection of an MTOAD condition will be verified.

4.0 PREREQUISITES

4.1 The 110A computers loaded with the latest delivered IBM operating system tapes in accordance with IBM Operator's Instructions.

4.2 The DEE-6 on line and all DEE printers ON.

4.3 The DDP-224 computer loaded and the display consoles on line.

4.4 Verify that NT99 has been successfully executed.

4.4.1 Computer system in the GO mode.

4.5 The following auxiliary power equipment ON:

20D100 Power Supply
20D200 Power Supply
28D100 Power Supply
LCC MG Set
23D100 Power Supply
MLF MG Set
Frequency Changer

REVISIONS			
SYM	DESCRIPTION	DATE	APPROVAL

4.6 All DDAS equipment in the LCC and MLF ON. All DRS's in the RECEIVE mode. The CIU in COMPUTER mode.

5.0 PROCEDURE

5.1 MLF MG Set Shutdown

5.1.1 Verify that S-IC, S-II, S-IVB, and IU power is ON.

5.1.2 Run NT98, READ DCE option, and place the Computer System in the GO mode in accordance with step 1.1 of Section 1 of the IBM User's Manual.

5.1.3 Set the tabs on all panel lamps in the LCC.

5.1.4 Mark the DEE-6C and 110A print outs as follows:

BEGIN MLF MG SET INPUT POWER FAILURE TEST

5.1.5 With the MLF MG set OUTPUT POWER still ON, press the STOP button.

5.1.6 Check with the computer personnel to determine that there has been a power failure.

5.1.6.1 Check tabs on all panels for changes.

5.1.6.2 Place MLF DCE equipment in MANUAL MODE at B601-154A1A11.

5.1.7 Check with the MLF Computer personnel and then bring the MLF MG set back on line.

5.1.8 Reload the 110A's in accordance with instructions in the IBM Operator's Instructions.

5.1.8.1 Execute NT99 in accordance with IBM User's Instruction, paragraph 1.2.

5.1.9 Run NT98, READ DCE option, and place the computer system in the GO mode in accordance with step 1.1 of section 1 of the IBM User's Manual.

5.1.9.1 Check tabs on all panels for changes.

5.1.10 Mark the DEE-6C and 110A printouts as follows:

END MLF MG SET INPUT POWER FAILURE TEST

5.1.11 Make a visual check of the SDF hardware and check the DEE-6C and 110A printouts. Analyze the changes in discrete status, if any, that took place during the computer failure and write the results in the SDF test log.

REVISIONS			
SYM	DESCRIPTION	DATE	APPROVAL

MTOAD DETECTED DURING DCE READ
(See step 1.1.4.2 of Section 1
of the IBM User's Manual.)

5.3.7 Clear the MTOAD.

5.3.8 Repeat step 5.3.2 above.

5.3.8.1 Place LDO inhibit switch to ON.

5.3.8.2 Repeat step 5.3.2 above.

5.3.9 Verify that the following message is displayed:

NT98 LDO MTOAD OR LDO INHIBIT SWITCH ON

5.3.10 Place the LDO INHIBIT switch OFF and the MLC COMPUTER INHIBIT switch to AUTO.

5.3.11 Repeat step 5.3.2 above.

5.3.12 Verify that the following message is displayed:

THE MLC COMPUTER INHIBIT SWITCH IS OFF.
(See step 1.1.4.2 of section 1 of the
IBM User's Manual) Enter A to TERMINATE,
Enter B to RESTART, Enter LETTER OF
Desired Option

5.3.13 Place the MLC COMPUTER INHIBIT switch to INHIBIT.

5.3.14 Enter Option b.

5.3.15 Perform step 1.1.2 of section 1 of the IBM User's Manual, selecting initial option $P2.

5.3.16 Select secondary options 2 and 3.

NOTICE — When Government drawings, specifications, or other data are used for any purpose other than in connection with a definitely related Government procurement operation, the United States Government thereby incurs no responsibility nor obligation whatsoever; and the fact that the Government may have formulated, furnished, or in any way supplied the said drawings specifications or other data is not to be regarded by implication or otherwise as in any manner licensing the holder or any other person or corporation, or conveying any rights or permission to manufacture, use, or sell any patented invention that may in any way be related thereto.

APPLICATION		PART No.	M F	REVISIONS			
NEXT ASSY	USED ON			SYM	DESCRIPTION	DATE	APPROVAL

AS-503

VERIFICATION PROCEDURE

DISCRETE INITIALIZATION AND MODIFICATION (NT98/NT99)

73V1201

UNLESS OTHERWISE SPECIFIED DIMENSIONS ARE IN INCHES TOLERANCES ON: FRACTIONS DECIMALS ANGLES	ORIGINAL DATE OF DRAWING 7/23/68	DISCRETE INITIALIZATION AND MODIFICATION (NT98/ NT99)	GEORGE C. MARSHALL SPACE FLIGHT CENTER NATIONAL AERONAUTICS AND SPACE ADMINISTRATION HUNTSVILLE, ALABAMA	
MATERIAL	DRAFTSMAN / CHECKER TRACER / CHECKER ENGINEER / ENGINEER			
HEAT TREATMENT	SUBMITTED P. SUTHERLAND			
FINAL PROTECTIVE FINISH	APPROVED J. C. ASH	SCALE UNIT WT	DWG SIZE A	73V1201 SHEET 1 OF 5

REVISIONS			
SYM	DESCRIPTION	DATE	APPROVAL

1.0 SCOPE

This procedure will verify the Discrete Initialization and Modification Program (NT98/NT99).

2.0 APPLICABLE GOVERNMENT FURNISHED DOCUMENTS

2.1 Operator Reference Manual for SLCC Programming System, MSFC No. III-4-440-5, IBM No. 68-F11-003, dated 15 June 1968.

2.2 MSFC No. 888-4-440-4, Specification for the Operating System for the Saturn V Launch Computer Complex, Volume 1, Revision 1.

3.0 GENERAL NOTES

The steps in 1.1 of Section 1 of the IBM User's Manual will be followed to check NT98 and the steps in 1.2 of Section 1 will be followed to check NT99.

4.0 PREREQUISITES

4.1 All stage power supplies OFF, and facility power circuit breakers to stage power supplies OPEN.

4.2 The four MDO patchboards removed from B202-1131A1A1, A2A1, A3A1 and A4A1.

4.3 The 110A's loaded with the AS-503 tapes in accordance with the IBM computer Operator Instuctions.

4.4 The DDP-224 Computer loaded and display consoles on line.

4.5 The following auxiliary power supplies and their associated busses ON:

20D141 and 20D161
20D200
28D100
29D100
23D100

5.0 PROCEDURE

5.1 Discrete Initialization

5.1.1 Place switches S7 and S15 on the S-IVB Propellant Monitor Panel B601-406A8 to boost close.

REVISIONS			
SYM	DESCRIPTION	DATE	APPROVAL

5.1.2 Perform step 1.1.1 of section 1 of the IBM User's Manual.

5.1.3 Perform step 1.1.2 of section 1 of the IBM User's Manual, selecting initial option $P1.

5.1.4 Perform step 1.1.3 of section 1 of the IBM User's Manual, selecting secondary option 1.

5.1.5 Verify that both printout and display list MDØ0634F and MDØ0638F (others may also be listed).

5.1.6 Verify that erroneous MDO's can be resolved by changing the corresponding LDI switch positions and noting that the MDO's are eliminated from the display.

5.1.7 Perform secondary options 2 and 3 of step 1.1.2d of section 1 of the IBM User's Manual.

5.1.8 Place the MLC COMPUTER INHIBIT switch to INHIBIT.

5.1.9 Place switches S7 and S15 on the S-IVB Propellant Monitor Panel B601-406A8 to boost close.

5.1.10 Perform step 1.1.1 of section 1 of the IBM User's Manual.

5.1.11 Perform step 1.1.2 of section 1 of the IBM User's Manual, selecting initial option $P0.

5.1.12 Perform step 1.1.3 of section 1 of the IBM User's Manual, selecting secondary option 1.

5.1.13 Verify that both printout and display list MDØ0634F and MDØ0638F (others may also be listed).

5.1.14 Verify that erroneous MDO's can be resolved by changing the corresponding LDI switch positions and noting that the MDO's are eliminated from the display.

5.1.15 Perform secondary options 2 & 3 of step 1.1.2 of section 1 of the IBM User's Manual.

5.1.16 Place the MLC COMPUTER INHIBIT switch to INHIBIT.

5.1.17 Place the MLF DCE in MANUAL mode, issue MDO 0609 ON, and place the MLF DCE in the COMPUTER mode.

5.1.18 Perform step 1.1.1 of section 1 of the IBM User's Manual.

5.1.19 Perform step 1.1.2 of section 1 of the IBM User's Manual, selecting initial option $P2.

REVISIONS			
SYM	DESCRIPTION	DATE	APPROVAL

5.1.20 Perform step 1.1.3 of section 1 of the IBM User's Manual, selecting secondary option 1.

5.1.21 Verify that MDO 0609 is displayed as ON.

5.1.22 Perform step 1.1.3 of section 1 of the IBM User's Manual, selecting secondary option 2.

5.1.23 Perform step 1.1.3 on section 1 of the IBM User's Manual, selecting secondary option 3.

5.1.24 Place the MLF DCE in MANUAL mode, issue MDO 0609 OFF, and place the MLF DCE in the computer mode.

5.2 Discrete Modification

5.2.1 Place the MLC COMPUTER INHIBIT switch to INHIBIT.

5.2.2 Place cards in the card reader to perform the following action table modification:

MDI 0010 ON - LDØ 1200 issued ON
MDI 1200 ON - LDØ 0010 issued ON
LDI 0033 ON - MDØ 0619 issued ON
LDI 0619 ON - MDØ 0033 issued ON

5.2.3 Perform steps 1.2.1 and 1.2.2 of section 1 of the IBM User's Manual.

5.2.4 Place the MLC COMPUTER INHIBIT switch to AUTO.

5.2.5 At the MLF ComputerInput Signal Conditioner B202-1130A1A2, turn ON MDI 0010 (Test Switch 31).

5.2.6 At a Display Console sense for LDØ 1200 and LDØ 0010, verify that LDØ 1200 is ON and LDØ 0010 is OFF.

5.2.7 Turn OFF MDI 0010 at the MLF Computer Signal Conditioning Equipment.

5.2.8 At a Display Console sense to verify LDØ 1200 is OFF.

5.2.9 Repeat steps 5.2.5 through 5.2.8 above as applicable to MDI 1200 and LDØ 0010. MDI 1200 is turned ON by S19 of B202-1130A4A2.

5.2.10 At the LCC Computer Input Signal Conditioner B601-1130A1A2 turn ON LDI 0033 (test switch 32).

5.2.11 At a Display Console sense to verify MDØ 0619 is ON and MDØ 0033 is OFF.

REVISIONS			
SYM	DESCRIPTION	DATE	APPROVAL

5.2.12 Turn OFF LDI 0033 at the LCC Computer Signal Conditioning Equipment.

5.2.13 At a Display Console sense to verify MDØ 0619 is OFF.

5.2.14 Repeat steps 5.3.10 through 5.3.13 above as applicable to LDI 0619 and MDØ 0033. LDI 0619 is turned ON by S9 of B601-1130A4A2.

5.2.15 Place the MLC COMPUTER INHIBIT switch to INHIBIT.

5.2.16 Place cards in the card reader to perform the following action table modification:

MDI 0010 ON - LDØ 0010 issued ON
MDI 1200 ON - LDØ 1200 issued ON
LDI 0033 ON - MDØ 0033 issued ON
LDI 0619 ON - MDØ 0619 issued ON

5.2.17 Perform steps 1.2.1 and 1.2.2 of section 1 of the IBM User's Manual.

5.2.18 Place the MLC COMPUTER INHIBIT switch to AUTO.

5.2.19 Repeat steps 5.2.5 through 5.2.15 as applicable to MDI 0010, MDI 1200, LDI 0033, and LDI 0619.

MSFC FORM 422 (VERTICAL) (AUGUST 1960)

NOTICE — When Government drawings, specifications, or other data are used for any purpose other than in connection with a definitely related Government procurement operation, the United States Government thereby incurs no responsibility nor obligation whatsoever; and the fact that the Government may have formulated, furnished, or in any way supplied the said drawings specifications or other data is not to be regarded by implication or otherwise as in any manner licensing the holder or any other person or corporation, or conveying any rights or permission to manufacture, use, or sell any patented invention that may in any way be related thereto.

APPLICATION		PART No.	M F	REVISIONS			
NEXT ASSY	USED ON			SYM	DESCRIPTION	DATE	APPROVAL

AS-503

VERIFICATION PROCEDURE

TEST PROGRAM CONTROL (ET01)

73V1202

UNLESS OTHERWISE SPECIFIED DIMENSIONS ARE IN INCHES TOLERANCES ON: FRACTIONS DECIMALS ANGLES	ORIGINAL DATE OF DRAWING 7/22/68 DRAFTSMAN / CHECKER TRACER / CHECKER ENGINEER / ENGINEER	TEST PROGRAM CONTROL (ET01) AS-503	GEORGE C. MARSHALL SPACE FLIGHT CENTER NATIONAL AERONAUTICS AND SPACE ADMINISTRATION HUNTSVILLE, ALABAMA
MATERIAL	SUBMITTED P. L. Sutherland P. SUTHERLAND		
HEAT TREATMENT			
FINAL PROTECTIVE FINISH	APPROVED J. C. Ash J. C. ASH	SCALE / UNIT WT	DWG SIZE A 73V1202 SHEET 1 OF 4

REVISIONS			
SYM	DESCRIPTION	DATE	APPROVAL

1.0 SCOPE

This procedure will verify the Test Program Control program (ET01)

2.0 APPLICABLE GOVERNMENT FURNISHED DOCUMENTS

2.1 Operator Reference Manual For SLCC Programming System, MSFC No. III-4-440-5, IBM No. 68-F11-0003, dated 15 June 1968

2.2 MSFC No. 888-4-440-4, Specification for the Operating System for the Saturn V Launch Computer Complex, Volume 1, Revision 1.

3.0 GENERAL NOTES

The commands which are acceptable to Test Program Control will be entered. Each command will be entered as normally used. Some commands will be entered when an error message shall be the response.

4.0 PREREQUISITES

4.1 The 110A computers loaded with the latest delivered in accordance with the IBM Operator's Instructions.

4.2 Display System Consoles on line.

4.3 The computer system in the GO mode.

4.4 All stages powered up.

4.5 RACS equipment powered up.

4.6 All MLF DDAS equipment on line.

REVISIONS			
SYM	DESCRIPTION	DATE	APPROVAL

5.0 PROCEDURE

5.1 Refer to step 2.0 of section 1 of the IBM User's Manual and enter $TPRQMT01.

5.2 Verify that the message displayed is as listed in step 2.2 of section 1 of the IBM User's Manual.

5.3 Enter $CNCLMT01.

5.4 Verify that the message displayed is as listed in step 2.2 of section o of the IBM User's Manual.

5.5 Call up and execute test program MT01.

5.6 Whilte MT01 is running enter $TERMMT01.

5.7 Verify that the message displayed is as listed in step 2.2 of section 1 of the IBM User's Manual.

5.8 Enter request for MT01 and several other test program until the following message is received:

STACK FULL, THIS REQUEST NO ACCEPTED

5.9 Enter request $LIST and check the list of test programs against those requested in 5.8 above.

5.9.1 Enter $TEND01 and verify all request programs cancelled.

5.10 Request $TPRQMT04, $TPRQNT98, $TPRQMT01 from Console 1.

5.10.1 After MT01 is ready to execute enter $TNXTMT01.

5.10.2 Enter $CNCLMT01.

5.10.3 Verify MT01 is the next program ready for execution is MT01.

5.10.4 Enter $TEND01.

5.11 From console #1 enter $THLD.

5.12 Request MT01 from all consoles. Verify that no processing takes place.

5.13 From console #1 enter $TREL.

5.14 Enter request for MT01 from console #2 and verify that MT01 is loaded.

5.15 From console #1 enter $TEND02.

REVISIONS			
SYM	DESCRIPTION	DATE	APPROVAL

5.0 PROCEDURE (continued)

5.16 Verify that MT01 is cancelled.

5.17 Enter $TPRQTM01 from console #1. The following message should be received:

TM01
PROGRAM CANCELLED, UNABLE TO LOAD

MSFC FORM 422 (VERTICAL) (AUGUST 1960)

NOTICE — When Government drawings, specifications, or other data are used for any purpose other than in connection with a definitely related Government procurement operation, the United States Government thereby incurs no responsibility nor obligation whatsoever; and the fact that the Government may have formulated, furnished, or in any way supplied the said drawings specifications or other data is not to be regarded by implication or otherwise as in any manner licensing the holder or any other person or corporation, or conveying any rights or permission to manufacture, use, or sell any patented invention that may in any way be related thereto.

APPLICATION		PART No.	M F	REVISIONS			
NEXT ASSY	USED ON			SYM	DESCRIPTION	DATE	APPROVAL

AS-503

VERIFICATION PROCEDURE

FUNCTION EXECUTOR (EDLN)

73V1203

UNLESS OTHERWISE SPECIFIED DIMENSIONS ARE IN INCHES TOLERANCES ON: FRACTIONS DECIMALS ANGLES	ORIGINAL DATE OF DRAWING 7/23/8	FUNCTION EXECUTOR (EDLN) AS-503	GEORGE C. MARSHALL SPACE FLIGHT CENTER NATIONAL AERONAUTICS AND SPACE ADMINISTRATION HUNTSVILLE, ALABAMA
MATERIAL	DRAFTSMAN / CHECKER		
	TRACER / CHECKER		
HEAT TREATMENT	ENGINEER / ENGINEER		
FINAL PROTECTIVE FINISH	SUBMITTED P. SUTHERLAND APPROVED J. C. ASH	SCALE UNIT WT	DWG SIZE A 73V1203 SHEET 1 OF 4

REVISIONS			
SYM	DESCRIPTION	DATE	APPROVAL

1.0 SCOPE

This procedure will verify the Function Executor program (EDLN).

2.0 APPLICABLE GOVERNMENT FURNISHED DOCUMENTS

2.1 Operator Reference Manual for SLCC Programming System, MSFC No. III-4-440-5, IBM No. 68-F11-0003, dated 15 June

2.2 MSFC No. 888-4-440-4, Specification for the Operating System for the Saturn V Launch Computer Complex, Volume 1, Revision 1.

3.0 GENERAL NOTES

A function executor will be called up. The request to verify that the program is executing will be entered. The function executor will then be cancelled.

4.0 PREREQUISITES

4.1 The 110A computers loaded with the latest delivered tapes in accordance with the IBM User's Manual.

4.2 Display System Consoles on line.

4.3 The computer system in the GO mode.

4.4 All stages powered up.

4.5 All RACS equipment powered up.

4.6 All MLF DDAS equipment on line.

5.0 PROCEDURE

5.1 Execution, Verification and Termination.

REVISIONS			
SYM	DESCRIPTION	DATE	APPROVAL

5.0 PROCEDURE (continued)

5.1.1 Refer to step 3.1 of section 1 of the IBM User's Manual and enter at console #1 a request for function executor GE01 to be executed one time only.

5.1.2 Refer to step 3.3 of section 1 of the IBM User's Manual and verify that GE01 is being executed one time.

5.1.3 Repeat step 5.1.1 above, but request the execution of GE01 every ten seconds.

5.1.4 Refer to step 3.3 of section 1 of the IBM User's Manual and verify that GE01 is being executed every ten seconds.

5.1.5 Refer to step 3.2 of section 1 of the IBM User's Manual and terminate GE01.

5.1.6 Refer to step 3.3 of section 1 of the IBM User's Manual and verify that no function executor is being executed.

5.2 RESPONSE MESSAGES

5.2.1 Refer to step 3.1 of section 1 of the IBM User's Manual and enter at console #1 a request to execute every 25 seconds the following function executors:

GE01 NE97
BE01

5.2.2 From another console enter request for execution of function executor GE01 every 30 seconds. The following message should be displayed:

THIS ROUTINE BEING EXECUTED
BY ANOTHER CARD KEY.
THIS REQUEST NOT HONORED FUNCGE01

5.2.3 Refer to step 3.2 of section 1 of the IBM User's Manual and terminate the following:

GE01 NE01 NE97
GE02 BE01

REVISIONS			
SYM	DESCRIPTION	DATE	APPROVAL

5.0 PROCEDURE (continued)

5.2.4 From console #1 call up function executor EM01. The following message should be displayed:

REQUEST INVALID, NOT DEFINED IN
F. E. TABLE.

5.2.5 At console #1 key in $FUNTME01. The following message should be displayed:

ROUTINE NOT ACTIVE, COMMAND
INVALID FUNTME01

5.2.6 At console #1 key in $FUNCGE01/010 and after execution begins key in $FUNCGE01/025. The following message should be displayed:

MODE OF EXECUTION OF ROUTINE
BEING ALTERED GE01

NOTICE — When Government drawings, specifications, or other data are used for any purpose other than in connection with a definitely related Government procurement operation, the United States Government thereby incurs no responsibility nor obligation whatsoever; and the fact that the Government may have formulated, furnished, or in any way supplied the said drawings specifications or other data is not to be regarded by implication or otherwise as in any manner licensing the holder or any other person or corporation, or conveying any rights or permission to manufacture, use, or sell any patented invention that may in any way be related thereto.

APPLICATION		PART No.	M F	REVISIONS			
NEXT ASSY	USED ON			SYM	DESCRIPTION	DATE	APPROVAL

AS-503

VERIFICATION PROCEDURE

DISPLAY MONITOR (DMON)

73V1204

UNLESS OTHERWISE SPECIFIED DIMENSIONS ARE IN INCHES TOLERANCES ON: FRACTIONS DECIMALS ANGLES	ORIGINAL DATE OF DRAWING 7/23/68	DISPLAY MONITOR (DMON) AS-503	GEORGE C. MARSHALL SPACE FLIGHT CENTER NATIONAL AERONAUTICS AND SPACE ADMINISTRATION HUNTSVILLE, ALABAMA	
MATERIAL	DRAFTSMAN / CHECKER			
HEAT TREATMENT	TRACER / CHECKER			
FINAL PROTECTIVE FINISH	ENGINEER / ENGINEER			
	SUBMITTED P. L. Sutherland P. SUTHERLAND			
	APPROVED J. C. Ash J. C. ASH	SCALE UNIT WT	DWG SIZE A	73V1204 SHEET 1 OF 5

REVISIONS			
SYM	DESCRIPTION	DATE	APPROVAL

1.0 SCOPE

This procedure will verify the Display Monitor Program (DMON)

2.0 APPLICABLE GOVERNMENT FURNISHED DOCUMENTS

2.1 Operator Reference Manual for
SLCC Programming System
MSFC NO. III-4-440-5, IBM NO.
68-F11-0003, dated 15 June 1968.

2.2 MSFC No. 888-4-440-4, Specification for the Operating System for the Saturn V Launch Computer Complex, Volume 1, Revision 1.

3.0 GENERAL NOTES

The Display Monitor program will be verified by introducing the following signals and monitoring them on the display console:

LDI, MDI, DDAS Discrete, DDAS Analog, Hardware Analog and Predefined Display Monitor Items.

4.0 PREREQUISITES

4.1 Both 110A's loaded with the latest delivered IBM operating system tapes in accordance with IBM Operator's Instruction.

4.2 The DDP-224 and display consoles brought on line.

4.3 Discrete Initialization Program (NT98) has been executed and system is in GO mode.

4.4 Ground power up for all stages.

4.5 MLF and LCC DDAS powered up and operating.

5.0 PROCEDURE

5.1 Montior LDI Discrete

5.1.1 Depress TYPE and key in the following:

$DMON

NOTE:

During execution all spaces must be made with CURSOR (Not space bar).

REVISIONS			
SYM	DESCRIPTION	DATE	APPROVAL

5.1.2 Move the CURSOR and key in the following:

P1ƀƀLDI0346 (ƀ = CURSOR)

5.1.3 Depress EDIT EXECUTE

5.1.4 Turn on ground camera arm switch on vehicle camera networks panel

5.1.5 Verify that the following is displayed:

P1 ON

5.1.6 Depress TYPE and key in the following:

$DMON

5.1.7 Move the CURSOR and key in the following:

P2ƀƀLDI0346

5.1.8 Depress EDIT EXECUTE

5.1.9 Turn ground camera arm switch to OFF

5.1.10 Verify that the following is displayed:

P2 OFF

5.2 Monitor MDI Discrete

5.2.1 Depress TYPE and key in the following:

$DMON

5.2.2 Move the CURSOR and key in the following:

P3ƀƀMDI0459

5.2.3 Depress EDIT EXECUTE

5.2.4 Turn ground camera arm switch on vehicle camera networks panel

5.2.5 Verify that the following is displayed:

P3 ON

5.2.6 Turn ground camera switch OFF

5.2.7 Verify that the following is displayed:

P3 OFF

REVISIONS			
SYM	DESCRIPTION	DATE	APPROVAL

5.3 Monitor DDAS Discrete

5.3.1 Depress TYPE and key in the following:

$DMON

5.3.2 Move the CURSOR and key in the following:

P4ØØDP1A1-01R02-05

5.3.3 Depress EDIT EXECUTE

5.3.4 Verify that the LCC DDAS Computer Interface Unit is in COMPUTER mode.

5.3.5 Place the LCC IU DRS, B601-1459, in SIMULATE mode and set up the following address on the Digital Signal Simulator Panel: A1-01R02-05

5.3.6 Verify that the following is displayed:

P4 ON

5.4 Monitor DDAS Analog

5.4.1 Depress TYPE and key in the following:

$DMON

5.4.2 Move the CURSOR and key in the following:

P5ØØDP1A1-05-04-00/5/0

5.4.3 Depress EDIT EXECUTE.

5.4.4 Set up the following address on the Digital Signal Simulator Panel of the IU DRS:

A1-05-04-00

5.4.5 Verify that a value between 0.0 and 5.0 is displayed.

5.5 Monitor Hardwire Analog

REVISIONS			
SYM	DESCRIPTION	DATE	APPROVAL

5.5.1 Depress TYPE and key in the following:

$DMON

5.5.2 Move the CURSOR and key in the following:

P6ØØM351/14.3/11.7

5.5.3 Depress EDIT EXECUTE

5.5.4 Verify that a value between 11.7 and 14.3 is displayed

5.6 Monitor Slide Display

5.6.1 Depress the SLIDE SELECT pushbutton.

5.6.2 Enter the number 128.

5.6.3 Depress EXECUTE and verify that a group of rings shows up on the display console screen.

5.7 Monitor Format Display

5.7.1 Depress the FORMAT SELECT pushbutton.

5.7.2 Enter the correct number to select the desired format.

5.7.3 Depress EXECUTE and verify that the format displayed on the console screen is the desired one.

MSFC FORM 422 (VERTICAL) (AUGUST 1960)

NOTICE—When Government drawings, specifications, or other data are used for any purpose other than in connection with a definitely related Government procurement operation, the United States Government thereby incurs no responsibility nor obligation whatsoever; and the fact that the Government may have formulated, furnished, or in any way supplied the said drawings specifications or other data is not to be regarded by implication or otherwise as in any manner licensing the holder or any other person or corporation, or conveying any rights or permission to manufacture, use, or sell any patented invention that may in any way be related thereto.

APPLICATION		PART No.	M F	REVISIONS			
NEXT ASSY	USED ON			SYM	DESCRIPTION	DATE	APPROVAL

AS-503

VERIFICATION PROCEDURE

DISCRETE DISPLAY SERVICE (ALNA)

73V1205

UNLESS OTHERWISE SPECIFIED DIMENSIONS ARE IN INCHES TOLERANCES ON: FRACTIONS DECIMALS ANGLES	ORIGINAL DATE OF DRAWING 7/23/68 DRAFTSMAN / CHECKER TRACER / CHECKER ENGINEER / ENGINEER	DISCRETE DISPLAY SERVICE (ALNA) AS-503	GEORGE C. MARSHALL SPACE FLIGHT CENTER NATIONAL AERONAUTICS AND SPACE ADMINISTRATION HUNTSVILLE, ALABAMA
MATERIAL	SUBMITTED P. L. Sutherland P. SUTHERLAND		
HEAT TREATMENT			
FINAL PROTECTIVE FINISH	APPROVED J. C. Ash J. C. ASH	SCALE / UNIT WT	DWG SIZE A 73V1205 SHEET 1 OF 6

REVISIONS			
SYM	DESCRIPTION	DATE	APPROVAL

1.0 SCOPE

This procedure will verify the Discrete Display Service (ALNA) program.

2.0 APPLICABLE GOVERNMENT FURNISHED DOCUMENTS

2.1 Operator Reference Manual for SLCC Programming System, MSFC No. III-4-440-5, IBM No. 68-F11-0003, dated 15 June 1968

2.2 MSFC No. 888-4-440-4, Specification for the Operating System for the Saturn V Launch Computer Complex, Volume 1, Revision 1.

3.0 GENERAL NOTES

The Discrete Display Service will be verified by ascertaining that the following operations can be successfully executed from the display console: issue discretes, discrete status check, issue switch selector code, ACE data link initialization and control of modes of operation.

4.0 PREREQUISITES

4.1 Both 110A's loaded with the latest delivered IBM operating system tape.

4.2 The Display System and the 110A's brought on-line.

4.3 Ground power up for all stages.

4.4 MLF and LCC DDAS powered up and operating.

REVISIONS			
SYM	DESCRIPTION	DATE	APPROVAL

5.0 PROCEDURES

5.1 Issure Discretes

5.1.1 Depress TYPE and key in the following:

$LDØN1133

5.1.2 Depress EDIT EXECUTE

5.1.3 One of the following messages will be displayed:

XXXX	INVALID
XXXX	DISALLOWED
XXXX	DO FAILURE
XXXX	DRUM FAILED
XXXX	DL FAILED
XXXX	INHIBITED
XXXX	ISSUED
XXXX	SYS IN IDLE

(XXXX = parameter received from the keyboard)

5.1.4 Verify that the message is LDO1133 ISSUED, and that DS25 on S-II Engine No. 201 Panel, B601-206A1, is ON.

To retry a request, repeat the above procedure starting with step 5.1.1

5.1.5 Depress TYPE and key in the following:

$LDØF1133

5.1.6 Repeat step 5.1.3

5.1.8 Verify that the message is LDØ1133 ISSUED, and that DS25 on S-II Engine No. 201 Panel is OFF.

5.1.9 Depress TYPE and key in the following:

$MDØF0854

5.1.10 Depress EDIT EXECUTE

5.1.11 Repeat step 5.1.3

REVISIONS			
SYM	DESCRIPTION	DATE	APPROVAL

5.1.12 Verify that the message is MDØ0854 ISSUED, and that DDAS Discrete Signal Conditioner power supply B201-1132A1A1 is OFF.

5.1.13 Depress TYPE and key in the following:

$MDØN0854

5.1.14 Depress EDIT EXECUTE

5.1.15 Repeat step 5.1.3

5.1.16 Verify that the message is MDØ0854 ISSUED, and that DDAS Discrete Signal Conditioner Power Supply B201-1132A1A1 is ON.

5.2 Discrete Status Check

5.2.1 Depress TYPE and key in the following:

$SLDI1357

5.2.2 Depress EDIT EXECUTE

5.2.3 One of the following messages will be displayed:

YYYY	INVALID
YYYY	DL FAILED
YYYY	ON
YYYY	OFF

(YYYY = parameter received from the keyboard)

5.2.4 Depress TYPE and key in the following:

$SLDØ1234

5.2.5 Depress EDIT EXECUTE

5.2.6 Repeat step 5.2.3

5.2.7 Depress TYPE and key in the following:

$SMDI12468

5.2.8 Depress EDIT EXECUTE

5.2.9 Repeat step 5.2.3

REVISIONS			
SYM	DESCRIPTION	DATE	APPROVAL

5.2.10 Depress TYPE and key in the following:

$SMDØ0123

5.2.11 Depress EDIT EXECUTE

5.2.12 Repeat Step 5.2.3

5.3 Issure Switch Selector Code

5.3.1 Verify that switch S29 on the IU Measuring and Tracking panel (601-611A1) is in the AUTO position.

5.3.2 Depress TYPE and key in the following:

$MSIU039Y

5.3.3 Depress EDIT EXECUTE

5.3.4 One of the following messages will be displayed:

ZZZZ	SL FAILED
ZZZZ	DL FAILED
ZZZZ	DRUM FAILED
ZZZZ	INVALID
ZZZZ	INHIBITED
ZZZZ	ENVIRONMENT
ZZZZ	ISSUED

(ZZZZ = parameter received from the keyboard)

5.3.5 Verify that the message is ZZZZ ISSUED, and that the TAPE RECORDER RECORD light (DS25) on 601-611A1 panel is lit.

5.3.6 Depress TYPE and key in the following:

$MSIU017

5.3.7 Depress EDIT EXECUTE

5.3.8 Repeat step 5.3.4

5.3.9 Verify that the message is ZZZZ ISSUED, and that the TAPE RECORDER RECORD light (DS25) is OFF.

REVISIONS			
SYM	DESCRIPTION	DATE	APPROVAL

5.4 ACE Data Link Initialization

5.4.1 Depress TYPE and key in the following:

$ACEI

5.4.2 Depress EDIT EXECUTE

5.4.3 One of the following messages will be displayed:

QQQQ	DL FAILED
QQQQ	ISSUED

(QQQQ = parameter received from the keyboard)

5.5 Display Status of EDS Discrete Table

5.5.1 Depress TYPE and key in the following:

$ACEL

5.5.2 Depress EDIT EXECUTE

5.5.3 The program will display the status of the EDS Discrete Table.

5.5.4 One of the following messages may be displayed:

RRRR	DL FAILED
RRRR	ISSUED

(RRRR = parameter received from the keyboard)

5.6 Modes of Operation

Perform paragraph 5.5 on pages 5-4 and 5-5/5-6 of section 1 of the IBM User Instruction.

MSFC FORM 422 (VERTICAL) (AUGUST 1960)

NOTICE — When Government drawings, specifications, or other data are used for any purpose other than in connection with a definitely related Government procurement operation, the United States Government thereby incurs no responsibility nor obligation whatsoever; and the fact that the Government may have formulated, furnished, or in any way supplied the said drawings specifications or other data is not to be regarded by implication or otherwise as in any manner licensing the holder or any other person or corporation, or conveying any rights or permission to manufacture, use, or sell any patented invention that may in any way be related thereto.

APPLICATION		PART No.	M F	REVISIONS			
NEXT ASSY	USED ON			SYM	DESCRIPTION	DATE	APPROVAL

AS-503

VERIFICATION PROCEDURE

SYSTEM MESSAGE (SMSC)

73V1206

UNLESS OTHERWISE SPECIFIED DIMENSIONS ARE IN INCHES TOLERANCES ON: FRACTIONS DECIMALS ANGLES	ORIGINAL DATE OF DRAWING 7/23/68 DRAFTSMAN / CHECKER TRACER / CHECKER ENGINEER / ENGINEER	SYSTEM MESSAGE (SMSC) AS-503	GEORGE C. MARSHALL SPACE FLIGHT CENTER NATIONAL AERONAUTICS AND SPACE ADMINISTRATION HUNTSVILLE, ALABAMA
MATERIAL	SUBMITTED P. L. Sutherland P. SUTHERLAND		
HEAT TREATMENT			
FINAL PROTECTIVE FINISH	APPROVED J. C. Ash J. C. ASH	SCALE UNIT WT	DWG SIZE A 73V1206 SHEET 1 OF 3

REVISIONS			
SYM	DESCRIPTION	DATE	APPROVAL

1.0 SCOPE

This procedure will verify the System Message program (SMSG).

2.0 APPLICABLE GOVERNMENT FURNISHED DOCUMENTS

2.1 Operator Reference Manual for SLCC Programming System, MSFC No. III-4-440-5, IBM No. 68-F11-0003, dated 15 June 1968.

2.2 MSFC No. 888-4-440-4, Specification for the Operating System for the Saturn V Launch Computer Complex, Volume 1, Revision 1.

3.0 GENERAL NOTES

The request will be keyed in to slow the rate at which an error message is displayed. After verification of a slower rate, the request will be keyed in to return the display rate to normal.

4.0 PREREQUISITES

4.1 The 110A computers loaded with the latest delivered tapes in accordance with the IBM Operator's Instructions.

4.2 The Display System consoles on line.

4.3 The computer system in the IDLE mode.

4.4 The SDF equipment set up to cause an error message to be displayed on console #1 for both the MLF and LCC.

5.0 PROCEDURE

5.1 Display Rate

5.1.1 Place DCE in manual mode & execute $GO.

5.1.2 Refer to step 6.0 of section 1 of the IBM User's Manual and enter a request to slow the rate of display of the MLF error message.

5.1.3 Verify that the rate of display of the MLF error message is approximately one-eight the normal rate.

REVISIONS			
SYM	DESCRIPTION	DATE	APPROVAL

5.1.4 Refer to step 6.0 of section 1 of the IBM User's Manual and enter a request to return to normal the rate of display of the MLF error message.

5.1.5 Verify that the rate of display is normal.

5.1.6 Repeat steps 5.1.1 through 5.1.4 above as applicable to the LCC error message.

6.0 ERROR MESSAGES

6.1 Enter $RERMSLOWN 74 and verify display of the following message:

INVALID DC INPUT FORMAT FOR CHANGE
OF ERROR MSG RATE

6.2 Enter $RERMNORML 31 and verify display of the following message:

IODC DEVICE ERROR MSG NUMBER
31 FROM DC IS INVALID

6.3 Clear the error conditions in the SDF equipment.

MSFC FORM 422 (VERTICAL) (AUGUST 1960)

NOTICE — When Government drawings, specifications, or other data are used for any purpose other than in connection with a definitely related Government procurement operation, the United States Government thereby incurs no responsibility nor obligation whatsoever; and the fact that the Government may have formulated, furnished, or in any way supplied the said drawings specifications or other data is not to be regarded by implication or otherwise as in any manner licensing the holder or any other person or corporation, or conveying any rights or permission to manufacture, use, or sell any patented invention that may in any way be related thereto.

APPLICATION		PART No.	M F	REVISIONS			
NEXT ASSY	USED ON			SYM	DESCRIPTION	DATE	APPROVAL

AS-503

VERIFICATION PROCEDURE

UTILITY EXECUTIVE (UTIL)

73V1207

UNLESS OTHERWISE SPECIFIED DIMENSIONS ARE IN INCHES TOLERANCES ON: FRACTIONS DECIMALS ANGLES	ORIGINAL DATE OF DRAWING 7/23/68 DRAFTSMAN / CHECKER TRACER / CHECKER ENGINEER / ENGINEER	UTILITY EXECUTIVE (UTIL) AS-503	GEORGE C. MARSHALL SPACE FLIGHT CENTER NATIONAL AERONAUTICS AND SPACE ADMINISTRATION HUNTSVILLE, ALABAMA
MATERIAL	SUBMITTED P. L. Sutherland		
HEAT TREATMENT			
FINAL PROTECTIVE FINISH	APPROVED J. C. Ash	SCALE / UNIT WT	DWG SIZE A / 73V1207 / SHEET 1 OF 7

REVISIONS			
SYM	DESCRIPTION	DATE	APPROVAL

1.0 SCOPE

This procedure will verify the Utility Executive program (UTIL).

2.0 APPLICABLE GOVERNMENT FURNISHED DOCUMENTS

2.1 Operator Reference Manual for SLCC Programming System, MSFC No. III-4-440-5, IBM No. 68-F11-0003, dated 15 June 1968.

2.2 MSFC No. 888-4-440-4, Specifications for the Operating System for the Saturn V Launch Computer Complex, Volume 1, Revisionl.

3.0 GENERAL NOTES

Each option of the Utility Executive program will be exercised per the IBM User's Manual.

4.0 PREREQUISITES

4.1 Both 110A's loaded and on-line with the latest delivered IBM operating system tapes.

4.2 The DDP-224 computer loaded with the latest IBM tape and display consoles on-line.

5.0 PROCEDURE

5.1 Date

5.1.1 Depress TYPE pushbutton and key in the following:

$UDAYMM/DD/YY
Where MM - month, DD - the day and YY - the year

5.1.2 Depress EDIT EXECUTE

5.1.3 Verify that the following message is displayed:

THIS DATE ENTRY
MM/DD/YY IS CURRENT
SYSTEM DATE

REVISIONS			
SYM	DESCRIPTION	DATE	APPROVAL

5.2 Alter LCCC Memory

5.2.1 Depress TYPE and key in the following:

$ULCAØØØ4Ø,ØØØØØ543

5.2.2 Depress EDIT EXECUTE

5.2.3 Verify that the following message is displayed:

LCC HSM LOC ØØØ4Ø CHANGED FROM ØØØØØØØØ TO ØØØØØ543

5.3 Display LCCC Memory

5.3.1 Depress TYPE and key in the following:

$ULCDØØØ4Ø

5.3.2 Depress EDIT EXECUTE

5.3.3 Verify that the first location displayed (ØØØ4Ø) contains ØØØØØ543

5.4 Alter MLC Memory

5.4.1 Depress TYPE and key in the following:

$UMCAØØØ4Ø,ØØØØØ677

5.4.2 Depress EDIT EXECUTE

5.4.3 Verify that the following message is displayed:

MLC CORE LOC ØØØ4Ø CHANGED FROM ØØØØØØØØ TO ØØØØØ677

5.5 Display MLC Memory

5.5.1 Depress TYPE and key in the following:

$UMCDØØØ4Ø

5.5.2 Depress EDIT EXECUTE

REVISIONS			
SYM	DESCRIPTION	DATE	APPROVAL

5.5.3 Verify that the first location displayed (00040) contains ØØØØØ677

5.6 Alter LCCC Drum

5.6.1 Depress TYPE and key in the following:

$ULDASSSS+ØØØØ,ØØØØØ222

5.6.2 Depress EDIT EXECUTE

5.6.3 Verify that the following message is displayed:

LCC DRUM LOC SSSS+ØØØØ WAS XXXXXXXX IS ØØØØØ222

5.7 Display LCCC Drum

5.7.1 Depress TYPE and key in the following:

$ULDDSSSS+ØØØØ

5.7.2 Depress EDIT EXECUTE

5.7.3 Verify that the first location displayed (SSSS+ØØØØ) contains ØØØØØ222.

5.8 Alter MLC Drum

5.8.1 Depress TYPE and key in the following:

$UMDASEND+ØØØØ,ØØØØØØØ1

5.8.2 Depress EDIT EXECUTE

5.8.3 Verify that the following message is displayed:

MLC DRUM LOC SEND+ØØØØ WAS XXXXXXXX IS ØØØØØØØ1

5.9 Display MLC Drum

5.9.1 Depress TYPE and key in the following:

$UMDDSEND+ØØØØ

5.9.2 Depress EDIT EXECUTE

5.9.3 Verify that the first location displayed (SEND+ØØØØ) contains ØØØØØØØ1.

REVISIONS			
SYM	DESCRIPTION	DATE	APPROVAL

5.10 Print LCCC Memory

5.10.1 Depress TYPE and key in the following:

$ULCPØØØ1Ø,ØØØ3Ø

5.10.2 Depress EDIT EXECUTE

5.10.3 Verify that the contents of the LCC memory from location ØØØ1Ø-ØØØ3Ø have been printed on the LCC line printer (preceded by index registers 1-6) and that the following message is displayed:

LCC UTILITY REQUEST HAS BEEN PROCESSED

5.11 Print MLC Memory

5.11.1 Depress TYPE and key in the following:

$UMCPØØØ1Ø,ØØØ35

5.11.2 Depress EDIT EXECUTE

5.11.3 Verify that the contents of the MLC memory from location ØØØ1Ø-ØØØ35 have been printed on the MLC line printer (preceded by IR1-6) and that the following message is displayed:

MLC UTILITY REQUEST HAS BEEN PROCESSED

5.12 Print LCCC Drum

5.12.1 Depress TYPE and key in the following:

$ULDPSSSS+ØØØØ,ØØØ6

5.12.2 Depress EDIT EXECUTE

5.12.3 Verify that the contents of the LCC drum address SSSS to SSSS+6 have been printed on the LCC line printer and the following message is displayed:

LCCC UTILITY REQUEST HAS BEEN PROCESSED

5.13 Print MLC Drum

5.13.1 Depress TYPE and key in the following:

$UMDPSEND+ØØØØ,ØØØ3

REVISIONS			
SYM	DESCRIPTION	DATE	APPROVAL

5.13.2 Depress EDIT EXECUTE

5.13.3 Verify that the contents of the MLC drum address SEND to SEND+3 is printed on the MLC line printer and the following message is displayed:

MLC UTILITY REQUEST HAS BEEN PROCESSED

5.14 Display LCCC Error Counters

5.14.1 Depress TYPE and key in the following:

$ULDE

5.14.2 Depress EDIT EXECUTE

5.14.3 Verify that the following is displayed on console #1:

SYSTEM DEVICE ERROR COUNTERS

DEVICE ERROR CNT USE CNT

DO PARITY USE CNT

LCC UTILITY REQUEST HAS BEEN PROCESSED

5.15 Display MLC Error Counters

5.15.1 Depress TYPE and key in the following:

$UMDE

5.15.2 Depress EDIT EXECUTE

5.15.3 Verify that the following is displayed on console #1:

SYSTEM DEVICE ERROR COUNTERS

DEVICE ERROR CNT USE CNT

DO PARITY USE CNT FB ERROR MTOAD

MLC UTILITY REQUEST HAS BEEN PROCESSED

REVISIONS			
SYM	DESCRIPTION	DATE	APPROVAL

5.16 Switch Data Link Terminals

5.16.1 Depress TYPE and key in the following

$ UDLS

5.16.2 Depress EDIT EXECUTE.

5.16.3 Verify that the Data Link Terminals have been switched.

5.17 Print DCC Memory

5.17.1 Depress TYPE and key in the following:

$ UDCC10000

5.17.2 Depress EDIT EXECUTE

5.17.3 Verify that the contents of DCC memory locations 10000 thru 10400 are displayed on the line printer.

5.18 Read Patch Cards

5.18.1 Prepare a patch card for the MLC, load it into the MLC card reader hopper and turn the MLC card reader ON.

5.18.2 Depress TYPE and key in the following:

$ URPM

5.18.3 Depress EDIT EXECUTE.

5.18.4 Verify that the patch card was read into the MLC HSM.

5.18.5 Prepare a patch card for the LCCC, load it into the LCCC card reader hopper and turn the LCCC card reader ON.

5.18.6 Depress TYPE and key in the following:

$ URPL

5.18.7 Depress EDIT EXECUTE.

5.18.8 Verify that the patch card was read into the LCCC HSM.

MSFC FORM 422 (VERTICAL) (AUGUST 1960)

NOTICE—When Government drawings, specifications, or other data are used for any purpose other than in connection with a definitely related Government procurement operation, the United States Government thereby incurs no responsibility nor obligation whatsoever; and the fact that the Government may have formulated, furnished, or in any way supplied the said drawings specifications or other data is not to be regarded by implication or otherwise as in any manner licensing the holder or any other person or corporation, or conveying any rights or permission to manufacture, use, or sell any patented invention that may in any way be related thereto.

APPLICATION		PART No.	M F	REVISIONS			
NEXT ASSY	USED ON			SYM	DESCRIPTION	DATE	APPROVAL

AS-503

VERIFICATION PROCEDURE

(SCP) SENSE CONTROL PANEL

73V1208

UNLESS OTHERWISE SPECIFIED DIMENSIONS ARE IN INCHES TOLERANCES ON: FRACTIONS DECIMALS ANGLES	ORIGINAL DATE OF DRAWING 7/23/68	SENSE CONTROL PANEL AS-503	GEORGE C. MARSHALL SPACE FLIGHT CENTER NATIONAL AERONAUTICS AND SPACE ADMINISTRATION HUNTSVILLE, ALABAMA
MATERIAL	DRAFTSMAN / CHECKER TRACER / CHECKER ENGINEER / ENGINEER		
HEAT TREATMENT	SUBMITTED P. L. Sutherland P. L. Sutherland		
FINAL PROTECTIVE FINISH	APPROVED J. C. Ash J. C. Ash	SCALE UNIT WT	DWG SIZE A 73V1208 SHEET 1 OF 3

REVISIONS			
SYM	DESCRIPTION	DATE	APPROVAL

1.0 SCOPE

This procedure will verify that portion of the IBM User's Manual on the Sense Control Panel.

2.0 APPLICABLE GOVERNMENT FURNISHED DOCUMENTS

2.1 Operator Reference Manual for SLCC Programming System, MSFC No. III-4-440-5, IBM No. 68-F11-0003, dated 15 June 1968.

2.2 MSFC No. 888-4-440-4, Specification for the Operating System for the Saturn V Launch Computer Complex, Volume 1, Revision 1.

3.0 GENERAL NOTES

The sense control panel will be used to perform several of the requests usually performed at the display console.

4.0 PREREQUISITES

4.1 The 110A computers loaded with the AS-503 tapes in accordance with the IBM User's Manual.

4.2 Consoles #1, #2, and #9 of the display system on line.

NOTE: During verification of the sense control panel, console #9 will not be used.

4.3 The computer system in the GO mode.

4.4 All stages powered up.

4.5 All RACS equipment powered up.

4.6 All MLF DDAS equipment on line.

5.0 PROCEDURE

5.1 At console #1, enter $TPRQMT01.

5.1.1 Depress EDIT EXECUTE

5.2 With MT01 ready for execution, perform step 8.1.3 of section 1 of the IBM User's Manual at the LCC sense control panel.

REVISIONS			
SYM	DESCRIPTION	DATE	APPROVAL

5.2 (Continued)

Verify that MT01 is cancelled.

5.2.1 Return Sense Control Bits to Normal position.

5.3 Perform step 8.1.7 of section 1 of the IBM User's Manual.

5.4 At console #1, enter a request for test program MT01. Verify that all processing is being held.

5.5 At the LCC sense control panel, perform step 8.1.6 of section 1 of the IBM User's Manual. Verify that the hold status is released by entering $TPRQMT01 at console #1.

5.6 At console #1, enter $PX and verify that MT01 is executing.

5.7 At the LCC sense control panel, request test program MT01 in accordance with step 8.1.1 of section 1 of the IBM User's Manual.

5.8 With MT01 executive, perform step 8.1.3 of section 1 of the IBM User's Manual. Verify MT01 terminates.

5.9 Perform section 8.1.4. Verify System to Idle.

5.10 Perform section 8.1.5. Verify System to GØ.

MSFC FORM 422 (VERTICAL) (AUGUST 1960)

NOTICE — When Government drawings, specifications, or other data are used for any purpose other than in connection with a definitely related Government procurement operation, the United States Government thereby incurs no responsibility nor obligation whatsoever; and the fact that the Government may have formulated, furnished, or in any way supplied the said drawings specifications or other data is not to be regarded by implication or otherwise as in any manner licensing the holder or any other person or corporation, or conveying any rights or permission to manufacture, use, or sell any patented invention that may in any way be related thereto.

APPLICATION		PART No.	M F	REVISIONS			
NEXT ASSY	USED ON			SYM	DESCRIPTION	DATE	APPROVAL

AS-503

VERIFICATION PROCEDURE

MLC REMOTE LOAD TEST PROGRAM (NT95)

73V1209

UNLESS OTHERWISE SPECIFIED DIMENSIONS ARE IN INCHES TOLERANCES ON: FRACTIONS DECIMALS ANGLES	ORIGINAL DATE OF DRAWING 7/23/68 DRAFTSMAN / CHECKER TRACER / CHECKER ENGINEER / ENGINEER	MLC REMOTE LOAD TEST PROGRAM (NT95) AS-503	GEORGE C. MARSHALL SPACE FLIGHT CENTER NATIONAL AERONAUTICS AND SPACE ADMINISTRATION HUNTSVILLE, ALABAMA
MATERIAL	SUBMITTED P. L. Sutherland P. L. Sutherland		
HEAT TREATMENT			
FINAL PROTECTIVE FINISH	APPROVED J. C. Ash J. C. Ash	SCALE / UNIT WT	DWG SIZE A 73V1209 SHEET 1 OF 2

REVISIONS			
SYM	DESCRIPTION	DATE	APPROVAL

1.0 SCOPE

This procedure will verify the MLC Remote Load Test Program (NT95).

2.0 APPLICABLE GOVERNMENT FURNISHED DOCUMENTS

2.1 Operator Reference Manual for SLCC Programming System, MSFC No. III-4-440-5, IBM No. 68-F11-0003, dated 15 June 1968.

3.0 GENERAL NOTES

This procedure will verify that NT95 provides the capability of reloading the Mobile Launcher Computer with the Operating System program from a remote location.

4.0 PREREQUISITES

4.1 Both 110A's loaded with the latest delivered IBM operating system tape per IBM Operator Instructions.

4.2 DDP-224 operating.

4.3 Display console operating.

4.4 Data link terminal unit properly set up and on line.

5.0 PROCEDURE

5.1 Perform paragraph 11.1 of Part 2 - Volume 1 of MSFC No. III-4-462-1 User Instructions to call up NT95.

5.2 To execute the program, perform paragraphs 11.2 and 11.2.1 of Part 2 - Volume 1 of MSFC No. III-4-462-1 User Instructions.

NOTE: In the absence of the Ground Computer Remote Control Panel, instruct the MLC computer operator to perform paragraph 11.2, steps a through i and paragraph 11.2.1, steps a through s.

5.3 Verify the program action indications as called out in paragraph 11.3 of the User Instructions. Perform both options.

5.4 To terminate the program, perform paragraph 11.1, steps e through g of the User Instructions.

NOTICE — When Government drawings, specifications, or other data are used for any purpose other than in connection with a definitely related Government procurement operation, the United States Government thereby incurs no responsibility nor obligation whatsoever; and the fact that the Government may have formulated, furnished, or in any way supplied the said drawings specifications or other data is not to be regarded by implication or otherwise as in any manner licensing the holder or any other person or corporation, or conveying any rights or permission to manufacture, use, or sell any patented invention that may in any way be related thereto.

APPLICATION		PART No.	M F	REVISIONS			
NEXT ASSY	USED ON			SYM	DESCRIPTION	DATE	APPROVAL

AS-503

VERIFICATION PROCEDURE

DCC REMOTE LOAD-UNLOAD (NT94)

73V1210

UNLESS OTHERWISE SPECIFIED DIMENSIONS ARE IN INCHES TOLERANCES ON: FRACTIONS DECIMALS ANGLES	ORIGINAL DATE OF DRAWING 7/23/68 DRAFTSMAN / CHECKER TRACER / CHECKER ENGINEER / ENGINEER	VERIFICATION PROCEDURE DCC REMOTE LOAD-UNLOAD (NT94) AS-503	GEORGE C. MARSHALL SPACE FLIGHT CENTER NATIONAL AERONAUTICS AND SPACE ADMINISTRATION HUNTSVILLE, ALABAMA
MATERIAL	SUBMITTED P. L. Sutherland P. L. Sutherland		
HEAT TREATMENT			
FINAL PROTECTIVE FINISH	APPROVED J. C. Ash J. C. Ash	SCALE / UNIT WT	DWG SIZE A — 73V1210 — SHEET 1 OF 6

REVISIONS			
SYM	DESCRIPTION	DATE	APPROVAL

1.0 SCOPE

This procedure will verify that portion of the IBM User's Manual on the DCC Remote Load-Unload.

2.0 APPLICABLE GOVERNMENT FURNISHED DOCUMENTS

2.1 Operator Reference Manual for SLCC Programming System, MSFC No. III-4-440-5, IBM No. 68-F11-0003, dated 15 June 1968.

2.2 MSFC No. 888-4-440-4, Specification for the Operating System for the Saturn V Launch Computer Complex, Volume 1, Revision 1.

3.0 GENERAL NOTES

The DCC (Display Control Computer) Remote Load-Unload Program will be used to either load or unload (dump) the DEE core memory. Dumping will allow the operator to record the data contained in the DCC memory either on mag tape or printed out on a line printer.

4.0 PREREQUISITES

4.1 Inhibit DO's via the MDO inhibit switch at the TC's console.

4.2 The 110A computers loaded with the latest delivered tapes in accordance with the IBM User's Manual.

4.3 The DCC (224) loaded with the latest operating tape and load-unload routing according to Manual DMJ-Sat V-66-647.

4.4 Use the master console for all inputs.

4.5 Depress the Priority REQUEST 8'toggle switch on the LCC Maintenance Panel to assure proper discrete scan.

4.6 Terminate any test in progress by switching all DI bits on the Sense Control Panel OFF and then turn DI bits 0 and 23 ON then OFF in order.

5.0 PROCEDURE

5.1 Verify that a scratch tape is mounted on IODC-1, MTS-3 in the LCC and that MTS-3 is on line at the LCC.

5.2 On the Sense Control Panel, turn on DI bits 15 and 23 in order. Then turn bits 15 and 23 off to load NT94.

REVISIONS			
SYM	DESCRIPTION	DATE	APPROVAL

5.3 After NT94 has been loaded from test program tape, verify that the LCC is in a halt condition and that the following message has been printed out on the LCC line printer:

THE DCC LOAD-UNLOAD PROGRAM IS NOW IN PROGRESS:
LOAD THE DCC WITH THE DUMP ROUTINE AND HIT START.

5.4 Have the LCC operator hit START and verify that the following message has been printed out:

REQUEST FOR DATA BLOCK NOT HONORED BY DCC

THE DCC-UNLOAD PROGRAM HAS HAD AN IRRECOVERABLE
ERROR
UNLOAD THE DCC AND HIT START
ANOTHER REQUEST CAN THEN BE ENTERED

5.5 Have the LCC operator depress START and verify that the following message has been printed:

NT94 DCC LOAD-DMP
TEST PROGRAM HAS COMPLETED EXECUTION

5.6 Reload NT94 by setting all DI bits off at the LCC Sense Control Panel and then setting bits 15 and 23 on. (Then turn off.) Then turn all DI bits off.

5.7 Verify that the following message has been printed out:

NT94 DCC LOAD-DMP TEST
PROGRAM HAS STARTED EXECUTION

THE 110A LOAD-UNLOAD PROGRAM IS NOW IN PROGRESS
LOAD THE DCC WITH THE APPROPRIATE ROUTINE AND HIT START

5.8 Have the DCC operator start the DCC computer at location 57400.

5.9 Have the LCC operator hit Start and verify that the following messages have been printed:

DUMP REQUEST OF DCC CORE HAS BEEN COMPLETED

UNLOAD THE DCC AND HIT START
ANOTHER REQUEST CAN THEN BE ENTERED

5.10 Verify that the LCC computer is at a Halt. Have the LCC Operator depress START.

5.11 Verify that the following message has been printed:

NT94 DCC LOAD-DMP
TEST PROGRAM HAS COMPLETED EXECUTION

REVISIONS			
SYM	DESCRIPTION	DATE	APPROVAL

5.12 At the LCC Sense Control Panel, set all DI bits OFF, then set DI bit 17 and ID bit 23. Then turn DI bits 17 and 23 OFF.

5.12.1 Verify that the following messages have been printed and that a Halt has occurred at the LCC:

NT94 DCC LOAD-DMP
TEST PROGRAM HAS STARTED EXECUTION

THE 110A LOAD-UNLOAD PROGRAM IS NOW IN PROGRESS
LOAD THE DCC WITH THE APPROPRIATE ROUTINE AND HIT START

5.12.2 Have the DCC operator load Ø4 bootstrap and start at 0.

5.12.3 Depress start at the LCC and verify that the following messages have been printed:

LOAD REQUEST OF DCC CORE HAS BEEN COMPLETED

UNLOAD THE DCC AND HIT START
ANOTHER REQUEST CAN THEN BE ENTERED

5.12.4 Depress START at the LCC and verify that the following message has been printed:

NT94 LOAD-DMP
TEST PROGRAM HAS COMPLETED EXECUTION

5.13 At the LCC Sense Control Panel, set all DI bits OFF, then set DI bits 16 and 23 ON. (Then turn off.)

5.13.1 Verify that the following message has been printed:

NT94 DCC LOAD-DMP
TEST PROGRAM HAS STARTED EXECUTION

THE 110A LOAD-UNLOAD PROGRAM IS NOT IN PROGRESS
LOAD THE DCC WITH THE APPROPRIATE ROUTINE AND HIT START

5.13.2 Have the DCC operator master clear and start the computer at location 57400.

5.13.3 Have the LCC operator depress START.

5.13.4 Verify that a DCC core dump has occurred on the LCC Line Printer.

5.13.5 Verify that the following messages have been printed:

DUMP REQUEST OF DCC CORE HAS BEEN COMPLETED

UNLOAD THE DCC AND HIT START
ANOTHER REQUEST CAN THEN BE ENTERED

REVISIONS			
SYM	DESCRIPTION	DATE	APPROVAL

5.13.6 Depress START at the LCC and verify that the following message has been printed out:

NT94 DCC LOAD-DMP
TEST PROGRAM HAS COMPLETED EXECUTION

5.13.7 Repeat steps 5.2.1 through 5.2.5.

5.13.8 Bring up the master console by depressing OPERATE, CLEAR, CLEAR PAGE on the Display Console control deck.

5.13.9 Type and EDIT EXECUTE the following message from the Master console:

$TPRQNT94

5.13.10 Set all DI's off at the Sense Control Panel and verify that the following message has been displayed:

THIS REQUEST HAS BEEN STACKED - TPRQNT94
PROGRAM NT94 LOADED, TO EXECUTE ENTER $PX

5.13.11 Type and EDIT EXECUTE the following message from the Master Console:

$CNCLNT94

5.13.12 Verify that the following message has been displayed:

THIS COMMAND IS BEING PROCESSED - CNCLNT94

5.13.13 Type and EDIT EXECUTE the following message from the Master Console:

$TPRQNT94

Verify that the following message is displayed:

THIS REQUEST HAS BEEN STACKED - TPRQNT94
PROGRAM NT94 LOADED, TO EXECUTE ENTER $PX

5.13.14 Type and EDIT EXECUTE the following from the Master Console:

$TERMNT94

5.13.15 Type and EDIT EXECUTE the following message from the Master Console:

$PX

REVISIONS			
SYM	DESCRIPTION	DATE	APPROVAL

Verify that the following message has been displayed:

```
$P1 - to unload the DDP-224 to tape
$P2 - to unload the DDP-224 to tape and printer
$P4 - to load the DDP-224.
Enter desired option.
```

5.13.16 Have the LCC operator hit START.

5.13.17 Verify the following messages have been printed at the LCC Line Printer:

```
REQUEST FOR DATA BLOCK NOT HONORED BY DCC

THE DCC-UNLOAD PROGRAM HAS HAD AN IRRECOVERABLE ERROR
UNLOAD THE DCC AND HIT START
ANOTHER REQUEST CAN THEN BE ENTERED
```

5.13.18 Have the LCC operator depress START and verify that the following message has been printed:

```
NT94 DCC LOAD-DMP
TEST PROGRAM HAS COMPLETED EXECUTION
```

MSFC FORM 422 (VERTICAL) (AUGUST 1960)

NOTICE — When Government drawings, specifications, or other data are used for any purpose other than in connection with a definitely related Government procurement operation, the United States Government thereby incurs no responsibility nor obligation whatsoever; and the fact that the Government may have formulated, furnished, or in any way supplied the said drawings specifications or other data is not to be regarded by implication or otherwise as in any manner licensing the holder or any other person or corporation, or conveying any rights or permission to manufacture, use, or sell any patented invention that may in any way be related thereto.

APPLICATION		PART No.	M F	REVISIONS			
NEXT ASSY	USED ON			SYM	DESCRIPTION	DATE	APPROVAL

AS-503

VERIFICATION PROCEDURE

SYSTEM CLOSEOUT PROGRAM (ZT96/ZE96)

73V1211

UNLESS OTHERWISE SPECIFIED DIMENSIONS ARE IN INCHES TOLERANCES ON: FRACTIONS DECIMALS ANGLES	ORIGINAL DATE OF DRAWING 7/23/68 DRAFTSMAN / CHECKER TRACER / CHECKER ENGINEER / ENGINEER	SYSTEM CLOSEOUT PROGRAM (ZT96/ZE96) AS-503	GEORGE C. MARSHALL SPACE FLIGHT CENTER NATIONAL AERONAUTICS AND SPACE ADMINISTRATION HUNTSVILLE, ALABAMA
MATERIAL	SUBMITTED P. L. Sutherland P. L. Sutherland		
HEAT TREATMENT			
FINAL PROTECTIVE FINISH	APPROVED J. C. Ash J. C. Ash	SCALE / UNIT WT	DWG SIZE A — 73V1211 — SHEET 1 OF 4

REVISIONS			
SYM	DESCRIPTION	DATE	APPROVAL

1.0 SCOPE

This procedure will verify the Operating System closeout (ZT96/ZE96) program.

2.0 APPLICABLE GOVERNMENT FURNISHED DOCUMENTS

2.1 Operator Reference Manual for SLCC Programming System, MSFC No. III-4-440-5, IBM No. 68-F11-0003, dated 15 June 1968.

3.0 GENERAL NOTES

This procedure will verify that ZT96/ZE96 offers the following operational capabilities for execution at the MLC and LCCC. It will also verify that when ZE96 is executed independently, the following capabilities are available for execution only at the MLC.

a) Close-out of the system log tapes and switching of control to alternate tapes.
b) Termination of operation of the operating system.
c) Dumping of the contents of core and drum memories onto the log tapes.

4.0 PREREQUISITES

4.1 Both 110A's loaded with the latest delivered IBM Operating System tape per IBM User's Instructions.

4.2 Display system on line.

4.3 Data link properly set up and operating.

4.4 Log tapes, and alternate log tapes on both computers, LCCC and MLC.

5.0 PROCEDURE

5.1 Refer to Section 12 of the document specified in paragraph 2.1 henceforth referred to as the program manual.

5.2 Call up program ZT96/ZE96 per paragraph 12.1 of the program manual.

5.2.1 When the program is loaded, enter option $PE.

5.2.2 Verify the following message is displayed:

THE OPTION ENTERED IS NOT VALID PLEASE REENTER

NOTE: Henceforth the word VERIFY implies verify

REVISIONS			
SYM	DESCRIPTION	DATE	APPROVAL

5.0 (Continued)

the following message is displayed on the display console or line printer in MLC or LCC.

5.2.3 Take the LCCC log tape off line, enter option $PA.

5.2.4 Verify:

LCCC SYSTEM CLOSE OUT NOT COMPLETE - TAPE FAILURE

5.2.5 Return tape on line.

5.3 Repeat step 5.2 of paragraph 5.2.

5.3.1 Remove power from LCCC drum memory. After "drum ready" light goes off, enter option $PD.

5.3.2 Verify:

LCCC SYSTEM CLOSEOUT NOT COMPLETE - DRUM FAILURE

5.3.3 Return drum to operation.

5.4 Repeat step 5.2 of paragraph 5.2.

5.4.1 Enter option $PA.

5.4.2 Verify:

SYSTEM CLOSE OUT HAS COMPLETED OPERATION IN LCCC

5.5 Repeat step 5.2 of paragraph 5.2.

5.5.1 Enter option $PB.

5.5.2 Repeat 5.4.2.

5.6 Repeat step 5.2 of paragraph 5.2.

5.6.1 Enter option $PC.

5.6.2 Repeat 5.4.2.

5.7 Repeat step 5.2 of paragraph 5.2.

5.7.1 Enter option $PD.

5.7.2 Repeat 5.4.2.

5.8 Enter the following:

$FUNCZE96PE

REVISIONS			
SYM	DESCRIPTION	DATE	APPROVAL

5.8.1 Verify:

ZE96 INPUT OPTION IN ERROR - PLEASE REENTER

5.9 Put MLC log tape off line.

5.9.1 Enter $FUNCZE96PC.

5.9.2 Verify:

MLC SYSTEM CLOSE OUT NOT COMPLETE - TAPE FAILURE

5.9.3 Return tape on line.

5.10 Enter $FUNCZE96PA.

5.10.1 Verify:

SYSTEM CLOSE OUT HAS COMPLETED OPERATION IN MLC
EXECUTION OF THIS ROUTINE IS TERMINATED ZE96.

5.11 Enter $FUNCZE96PB.

5.11.1 Repeat 5.10.1.

5.12 Enter $FUNCZE96PC.

5.12.1 Repeat 5.10.1.

5.13 Enter $FUNCZE96PD.

5.13.1 Repeat 5.10.1.

5.14 The following message cannot be validated:

SYSTEM CLOSE OUT MLC OPERATION ABORTED MLC SYSTEM
CLOSE OUT NOT COMPLETE - DRUM FAILURE.

MSFC FORM 422 (VERTICAL) (AUGUST 1960)

NOTICE — When Government drawings, specifications, or other data are used for any purpose other than in connection with a definitely related Government procurement operation, the United States Government thereby incurs no responsibility nor obligation whatsoever; and the fact that the Government may have formulated, furnished, or in any way supplied the said drawings specifications or other data is not to be regarded by implication or otherwise as in any manner licensing the holder or any other person or corporation, or conveying any rights or permission to manufacture, use, or sell any patented invention that may in any way be related thereto.

APPLICATION		PART No.	M F	REVISIONS			
NEXT ASSY	USED ON			SYM	DESCRIPTION	DATE	APPROVAL

AS-503

VERIFICATION PROCEDURE

DISCRETE MONITOR INTERRUPT (SE93)

73V1212

UNLESS OTHERWISE SPECIFIED DIMENSIONS ARE IN INCHES TOLERANCES ON: FRACTIONS DECIMALS ANGLES	ORIGINAL DATE OF DRAWING 7/23/68 DRAFTSMAN / CHECKER TRACER / CHECKER ENGINEER / ENGINEER	DISCRETE MONITOR INTERRUPT STATUS WORD CONTROL, SE93 AS-503	GEORGE C. MARSHALL SPACE FLIGHT CENTER NATIONAL AERONAUTICS AND SPACE ADMINISTRATION HUNTSVILLE, ALABAMA
MATERIAL	SUBMITTED P. L. Sutherland P. L. Sutherland		
HEAT TREATMENT			
FINAL PROTECTIVE FINISH	APPROVED J. C. Ash J. C. Ash	SCALE UNIT WT	DWG SIZE A 73V1212 SHEET 1 OF 5

REVISIONS			
SYM	DESCRIPTION	DATE	APPROVAL

1.0 SCOPE

This procedure details the steps necessary to check the portion of the IBM User's Manual on Discrete Monitor Interrupt Status Work Control, SE93.

2.0 APPLICABLE GOVERNMENT FURNISHED DOCUMENTS

2.1 Operator Reference Manual for SLCC Programming System, MSFC No. III-4-440-5, IBM No. 68-F11-0003, dated 15 June 1968.

2.2 "Discrete Monitor Interrupt Status Word Control", IBM SLCC OP - NOTE No. 50110.

3.0 GENERAL NOTES

The 110A Computer will be loaded with the AS-503 tapes in accordance with the IBM Operator's Instructions. The Display System will be brought on line with the program delivered for the DDP-224 Computer. Verification will be performed in accordance with this procedure.

4.0 PREREQUISITES

4.1 All stage power supplies OFF, and facility power circuit breakers to stage power supplies OPEN.

4.2 The 110A's loaded with the AS-503 tapes in accordance with the IBM computer Operator Instructions.

4.3 The DDP-224 computer loaded and consoles #1, #2 and #9 on line.

4.4 The following auxiliary power supplies and their associated busses ON:

20D100 including busses 20D111, 20D121, 20D141 & 20D161
20D200
28D100
29D100
23D100

4.5 The four MDO patchboards removed from B202-1131A1A1, A2A1, A3A1 and A4A1.

5.0 PROCEDURE

5.1 From Display Console #2, enter and execute $FUNCSE93 as follows:

Depress TYPE
Enter $FUNCSE93
Depress EDIT EXECUTE

REVISIONS			
SYM	DESCRIPTION	DATE	APPROVAL

5.2 Verify the following error message is displayed:

SE93 MAY BE REQUESTED FROM MASTER CONSOLE ONLY

5.3 Move to display console #1 or #9. Enter and execute the following:

$FUNC$E93

5.4 Verify the following options are displayed:

TO CHANGE THE STATUS OF THE DISCRETE MONITOR CONTROL WORDS, ENTER THE FOLLOWING FORMAT:

$FUNCSE93FLD1FLD2

FLD1 = Four digit DI number (0-3023)
X-YY = X = IODC (5 or 7) YY group (1-63)
RALL = RELEASE ALL MASKED

FLD2 = NO ENTRY OR MREL = RELEASE MLC DISCRETE
LREL = RELEASE LCC DISCRETE
MMSK = MASK MLC DISCRETE
LMSK = MASK LCC DISCRETE

5.5 Enter and execute the following:

$FUNCSE930005LMSK

5.6 Verify the following message is displayed:

SE93 HAS ACCEPTED $FUNCSE930005LMSK
LCC DISCRETES 0000 TO 0023 MASKED

5.7 Verify location 00074, Bank 0, LCC computer contains 00177776. Use $ULCD00074 to accomplish this.

5.8 Enter and execute:

$FUNCSE930005LREL

5.9 Verify location 00074, Bank 0, LCC computer contains 00177777.

5.10 Enter and execute:

$FUNCSE935-01LMSK

5.11 Verify location 00074, Bank 0, LCC computer, contains 00177776.

REVISIONS			
SYM	DESCRIPTION	DATE	APPROVAL

5.12 Enter and execute:

$FUNCSE935-01LREL

5.13 Verify location 00074, Bank 0, LCC computer contains 00177777.

5.14 Enter and execute:

$FUNCSE934767LMSK

Verify the following error message is displayed:

SE93 INPUT PARAMETER ERROR
DATA ENTERED - $FUNCSE934767LMSK

5.15 Enter and execute:

$FUNCSE933-75LMSK

Verify the following error message is displayed:

SE93 INPUT PARAMETER ERROR
DATE ENTERED - $FUNCSE933-75LMSK

5.16 Enter and execute:

$FUNCSE930005MMSK

5.17 Using $UNCD00074, verify location 00074, Bank 0, MLF computer contains 00177776.

5.18 Enter and execute:

$FUNCSE935-01MMSK

Verify the following error message is displayed:

SE93 MLC IODC 5-01 CURRENTLY MASKED

5.19 Enter and execute:

$FUNCSE935-01

5.20 Verify location 00074, Bank 0, MLF computer contains 00177777.

5.21 Enter and execute:

$FUNCSE930005MREL

Verify the following error message is displayed:

SE93 MLC IODC 0005 NOT CURRENTLY MASKED

REVISIONS			
SYM	DESCRIPTION	DATE	APPROVAL

5.22 Enter and execute:

$FUNCSE935-01LMSK

5.23 Enter and execute:

$FUNCSE93RALLLREL

Verify the following message is displayed:

LCC ALL MASKED DISCRETES RELEASED

REVISIONS			
SYM	DESCRIPTION	DATE	APPROVAL

This ATOLL Program (ATGT) has been deleted until information is made available indicating what new ATOLL Program will be used as a replacement.

REVISIONS			
SYM	DESCRIPTION	DATE	APPROVAL

This ATOLL Program (ATCO) has been deleted until information is made available indicating what new ATOLL Program will be used as a replacement.

CODE IDENT NO	DWG SIZE	73V1214
	A	SHEET 1 of 1

REVISIONS			
SYM	DESCRIPTION	DATE	APPROVAL

This ATOLL Program (ATCM) has been deleted until information is made available indicating what new ATOLL Program will be used as a replacement.

NOTICE — When Government drawings, specifications, or other data are used for any purpose other than in connection with a definitely related Government procurement operation, the United States Government thereby incurs no responsibility nor obligation whatsoever; and the fact that the Government may have formulated, furnished, or in any way supplied the said drawings specifications or other data is not to be regarded by implication or otherwise as in any manner licensing the holder or any other person or corporation, or conveying any rights or permission to manufacture, use, or sell any patented invention that may in any way be related thereto.

APPLICATION		PART No.	M F	REVISIONS			
NEXT ASSY	USED ON			SYM	DESCRIPTION	DATE	APPROVAL

AS-503

VERIFICATION PROCEDURE

MLC SELF CHECK (DESC)

73V1216

UNLESS OTHERWISE SPECIFIED DIMENSIONS ARE IN INCHES TOLERANCES ON: FRACTIONS DECIMALS ANGLES	ORIGINAL DATE OF DRAWING 7/23/68 DRAFTSMAN / CHECKER TRACER / CHECKER ENGINEER / ENGINEER	MLC SELF CHECK (DESC) AS-503	GEORGE C. MARSHALL SPACE FLIGHT CENTER NATIONAL AERONAUTICS AND SPACE ADMINISTRATION HUNTSVILLE, ALABAMA
MATERIAL	SUBMITTED P. L. Sutherland P. L. Sutherland		
HEAT TREATMENT			
FINAL PROTECTIVE FINISH	APPROVED J. C. Ash J. C. Ash	SCALE UNIT WT	DWG SIZE A 73V1216 SHEET 1 OF 2

REVISIONS			
SYM	DESCRIPTION	DATE	APPROVAL

1.0 SCOPE

THIS PROCEDURE WILL VERIFY THE MFC SELF CHECK TEST ROUTINE(DESC).

2.0 APPLICABLE GOVERNMENT FURNISHED DOCUMENTS

2.1 Operator Reference Manual for SLCC Programming System, MSFC No. III-4-440-5, IBM No. 68-F11-0003, dated 15 June 1968.

3.0 GENERAL NOTES

THIS PROCEDURE WILL VERIFY THE ABILITY TO CALL-UP, EXECUTE, AND TERMINATE DESC.

4.0 PREREQUISITES

4.1 BOTH 110-A'S LOADED WITH THE LATEST OPERATING SYSTEMS AND TEST PROGRAM TAPES PER IBM USER INSTRUCTIONS.

4.2 DDP-224 SYSTEM LOADED WITH A COMPATIBLE TAPE AND THE DISPLAY CONSOLES OPERATING.

5.0 PROCEDURE

5.1 PUT THE SYSTEM INTO THE GO MODE.

5.2 DEPRESS TYPE AND KEY IN THE FOLLOWING:

$FUNCDESC

5.3 DEPRESS EDIT EXECUTE.

5.4 VERIFY THAT THE FOLLOWING MESSAGE IS RECEIVED:

DISCRETE SCAN IS IN THE MONITOR INTERRUPT
MODE ON IODC5 * ******** MLC* XXXX/XX GMT
DISCRETE SCAN IS IN THE MONITOR INTERRUPT
MODE ON IODC 7 ********** MLC* XXXX/XX GMT
THIS ROUTINE HAS BEEN SUCCESSFULLY EXECUTED DESC

MSFC FORM 422 (VERTICAL) (AUGUST 1960)

NOTICE — When Government drawings, specifications, or other data are used for any purpose other than in connection with a definitely related Government procurement operation, the United States Government thereby incurs no responsibility nor obligation whatsoever; and the fact that the Government may have formulated, furnished, or in any way supplied the said drawings specifications or other data is not to be regarded by implication or otherwise as in any manner licensing the holder or any other person or corporation, or conveying any rights or permission to manufacture, use, or sell any patented invention that may in any way be related thereto.

APPLICATION		PART No.	M F	REVISIONS			
NEXT ASSY	USED ON			SYM	DESCRIPTION	DATE	APPROVAL

AS-503

VERIFICATION PROCEDURE

LCC SELF CHECK (DTSC)

73V1217

UNLESS OTHERWISE SPECIFIED DIMENSIONS ARE IN INCHES TOLERANCES ON: FRACTIONS DECIMALS ANGLES	ORIGINAL DATE OF DRAWING 7/23/68	LCC SELF CHECK (DTSC) AS-503	GEORGE C. MARSHALL SPACE FLIGHT CENTER NATIONAL AERONAUTICS AND SPACE ADMINISTRATION HUNTSVILLE, ALABAMA
MATERIAL	DRAFTSMAN / CHECKER TRACER / CHECKER ENGINEER / ENGINEER		
HEAT TREATMENT	SUBMITTED P. L. Sutherland P. L. Sutherland		
FINAL PROTECTIVE FINISH	APPROVED J. C. Ash J. C. Ash	SCALE UNIT WT	DWG SIZE A 73V1217 SHEET 1 OF 3

REVISIONS			
SYM	DESCRIPTION	DATE	APPROVAL

1.0 SCOPE

THIS PROCEDURE WILL VERIFY THE LCC SELF CHECK PROGRAM (DTSC).

2.0 APPLICABLE GOVERNMENT FURNISHED DOCUMENTS

2.1 Operator Reference Manual for SLCC Programming System, MSFC No. III-4-440-5, IBM No. 68-F11-0003, dated 15 June 1968.

3.0 GENERAL NOTES

THIS PROCEDURE WILL VERIFY THE ABILITY TO CALL-UP, EXECUTE AND TERMINATE DTSC.

4.0 PREREQUISITES

4.1 BOTH 110-A'S LOADED WITH THE LATEST OPERATING SYSTEMS AND TEST PROGRAM TAPES PER IBM USER INSTRUCTIONS.

4.2 DDP-224 SYSTEM LOADED WITH A COMPATIBLE TAPE AND THE DISPLAY CONSOLE OPERATING.

5.0 PROCEDURE

5.1 HAVE THE LCC COMPUTER OPERATOR PUT A SCRATCH TAPE ON IODC-1 STATION 3.

5.2 USING DISPLAY OPERATOR ONE, DEPRESS TYPE AND KEY IN THE FOLLOWING:

$TPRQDTSC

5.3 DEPRESS EDIT EXECUTE.

5.4 VERIFY THAT THE FOLLOWING MESSAGE IS RECEIVED.

PROGRAM DTSC LOADED, TØ EXECUTE ENTER $PX

5.5 DEPRESS TYPE AND KEY IN THE FOLLOWING:

$PX

5.6 DEPRESS EDIT EXECUTE.

REVISIONS			
SYM	DESCRIPTION	DATE	APPROVAL

5.0 CONTINUED

5.7 VERIFY THAT THE FOLLOWING MESSAGE IS RECEIVED:

DTSC SELF CHECK
TEST PROGRAM HAS STARTED EXECUTION

5.8 VERIFY THAT THE PROGRAM IS READING OR WRITING ON IODC-1 TAPE STATION 3.

5.9 DEPRESS TYPE AND KEY IN THE FOLLOWING:

$TERMDTSC

5.10 VERIFY THAT DTSC TERMINATES.

MSFC FORM 422 (VERTICAL) (AUGUST 1960)

NOTICE — When Government drawings, specifications, or other data are used for any purpose other than in connection with a definitely related Government procurement operation, the United States Government thereby incurs no responsibility nor obligation whatsoever; and the fact that the Government may have formulated, furnished, or in any way supplied the said drawings specifications or other data is not to be regarded by implication or otherwise as in any manner licensing the holder or any other person or corporation, or conveying any rights or permission to manufacture, use, or sell any patented invention that may in any way be related thereto.

APPLICATION		PART No.	M F	REVISIONS			
NEXT ASSY	USED ON			SYM	DESCRIPTION	DATE	APPROVAL

AS-503

VERIFICATION PROCEDURE

LCC GMT INTERFACE (DT01)

73V1218

UNLESS OTHERWISE SPECIFIED DIMENSIONS ARE IN INCHES TOLERANCES ON: FRACTIONS DECIMALS ANGLES	ORIGINAL DATE OF DRAWING 7/23/68 DRAFTSMAN / CHECKER TRACER / CHECKER ENGINEER / ENGINEER	VERIFICATION PROCEDURE LCC GMT INTERFACE (DT01) AS-503	GEORGE C. MARSHALL SPACE FLIGHT CENTER NATIONAL AERONAUTICS AND SPACE ADMINISTRATION HUNTSVILLE, ALABAMA
MATERIAL	SUBMITTED P. L. Sutherland P. L. Sutherland		
HEAT TREATMENT			
FINAL PROTECTIVE FINISH	APPROVED J. C. Ash J. C. Ash	SCALE UNIT WT	DWG SIZE A 73V1218 SHEET 1 OF 3

REVISIONS			
SYM	DESCRIPTION	DATE	APPROVAL

1.0 SCOPE

THIS PROCEDURE WILL VERIFY THE LCC GMT INTERFACE DIAGNOSTIC PROGRAM (DT01).

2.0 APPLICABLE GOVERNMENT FURNISHED DOCUMENTS

2.1 OPERATOR REFERENCE MANUAL FOR SLCC PROGRAMMING SYSTEM, MSFC NO. III-4-440-5, IBM NO. 68-F11-0003, DATED 15 JUNE 1968.

3.0 GENERAL NOTES

THIS PROCEDURE WILL VERIFY CALL-UP, INSTRUCTION MESSAGE DISPLAY, ABILITY TO EXECUTE OPTIONS, AND TERMINATION.

4.0 PREREQUISITES

4.1 BOTH 110A'S LOADED WITH THE LATEST DELIVERED IBM OPERATING SYSTEM AND TEST PROGRAM TAPE PER IBM USER INSTRUCTIONS.

4.2 DDP-224 LOADED WITH A COMPATIBLE OPERATING SYSTEM AND DISPLAY CONSOLE OPERATING.

5.0 PROCEDURE

5.1 CALL-UP DT01 BY DEPRESSING TYPE, ENTERING $TRRQDT01.

5.2 VERIFY THAT THE FOLLOWING MESSAGE IS DISPLAYED:

LCC GENERAL MESSAGE NO. 0341 XXXX/XX GMT
THIS REQUEST HAS BEEN STACKED TPRQDT01

LCC GMT INTERFACE PROGRAM
INTERRUPTS ARE INHIBITED FOR 50 MS
POSSIBLE LVDC ERROR INDICATIONS
MINIMIZE SWITCH ACTIVITY
ERRORS ARE PRINTED
TERMINATE PROGRAM BY ENTERING STERMDT01
TERMINATION WILL OCCUR IN 4 MINUTES F
PARAMETERS ARE NOT ENTERED
ENTER NOW
$PYXXXX
WHERE Y IS 5 FOR IODC 5 OR 7 FOR IODC 7 AND WHERE X IS LOOP FOR MULTIPASS OR ONCE FOR SINGLE PASS.

REVISIONS			
SYM	DESCRIPTION	DATE	APPROVAL

5.4 VERIFY THAT THE FOLLOWING MESSAGE IS DISPLAYED:

DT01 LCC GMT TEST
TEST PROGRAM HAS STARTED EXECUTION

5.5 DEPRESS TYPE, ENTER $P5ABCD, AND DEPRESS EDIT EXECUTE.

5.6 VERIFY THAT AN ILLEGAL PARAMETERS MESSAGE IS DISPLAYED AND FOLLOWED BY THE MESSAGE IN STEP 5.2.

5.7 BEGIN EXECUTION BY DEPRESSING TYPE, ENTER $P7ONCE, AND ENTERING EDIT EXECUTE.

5.8 VERIFY THAT THE STEP 5.4 MESSAGE IS DISPLAYED.

5.9 DEPRESS TYPE, ENTER $P3ONCE, AND DEPRESS EDIT EXECUTE.

5.10 VERIFY THAT THE STEP 5.6 MESSAGE IS DISPLAYED.

5.11 DEPRESS TYPE, ENTER $P5LOOP, AND DEPRESS EDIT EXECUTE.

5.12 VERIFY THAT THE STEP 5.4 MESSAGE IS DISPLAYED.

5.13 REPEAT STEP 5.9 AND 5.10.

5.14 DEPRESS TYPE, ENTER $P7LOOP, AND DEPRESS EDIT EXECUTE.

NOTE

RECORD THE COUNT CLOCK READOUT AT INSTANT EDIT EXECUTE IS DEPRESSED.

5.15 VERIFY THAT THE STEP 5.4 MESSAGE IS DISPLAYED.

5.16 ADD 4 MINUTES TO TIME RECORDED IN STEP 5.14.

5.17 VERIFY THAT A TERMINATION MESSAGE IS DISPLAYED ONLY AFTER AT LEAST 4 MINUTES HAS ELAPSED FROM TIME RECORDED IN STEP 5.14.

MSFC FORM 422 (VERTICAL) (AUGUST 1960)

NOTICE — When Government drawings, specifications, or other data are used for any purpose other than in connection with a definitely related Government procurement operation, the United States Government thereby incurs no responsibility nor obligation whatsoever; and the fact that the Government may have formulated, furnished, or in any way supplied the said drawings specifications or other data is not to be regarded by implication or otherwise as in any manner licensing the holder or any other person or corporation, or conveying any rights or permission to manufacture, use, or sell any patented invention that may in any way be related thereto.

APPLICATION		PART No.	M F	REVISIONS			
NEXT ASSY	USED ON			SYM	DESCRIPTION	DATE	APPROVAL

AS-503

VERIFICATION PROCEDURE

DDAS ON LINE FUNCTIONAL FOR LCC (DT02)

73V1219

UNLESS OTHERWISE SPECIFIED DIMENSIONS ARE IN INCHES TOLERANCES ON: FRACTIONS DECIMALS ANGLES	ORIGINAL DATE OF DRAWING 7/23/68 DRAFTSMAN / CHECKER TRACER / CHECKER ENGINEER / ENGINEER	VERIFICATION PROCEDURE DDAS ON LINE FUNCTIONAL FOR LCC (DT02) AS-503	GEORGE C. MARSHALL SPACE FLIGHT CENTER NATIONAL AERONAUTICS AND SPACE ADMINISTRATION HUNTSVILLE, ALABAMA
MATERIAL	SUBMITTED P. L. Sutherland P. L. Sutherland		
HEAT TREATMENT			
FINAL PROTECTIVE FINISH	APPROVED J. C. Ash J. C. Ash	SCALE / UNIT WT	DWG SIZE A — 73V1219 — SHEET 1 OF 3

REVISIONS			
SYM	DESCRIPTION	DATE	APPROVAL

1.0 SCOPE

THIS PROCEDURE WILL VERIFY THE DDAS ON LINE FUNCTIONAL FOR LCC DIAGNOSTIC PROGRAM (DT02).

2.0 APPLICABLE GOVERNMENT FURNISHED DOCUMENTS

2.1 OPERATOR REFERENCE MANUAL FOR SLCC PROGRAMMING SYSTEM, MSFC NO. III-4-440-5, IBM NO. 68-F11-0003, DATED 15 JUNE 1968.

3.0 GENERAL NOTES

THIS PROCEDURE WILL VERIFY THE ABILITY TO CALL UP, EXECUTE OPTIONS, AND TERMINATE DT02.

4.0 PREREQUISITES

4.1 BOTH 110-A'S LOADED WITH THE LATEST OPERATING SYSTEMS AND TEST PROGRAM TAPE PER IBM USERS INSTRUCTIONS.

4.2 DDP-224 SYSTEM LOADED WITH A COMPATIBLE TAPE AND THE DISPLAY CONSOLE OPERATING.

5.0 PROCEDURE

5.1 CALL UP DT02 BY DEPRESSING TYPE AND TYPING IN $TPRQDT01.

5.2 DEPRESS EDIT EXECUTE. VERIFY THE FOLLOWING MESSAGE IS DISPLAYED.

LCC GENERAL MESSAGE NO 0341 XXXX/XX GMT
THIS REQUEST HAS BEEN STACKED TPRQDT02

ENTER SPONCE IF DT02 IS TO EXECUTE ONE TIME
ENTER SPLOOP IF DT02 IS TO EXECUTE IN A LOOP

5.3 DEPRESS TYPE AND ENTER $ PONCE.

5.4 DEPRESS EDIT EXECUTE. VERIFY THAT THE FOLLOWING MESSAGE IS DISPLAYED:

DT02 LCC CIU TEST
TEST PROGRAM HAS STARTED EXECUTION
ENTER LOCATIONS TO BE SPOT CHECKED BY DT02
VIA CARD READER. THE CARD FORMAT IS SPECIFIED
UNDER THE INPUT FORMAT OF THE PREP DOCUMENT

REVISIONS			
SYM	DESCRIPTION	DATE	APPROVAL

5.5 TERMINATE PROGRAM BY DEPRESSING TYPE, ENTERING $TERMDTO2, AND DEPRESSING EDIT EXECUTE.

5.6 VERIFY THAT A TERMINATION MESSAGE IS DISPLAYED.

5.7 RECALL DTO2 BY REPEATING STEPS 5.1 AND 5.2.

5.8 EXECUTE $PLOOP OPTION AND VERIFY THAT THE MESSAGE IN STEP 5.4 IS DISPLAYED.

5.9 HAVE A STANDARD 80 COLUMN PUNCHED IN THE FORMAT SHOWN IN SECTION 3.1 OF THE DTO2 PREP. DOCUMENT.

5.10 HAVE THE LCC DDAS OPERATOR SIMULATE THE ADDRESS AND DATA SPECIFIED ON THE CARD.

5.11 HAVE THE LCC COMPUTER OPERATOR PUT THE CARD IN THE CARD READER WITH THE CARD READER ON LINE.

5.12 VERIFY THAT THE PROGRAM READS THE CARD.

5.13 HAVE THE LCC DDAS OPERATOR CHANGE THE SIMULATED DATA TO A VALUE THAT IS OUT-OF-TOLERANCE.

5.14 VERIFY THAT OUT-OF-TOLERANCE READINGS ARE RECEIVED ON THE LCC LINE PRINTER.

5.15 DEPRESS TYPE AND KEY IN THE FOLLOWING:

$TERMDTO2

5.16 DEPRESS EDIT EXECUTE.

5.17 VERIFY THAT DTO2 TERMINATES.

MSFC FORM 422 (VERTICAL) (AUGUST 1960)

NOTICE — When Government drawings, specifications, or other data are used for any purpose other than in connection with a definitely related Government procurement operation, the United States Government thereby incurs no responsibility nor obligation whatsoever; and the fact that the Government may have formulated, furnished, or in any way supplied the said drawings specifications or other data is not to be regarded by implication or otherwise as in any manner licensing the holder or any other person or corporation, or conveying any rights or permission to manufacture, use, or sell any patented invention that may in any way be related thereto.

APPLICATION		PART No.	M F	REVISIONS			
NEXT ASSY	USED ON			SYM	DESCRIPTION	DATE	APPROVAL

AS-503

VERIFICATION PROCEDURE

ACE DATA LINK ON LINE CHECKOUT (DT04)

73V1220

UNLESS OTHERWISE SPECIFIED DIMENSIONS ARE IN INCHES TOLERANCES ON: FRACTIONS DECIMALS ANGLES	ORIGINAL DATE OF DRAWING 7/23/68 DRAFTSMAN / CHECKER TRACER / CHECKER ENGINEER / ENGINEER	VERIFICATION PROCEDURE ACE DATA LINK ON LINE CHECKOUT (DT04) AS-503	GEORGE C. MARSHALL SPACE FLIGHT CENTER NATIONAL AERONAUTICS AND SPACE ADMINISTRATION HUNTSVILLE, ALABAMA		
MATERIAL	SUBMITTED P. L. Sutherland P. L. Sutherland				
HEAT TREATMENT					
FINAL PROTECTIVE FINISH	APPROVED J. C. Ash J. C. Ash	SCALE	DWG SIZE A	73V1220	
		UNIT WT		SHEET 1 OF 3	

REVISIONS			
SYM	DESCRIPTION	DATE	APPROVAL

1.0 SCOPE

THIS PROCEDURE WILL VERIFY THE ACE DATA LINK ON LINE CHECKOUT PROGRAM (DT04).

2.0 APPLICABLE GOVERNMENT FURNISHED DOCUMENTS

2.1 OPERATOR REFERENCE MANUAL FOR SLCC PROGRAMMING SYSTEM, MSFC NO. III-4-440-5, IBM NO. 68-F11-0003, DATED 15 JUNE 1968.

3.0 GENERAL NOTES

THIS PROCEDURE WILL VERIFY THE ABILITY TO CALL UP, EXECUTE OPTIONS AND TERMINATE DT04.

4.0 PREREQUISITES

4.1 BOTH 110-A'S LOADED WITH THE LATEST OPERATING SYSTEMS AND TEST PROGRAM TAPES PER IBM USER INSTRUCTIONS.

4.2 DDP-224 SYSTEM LOADED WITH A COMPATIBLE TAPE AND THE DISPLAY CONSOLES OPERATING.

4.3 THE DEE-6 SYSTEM LOADED WITH THE ACE SIMULATOR PROGRAM.

5.0 PROCEDURE

5.1 USING DISPLAY OPERATOR ONE, DEPRESS TYPE AND KEY IN THE FOLLOWING:

$TPRQDT04

5.2 DEPRESS EDIT EXECUTE.

5.3 VERIFY THE FOLLOWING MESSAGE IS RECEIVED:

PROGRAM DT04 LOADED, TO EXECUTE ENTER $PX

5.4 DEPRESS TYPE AND KEY IN THE FOLLOWING:

$PX

5.5 DEPRESS EDIT EXECUTE.

REVISIONS			
SYM	DESCRIPTION	DATE	APPROVAL

5.6 VERIFY THE FOLLOWING MESSAGE IS RECEIVED:

DTO4 ACE D/L TEST
TEST PROGRAM HAS STARTED EXECUTION
DTO4 HAS SENT THE 43 WORD TEST TABLE ONCE
NO ERRORS ON THIS RUN

DTO4 IS NOW AWAITING PARAMETERS TO BE ENTERED
FOR TABLE ENTER - $PARMTABLEZZZ
FOR WORD ENTER - $PARMWORDXXXXXXXXZZZ
TO TERMINATE ENTER - $TERMDTO4

5.7 DEPRESS TYPE AND KEY IN THE FOLLOWING:

$PARMTABLEOO5

5.8 DEPRESS EDIT EXECUTE.

5.9 VERIFY THE FOLLOWING MESSAGE IS RECEIVED:

DTO4 SENT THE 43 WORD TEST TABLE FOR 5 SECONDS
NO ERRORS OCCURRED DURING ONE PASS OF TABLE

DTO4 IS NOW WAITING FOR A NEW PARAMETER

5.10 DEPRESS TYPE AND KEY IN THE FOLLOWING:

$PARMWORD77700044013

5.11 DEPRESS EDIT EXECUTE.

5.12 VERIFY THAT THE FOLLOWING MESSAGE IS RECEIVED APPROXIMATELY 13 SECONDS AFTER EXECUTION OF STEP 5.11.

DTO4 HAS SENT 77700044 FOR 13 SECONDS
THE WORD WAS SENT 133 TIMES
THE RETURN FAILED 0 TIMES

DTO4 IS NOW WAITING FOR A NEW PARAMETER

5.13 DEPRESS TYPE AND KEY IN THE FOLLOWING:

$TERMDTO4

5.14 VERIFY THAT THE PROGRAM DTO4 TERMINATES.

MSFC FORM 422 (VERTICAL) (AUGUST 1960)

NOTICE — When Government drawings, specifications, or other data are used for any purpose other than in connection with a definitely related Government procurement operation, the United States Government thereby incurs no responsibility nor obligation whatsoever; and the fact that the Government may have formulated, furnished, or in any way supplied the said drawings specifications or other data is not to be regarded by implication or otherwise as in any manner licensing the holder or any other person or corporation, or conveying any rights or permission to manufacture, use, or sell any patented invention that may in any way be related thereto.

APPLICATION		PART No.	M F	REVISIONS			
NEXT ASSY	USED ON			SYM	DESCRIPTION	DATE	APPROVAL

AS-503

VERIFICATION PROCEDURE

SYSTEM RECOVERY (SSRP)

73V1221

UNLESS OTHERWISE SPECIFIED DIMENSIONS ARE IN INCHES TOLERANCES ON: FRACTIONS DECIMALS ANGLES	ORIGINAL DATE OF DRAWING 7/23/68		SYSTEM RECOVERY (SSRP) AS-503	GEORGE C. MARSHALL SPACE FLIGHT CENTER NATIONAL AERONAUTICS AND SPACE ADMINISTRATION HUNTSVILLE, ALABAMA	
	DRAFTSMAN	CHECKER			
	TRACER	CHECKER			
	ENGINEER	ENGINEER			
MATERIAL	SUBMITTED P. L. Sutherland P. L. Sutherland				
HEAT TREATMENT					
FINAL PROTECTIVE FINISH	APPROVED J. C. Ash J. C. Ash		SCALE UNIT WT	DWG SIZE A	73V1221 SHEET 1 OF 6

REVISIONS			
SYM	DESCRIPTION	DATE	APPROVAL

1.0 SCOPE

This procedure will verify the System Recovery Program (SSRP).

2.0 APPLICABLE GOVERNMENT FURNISHED DOCUMENTS

2.1 Operator Reference Manual for SLCC Programming System, MSFC No. III-4-440-5, IBM No. 68-F11-0003, dated 15 June 1968.

3.0 GENERAL NOTES

This procedure will verify the ability of SSRP to recover from a failure and bring the system back on line.

4.0 PREREQUISITES

4.1 Both 110A's loaded with the latest operating system and test program tapes per IBM User Instructions.

4.2 DDP-224 system loaded with a compatible program and the display consoles operating.

5.0 PROCEDURE

5.1 With the system in the GO mode and both 110A's running and the alarm switch in the STOP position, have the LCC operator install a jumper from Bank 5 Nest 1 Module 9 Test Point D to ground.

5.2 Verify that the LCC computer stops with a high speed memory parity error.

5.3 Have the LCC operator put the alarm switch in INH, the interrupt switch in INH, put the INST OS down, press START, clear the M-Register, toggle 00000674 into the M-Register, depress the load -P switch twice, life the one-shot, and press START.

5.4 Verify that the LCC computer comes to a HALT with 46472345 in the M-Register.

5.5 Verify that 00000015 is in the left accumulator.

5.6 Have the LCC operator change the left accumulator to 10000077.

5.7 Remove the jumper called for in step 5.1.

5.8 Have the LCC operator press START.

5.9 Verify by counting that the LCC computer logs 32 records on mag tape station 2-8.

REVISIONS			
SYM	DESCRIPTION	DATE	APPROVAL

5.10 Verify that the following message is output on the LCC Line Printer:

```
LCCC      SYSTEM RECOVERY STATUS

DUMP OF CORE HAS COMPLETED TO LOG TAPE
DUMP OF DRUM HAS COMPLETED TO LOG TAPE
DRUM READ    COMPLETED FOR DUMP
THE FIRST 32 RECORDS OF DUMP ARE ON TAPE 8
CORE DUMP
DRUM DUMP
HSM PARITY SEARCH
STACK  NT99
STACK  NT98
FAST CHECK
RELOAD 224
GENERAL SYSTEM STATUS AT ENTRY TO RECOVERY

LEFT  =  00000002     RIGHT = 00000004
LAST 3 XFERS  07155  07351  07172-LAST
INDEX REGISTERS
1 = 00000000  2 = 00000000  3 = 77777777  4 = 00000000
5 = 00000006  6 = 00000030

GMT WAS 1828/24,683
RELATIVE TIME WAS  00122554
PRIORITY STATUS 2,
IODC   SENSED   WORD

 1     27750003   1
 2     04000006   1
 2     00000000   2
 3     03407777   1
 4     00007777   1
 5     00000004   1
 5     06644074   2
 5     00122554   3
 5     00001000   4
 6     00420000   1
 7     00000004   1
 7     06644066   2
 7     00122557   3
 7     00003000   4

IOS    SENSED

 0     01100002
 1     00000000
 2     00000000
 3     00000000
 4     00000000
 6     72000002
```

CODE IDENT NO	DWG SIZE	73V1221
	A	SHEET 3 of 6

REVISIONS			
SYM	DESCRIPTION	DATE	APPROVAL

5.11 Verify that the LCC comes to a halt and prints out message that the 244 is ready to be loaded.

5.12 Have the 224 operator load the bootstrap.

5.13 Have the LCC 110A operator press START.

5.14 Verify that the LCC computer loads the 224 from mag tape.

5.15 Observing console one, verify that the computer loads DT13.

5.16 Using the Sense Control Panel in the LCC, enter option $PX.

5.17 Verify that the following messages are printed on the line printer:

```
DE04 COMPLETE        FAILURES
MLC GENERAL MESSAGE NO. 0343          1833/05, GMT
THIS ROUTINE HAS BEEN SUCCESSFULLY EXECUTED  DE04

DT13 COMPLETE        0000 FAILURES
DE06 COMPLETE        000 FAILURES
MLC GENERAL MESSAGE NO. 0343          1835/08, GMT
THIS ROUTINE HAS BEEN SUCCESSFULLY EXECUTED  DE06
```

5.18 Observing console one, verify that the computer loads DT15.

5.19 Using the sense control panel in the LCC, enter $PX.

5.20 Verify that the following message is printed on the line printer:

```
DT15 COMPLETE        000 FAILURES
DT14 TST COMPLETE, NO ERRORS DETECTED.
DE05 TST COMPLETE, NO ERRORS DETECTED.
MLC GENERAL MESSAGE NO. 0343          1835/37, GMT
THIS ROUTINE HAS BEEN SUCCESSFULLY EXECUTED  DE05
```

5.21 Verify that NT99 is loaded.

5.22 Execute NT99 with the sense control panel.

5.23 Verify that NT98 is loaded.

5.24 Execute NT98 with the sense control panel.

5.25 Repeat steps 5.1 through 5.5 in the MLC computer, except put the jumper called for in 5.1 in bank 1 instead of bank 5.

5.26 Have the MLC operator change the left accumulator to 10000007.

5.27 Repeat steps 5.7 through 5.9 in the MLC.

REVISIONS			
SYM	DESCRIPTION	DATE	APPROVAL

5.28 Verify that the following message is output on the MLC Line Printer:

```
MLC      SYSTEM RECOVERY STATUS

DUMP OF CORE HAS COMPLETED TO LOG TAPE
DUMP OF DRUM HAS COMPLETED TO LOG TAPE
DRUM READ  COMPLETED FOR DUMP
THE FIRST 32 RECORDS OF DUMP ARE ON TAPE 8
CORE DUMP
DRUM DUMP
HSM PARITY SEARCH
FAST CHECK

GENERAL SYSTEM STATUS AT  ENTRY TO RECOVERY

LEFT = 00000002  RIGHT = 00000000
LAST 3 XFERS  05607  06147  05625-LAST
INDEX REGISTERS
1 = 00000054  2 = 00000000  3 = 40100000  4 = 77777776
5 = 00000006  6 = 00000001

GMT WAS 1309/47.303
RELATIVE TIME WAS  15657305
PRIORITY STATUS 2.
IODC   SENSED   WORD

 1     27700003   1
 2     04000006   1
 2     00000000   2
 3     03400001   1
 4     00000000   1
 5     00000007   1
 5     35233750   2
 5     15657305   3
 5     03001470   4
 6     00000000   1
 7     00000007   1
 7     35233776   2
 7     15657307   3
 7     03003766   4

IOS    SENSED

 0     01100002
 1     00000000
 2     00000000
 3     00000000
 4     00000000
```

REVISIONS			
SYM	DESCRIPTION	DATE	APPROVAL

5.29 Verify that the following messages are output on the MLC Line Printer:

```
DE04 COMPLETE        FAILURES
MLC GENERAL MESSAGE NO. 0343          1314/00. GMT
THIS ROUTINE HAS BEEN SUCCESSFULLY EXECUTED  DE04

DE06 COMPLETE        000 FAILURES
MLC GENERAL MESSAGE NO. 0343          1314/12. GMT
THIS ROUTINE HAS BEEN SUCCESSFULLY EXECUTED  DE06

DE05 TST COMPLETE, NO ERRORS DETECTED.
MLC GENERAL MESSAGE NO. 0343          1314/21. GMT
THIS ROUTINE HAS BEEN SUCCESSFULLY EXECUTED  DE05
```

5.30 Verify that the MLC computer reloads itself from tape station 1-1 and returns to a normal loop.

NOTICE — When Government drawings, specifications, or other data are used for any purpose other than in connection with a definitely related Government procurement operation, the United States Government thereby incurs no responsibility nor obligation whatsoever; and the fact that the Government may have formulated, furnished, or in any way supplied the said drawings specifications or other data is not to be regarded by implication or otherwise as in any manner licensing the holder or any other person or corporation, or conveying any rights or permission to manufacture, use, or sell any patented invention that may in any way be related thereto.

APPLICATION		PART No.	MF	REVISIONS			
NEXT ASSY	USED ON			SYM	DESCRIPTION	DATE	APPROVAL

AS-503

VERIFICATION PROCEDURE

GSE/VEHICLE TOLERANCE UPDATE TEST PROGRAM (MU02)

73V1302

UNLESS OTHERWISE SPECIFIED DIMENSIONS ARE IN INCHES TOLERANCES ON: FRACTIONS DECIMALS ANGLES	ORIGINAL DATE OF DRAWING 6/12/68 DRAFTSMAN / CHECKER TRACER / CHECKER ENGINEER / ENGINEER	GSE/VEHICLE TOLERANCE UPDATE TEST PROGRAM (MU02)	GEORGE C. MARSHALL SPACE FLIGHT CENTER NATIONAL AERONAUTICS AND SPACE ADMINISTRATION HUNTSVILLE, ALABAMA
MATERIAL	SUBMITTED C. Mortensen C. Mortensen		
HEAT TREATMENT	APPROVED J. E. WALLACE	SCALE / DWG SIZE A	73V1302
FINAL PROTECTIVE FINISH		UNIT WT	SHEET 1 OF 7

REVISIONS			
SYM	DESCRIPTION	DATE	APPROVAL

1.0 SCOPE

1.1 This procedure presents the steps necessary to verify the AS-503 GSE/RACS Tolerance Update Test Program (MU02).

2.0 APPLICABLE GOVERNMENT FURNISHED DOCUMENTS

2.1 MSFC No. 1-4-441-11, Specification for the Test Programs for the Saturn V Launch Computer Complex, dated 12 February 1968.

2.2 MSFC No. III-4-462-1, User Instructions for the Operating System and Test Programs for the Saturn V Launch Computer Complex AS-502, dated April 1, 1967.

3.0 GENERAL NOTES

The procedure will verify the test program is capable of updating the GSE/RACS Preprocessor tolerance and unit value tables that have been entered into the GSE/Vehicle Measuring Test Program. The update information can be entered from the display consoles keyboard or the card reader.

4.0 PREREQUISITES

4.1 110A Computers with Operating System Tape.

4.2 DDP-224 Computer and Display Console operating.

4.3 Tolerance and unit values update data cards available. (See Table III)

4.4 Place scratch (log) tape on 1-3 RCA 110A.

4.5 Place latest Data Tape on 2-7 RCA 110A.

5.0 PROCEDURE

5.1 Perform paragraph 1.1 and 1.2 of section 5 of MSFC No. III-4-462-1, User Instructions for the Operating System and Test programs for Saturn V Launch Computer Complex Vehicle SA-502.

5.2 Perform paragraph 1.2.1 of section 5 of User Instructions. Add the following message:

$PDAT␣XXX - or ␣XXX␣TOL␣ CHANGE, where XXX is the measurement number.

5.3 Perform paragraph 1.2.2.1 and 1.2.2.2 of section 5 of User Instructions. Use options 11, 21, 31, 41 and 51 and ALL as applicable for each measurement. (See Table I)

REVISIONS			
SYM	DESCRIPTION	DATE	APPROVAL

5.4 Repeat steps 5.2 and 5.3 for each measurement listed in Table I.

NOTE: Obtain a hard copy of the completion of execution of each measurement.

5.5 Perform paragraph 1.3 of section 5 of the User Instructions.

5.6 Perform paragraph 3.1 of section 5 of User Instructions.

5.7 Perform paragraph 3.2 of section 5 of User Instructions, choosing keyboard input.

5.8 Perform paragraph 3.2.1 of section 5 of User Instructions, insert measurements as listed in Table II.

5.9 Verify the program action indications as called out in paragraph 3.2.3 of section 5 of User Instructions. Observe the drum dump printed on the LCC line printer. Compare with Table II.

5.10 Perform paragraph 3.1 of section 5 of User Instructions.

5.11 Perform paragraph 3.2 of section 5 of User Instructions, choosing card input.

5.12 Perform paragraph 3.2.2 of section 5 of User Instructions, insert tolerance and unit values update cards as provided in prerequisites. (See Table III)

5.13 Verify the program action indications as called out in paragraph 3.2.3 of section 5 of User Instructions. Observe the drum dump printed on the LCC line printer compare with Table III and update cards.

5.14 Repeat steps 5.1 thru 5.5.

5.15 Compare hard copies to determine if update was executed.

5.16 Repeat steps 5.6 thru 5.8. Enter PAD.

5.17 Select any two measurements of Table II and change the tolerance values.

5.18 Repeat steps 5.1 thru 5.5 and 5.15 on the two above selected measurements.

5.19 Repeat steps 5.6 thru 5.8. Enter PAB.

5.20 Select any two measurements from Tables II and/or III. Repeat step 5.1 thru 5.5 and 5.15.

6.0 FAULT ISOLATION

6.1 Perform paragraph 3.1 of section 5 of User Instructions.

REVISIONS			
SYM	DESCRIPTION	DATE	APPROVAL

6.2 Perform paragraph 3.2 of section 5 of User Instructions, choosing keyboard input.

6.3 Perform paragraph 3.2.1 of section 5 of User Instructions. Insert illegal stage message, $PDAT␣S7␣G006␣107␣H5.00␣2.00␣00010.0␣00100.0. Observe that error message of paragraph 3.3.1 is displayed and the response of paragraph 3.3.2 occurs.

6.4 Repeat steps 6.1 thru 6.3 inserting illegal mode rather than illegal stage message, PDAT␣S2␣B001␣202␣D5.00␣2.00␣00030.0␣00300.0.

6.5 Repeat steps 6.1 thru 6.3 inserting illegal BCD voltage, rather than illegal stage, message $PDAT␣I␣A000␣601␣H5.00␣8.88␣00050.0␣00500.0.

6.6 Repeat step 6.1 thru 6.3 inserting illegal DDAS value, rather than illegal stage, message $PDAT␣␣␣␣A␣␣␣␣101␣L5.00␣2.00␣ABCD.F␣10000.0.

6.7 Repeat step 6.1 thru 6.3 inserting illegal measurement, rather than illegal stage, message $PDAT␣S2␣ABC␣DEF␣R5.00␣2.00␣00060.0␣00600.0.

REVISIONS			
SYM	DESCRIPTION	DATE	APPROVAL

TABLE I
MT01

OPTION 11	$PDATCb20-601
	$PDATCb59-602
	$PDATCb82-601
	$PDATJb28-602
OPTION 21	$PDATCb52b408
	$PDATC302b415
	$PDATDb32b415
	$PDATD218b403
OPTION 31	$PDATCb76b219
	$PDATC355b220
	$PDATC848b218
	$PDATMb24b207
OPTION 41	$PDATCb26b106
	$PDATCb98b112
	$PDATC191b115
	$PDATDbb3b105
OPTION 51	$PDATAbbbb131
	$PDATAbbbb221
	$PDATAbbbb725
	$PDATAbbbb764

REVISIONS			
SYM	DESCRIPTION	DATE	APPROVAL

TABLE II
KEYBOARD OPTION

```
$PDATbIUbCb20-601bR2.60b2.55b00000.0b00030.0
$PDATbIUbCb59-602bH4.42b4.39b-0050.0b00125.0
$PDATbS4bCb52b408bR4.99b4.97b00035.0b00047.0
$PDATbS4bC302b415bH3.99b3.96b00360.0b00660.0

     Enter $ULCD00537
     Confirm that the contents of location 00537 are 00500010.

$PDATbS2bCb76b219bH3.73b3.71b-0050.0b00400.0
$PDATbS2bC355b220bR2.21b2.17b-0100.0b00300.0
$PDATbS1bCb26b106bR0.24b0.19b00000.0b00040.0
$PDATbS1bCb98b112bL1.10b1.05b00000.0b00550.0

     Enter ULCD00537
     Confirm that the contents of location 00537 are 01200034

$PDATbbbbAbbbb131bR0.10bb.bbb00000.00b00030.0
$PDATbbbbAbbbb221bH4.90bb.bbb00000.0b01000.0
```

CODE IDENT NO	DWG SIZE	73V1302
	A	SHEET 6

REVISIONS			
SYM	DESCRIPTION	DATE	APPROVAL

TABLE III
CARD INPUT OPTION

```
bIUbCb82-601bH4.51b4.47b-0090.0b00050.0
bIUbJb28-602bL0.40b0.35b00000.0b00010.0
bS4bDb32b415bL1.50b1.45b00000.0b00200.0
bS4bD218b403bR2.45b2.42b-0030.0b00030.0
bS2bC848b218bL1.20b1.15b00000.0b00005.0
bS2bMb24b207bH3.73b3.69b00000.0b00150.0
bS1bC191b115bH4.10b3.98b-0050.0b01000.0
bS1bDbb3b105bR0.15b0.10b00000.0b02000.0
bbbbAbbbb725bR0.10bb.bbb00000.0b00300.0
bbbbAbbbb764bH4.90bb.bbb00020.0b00040.0
```

Enter ULCD00537
Confirm that the contents of location are 02400037.

CODE IDENT NO	DWG SIZE	73V1302
	A	SHEET 7

MSFC FORM 422 (VERTICAL) (AUGUST 1960)

NOTICE — When Government drawings, specifications, or other data are used for any purpose other than in connection with a definitely related Government procurement operation, the United States Government thereby incurs no responsibility nor obligation whatsoever; and the fact that the Government may have formulated, furnished, or in any way supplied the said drawings specifications or other data is not to be regarded by implication or otherwise as in any manner licensing the holder or any other person or corporation, or conveying any rights or permission to manufacture, use, or sell any patented invention that may in any way be related thereto.

APPLICATION		PART No.	M F	REVISIONS			
NEXT ASSY	USED ON			SYM	DESCRIPTION	DATE	APPROVAL

AS-503

VERIFICATION PROCEDURE

RACS RAPID CONTROL PROGRAM (ME01)

73V1303

UNLESS OTHERWISE SPECIFIED DIMENSIONS ARE IN INCHES TOLERANCES ON: FRACTIONS DECIMALS ANGLES	ORIGINAL DATE OF DRAWING 5/22/68 DRAFTSMAN / CHECKER TRACER / CHECKER ENGINEER / ENGINEER	RACS RAPID CONTROL PROGRAM (ME01)	GEORGE C. MARSHALL SPACE FLIGHT CENTER NATIONAL AERONAUTICS AND SPACE ADMINISTRATION HUNTSVILLE, ALABAMA	
MATERIAL	SUBMITTED C. Mortensen			
HEAT TREATMENT				
FINAL PROTECTIVE FINISH	APPROVED J. Wallace	SCALE UNIT WT	DWG SIZE A	73V1303 SHEET 1 OF 8

REVISIONS			
SYM	DESCRIPTION	DATE	APPROVAL

1.0 SCOPE

1.1 This procedure presents the steps necessary to verify the AS-503 RACS Rapid Control Program (ME01).

2.0 APPLICABLE GOVERNMENT FURNISHED DOCUMENTS

2.1 MSFC No. 1-4-441-11 - Specifications for the Test Programs for the Saturn V Launch Computer Complex, dated 8 February, 1968.

2.2 MSFC No. 111-4-462-1 - User Instructions for the Operating System and Test Programs for the Saturn V Launch Computer Complex Vehicle AS-503, dated April 1, 1967.

3.0 GENERAL NOTES

The procedure will verify the test program is capable of providing immediate control of the RACS in four modes under control of the Operating System Function Executor Program.

The ALL mode of the test program sequences H1, LO, and RUN condition at 15 second intervals.

4.0 PREREQUISITES

4.1 110A computers - Operating System mode.

4.2 DDP-224 Computer Operating.

4.3 Display consoles operating.

4.4 MLF and LCC DDAS operating.

4.5 RACS equipment operating.

4.6 S-IC and S-II simulators operating.

4.7 IU and S-IVB Stages operating.

5.0 PROCEDURE

5.1 Perform paragraph 4.1 of section 5 of MSFC No. 111-4-462-1, User Instructions for the Operating System and Test Programs for Saturn V Launch Computer Complex Vehicle AS-503. Choose options listed in Table I.

5.2 Verify the program action indication as called out in paragraph 4.2 of section 5 of User Instructions and observe Stage RACS and MODE listed in Table I.

REVISIONS			
SYM	DESCRIPTION	DATE	APPROVAL

5.3 Perform paragraph 4.1 of section 5 of the User Instructions, inserting conditions per Table 2 to cause messages of paragraph 4.3 of section 5 of User Instructions to be displayed.

REVISIONS			
SYM	DESCRIPTION	DATE	APPROVAL

OPTION	STAGE RACS	MODE	RACK	CHANNEL
RVEH	ALL	RUN	-	-
RGSE	-	RUN	-	-
HSIU	IU	HIGH	-	-
LSIU	IU	LOW	-	-
USE NOTES 1 & 2				
RSIU	IU	RUN	-	-
USE NOTES 1 & 3				
HSIA	S-IC A	HIGH	-	-
LSIA	S-IC A	LOW	-	-
USE NOTES 1 & 4				
HSIB	S-IC B	HIGH		
LSIB	S-IC B	LOW	-	-
USE NOTES 1 & 5				
RSIA	S-IC A	RUN		
USE NOTES 1 & 6				
HSIA	S-IC A	HIGH	-	-
RSIB	S-IC B	RUN	-	-
USE NOTES 1 & 7				
RSIA	S-IC A	RUN	-	-
USE NOTES 1 & 3				
HSIA	S-IC A	HIGH	-	-
USE NOTE 8				
RSIA	S-IC A	RUN	-	-
USE NOTE 9				
HSII	S-II	HIGH	-	-
LSII	S-II	LOW	-	-
USE NOTES 1 & 10				
RSII	S-II	RUN	-	-
USE NOTES 1& 3				
HSIV	S-IVB	HIGH		
LSIV	S-IVB	LOW		

REVISIONS			
SYM	DESCRIPTION	DATE	APPROVAL

OPTION	STAGE RACS	MODE	RACK	CHANNEL
USE NOTES 1 & 11				
RSIV USE NOTES 1 & 3	S-IVB	RUN	-	-
HVEH	ALL	HIGH	-	-
LVEH USE NOTES 1 & 12	ALL	LOW	-	-
RVEH USE NOTES 1 & 3	ALL	RUN	-	-
HSIA0101 USE NOTE 13	S-IC A	HIGH	01	01
LSIA0101 USE NOTE 13	S-IC A	LOW	01	01
RSIA0101 USE NOTE 13	S-IC A	RUN	01	01
ASIA	S-IC A	HIGH LOW RUN	-	-
ASIB	S-IC B	HIGH LOW RUN	-	-
ASII	S-II	HIGH LOW RUN	-	-
ASIV	S-IVB	HIGH LOW RUN	-	-
ASIU	IU	HIGH LOW RUN	-	-
AVEH	ALL	HIGH LOW RUN	-	-
HGSE USE NOTES 14 1 & 15	-	HIGH	-	-

REVISIONS			
SYM	DESCRIPTION	DATE	APPROVAL

OPTION	STAGE RACS	MODE	RACK	CHANNEL
RGSE USE NOTES 1, 3 & 16	-	RUN	-	-
HSIB0715 USE NOTE 17	S-IC B	HIGH	07	15
LSIB0715 USE NOTE 17	S-IC B	LOW	07	15
RSIB0715 USE NOTE 17	S-IC B	RUN	07	15
HSII0920 USE NOTE 18	S-11	HIGH	09	20
LSII0920 USE NOTE 18	S-II	LOW	09	20
RSII0920 USE NOTE 18	S-II	RUN	09	20
ASII0920 USE NOTE 18	S-II	HIGH LOW RUN	09 09 09	20 20 20
ASIA0101 USE NOTE 13	S-IC A	HIGH LOW RUN	01 01 01	01 01 01
ASIB0715 USE NOTE 17	S-IC B	HIGH LOW RUN	07 07 07	15 15 15
HSIV0207 USE NOTE 19	S-IVB	HIGH	02	07
LSIV0207 USE NOTE 19	S-IVB	LOW	02	07
RSIV0207 USE NOTE 19	S-IVB	RUN	02	07
ASIV0207 USE NOTE 19	S-IVB	HIGH LOW RUN	02 02 02	07 07 07
HSIU0110 USE NOTE 20	IU	HIGH	01	10

REVISIONS			
SYM	DESCRIPTION	DATE	APPROVAL

OPTION	STAGE RACS	MODE	RACK	CHANNEL
LSIU0110 USE NOTE 20	IU	LOW	01	10
RSIU0110 USE NOT 20	IU	RUN	01	10
ASIU0110 USE NOTE 20	IU	HIGH	01	10
		LOW	01	10
		RUN	01	10
RVEH	ALL	RUN	-	-
RGSE	-	RUN	-	-

NOTES:

1. Enter $ULCD00772 and $UMCD00772
2. Observe that the contents of location 00772 are 00000020
3. Verify that the contents of loation 00772 are reset to zero
4. Observe that the contents of location 00772 are 00000102
5. Observe that the contents of location 00772 are 00000302
6. Observe that the contents of location 00772 are 00000202
7. Observe that the contents of location 00772 are 00000102
8. As soon as the SIA racks are in HIGH Mode enter $FUNTME01
9. Verify that the S-IC A systemRACS are in the RUN mode and did not go to the LOW mode
10. Verify that the contents of location 00772 are 00000004
11. Verify that the contents of location 00772 are 00000010
12. Verify that the contents of location 00772 are 00000336
13. On the S-IC DDAS Quick Look, dial A1-02-04 and verify that the measurement (C9-104) is receiving a HIGH, LOW and RUN.
14. Call up MDO'S 0834 THRU 0853 and verify they are on.
15. Verify that the contents of location 00772 are 00000001
16. Call up MDO'S 0834 through 0853 and verify they are off.
17. On the S-IC DDAS Quick Look dial A3-06-08 and verify the measurement (F31-115) is receiving a HIGH and RUN.
18. On the S-II DDAS Quick Look, dial A1-13-10 and verify the measurement (C764-218) is receiving a HIGH LOW and RUN.
19. On the IU DDAS Quick Look, dial BO-03-09 and verify the measurement (D181-409) is receiving a HIGH LOW and RUN.
20. On the S-IVB DDAS Quick Look dial AO-05-06 and verify the measurement (F7-601) is receiving a HIGH and RUN.

REVISIONS			
SYM	DESCRIPTION	DATE	APPROVAL

TABLE 2

1. Enter $FUNCME01/015XSIU0101. Verify illegal mode.
2. Enter $FUNCME01/015HXXX0101. Verify illegal stage.
3. Enter $FUNCME01/015HSIU3201. Verify illegal rack.
4. Enter $FUNCME01/015HSIU0121. Verify illegal channel.
5. Enter $FUNCME01/015HSGE0106. Verify illegal Imput.
6. Enter $FUNCMEC1/010. Verify no message.
7. Enter $FUNCTME01. Verify Normal Termination.

MSFC FORM 422 (VERTICAL) (AUGUST 1960)

NOTICE — When Government drawings, specifications, or other data are used for any purpose other than in connection with a definitely related Government procurement operation, the United States Government thereby incurs no responsibility nor obligation whatsoever; and the fact that the Government may have formulated, furnished, or in any way supplied the said drawings specifications or other data is not to be regarded by implication or otherwise as in any manner licensing the holder or any other person or corporation, or conveying any rights or permission to manufacture, use, or sell any patented invention that may in any way be related thereto.

APPLICATION		PART No.	M F	REVISIONS			
NEXT ASSY	USED ON			SYM	DESCRIPTION	DATE	APPROVAL

AS-503

VERIFICATION PROCEDURE

GSE/VEHICLE MEASURING TEST PROGRAM (MT01)

73V1304

UNLESS OTHERWISE SPECIFIED DIMENSIONS ARE IN INCHES TOLERANCES ON: FRACTIONS DECIMALS ANGLES	ORIGINAL DATE OF DRAWING 5/22/68	GSE/VEHICLE MEASURING TEST PROGRAM (MT01) AS-503	GEORGE C. MARSHALL SPACE FLIGHT CENTER NATIONAL AERONAUTICS AND SPACE ADMINISTRATION HUNTSVILLE, ALABAMA
MATERIAL	DRAFTSMAN / CHECKER TRACER / CHECKER ENGINEER / ENGINEER		
HEAT TREATMENT	SUBMITTED C. Mortensen		
FINAL PROTECTIVE FINISH	APPROVED J. Wallace	SCALE UNIT WT	DWG SIZE A 73V1304 SHEET 1 OF 7

REVISIONS			
SYM	DESCRIPTION	DATE	APPROVAL

1.0 SCOPE

1.1 This procedure presents the steps necessary to verify the AS-503 GSE/Vehicle Measuring Test Program (MT01).

2.0 APPLICABLE GOVERNMENT FURNISHED DOCUMENTS

2.1 MSFC No. 1-4-441-11 - Specification for the Test Programs for the Saturn V Launch Computer Complex, dated 8 February 1968.

2.2 MSFC No. III-4-462-1 - User Instructions for the Operating System and Test Programs for the Saturn V Launch Computer Complex SA-503, dated April 1, 1967.

3.0 GENERAL NOTES

The procedure will verify the MT01 Test Program is capable of measuring stage and GSE parameters, performing tolerance comparison and displaying all or specific measurements.

All program options will be exercised.

4.0 PREREQUISITES

4.1 110A computers initialized - Operating System tapes.

4.2 DDP-224 computer initialized.

4.3 Display consoles operating.

4.4 MLF and LCC DDAS operating.

4.5 RACS equipment operating.

4.6 S-IC and S-II simulators operating.

4.7 IU and S-IVB Stages operating.

4.8 Check the voltage on the S-IC and S-II measurement power supplies. Should be 5 volts at the DDAS A2-28-10.

4.9 Place S-IC hardwire switch to telemeter.

4.10 Place scratch (log) tape on 1-3 RCA 110A.

4.11 Place the latest Data Input Tape on 2-7 RCA 110A.

REVISIONS			
SYM	DESCRIPTION	DATE	APPROVAL

5.0 PROCEDURE

5.1 Perform paragraph 1.1, and 1.2, of section 5 of MSFC No. III-4-462-1, User Instructions for the Operating System and Test Programs for Saturn V Launch Computer Complex Vehicle AS-503.

5.2 Perform paragraph 1.2.1 of section 5 of User Instructions. Enter $PDAT MT01 VERIFICATION. This entry must be made each time this paragraph is executed.

5.3 Perform paragraph 1.2.2.1 and 1.2.2.2 of section 5 of User Instructions. See Table 1 for options to be exercised. See Note I.

5.4 Rerun MT01 test and enter an illegal option as shown in Table II.

5.5 Verify the error message is displayed and program reruns to test selection request.

5.6 Enter TERMINATE option from step 1.2.2.2 and verify program terminates.

REVISIONS			
SYM	DESCRIPTION	DATE	APPROVAL

TABLE I
OPTIONS

STAGE	MEAS. NO.	MODE
11	C20-601	ALL
11	C20-601	HIGH
11	C20-601	LOW
11	C20-601	RUN
21	C54-408	ALL
21	C54-408	HIGH
21	C54-408	LOW
21	C54-408	RUN
31	C76-219	ALL
31	C76-219	HIGH
31	C76-219	LOW
31	C76-219	RUN
41	C26-106	ALL
41	C26-106	HIGH
41	C26-601	LOW
41	C26-601	RUN
51	A131	ALL
51	A131	HIGH
51	A131	RUN
12	-	HIGH
12	-	LOW
12	-	RUN
12		ALL

See Notes 2 & 3

REVISIONS			
SYM	DESCRIPTION	DATE	APPROVAL

STAGE	MEAS. NO.	MODE
22	-	HIGH
22	-	LOW
22	-	RUN
22	-	ALL
See Notes 2 & 4		
32	-	HIGH
32	-	LOW
32	-	RUN
32	-	ALL
See Notes 2 & 5		
42	-	HIGH
42	-	LOW
42	-	RUN
42	-	ALL
See Notes 2 & 6		
52	-	HIGH
52	-	RUN
52	-	ALL
See Notes 2 & 7		
13	-	HIGH
13	-	LOW
13	-	RUN
13	-	ALL
23	-	HIGH
23	-	LOW

REVISIONS			
SYM	DESCRIPTION	DATE	APPROVAL

STAGE	MEAS. NO.	MODE
23	-	RUN
23	-	ALL
33	-	HIGH
33	-	LOW
33	-	RUN
33	-	ALL
43	-	HIGH
43	-	LOW
43	-	RUN
43	-	ALL
53	-	HIGH
53	-	RUN
53	-	ALL
63	-	HIGH
63	-	LOW
63	-	RUN
63	-	ALL

NOTES:

1. The number of options used to verify this program will be determined by the Test Engineer.
2. Enter $ULCD00772 and &UMCD00772.
3. Verify that the contents for this location are 00000020.
4. Verify that the contents for this location are 00000010.
5. Verify that the contents for this location are 00000004.
6. Verify that the contents for this location are 00000002.
7. Verify that the contents for this location are 00000001.

REVISIONS			
SYM	DESCRIPTION	DATE	APPROVAL

TABLE II

1. Repeat steps 1.1 thru 1.2.1 of the Users Manual.
2. Enter $PDDTØØ. Verify illegal input.
3. Repeat steps 1.1 thru 1.2.1 fo the Users Manual.
4. Enter $PDATØØ.
5. Repeat step 1.2.2.1 of the User's Manual.
6. Enter $PDAT81. Verify illegal calibration option selected wait for request to reselect.
7. Repeat step 1.1 thru 1.2.1 of the User Manual.
8. Enter $PDATØØ.
9. Repeat step 1.2.2.1 of User Manual.
10. Enter $PDAT11, $PDATA555-604. Verify illegal measurement.
11. Repeat step 1.1 thru 1.2.1 of the User Manual.
12. Enter $PDATØØ.
13. Repeat step 1.2.2.1 of the User Manual.
14. Enter $PDAT11, $PDATAØØ3-603.
15. Repeat step 1.2.2.2 of the User Manual.
16. Enter $PDATAL. Verify illegal message entered from keyboard wait for request to reselect.
17. Place the LCC CIU off line (manual made).
18. Repeat step 1.1 thru 1.2.1 of the User Manual.
19. Enter $PDATØØ.
20. Repeat step 1.2.2.1 of the User Manual.
21. Enter $PDAT11, $PDATAØØ3-603.
22. Repeat step 1.2.2.2 of the User Manual.
23. Enter $PDATHI. Verify DDAS failure.
24. Enter $TERMMT01. Verify normal test program termination message.
25. Return the LCC CIU to the normal mode.

MSFC FORM 422 (VERTICAL) (AUGUST 1960)

NOTICE — When Government drawings, specifications, or other data are used for any purpose other than in connection with a definitely related Government procurement operation, the United States Government thereby incurs no responsibility nor obligation whatsoever; and the fact that the Government may have formulated, furnished, or in any way supplied the said drawings specifications or other data is not to be regarded by implication or otherwise as in any manner licensing the holder or any other person or corporation, or conveying any rights or permission to manufacture, use, or sell any patented invention that may in any way be related thereto.

APPLICATION		PART No.	M F	REVISIONS			
NEXT ASSY	USED ON			SYM	DESCRIPTION	DATE	APPROVAL

AS-503

VERIFICATION PROCEDURE

TELEMETRY PREFLIGHT CALIBRATION TEST PROGRAM (TT01)

73V1305

UNLESS OTHERWISE SPECIFIED DIMENSIONS ARE IN INCHES TOLERANCES ON: FRACTIONS DECIMALS ANGLES MATERIAL HEAT TREATMENT FINAL PROTECTIVE FINISH	ORIGINAL DATE OF DRAWING 6/13/68 DRAFTSMAN / CHECKER TRACER / CHECKER ENGINEER / ENGINEER SUBMITTED for D. L. Perkins C. F. Mortensen APPROVED J. E. Wallace	TELEMETRY PREFLIGHT CALIBRATION TEST PROGRAM (TT01)	GEORGE C. MARSHALL SPACE FLIGHT CENTER NATIONAL AERONAUTICS AND SPACE ADMINISTRATION HUNTSVILLE, ALABAMA
		SCALE UNIT WT	DWG SIZE A 73V1305 SHEET 1 OF 14

REVISIONS			
SYM	DESCRIPTION	DATE	APPROVAL

1.0 SCOPE

1.1 This procedure presents the steps necessary to verify the AS-503 Telemetry Preflight Calibration Test Program (TT01).

2.0 APPLICABLE GOVERNMENT FURNISHED DOCUMENTS

2.1 MSFC No. 1-4-441-11, Specification for the Test Programs for the Saturn V Launch Computer Complex, dated 8 February 1968

2.2 MSFC No. III-4-462-1, User Instructions for the Operating System and Test Programs for the Saturn V Launch Computer Complex AS-503, dated April 1, 1967.

3.0 GENERAL NOTES

The procedure will verify the test program is capable of generating calibration discretes to the Airborne Telemetry Systems. The program is open loop containing no monitoring - this function being performed by the Telemetry Checkout Ground Station.

4.0 PREQUISITES

4.1 110A computers initialized - Operating System tapes.

4.2 DDP-224 computer initialized.

4.3 Display consoles operating.

4.4 S-IC and S-II, simulators operating.

4.5 IU and S-IVB stages operating.

4.6 Telemetry Checkout Ground Station operating. (See Table I)

4.7 Place scratch (log) tape on 2-8 RCA 110A, MLC.

5.0 PROCEDURE

5.1 Verify paragraph 5.1 of section 5 of MSFC No. III-4-462-1, User Instructions for the Operating System and Test Programs for Saturn V Launch Computer Complex Vehicle AS-503.

5.2 Perform paragraph 5.2 of section 5 of User's Manual.

5.3 Start the tape recorders and the oscillograph recorders at the Telemetry Checkout Ground Station.

REVISIONS			
SYM	DESCRIPTION	DATE	APPROVAL

5.4 Perform paragraph 5.3 of section 5 of User Instructions.

5.5 Verify the program action indications as called out in paragraph 5.4 of section 5 of User Instructions.

5.6 Stop Telemetry Checkout Ground Station oscillograph and tape recorders.

5.7 Repeat steps 5.2 thru 5.6.

5.8 Remove the log tape on 2-8.

5.9 Post process by using ZX01 and ZX02.

5.10 Rerun paragraph 5.2 of section 5 of User Instructions.

5.11 Place the TELEMETER CALIBRATION MODE switch (S7) on the S-IC Measuring and RF panel in the PREFLIGHT position.

5.12 Hold the COMMAND switch (S8 on step 5.11 panel) depressed.

5.13 Press TYPE, key in the following, and press EDIT EXECUTE:

$PX

5.14 Verify that the following messages are displayed in any order:

TT01 STARTED AT HHMM/SS.XXX

MALFUNCTION TT01
SIC PREFLIGHT/INFLIGHT CAL MODE - PREFLIGHT
NOT IN DESIRED STATE --- DISCRETE IS LDI ON

MALFUNCTION TT01
SIC SSB SWEEP PREFLT CAL
NOT IN DESIRED STATE DISCRETE IS LDI ON

ERROR IN SWITCH SCAN
SWITCHES NOT IN AUTO POSITION

OPTIONS ENTRIES ARE
TO ABORT ENTER $PA/A
TO RETEST ENTER $PA/D
TO CONTINUE ENTER $PA/C

VARIABLE OPTION PROCESSOR

REVISIONS			
SYM	DESCRIPTION	DATE	APPROVAL

A-NO-GO OPTION
C-JUMP OPTION
D-NON STANDARD OPTION

ENTER LETTER FOR DESIRED OPTION

5.15 Place S7 (step 5.11) in the INFLIGHT position and hold S8 depressed.

5.16 Enter $PA/D.

5.17 Observe the following message:

MALFUNCTION TT01
FM INFLT CAL MODE
NOT IN DESIRED STATE - DISCRETE IS LDI ON

ERROR IN SWITCH SCAN
SWITCHES NOT IN AUTO POSITION

OPTION ENTRIES ARE
TO ABORT ENTER $PA/A
TO RETEST ENTER $PA/D
TO CONTINUE ENTER $PA/C

VARIABLE OPTION PROCESSOR

A-NO-GO OPTION
C-JUMP OPTION
D-NON STANDARD OPTION

ENTER LETTER FOR DESIRED OTPION

5.18 Return S7 to the AUTO position. Place all TELEMETRY CALIBRATION PREFLIGHT LEVEL switches on all stage RF and Mesauring Panels to the 25% positions.

5.19 Enter $PA/D.

5.20 Observe the following message:

MALFUNCTION TT01
S-IC PREFLT LEVEL - 25%
NOT IN DESIRED STATE - DISCRETE IS LDI ON

MALFUNCTION TT01
S-II PREFLT LEVEL - 25%
NOT IN DESIRED STATE - DISCRETE IS LDI ON

MALFUNCTION TT01
S-IVB PREFLT LEVEL - 25%
NOT IN DESIRED STATE - DISCRETE IS LDI ON

REVISIONS			
SYM	DESCRIPTION	DATE	APPROVAL

MALFUNCTION TT01
IU PREFLT LEVEL - 25%
NOT IN DESIRED STATE - DISCRETE IS LDI ON

ERROR IN SWITCH SCAN
SWITCHES NOT IN AUTO POSITION

OPTION ENTRIES ARE
TO ABORT ENTER $PA/A
TO RETEST ENTER $PA/D
TO CONTINUE ENTER $PA/C

VARIABLE OPTION PROCESSOR

A-NO-GO OPTION
C-JUMP OPTION
D-NON STANDARD OPTION

ENTER LETTER FOR DESIRED OPTION

5.21 Repeat step 5.18 except place all switches in the 50% position.

5.22 Enter $PA/D.

5.23 Observe the following message:

MALFUNCTION TT01
S-IC PREFLT LEVEL - 50%
NOT IN DESIRED STATE - DISCRETE IS LDI ON

MALFUNCTION TT01
S-II PREFLT LEVEL - 50%
NOT IN DESIRED STATE - DISCRETE IS LDI ON

MALFUNCTION TT01
S-IVB PREFLT LEVEL - 50%
NOT IN DESIRED STATE - DISCRETE IS LDI ON

MALFUNCTION TT01
IU PREFLT LEVEL - 50%
NOT IN DESIRED STATE - DISCRETE IS LDI ON

ERROR IN SWITCH SCAN
SWITCHES NOT IN AUTO POSITION

OPTION ENTRIES ARE
TO ABORT ENTER $PA/A
TO RETEST ENTER $PA/D
TO CONTINUE ENTER $PA/C

VARIABLE OPTION PROCESSOR

REVISIONS			
SYM	DESCRIPTION	DATE	APPROVAL

A-NO-GO OPTION
C-JUMP OPTION
D-NON STANDARD OPTION

ENTER LETTER FOR DESIRED OPTION

5.24 Repeat step 5.18 except place all switches in the 75% position.

5.25 Enter $PA∅D.

5.26 Observe the following message:

MALFUNCTION TT01
S-IC PREFLT LEVEL - 25%
NOT IN DESIRED STATE - DISCRETE IS LDI ON

MALFUNCTION TT01
S-IC PREFLT LEVEL - 50%
NOT IN DESIRED STATE - DISCRETE IS LDI ON

MALFUNCTION TT01
S-II PREFLT LEVEL - 25%
NOT IN DESIRED STATE - DISCRETE IS LDI ON

MALFUNCTION TT01
S-II PREFLT LEVEL - 50%
NOT IN DESIRED STATE - DISCRETE IS LDI ON

MALFUNCTION TT01
S-IVB PREFLT LEVEL - 25%
NOT IN DESIRED STATE - DISCRETE IS LDI ON

MALFUNCTION TT01
S-IVB PREFLT LEVEL - 50%
NOT IN DESIRED STATE - DISCRETE IS LDI ON

MALFUNCTION TT01
IU PREFLT LEVEL - 75%
NOT IN DESIRED STATE - DISCRETE IS LDI ON

ERROR IN SWITCH SCAN
SWITCHES NOT IN AUTO POSITION

OPTION ENTRIES ARE
TO ABORT ENTER $PA∅A
TO RETEST ENTER $PA∅D
TO CONTINUE ENTER $PA∅C

VARIABLE OPTION PROCESSOR

A-NO-GO OPTION
C-JUMP OPTION
D-NON STANDARD OPTION

REVISIONS			
SYM	DESCRIPTION	DATE	APPROVAL

ENTER LETTER FOR DESIRED OPTION

5.27 Repeat step 5.18 except place all switches in the 100% position.

5.28 Enter $PA∅D.

5.29 Observe the following message:

MALFUNCTION TT01
S-IC PREFLT LEVEL - 100%
NOT IN DESIRED STATE - DISCRETE IS LDI ON

MALFUNCTION TT01
S-II PREFLT LEVEL - 100%
NOT IN DESIRED STATE - DISCRETE IS LDI ON

MALFUNCTION TT01
S-IVB PREFLT LEVEL - 100%
NOT IN DESIRED STATE - DISCRETE IS LDI ON

MALFUNCTION TT01
IU PREFLT LEVEL - 100%
NOT IN DESIRED STATE - DISCRETE IS LDI ON

ERROR IN SWITCH SCAN
SWITCHES NOT IN AUTO POSITION

OPTION ENTRIES ARE
TO ABORT ENTER $PA∅A
TO RETEST ENTER $PA∅D
TO CONTINUE ENTER $PA∅C

VARIABLE OPTION PROCESSOR

A-NO-GO OPTION
C-JUMP OPTION
C-NON STANDARD OPTION

ENTER LETTER FOR DESIRED OPTION

5.30 Return the switches in step 5.18 to the AUTO position.

5.31 Place the following switches on the S-II RF and Measuring Panel to the positions shown:

S8 OFF
S5 INFLIGHT
S7 OFF
S17 MODE 3

5.32 Enter $PA∅D.

REVISIONS			
SYM	DESCRIPTION	DATE	APPROVAL

5.33 Observe the following message:

MALFUNCTION TT01
S-II PREFLT/INFLT CAL MODE - INFLT
NOT IN DESIRED STATE - DISCRETE IS LDI ON

MALFUNCTION TT01
S-II INFLT CAL CMD
NOT IN DESIRED STATE - DISCRETE IS LDI ON

MALFUNCTION TT01
S-II SSB SWEEP PREFLT CAL
NOT IN DESIRED STATE - DISCRETE IS LDI ON

MALFUNCTION TT01
S-II PCM MODE 3
NOT IN DESIRED STATE - DISCRETE IS LDI ON

ERROR IN SWITCH SCAN
SWITCHES NOT IN AUTO POSITION

OPTION ENTRIES ARE
TO ABORT ENTER $PA/A
TO RETEST ENTER $PA/D
TO CONTINUE ENTER $PA/C

VARIABLE OPTION PROCESSOR

A-NO-GO OPTION
C-JUMP OPTION
D-NON STANDARD OPTION

ENTER LETTER FOR DESIRED OPTION

5.34 Repeat step 5.31 except place the switches in the following position:

S8 ON (hold depressed)
S5 PREFLIGHT
S7 ON (hold depressed)
S17 MODE 2

5.35 Enter $PA/D.

5.36 Observe the following message:

MALFUNCTION TT01
S-II PREFLT/INFLT CAL MODE - PREFLT
NOT IN DESIRED STATE - DISCRETE IS LDI ON

MALFUNCTION TT01
S-II FM INFLT CAL CMD
NOT IN DESIRED STATE - DISCRETE IS LDI ON

REVISIONS			
SYM	DESCRIPTION	DATE	APPROVAL

MALFUNCTION TT01
S-II SSB SWEEP PREFLT CAL
NOT IN DESIRED STATE - DISCRETE IS LDI ON

MALFUNCTION TT01
S-II PCM MODE 2
NOT IN DESIRED STATE - DISCRETE IS LDI ON

ERROR IN SWITCH SCAN
SWITCHES NOT IN AUTO POSITION

OPTION ENTRIES ARE
TO ABORT ENTER $PA/A
TO RETEST ENTER $PA/D
TO CONTINUE ENTER $PA/C

VARIABLE OPTION PROCESSOR

A-NO-GO OPTION
C-JUMP OPTION
D-NON STANDARD OPTION

ENTER LETTER FOR DESIRED OPTION

5.37 Return all switches in step 5.31 to the AUTO position.

5.38 Place the following switches on the S-IVB Measuring and RF panel to the positions shown:

S2 INFLIGHT
S8 OFF
S9 OFF
S30 OFF

5.39 Enter $PA/D.

5.40 Observe the following message:

MALFUNCTION TT01
S-IVB PREFLT/INFLT CAL MODE - INFLT
NOT IN DESIRED STATE - DISCRETE IS LDI ON

MALFUNCTION TT01
S-IVB REG TLM SWSLT CMD
NOT IN DESIRED STATE - DISCRETE IS LDI ON

MALFUNCTION TT01
S-IVB SPECIAL TLM SWSLT CMD
NOT IN DESIRED STATE - DISCRETE IS LDI ON

MALFUNCTION TT01
S-IVB INFLT RELAYS SWSLT CMD
NOT IN DESIRED STATE - DISCRETE IS LDI ON

REVISIONS			
SYM	DESCRIPTION	DATE	APPROVAL

ERROR IN SWITCH SCAN
SWITCHES NOT IN AUTO POSITION

OPTION ENTRIES ARE
TO ABORT ENTER $PA/A
TO RETEST ENTER $PA/D
TO CONTINUE ENTER $PA/C

VARIABLE OPTION PROCESSOR

A-NO-GO OPTION
C-JUMP OPTION
D-NON STANDARD OPTION

ENTER LETTER FOR DESIRED OPTION

5.41 Repeat step 5.38 except place switches in the positions shown:

S2 AUTO
S8 ON
S9 ON
S30 ON

5.42 Enter $PA/D.

5.43 Observe the following message:

MALFUNCTION TT01
S-IVB INFLT RELAYS SWSLT CMD
NOT IN DESIRED STATE - DISCRETE IS LDI ON

MALFUNCTION TT01
S-IVB REG TLM SWSLT CMD
NOT IN DESIRED STATE - DISCRETE IS LDI ON

MALFUNCTION TT01
S-IVB SPECIAL TLM SWSLT CMD
NOT IN DESIRED STATE - DISCRETE IS LDI ON

ERROR IN SWITCH SCAN
SWITCHES NOT IN AUTO POSITION

OPTION ENTRIES ARE
TO ABORT ENTER $PA/A
TO RETEST ENTER $PA/D
TO CONTINUE ENTER $PA/C

VARIABLE OPTION PROCESSOR

A-NO-GO OPTION
C-JUMP OPTION
D-NON STANDARD OPTION

REVISIONS			
SYM	DESCRIPTION	DATE	APPROVAL

ENTER LETTER FOR DESIRED OPTION

5.44 Return all switches in step 5.38 to the AUTO position.

5.45 Place S2 on the S-IVB Measuring and RF Panel to the PREFLIGHT position. Hold S10 depressed.

5.46 Enter $PA∅D.

5.47 Observe the following message:

MALFUNCTION TT01
S-IVB SSB SWEEP PREFLT CAL
NOT IN DESIRED STATE - DISCRETE IS LDI ON

ERROR IN SWITCH SCAN
SWITCHES NOT IN AUTO POSITION

OPTION ENTRIES ARE
TO ABORT ENTER $PA∅A
TO RETEST ENTER $PA∅D
TO CONTINUE ENTER $PA∅C

VARIABLE OPTION PROCESSOR

A-NO-GO OPTION
C-JUMP OPTION
D-NON STANDARD OPTION

ENTER LETTER FOR DESIRED OPTION

5.48 Place the following switches on the IU Measuring and Tracking Panel to the positions shown:

S2 INFLIGHT
S9 SSB

5.49 Enter $PA∅D.

5.50 Observe the following message:

MALFUNCTION TT01
IU PREFLT/INFLT CAL MODE - INFLT
NOT IN DESIRED STATE - DISCRETE IS LDI ON

MALFUNCTION TT01
IU AC/SSB SWITCH - SSB
NOT IN DESIRED STATE - DISCRETE IS LDI ON

ERROR IN SWITCH SCAN
SWITCHES NOT IN AUTO POSITION

REVISIONS			
SYM	DESCRIPTION	DATE	APPROVAL

OPTION ENTRIES ARE
TO ABORT ENTER $PA/A
TO RETEST ENTER $PA/D
TO CONTINUE ENTER $PA/C

VARIABLE OPTION PROCESSOR

A-NO-GO OPTION
C-JUMP OPTION
D-NON STANDARD OPTION

ENTER LETTER FOR DESIRED OPTION

5.51 Repeat step 5.48 except set the switches to the positions shown:

S2 PREFLIGHT
S9 AUTO

5.52 Enter $PA/D.

5.53 Observe the following message:

MALFUNCTION TT01
IU PREFLT/INFLT CAL MODE - PREFLT
NOT IN DESIRED STATE - DISCRETE IS LDI ON

ERROR IN SWITCH SCAN
SWITCHES NOT IN AUTO POSITION

OPTION ENTRIES ARE
TO ABORT ENTER $PA/A
TO RETEST ENTER $PA/D
TO CONTINUE ENTER $PA/C

VARIABLE OPTION PROCESSOR

A-NO-GO OPTION
C-JUMP OPTION
D-NON STANDARD OPTION

ENTER LETTER FOR DESIRED OPTION

5.54 Return all switches to the AUTO position.

5.55 Inhibit the S-IVB stage switch selector.

5.56 Enter $PS/C.

5.57 Observe the following message:

SIV SS CHAN 0065 NOT ISSUED - HARDWARE INHIBITED
MALFUNCTION TT01
S-IVB SPECIAL COMMAND OFF
SWITCH SELECTOR
ERROR CODE 5

REVISIONS			
SYM	DESCRIPTION	DATE	APPROVAL

5.58 Error messages will appear for other switch selector channels as the program continues to execute.

5.59 Observe the normal program termination message.

5.60 Restore the S-IVB stage switch selector inhibit switch to normal.

5.61 Place S2 on the IU Measuring and Tracking panel to the INFLIGHT position.

5.62 Recall the program.

5.63 When the program displays the error message, enter $PA0A.

5.64 Observe the normal program termination message.

5.65 Recall the program.

5.66 After the error message is encountered (S2 on IU panel in wrong position), take the continue option $PA0C.

5.67 Observe the program continues to program completion.

5.68 Restore S2 (Step 5.61) to the normal position.

REVISIONS			
SYM	DESCRIPTION	DATE	APPROVAL

TABLE I

Patch oscillograph patchboard as shown below:

DF1 (Ref)

IRIG CH	DISCRIMINATOR	O'GRAPH #2 CH
2	6	2
5	9	3
6	10	4
7	11	5
9	13	6
10	14	7
11	15	8
12	16	9
15	19	10
FM3 17-4	8	14
17-6	32 27	15
17-8	12	16
	32	

DF2 (Ref)

2	23	19
6	38	20
7	28	21
8	29	22
9	30	23
10	42	24
11	43	25
12	44	26
15	47	28
FM3 14-5	26	35
14-6	31 27	36
	31	

SSB	O'GRAPH #1 CH
1	1
2	2
3	3
4	4
5	5

DF1 -- On the Discriminator Selector Panel, depress "A"

DF2 -- On the Discriminator Selector Panel, depress "B"

FM3 -- On the Discriminator Selector Panel, depress "F"

MSFC FORM 422 (VERTICAL) (AUGUST 1960)

NOTICE — When Government drawings, specifications, or other data are used for any purpose other than in connection with a definitely related Government procurement operation, the United States Government thereby incurs no responsibility nor obligation whatsoever; and the fact that the Government may have formulated, furnished, or in any way supplied the said drawings specifications or other data is not to be regarded by implication or otherwise as in any manner licensing the holder or any other person or corporation, or conveying any rights or permission to manufacture, use, or sell any patented invention that may in any way be related thereto.

APPLICATION		PART No.	MF	REVISIONS			
NEXT ASSY	USED ON			SYM	DESCRIPTION	DATE	APPROVAL

AS-503

VERIFICATION PROCEDURE

ECS TEMPERATURE GRAPHIC DISPLAY PROGRAM (ME02)

72V1308

UNLESS OTHERWISE SPECIFIED DIMENSIONS ARE IN INCHES TOLERANCES ON: FRACTIONS DECIMALS ANGLES	ORIGINAL DATE OF DRAWING 7/22/68		ECS TEMPERATURE GRAPHIC DISPLAY PROGRAM (ME02) AS-503	GEORGE C. MARSHALL SPACE FLIGHT CENTER NATIONAL AERONAUTICS AND SPACE ADMINISTRATION HUNTSVILLE, ALABAMA	
	DRAFTSMAN	CHECKER			
	TRACER	CHECKER			
MATERIAL	ENGINEER	ENGINEER			
	SUBMITTED C. F. Mortensen				
HEAT TREATMENT					
FINAL PROTECTIVE FINISH	APPROVED J. E. Wallace		SCALE UNIT WT	DWG SIZE A	72V1308 SHEET 1 OF 5

REVISIONS			
SYM	DESCRIPTION	DATE	APPROVAL

1.0 SCOPE

This procedure presents the steps necessary to verify AS-503 ECS Temperature Graphic Display Program (ME02).

2.0 APPLICABLE GOVERNMENT FURNISHED DOCUMENTS

2.1 MSFC No. 1-4-441-11, Specifications for the Test Programs for the Saturn V Launch Computer Complex Vehicle AS-503.

2.2 MSFC No. III-4-462-1, User Instruction for Saturn V Launch Computer Complex Operating System and Test Programs Vehicle AS-503.

3.0 GENERAL NOTES

The procedure will verify the test program is capable of displaying graphs of the DDAS analog measurements on the test engineer's display console.

4.0 PREREQUISITES

4.1 110A computers initialized - operating system tapes.

4.2 DDP-224 computer initialized.

4.3 Display consoles operating.

4.4 MLF and LCC DDAS operating.

4.5 RACS equipment operating.

4.6 S-IC, S-II simulators operating.

4.7 S-IVB, IU stages operating.

4.8 The following Computer tapes are required; Scratch tape mounted on IODC 1 MTS3, ME02 description tape at IODC 2 MTS 6.

5.0 PROCEDURE

5.1 Perform paragraph 7.1 of Section 5 of MSFC No. III-4-462-1, Users Instructions for Saturn V Launch Computer Complex Operating System and Test Programs Vehicle AS-503 - exercise all options at 015 seconds.

5.2 Verify the program will automatically plot and display the DDAS analog measurements per Section 5, Paragraph 7.2. See Table I for reference information

REVISIONS			
SYM	DESCRIPTION	DATE	APPROVAL

5.3 After three points are plotted, place the MLC DDAS (applicable stage) in the SIMULATE mode with all addresses set to approximately 1 volt (octal count of 0333).

5.4 Verify the program will automatically plot and display the measurements. Note the points should be at a different point than shown in Step 5.2.

5.5 After three additional points are plotted, set all addresses of the MLC DDAS (applicable stage) to 5 volts (octal count of 1747).

5.6 Verify the program will automatically plot and display the measurements. Note, the points should be at a different point than shown in Step 5.2 and Step 5.4.

5.7 Select a measurement from each stage shown in Table I. Set MLC DDAS address of the selected measurement to approximately one volt. All other readings will be invalid.

5.8 Observe the graph of the selected measurement reads 1 Volt.

5.9 Perform paragraph 7.3 of Section 5 User's Instructions.

5.10 Perform Paragraph 7.1 of Section 5 of User's Instructions with an illegal option at 15 seconds. Verify the message will be displayed per Paragraph 7.2 of Section 5 of User's Instructions.

5.11 Place the DDAS out of sync and perform Paragraph 7.1 of Section 5 of User's Instructions with any option at 15 seconds. Verify the message will be displayed per Pargraph 7.4 of Section 5 of User's Instructions.

5.12 Perform Paragraph 7.3 of Section 5 of User's Instructions.

REVISIONS			
SYM	DESCRIPTION	DATE	APPROVAL

TABLE I

MEASUREMENTS AND TELEMETRY - DDAS LIST

MEAS. No.	FUNCTION	RANGE	TELEMETRY CHANNEL
C108-115	S-IC Thrust Frame Compartment Ambient Temperature	-50 to 1000 C	AP1A1-05-06-00
C203-115	S-IC Thrust Frame Ambient Temperature	-60 to 50 C	AP1A3-21-02-00
C165-120	S-IC Forward Skirt Ambient Temperature	-100 to 980C	AP1A2-02-09-00
D98-120	S-IC Forward Skirt Compartment Pressure No.1	0-20 PSIA	AP1BO-03-08-00
D99-120	S-IC Forward Skirt Compartment Pressure No.2	0-20 PSIA	AP1BO-03-09-00
XC212-120	S-IC Equipment Container No. 1 Temperature	-30 to 50C	AP1A1-10-01-00
XC213-120	S-IC Equipment Container No. 2 Temperature	-30 to 50C	AP1A1-07-10
XC214-120	S-IC Equipment Container No.3 Temperature	-30 to 50C	AP1A1-22-02-00
XC215-120	S-IC Equipment Container No.4 Temperature	-30 to 50C	AP1A1-22-03-00
XC217-120	S-IC Equipment Container No. 5 Temperature	-30 to 50C	AP1-22-05-00
C200-200	S-II Interstage Ambient Temperature	-100 to 150F	(Mode 1) BP1A1-26-01-00
C18-219	S-II Forward Skirt Ambient Temperature	-200 to 100 F	(Mode 1) BP1A1-10-01-00
C344-207	S-II Instrument Container 207 Temperature	-100 to 300F	BP1BO-10-02-00
C347-208	S-II Instrument Container 208 Temperature	-100 to 300F	BP1A3-18-06-00
C351-210	S-II Instrument Container 210 Temperature	-100 to 300F	BP1BO-10-05-00

REVISIONS			
SYM	DESCRIPTION	DATE	APPROVAL

(Continued) TABLE I

C358-224	S-II Instrument Container 224 Temperature	-100 to 300F	BP1A1-23-03-00
D52-224	S-II Instrument Container 224 Pressure	-.2 to 2 PSID	BP1BO-16-01-00
C511-223	S-II Instrument to Container 223 Temperature	-100 to 300 F	BP1A1-23-02-00
C510-228	S-II Instrument Container 228 Temperature	-100 to 300F	BP1A1-23-06-00
C359-225	S-II Instrument Container 225 Temperature	-100 to 300F	BP1A1-23-04-00
D42-212	S-II Instrument Container 212 Pressure	-.2 to .2 PSID	BP1A3-15-09-00
C10-403	S-IV B Engine Area Ambient Temperature	260 - 960R	CP1A2-14-05-00
C104-404	S-IVB AFT Battery No.1 Temperature	460 - 660R	CP1A2-20-02-00
C105-404	S-IVB AFT. Battery No.2 Temperature	460 - 660R	CP1A2-20-03-00
C211-411	S-IVB Forward Battery No.1 Temperature	460-660R	CP1A1-17-06-00
C212-404	S-IVB Forward Battery No.2 Temperature	460-660R	DP1BO-21-09-00
XC31-603	IUST-124M Air Temperature	0 to 30C	DP1A0-01-06-00
XC35-601	IU Inlet Air GN2 Temperature	0 to 60C	CP1BO-02-06-00
XC36-601	IU Ambient Temperature	-20 to 45C	CP1BO-02-07-00
VD12-603	IU Internal Pressure	0 to 35 PSIA	DP1A0-14-09-00

MSFC FORM 422 (VERTICAL) (AUGUST 1960)

NOTICE — When Government drawings, specifications, or other data are used for any purpose other than in connection with a definitely related Government procurement operation, the United States Government thereby incurs no responsibility nor obligation whatsoever; and the fact that the Government may have formulated, furnished, or in any way supplied the said drawings specifications or other data is not to be regarded by implication or otherwise as in any manner licensing the holder or any other person or corporation, or conveying any rights or permission to manufacture, use, or sell any patented invention that may in any way be related thereto.

APPLICATION		PART No.	M F	REVISIONS			
NEXT ASSY	USED ON			SYM	DESCRIPTION	DATE	APPROVAL

AS-503

PROGRAM VERIFICATION

COMPUTER INTERFACE UNIT TEST (FT43)

73V1401

UNLESS OTHERWISE SPECIFIED DIMENSIONS ARE IN INCHES TOLERANCES ON: FRACTIONS DECIMALS ANGLES	ORIGINAL DATE OF DRAWING 7/19/68 DRAFTSMAN / CHECKER TRACER / CHECKER ENGINEER / ENGINEER	COMPUTER INTERFACE UNIT TEST (FT43) AS-503	GEORGE C. MARSHALL SPACE FLIGHT CENTER NATIONAL AERONAUTICS AND SPACE ADMINISTRATION HUNTSVILLE, ALABAMA
MATERIAL	SUBMITTED E. N. Bryan E. N. Bryan		
HEAT TREATMENT	APPROVED R. A. Drakey R. A. Drakey	SCALE / DWG SIZE A	73V1401
FINAL PROTECTIVE FINISH		UNIT WT	SHEET 1 OF 10

REVISIONS			
SYM	DESCRIPTION	DATE	APPROVAL

COMPUTER INTERFACE UNIT TEST PROGRAM (FT43)

1.0 SCOPE

THIS PROCEDURE WILL VERIFY THE GUIDANCE SYSTEM TEST PROGRAM "LVDA/LVDC COMPUTER INTERFACE TEST (FT43)".

2.0 APPLICABLE GOVERNMENT FURNISHED DOCUMENTS

DRAWINGS AESS LVDA INTERFACE	50M36401
AESS INSTRUMENT UNIT ESE SATURN V	40M14490
INSTRUMENT UNIT ELECTRICAL SCHEMATICS	40M33221
DOCUMENTS IP & C S-IU-503	6009048
TEST PROGRAM SPECIFICATIONS SATURN V LAUNCH COMPUTER COMPLEX AS-503	67-F11-0008
PRELAUNCH CHECKOUT SPECIFICATIONS AND CRITERIA FOR S-IU-503	68-257-0004
OPERATOR REFERENCE MANUAL FOR SLCC PROGRAMMING SYSTEM	68-F11-0003

3.0 GENERAL NOTES

FT43 will be entered from keyboard in accordance with the IBM Operator Reference Manual. All program options will be exercised and hardware response to computer stimuli will be monitored.

4.0 PREQUISITES

None

REVISIONS			
SYM	DESCRIPTION	DATE	APPROVAL

COMPUTER INTERFACE UNIT TEST PROGRAM (FT43)

5.0 PROCEDURE

5.1 VERIFY THAT THE INSTRUMENT UNIT IS POWERED DOWN.

5.2 VERIFY THAT LVDA (603A29) AND LVDC (603A28) STAGE INTERCONNECTING CABLES ARE INSTALLED ACCORDING TO IU CID (40M33080).

5.3 VERIFY THAT POWER SWITCH (S1) ON THE GCP (601-608A13) IS IN THE "OFF" POSITION.

5.4 NOTIFY POWER ROOM TO CLOSE THE IU CIRCUIT BREAKERS AND PLACE THE +6D100 AND +6D200 BACKUP BATTERIES ON LINE.

5.5 START THE +6D100 AND +6D200 POWER SUPPLIES.

5.6 PLACE THE +6D100 AND +6D200 OUTPUT POWER SWITCHES TO THE "ON" POSITION.

5.7 PLACE THE +6D100 AND +6D200 BACKUP BATTERY ENABLE SWITCHES TO THE "ON" POSITION AND VERIFY BACKUP BATTERY ENABLED INDICATION ON EVENTS DISPLAY PANEL.

5.8 POWER THE INSTRUMENT UNIT UNTIL THE "GROUND POWER" INDICATION IS RECEIVED.

5.9 VERIFY THAT GSCU IS ON.

5.10 ADJUST +6D100 AND +6D200 REMOTE VOLTAGE METERS TO READ 28V (+2,-0) VIA THE VOLTAGE INCREASE/DECREASE SWITCHES.

5.11 VERIFY ESE/LVDA SWITCH IN ESE POSITION.

5.12 ISSUE A SWITCH SELECTOR REGISTER TEST FOR THE IU AND VERIFY THE REGISTER TEST INDICATION.

5.13 REQUEST MLF COMPUTER ENGINEERING TO VERIFY THAT COMPUTER PERIPHERAL EQUIPMENT IS READY TO SUPPORT.

5.14 REQUEST TEST CONDUCTOR TO VERIFY THAT LCC & MLF DDAS IS IN "RECEIVE".

5.15 REQUEST THAT S-IVB STAGE APPLY POWER UNTIL "READY FOR POWER TRANSFER" INDICATION IS RECEIVED.

REVISIONS			
SYM	DESCRIPTION	DATE	APPROVAL

5.0 PROCEDURES (Continued)

5.16 PLACE "POWER ON" SWITCH (S1) AT GCP 601-608A13 TO AUTO POSITION.

5.17 VERIFY INHIBIT SWITCH (S15) IS IN THE "OFF" POSITION ON NETWORK PANEL 601-605A1. (VERIFY ABOVE FOR ALL STAGES).

5.18 REQUEST DDAS ENGINEERING TO POWER UP PCM/DDAS, PAM, F1 AND F2 TELEMETRY SYSTEMS IN THE INSTRUMENT UNIT.

ENTER FT04, POWER ON OPTION, IN ACCORDANCE WITH IBM OPERATOR REFERENCE MANUAL.

5.19 AT SANDERS DISPLAY CONSOLE NO. 2 KEY 7, ENTER COMPUTER INTERFACE TEST PROGRAM (FT43) IN ACCORDANCE WITH THE IBM OPERATOR REFERENCE MANUAL. EXECUTE AND VERIFY COMPUTER INTERFACE PROGRAM (FT43).

DURING EXECUTION OF FT43, AT GCP 601-608A13, MONITOR:

CIU READ ROUTINE MODE CODE 43
MDI 736, 735, - ON

ATTACHMENT "A"

REVISIONS			
SYM	DESCRIPTION	DATE	APPROVAL

LVDA STATUS CODE CONVERSION CHART

LVD	MODE	MDI	SOURCE STATEMENT
00	00	NONE	MODE SORT ROUTINE GROUND ENTRY
01	01	733	(PROGRAM CONTINUE ROUTINE)
02	02	734	ACCELEROMETER PULSE COUNT ROUTINE ENTRY
03	21	734, 733	GIMBAL ANGLE MONITOR ROUTINE ENTRY
04	03	735	DISCRETE INPUT ROUTINE ENTRY
05	31	735, 733	DISCRETE OUTPUT ROUTINE ENTRY
06	32	735, 734	G & C STEERING TEST ENTRY
07	321	735, 734, 733	DOM TEST ROUTINE ENTRY
10	40	736	LADDER ERROR TEST ROUTINE ENTRY
11	41	736, 733	PREPARE TO LAUNCH WITHOUT A PLATFORM
12	42	736, 734	PREPARE TO LAUNCH WITH A PLATFORM
13	421	736, 734, 733	EXERCISE ATTITUDE COMMAND ROUTINE MODE 1 ENTRY
14	43	736, 735	COMPUTER INTERFACE UNIT READ ROUTINE ENTRY
15	431	736, 735, 733	SWITCH SELECTOR ROUTINE ENTRY
16	432	736, 735, 734	SECTOR SUM CHECK ROUTINE ENTRY
17	4321	736, 735, 734, 733	EXERCISE ATTITUDE COMMAND ROUTINE MODE 2 ENTRY
20	50	737	SECTOR DUMP ROUTINE ENTRY
21	51	737, 733	VERIFY AND PREPARE TO LOAD ROUTINE ENTRY
22	52	737, 734	MEMORY ERROR TEST
23	521	737, 734, 733	LOAD ROUTINE ENTRY
24	53	737, 735	MINOR LOOP, SWITCH SELECTOR AND REAL TIME COUNTER TESTS ENTRY
25	531	737, 735, 733	UNASSIGNED

ATTACHMENT "A"

REVISIONS			
SYM	DESCRIPTION	DATE	APPROVAL

30	540	737, 736	PREPARE TO LAUNCH SIM. FLT. WITH A PLATFORM
35	5431	737, 736, 735, 733	COMMAND RECEIVER LINKAGE ROUTINE
40	60	738	POWER UP AND INITIALIZE
52	642	738, 736, 734	UNASSIGNED
53	6421	738, 736, 734, 733	(MINOR LOOP, SWITCH SELECTOR, REAL TIME COUNTER TEST ROUTINE)
54	643	738, 736, 735	(LOAD ROUTINE)
55	6431	738, 736, 735, 733	(MEMORY ERROR TEST ROUTINE)
57	64321	738, 736, 735, 734, 733	(SECTOR DUMP ROUTINE)
60	650	738, 737	(EXERCISE ATTITUDE COMMAND ROUTINE MODE 2)
62	652	738, 737, 734	(SWITCH SELECTOR ROUTINE)
63	6521	738, 737, 734, 733	(COMPUTER INTERFACE UNIT READ ROUTINE)
64,	653	738, 737, 735	(EXERCISE ATTITUDE COMMAND ROUTINE MODE 1)
65	6531	738, 737, 735, 733	(PREPARE TO LAUNCH ROUTINE)
67	65321	738, 737, 735, 734, 733	(LADDER ERROR TEST ROUTINE)
71	6541	738, 737, 736, 733	(G & C STEERING TEST ROUTINE)
72	6542	738, 737, 736, 734	(DISCRETE OUTPUT ROUTINE)
73	65421	738, 737, 736, 734, 733	(DISCRETE INPUT ROUTINE)
74	6543	738, 737, 736, 735	(GIMBAL ANGLE MONITOR ROUTINE)
75	65431	738, 737, 736, 735, 733	(ACCELEROMETER PULSE COUNT ROUTINE)
76	65432	738, 737, 736, 735, 734	(PROGRAM CONTINUE ROUTINE)
(26)	532	737, 735, 734	FORCED BEGIN AND INITIALIZE ROUTINE ENTRY
(27)	5321	737, 735, 734, 733	SYNC RESET SUBROUTINE OVERTIME MESSAGE
(34)	543	737, 736, 735	EXERCISE ATTITUDE COMMAND ROUTINE ERROR ---INITIAL CONVERTER NOT STILL SELECTED
36	5432	737, 736, 735, 734	PREPARE TO LAUNCH---COMMAND TO COMPARE GIVEN AZIMUTH TO STORED AZIMUTH VALUE
(37)	54321	737, 736, 735, 734, 733	RESERVED FOR SIM. FLIGHT

ATTACHMENT "A"

SYM	DESCRIPTION	DATE	APPROVAL
REVISIONS			

(42)	62	738, 734	RESERVED FOR FLIGHT
(43)	621	738, 734, 733	EXERCISE ATTITUDE COMMAND TEST MAXIMUM ATTAINED ON ONE OR MORE AXES
(45)	631	738, 735, 733	READ INPUT DATA SUBROUTINE OVERTIME MESSAGE
(46)	632	738, 735, 734	EXERCISE ATTITUDE COMMAND TEST DRIVING TOWARD NULL
(47)	6321	738, 735, 734, 733	ERROR MONITOR SUBROUTINE ENTRY
(50)	640	738, 736	ABORT TEST STATUS CODE
(51)	641	738, 736, 733	FORCED BEGIN ROUTINE ERROR --- EMR NON-ZERO
(56)	6432	738, 736, 735, 734	VERIFY AND PREPARE TO LOAD ROUTINE TRYING TO LOAD WITHOUT FIRST LOADING PREVIOUS INFORMATION (IF ANY)
(66)	6532	738, 737, 735, 734	ISSUED ON COMPLETION OF REPEATABLE FLT. SIM. RUN
(70)	6540	738, 737, 736	RESERVED FOR SIM. FLIGHT
77	654321	738, 737, 736, 735, 734, 733	FORCES THE EMR SUBROUTINE TO RETURN TO FORCED BEGIN FBDA
31	541	737, 736, 733	UNASSIGNED
32	542	737, 736, 734	LVDC T/M TEST
33	5421	737, 736, 734, 733	UNASSIGNED
41	61	738, 733	UNASSIGNED
44	63	738, 735	UNASSIGNED
61	651	738, 737, 733	UNASSIGNED

ATTACHMENT "B"

REVISIONS			
SYM	DESCRIPTION	DATE	APPROVAL

CHNL	OUTPUT FUNCTION	SIGNAL CODE BINARY	OCTAL
1	COMM Q-BALL POWER OFF	0111 1111	177
2	COMM INHIBIT EXCESSIVE P,Y, & R AUTO-ABORT ON	0101 1111	137
3	COMM IU TAPE RECORDER PLAYBACK REVERSE OFF	0110 0010	142
4	COMM FLIGHT CONTROL COMPUTER SWITCH POINT NO. 4	0110 0001	141
5	COMM FLIGHT CONTROL COMPUTER SWITCH POINT NO. 6	0000 0010	2
6		0010 1101	55
7	COMM FLIGHT CONTROL COMPUTER SWITCH POINT NO. 7	0001 1101	35
8		0011 1111	77
9	COMM S-IVB ENGINE OUT INDICATE ENABLE "A" ON	0001 0011	23
10		0110 0011	143
11	COMMAND S-IVB ENGINE OUT INDICATE ENABLE "B" ON	0111 0011	163
12	COMM FLIGHT CONTROL S-IVB BURN MODE OFF	0100 1101	115
13	COMM ENABLE EXCESSIVE P,Y, & R AUTO-ABORT INHIBIT OFF	0111 0010	162
14	COMM IU TAPE RECORDER PLAYBACK OFF	0000 1101	15
15	COMM ENABLE EXCESSIVE P,Y, & R AUTO-ABORT INHIBIT ON	0110 1111	157
16	COMM EDS LIFTOFF ENABLE RELAY RESET	0001 0001	21
17	COMM IU TAPE RECORDER RECORD OFF	0001 1111	37
18		0011 0011	63
19	COMM IU TAPE RECORDER PLAYBACK REVERSE ON	0101 0010	122
20	COMM INHIBIT EXCESSIVE ROLL AUTO-ABORT OFF	0110 1110	156
21	COMM FLIGHT CONTROL COMPUTER SWITCH POINT NO. 2	0100 0001	101
22	COMM FLIGHT CONTROL COMPUTER SWITCH POINT NO. 3	0101 0001	121
23	COMM TELEMETER CALIBRATION IN-FLIGHT CALIBRATE	0010 0010	42
24	COMM TELEMETER CALIBRATION STOP IN-FLIGHT CALIBRATE	0001 0010	22
25		0011 1101	75

REVISIONS			
SYM	DESCRIPTION	DATE	APPROVAL

ATTACHMENT "B"

26	COMM FLIGHT CONTROL COMPUTER SWITCH POINT NO. 1	0111	1101	175
27	COMM FLIGHT CONTROL COMPUTER SWITCH POINT NO. 9	0101	1101	135
28	COMM S-IVB RESTART ALERT	0111	1100	174
29	COMM RATE GYROS HIGH RATE ON	0011	1100	74
30		0000	0011	3
31	COMM FLIGHT CONTROL COMPUTERS S-IVB BURN MODE ON	0010	0011	43
32		0100	0011	103
33	COMM SWITCH ENGINE POSITION CONTROL FROM S-IC TO S-II	0001	1100	34
34	COMM EXCESSIVE ROLL AUTO-ABORT INHIBIT ON	0100	1111	117
35	COMM S-IC ENGINE OUT AUTO-ABORT INHIBIT	0001	1110	36
36	COMM LAUNCH ESCAPE TOWER JETTISON "B"	0011	1110	76
37	COMM L/V -S/C SEPARATION SEQUENCE START	0000	0001	1
38	COMM ENABLE LAUNCH VEHICLE ENGINES EDS CUTOFF	0011	0001	61
39	COMM IU TAPE RECORDER RECORD ON	0000	1111	17
40	COMM IU TAPE RECORDER PLAYBACK ON	0010	1111	57
41	COMM INHIBIT EXCESSIVE P,Y, & R AUTO-ABORT OFF	0100	1110	116
42	COMM ENABLE EXCESSIVE ROLL AUTO-ABORT INHIBIT OFF	0101	1110	136
43	COMM S-IVB ULLAGE THRUST PRESENT ON	0111	1110	176
44	COMM FCC SWITCH POINT NO. 5	0011	0010	62
45				
46	COMM S-IVB ULLAGE THRUST PRESENT OFF	0100	0010	102
47	COMM FCC SWITCH POINT NO. 8	0110	1101	155
48	COMM S-II ENGINE OUT INDICATION ENABLE "B" ON	0010	1100	54
49				
50	COMM INHIBIT EXCESSIVE ROLL AUTO-ABORT ON	0111	0001	161
51	COMM S-IC ENGINE OUT AUTO-ABORT INHIBIT ENABLE	0000	1110	16
52	COMM LET JETTISON "A"	0010	1110	56

REVISIONS			
SYM	DESCRIPTION	DATE	APPROVAL

ATTACHMENT "B"

53				
54	COMM C-BAND TRANSPONDER NO. 1 & NO. 2 ON	0111	0100	164
55	COMM INHIBIT C-BAND TRANSPONDER NO. 1	0110	0100	144
56	COMM INHIBIT C-BAND TRANSPONDER NO. 2	0101	0100	124
60	SWITCH PCM TO LOW GAIN ANTENNA (FAIL SAFE)	0101	1011	133
62	SWITCH PCM TO HIGH GAIN ANTENNA	0100	1010	112
63	SWITCH CCS TO HIGH GAIN ANTENNA (FAIL SAFE)	0000	0111	007
65	SWITCH CCS TO LOW GAIN ANTENNA	0010	1010	052
74	COMM FCC S-IVB BURN MODE "B" ON	0000	0100	004
75	COMM FCC S-IVB BURN MODE "B" OFF	0001	0100	024
98	COMM AZUSA X-PONDER POWER OFF	0100	0100	104
107	COMM WATER COOLANT VALVE OPEN	0110	0101	145
108	COMM WATER COOLANT VALVE CLOSED	0100	0101	105
109	SENSOR BIAS ON	0001	0101	025
110	COOLING SYSTEM ELECTRONIC ASSY PWR OFF	0011	0100	064
112	COMM MEASURING RACK POWER OFF	0100	1011	113

MSFC FORM 422 (VERTICAL) (AUGUST 1960)

NOTICE—When Government drawings, specifications, or other data are used for any purpose other than in connection with a definitely related Government procurement operation, the United States Government thereby incurs no responsibility nor obligation whatsoever; and the fact that the Government may have formulated, furnished, or in any way supplied the said drawings specifications or other data is not to be regarded by implication or otherwise as in any manner licensing the holder or any other person or corporation, or conveying any rights or permission to manufacture, use, or sell any patented invention that may in any way be related thereto.

APPLICATION		PART No.	M F	REVISIONS			
NEXT ASSY	USED ON			SYM	DESCRIPTION	DATE	APPROVAL

AS-503

PROGRAM VERIFICATION

POWER ON, OFF AND/OR REDUNDANCY (FT04)

73V1402

UNLESS OTHERWISE SPECIFIED DIMENSIONS ARE IN INCHES TOLERANCES ON: FRACTIONS DECIMALS ANGLES	ORIGINAL DATE OF DRAWING 7/19/68 DRAFTSMAN / CHECKER TRACER / CHECKER ENGINEER / ENGINEER	POWER ON, OFF AND/OR REDUNDANCY (FT04) AS-503	GEORGE C. MARSHALL SPACE FLIGHT CENTER NATIONAL AERONAUTICS AND SPACE ADMINISTRATION HUNTSVILLE, ALABAMA
MATERIAL	SUBMITTED E. N. Bryan E. N. BRYAN		
HEAT TREATMENT			
FINAL PROTECTIVE FINISH	APPROVED R. A. Drakey R. A. DRAKEY	SCALE UNIT WT	DWG SIZE A 73V1402 SHEET 1 OF 12

REVISIONS			
SYM	DESCRIPTION	DATE	APPROVAL

POWER ON, OFF AND/OR REDUNDANCY (FT04)

1.0 SCOPE

THIS PROCEDURE WILL VERIFY THE GUIDANCE SYSTEM TEST PROGRAM "POWER ON, OFF AND/OR REDUNDANCY (FT04)".

2.0 APPLICABLE GOVERNMENT FURNISHED DOCUMENTS

DRAWINGS	
AESS LVDA INTERFACE	50M36401
AESS INSTRUMENT UNIT ESE SATURN V	40M14490
INSTRUMENT UNIT ELECTRICAL SCHEMATICS	40M33221
DOCUMENTS	
IP & C S-IU-503	6009048
TEST PROGRAM SPECIFICATIONS SATURN V LAUNCH COMPUTER COMPLEX AS-503	67-F11-0008
PRELAUNCH CHECKOUT SPECIFICATIONS AND CRITERIA FOR S-IU-503	
OPERATOR REFERENCE MANUAL FOR SLCC PROGRAMMING SYSTEM	68-F11-0003

3.0 GENERAL NOTES

FT04 WILL BE ENTERED FROM KEYBOARD IN ACCORDANCE WITH THE IBM OPERATOR REFERENCE MANUAL. ALL PROGRAM OPTIONS WILL BE EXERCISED AND HARDWARE RESPONSE TO COMPUTER STIMULI WILL BE MONITORED.

4.0 PREREQUISITES

NONE

REVISIONS			
SYM	DESCRIPTION	DATE	APPROVAL

POWER ON, OFF AND/OR REDUNDANCY (FT04)

5.0 PROCEDURE

5.1 VERIFY THAT THE INSTRUMENT UNIT IS POWERED DOWN.

5.2 VERIFY THAT LVDA (603A29) AND LVDC (603A28) STAGE INTERCONNECTING CABLES ARE INSTALLED ACCORDING TO IU CID (40M33080).

5.3 VERIFY THAT POWER SWITCH (S1) ON THE GCP (601-608A13) IS IN THE "OFF" POSITION.

5.4 NOTIFY POWER ROOM TO CLOSE THE IU CIRCUIT BREAKERS AND PLACE THE +6D100 AND +6D200 BACKUP BATTERIES ON LINE.

5.5 START THE +6D100 AND +6D200 POWER SUPPLIES.

5.6 PLACE THE +6D100 AND +6D200 OUTPUT POWER SWITCHES TO THE "ON" POSITION.

5.7 PLACE THE +6D100 AND +6D200 BACKUP BATTERY ENABLE SWITCHES TO THE "ON" POSITION AND VERIFY BACKUP BATTERY ENABLED INDICATIONS ON EVENTS DISPLAY PANEL.

5.8 POWER THE INSTRUMENT UNIT UNTIL THE "GROUND POWER INDICATION IS RECEIVED.

5.9 VERIFY THAT GSCU IS ON.

5.10 ADJUST +6D100 AND +6D200 REMOTE VOLTAGE METERS TO READ 28V (+2,-0) VIA THE VOLTAGE INCREASE/DECREASE SWITCHES.

5.11 VERIFY ESE/LVDA SWITCH IN ESE POSITION.

5.12 ISSUE A SWITCH SELECTOR REGISTER TEST FOR THE IU AND VERIFY THE REGISTER TEST INDICATION.

5.13 REQUEST MLF COMPUTER ENGINEERING TO VERIFY THAT COMPUTER PERIPHERAL EQUIPMENT IS READY TO SUPPORT.

5.14 REQUEST TEST CONDUCTOR TO VERIFY THAT LCC & MLF DDAS IS IN "RECEIVE".

5.15 REQUEST THAT S-IVB STAGE APPLY POWER UNTIL "READY FOR POWER TRANSFER" INDICATION IS RECEIVED.

REVISIONS			
SYM	DESCRIPTION	DATE	APPROVAL

5.0 PROCEDURE (Continued)

5.16 REQUEST DDAS TO SUPPLY MEASUREMENT BUSSES +26D810 and +26D910 FROM LCC DRS 601-1459A2A32 AND LCC DRS 601-1458A32.

5.17 REQUEST THE FOLLOWING SIGNALS FROM THE DDAS DIGITAL SIGNAL SIMULATOR. (CALIBRATE METERS FOR FULL AND HALF SCALE).

MEAS. NO.	METER	ADJUST
VM 28-603 (CP1A0-22-05-00)	-20V (M1)	R1, R2
VM 27-603 (CP1A0-22-04-00)	-3V (M2)	R3, R4
VM 26-603 (CP1A0-22-03-00)	+6V No. 2 (M3)	R5, R6
VM 29-603 (CP1A0-22-07-00)	+6V No. 1 (M4)	R7, R8
VM 25-603 (CP1A0-22-02-00)	+12V (M5)	R9, R10
VM 24-603 (CP1A0-22-01-00)	+20V (M6)	R11, R12
VM 54-603 (CP1A0-01-09-00)	LVDC TEMP NO. 2 (M7)	R13, R14
VC 53-603 (DP1A0-04-06-00)	LVDC TEMP NO. 1 (M8)	R15, R16
VC 53-603 (DP1A0-04-08-00)	LVDA TEMP +20V (M9)	R17, R18
VC 56-603 (DP1A0-01-01-00)	LVDA TEMP +20V	R19, R20

5.18 PLACE POWER ON SWITCH (S1) AT GCP 601-608A13 TO "AUTO" POSITION.

5.19 PLACE SWITCH SELECTOR INHIBIT SWITCH (S15) IN THE "OFF" POSITION.

REVISIONS			
SYM	DESCRIPTION	DATE	APPROVAL

5.0 PROCEDURES (Continued)

5.20 AT SANDERS DISPLAY CONSOLE NO. 2 KEY 7, ENTER LVDC/LVDA POWER ON OFF, AND/OR REDUNDANCY (FT04) IN ACCORDANCE WITH IBM OPERATOR REFERENCE MANUAL. OBTAIN THE FOLLOWING OPTIONS:

a. LVDC POWER ON OR OFF.

b. POWER SUPPLY REDUNDANCY.

c. TMR OUTPUT DRIVERS

d. TMR CHANNEL SWITCHING.

e. GCO LINE SELECTION.

f. ENABLE SPECIAL LOADER.

5.21 MONITOR AND VERIFY MODE CODES ON GCP 601-608A13 FOR THE LVDC ROUTINES IN THE FOLLOWING OPTIONS.

a. TMR OUTPUT DRIVER TEST

1. DISCRETE OUTPUT	MODE CODE 31 MDI 735, 733, - ON
2. SWITCH SELECTOR	MODE CODE 432 MDI 736, 735, 734, - ON
3. FORCE BEGIN	MODE CODE 532 MDI 737, 735, 734, - ON
4. CIU READ	MODE CODE 43 MDI 736, 735, - ON

b. TMR CHANNEL SWITCHING

1. VERIFY AND PREPARE TO LOAD	MODE CODE 51 MDI 737, 733, - ON
2. LOAD	MODE CODE 521 MDI 737, 734, 733, - ON
3. SWITCH SELECTOR	MODE CODE 432 MDI 736, 735, 734, - ON
4. DISCRETE OUTPUT	MODE CODE 31 MDI 735, 733, - ON
5. LADDER ERROR	MODE CODE 4 MDI 736 - ON
6. DISCRETE INPUT	MODE CODE 3 MDI 735, - ON
7. MODE SORT	MODE CODE 0

REVISIONS			
SYM	DESCRIPTION	DATE	APPROVAL

5.22 DURING FT04 VERIFICATION, THE FOLLOWING MDO'S AND MDI'S WILL BE UTILIZED. MDI'S CAN BE VERIFIED BY DEE-6 PRINTOUTS AND VISUAL INDICATIONS AT THE GUIDANCE CONTROL PANEL 601-608A13.

SIGNAL	NOMENCLATURE	B202-623A1
MDO 964 MDI 720	GCOA	J43/EE
MDO 965 MDI 721	GCOB	J43/DD
MDO 966 MDI 722	GCOC	J43/s
MDO 967 MDI 723	GCOD	J43/
MDO 968	GCOE	J43/D
MDO 969	GCOF	J43/
MDO 970	GCOG	J43/a
MDO 971	GCOR	J43/t
MDO 972 MDI 729	POWER ON	J43/x
MDO 976 MDI 728	HALT RELEASE HALT	J43/v
MDO 973	MRWOPO	N/
MDO 975	MEMORY SHORT DISABLE	N/
MDI 732	MEMORY SHORT	J43/g
MDI 731	MEMORY CONNECT	J43/M
MDI 730	MEMORY RELEASE	J43/w

ATTACHMENT "A"

REVISIONS			
SYM	DESCRIPTION	DATE	APPROVAL

24	53	737, 735	MINOR LOOP, SWITCH SELECTOR AND REAL TIME COUNTER TESTS ENTRY
25	531	737, 735, 733	UNASSIGNED
30	540	737, 736	PREPARE TO LAUNCH SIM. FLT. WITH PLATFORM
35	5431	737, 736, 735, 733	COMMAND RECEIVER LINKAGE ROUTINE
40	60	738	POWER UP AND INITIALIZE
52	642	738, 736, 734	UNASSIGNED
53	6421	738, 736, 734, 733	(MINOR LOOP, SWITCH SELECTOR, REAL TIME COUNTER TEST ROUTINE)
54	643	738, 736, 735	(LOAD ROUTINE)
55	6431	738, 736, 735, 733	(MEMORY ERROR TEST ROUTINE)
57	64321	738, 736, 735, 734, 733	(SECTOR DUMP ROUTINE)
60	650	738, 737	(EXERCISE ATTITUDE COMMAND ROUTINE MODE 2)
62	652	738, 737, 734	(SWITCH SELECTOR ROUTINE)
63	6521	738, 737, 734, 733	(COMPUTER INTERFACE UNIT READ ROUTINE)
64	653	738, 737, 735	(EXERCISE ATTITUDE COMMAND ROUTINE MODE 1)
65	6531	738, 737, 735, 733	(PREPARE TO LAUNCH ROUTINE)
67	65321	738, 737, 735, 734, 733	(LADDER ERROR TEST ROUTINE)
71	6541	738, 737, 736, 733	(G & C STEERING TEST ROUTINE)
72	6542	738, 737, 736, 734	(DISCRETE OUTPUT ROUTINE)
73	65421	738, 737, 736, 734, 733	(DISCRETE INPUT ROUTINE)
74	6543	738, 737, 736, 735	(GIMBAL ANGLE MONITOR ROUTINE)
75	65431	738, 737, 736, 735, 733	(ACCELEROMETER PULSE COUNT ROUTINE)
76	65432	738, 737, 736, 735, 734	(PROGRAM CONTINUE ROUTINE)
(26)	532	737, 735, 734	FORCED BEGIN AND INITIALIZE ROUTINE ENTRY
(27)	5321	737, 735, 734, 733	SYNC RESET SUBROUTINE OVERTIME MESSAGE

ATTACHMENT "A"

SYM	DESCRIPTION	DATE	APPROVAL
REVISIONS			

(34)	543	737, 736, 735	EXERCISE ATTITUDE COMMAND ROUTINE ERROR --- INITIAL CONVERTER NOT STILL SELECTED
36	5432	737, 736, 735, 734	PREPARE TO LAUNCH --- COMMAND TO COMP RE GIVEN AZIMUTH TO STORE AZIMUTH VALUE
(37)	54321	737, 736, 735, 734, 733	RESERVED FOR SIM. FLIGHT
(42)	62	738, 734	RESERVED FOR FLIGHT
(43)	621	738, 734, 733	EXERCISE ATTITUDE COMMAND TEST MAXIMUM ATTAINED IN ONE OR MORE AXES.
(45)	631	738, 735, 733	READ INPUT DATA SUBROUTINE OVERTIME MESSAGE
(46)	632	738, 735, 734	EXERCISE ATTITUDE COMMAND TEST DRIVING
(47)	6321	738, 735, 734, 733	ERROR MONITOR SUBROUTINE ENTRY
(50)	640	738, 736	ABORT TEST STATUS CODE
(51)	641	738, 736, 733	FORCED BEGIN ROUTINE ERROR---EMR NON-ZERO
(56)	6432	738, 736, 735, 734	VERIFY AND PREPARE TO LOAD ROUTINE TRYING TO LOAD WITHOUT FIRST LOADING PREVIOUS INFORMATION (IF ANY)
(66)	6532	738, 737, 735, 734	ISSUED ON COMPLETION OR REPEATABLE FLT. SIM. RUN
(70)	6540	738, 737, 736	RESERVE FOR SIM. FLIGHT
77	654321	738, 737, 736, 735, 734, 733	FORCE THE EMR SUBROUTINE TO RETURN TO FORCED BEGIN FBDA
31	541	737, 735, 733	UNASSIGNED
32	542	737, 735, 734	LVDC TM TEST
33	5421	737, 736, 734, 733	UNASSIGNED
41	61	738, 733	UNASSIGNED
44	63	738, 735	UNASSIGNED
61	651	738, 737, 733	UNASSIGNED

ATTACHMENT "A"

REVISIONS			
SYM	DESCRIPTION	DATE	APPROVAL

LVDA STATUS CODE CONVERSION CHART

LVDA	MODE	MDI	SOURCE STATEMENT
00	00	NONE	MODE SORT ROUTINE GROUND ENTRY
01	01	733	(PROGRAM CONTINUE ROUTINE)
02	02	734	ACCELEROMETER PULSE COUNT ROUTINE ENTRY
03	21	734, 733	GIMBAL ANGLE MONITOR ROUTINE ENTRY
04	03	735	DISCRETE INPUT ROUTINE ENTRY
05	31	735, 733	DISCRETE OUTPUT ROUTINE ENTRY
06	32	735, 734	G & C STEERING TEST ENTRY
07	321	735, 734, 733	DOM TEST ROUTINE ENTRY
10	40	736	LADDER ERROR TEST ROUTINE ENTRY
11	41	736, 733	PREPARE TO LAUNCH WITHOUT A PLATFORM
12	42	736, 734	PREPARE TO LAUNCH WITH A PLATFORM
13	421	736, 734, 733	EXERCISE ATTITUDE COMMAND ROUTINE MODE 1 ENTRY
14	43	736, 735	COMPUTER INTERFACE UNIT READ ROUTINE
15	431	736, 735, 733	SWITCH SELECTOR ROUTINE ENTRY
16	432	736, 735, 734	SECTOR SUM CHECK ROUTINE ENTRY
17	4321	736, 735, 734, 733	EXERCISE ATTITUDE COMMAND ROUTINE MODE 2 ENTRY
20	50	737	SECTOR DUMP ROUTINE ENTRY
21	51	737, 733	VERIFY AND PREPARE TO LOAD ROUTINE ENTRY
22	52	737, 734	MEMORY ERROR TEST
23	521	737, 734, 733	LOAD ROUTINE ENTRY

REVISIONS			
SYM	DESCRIPTION	DATE	APPROVAL

ATTACHMENT "B"

CHNL	OUTPUT FUNCTION	SIGNAL CODE BINARY	OCTAL
1	COMM Q-BALL POWER OFF	0111 1111	177
2	COMM INHIBIT EXCESSIVE P, Y, & R AUTO-ABORT ON	0101 1111	137
3	COMM IU TAPE RECORDER PLAYBACK REVERSE OFF	0110 0010	142
4	COMM FLIGHT CONTROL COMPUTER SWITCH POINT No. 4	0110 0001	141
5	COMM FLIGHT CONTROL COMPUTER SWITCH POINT No. 6	0000 0010	2
6		0010 1101	55
7	COMM FLIGHT CONTROL COMPUTER SWITCH POINT No. 7	0001 1101	35
8		0011 1111	77
9	COMM S-IVB ENGINE OUT INDICATE ENABLE "A" ON	0001 0011	23
10		0110 0011	143
11	COMMAND S-IVB ENGINE OUT INDICATE ENABLE "B" ON	0111 0011	163
12	COMM FLIGHT CONTROL COMPUTER S-IVB BURN MODE OFF	0100 1101	115
13	COMM ENABLE EXCESSIVE P, Y, & R AUTO-ABORT IHIBIT OFF	0111 0010	162
14	COMM IU TAPE RECORDER PLAYBACK OFF	0000 1101	15
15	COMM ENABLE EXCESSIVE P, Y, & R AUTO-ABORT IHIBIT ON	0110 1111	157
16	COMM EDS LIFTOFF ENABLE RELAY RESET	0001 0001	21
17	COMM IU TAPE RECORDER RECORD OFF	0001 1111	37
18		0011 0011	63
19	COMM IU TAPE RECORDER PLAYBACK REVERSE ON	0101 0010	122
20	COMM INHIBIT EXCESSIVE ROLL AUTO-ABORT OFF	0110 1110	156
21	COMM FLIGHT CONTROL COMPUTER SWITCH POINT No. 2	0100 0001	101
22	COMM FLIGHT CONTROL COMPUTER SWITCH POINT No. 3	0101 0001	121
23	COMM TELEMETER CALIBRATION IN-FLIGHT CALIBRATE	0010 0010	42
24	COMM TELEMETER CALIBRATION STOP IN-FLIGHT CALIBRATE	0001 0010	22
25		0011 1101	75

ATTACHMENT "B"

REVISIONS			
SYM	DESCRIPTION	DATE	APPROVAL

26	COMM FLIGHT CONTROL COMPUTER SWITCH POINT No. 1	0111	1101	175
27	COMM FLIGHT CONTROL COMPUTER SWITCH POINT NO. 9	0101	1101	135
28	COMM S-IVB RESTART ALERT	0111	1100	174
29	COMM RATE GYROS HIGH RATE ON	0011	1100	74
30		0000	0011	3
31	COMM FLIGHT CONTROL COMPUTERS S-IVB BURN MODE ON	0010	0011	43
32		0100	0011	103
33	COMM SWITCH ENGINE POSITION CONTROL FROM S-IC TO S-II A	0001	1100	34
34	COMM EXCESSIVE ROLL AUTO-ABORT INHIBIT ON	0100	1111	117
35	COMM S-IC ENGINE OUT AUTO-ABORT INHIBIT	0001	1110	36
36	COMM SW S-IVB LOX TO S-II FUEL TANK PRESSURE IND ON	0011	1110	76
37	COMM SW S-IVB LOX TO S-II FUEL TANK PRESSURE IND RESET	0000	0001	1
38	COMM ENABLE LAUNCH VEHICLE ENGINES EDS CUTOFF	0011	0001	61
39	COMM IU TAPE RECORDER RECORD ON	0000	1111	17
40	COMM IU TAPE RECORDER PLAYBACK ON	0010	1111	57
41	COMM INHIBIT EXCESSIVE P, Y, & R AUTO-ABORT OFF	0100	1110	116
42	COMM ENABLE EXCESSIVE ROLL AUTO-ABORT INHIBIT OFF	0101	1110	136
43	COMM S-IVB ULLAGE THRUST PRESENT ON	0111	1110	176
44	COMM FCC SWITCH POINT No. 5	0011	0010	62
45				
46	COMM S-IVB ULLAGE THRUST PRESENT OFF	0100	0010	102
47	COMM FCC SWITCH POINT No. 8	0110	1101	155
48	COMM S-II ENGINE OUT INDICATION ENABLE "B" ON	0010	1100	54
49				
50	COMM INHIBIT EXCESSIVE ROLL AUTO-ABORT ON	0111	0001	161
51	COMM S-IC ENGINE OUT AUTO-ABORT INHIBIT ENABLE	0000	1110	16

ATTACHMENT "B"

SYM	DESCRIPTION	DATE	APPROVAL
	REVISIONS		

52	COMM LET JETTISON "A"	0010	1110	56
53				
54	COMM C-BAND TRANSPONDER NO. 1 & NO. 2 ON	0111	0100	164
55	COMM INHIBIT C-BAND TRANSPONDER NO. 1	0110	0100	144
56	COMM INHIBIT C-BAND TRANSPONDER NO. 2	0101	0100	124
60	SWITCH PCM TO LOW GAIN ANTENNA (FAIL SAFE)	0101	1011	133
62	SWITCH PCM TO HIGH GAIN ANTENNA	0100	1010	112
63	SWITCH CCS TO HIGH GAIN ANTENNA (FAIL SAFE)	0000	0111	007
65	SWITCH CCS TO LOW GAIN ANTENNA	0010	1010	052
74	COMM FCC S-IVB BURN MODE "B" ON	0000	0100	.004
75	COMM FCC S-IVB BURN MODE "B" OFF	0001	0100	024
98	COMM AZUSA X-PONDER POWER OFF	0100	0100	104
107	COMM WATER COLLANT VALVE OPEN	0110	0101	145
08	COMM WATER COOLANT VALVE CLOSED	0100	0101	105
109	SENSOR BIAS ON	0001	0101	025
110	COOLING SYSTEM ELECTRONIC ASSY PWR OFF	0011	0100	064
112	COMM MEASURING RACK POWER OFF	0100	1011	113

MSFC FORM 422 (VERTICAL) (AUGUST 1960)

NOTICE — When Government drawings, specifications, or other data are used for any purpose other than in connection with a definitely related Government procurement operation, the United States Government thereby incurs no responsibility nor obligation whatsoever; and the fact that the Government may have formulated, furnished, or in any way supplied the said drawings specifications or other data is not to be regarded by implication or otherwise as in any manner licensing the holder or any other person or corporation, or conveying any rights or permission to manufacture, use, or sell any patented invention that may in any way be related thereto.

APPLICATION		PART No.	MF	REVISIONS			
NEXT ASSY	USED ON			SYM	DESCRIPTION	DATE	APPROVAL

AS-503

PROGRAM VERIFICATION

LVDC/LVDA SWITCH SELECTOR INTERFACE (FT03)

73V1403

UNLESS OTHERWISE SPECIFIED DIMENSIONS ARE IN INCHES TOLERANCES ON: FRACTIONS DECIMALS ANGLES	ORIGINAL DATE OF DRAWING 7/19/68 DRAFTSMAN / CHECKER TRACER / CHECKER ENGINEER / ENGINEER	LVDC/LVDA SWITCH SELECTOR INTERFACE (FT03) AS-503	GEORGE C. MARSHALL SPACE FLIGHT CENTER NATIONAL AERONAUTICS AND SPACE ADMINISTRATION HUNTSVILLE, ALABAMA
MATERIAL	SUBMITTED E. N. Bryan E. N. BRYAN		
HEAT TREATMENT			
FINAL PROTECTIVE FINISH	APPROVED R. A. Drakey R. A. DRAKEY	SCALE / UNIT WT	DWG SIZE A 73V1403 SHEET 1 OF 11

REVISIONS			
SYM	DESCRIPTION	DATE	APPROVAL

LVDA/LVDC SWITCH SELECTOR INTERFACE TEST (FT03)

1.0 SCOPE

THIS PROCEDURE WILL VERIFY THE GUIDANCE SYSTEM TEST PROGRAM "LVDA/LVDC SWITCH SELECTOR INTERFACE TEST (FT03)".

2.0 APPLICABLE GOVERNMENT FURNISHED DOCUMENTS

DRAWINGS	
AESS LVDA INTERFACE	50M36401
AESS INSTRUMENT UNIT ESE SATURN V	40M14490
INSTRUMENT UNIT ELECTRICAL SCHEMATICS	40M33221
DOCUMENTS	
IP & C S-IU-503	6009048
TEST PROGRAM SPECIFICATIONS SATURN V LAUNCH COMPUTER COMPLEX AS-503	67-F11-0008
PRELAUNCH CHECKOUT SPECIFICATIONS AND CRITERIA FOR S-IU-503	68-257-0004
OPERATOR REFERENCE MANUAL FOR SLCC PROGRAMMING SYSTEM	68-F11-0003

3.0 GENERAL NOTES

FT03 will be entered from keyboard in accordance with the IBM Operator Reference Manual. All program options will be exercised and hardware response to computer stimuli will be monitored.

4.0 PREREQUISITES

None

REVISIONS			
SYM	DESCRIPTION	DATE	APPROVAL

LVDA/LVDC SWITCH SELECTOR INTERFACE TEST (FT03)

5.0 PROCEDURE

5.1 VERIFY THAT THE INSTRUMENT UNIT IS POWERED DOWN.

5.2 VERIFY THAT LVDA (603A29) AND LVDC (603A28) STAGE INTERCONNECTION CABLES ARE INSTALLED ACCORDING TO IU CID (40M33080).

5.3 VERIFY THAT POWER SWITCH (S1) ON THE GCP (601-608A13) IS IN THE "OFF" POSITION.

5.4 NOTIFY POWER ROOM TO CLOSE THE IU CIRCUIT BREAKERS AND PLACE THE +6D100 AND +6D200 BACKUP BATTERIES ON LINE.

5.5 START THE +6D100 AND +6D200 POWER SUPPLIES.

5.6 PLACE THE +6D100 AND +6D200 OUTPUT POWER SWITCHES TO THE "ON" POSITION.

5.7 PLACE THE +6D100 AND +6D200 BACKUP BATTERY ENABLE SWITCHES TO THE "ON" POSITION AND VERIFY BACKUP BATTERY ENABLED INDICATIONS ON EVENTS DISPLAY PANEL.

5.8 POWER THE INSTRUMENT UNIT UNTIL THE "GROUND POWER" INDICATION IS RECEIVED.

5.9 VERIFY THAT GSCU IS ON.

5.10 ADJUST +6D100 AND +6D200 REMOTE VOLTAGE METERS TO READ 28V(+2,-0) VIA THE VOLTAGE INCREASE/DECREASE SWITCHES.

5.11 VERIFY ESE/LVDA SWITCH IN ESE POSITION.

5.12 ISSUE A SWITCH SELECTOR REGISTER TEST FOR THE IU AND VERIFY THE REGISTER TEST INDICATION.

5.13 REQUEST MLF COMPUTER ENGINEERING TO VERIFY THAT COMPUTER PERIPHERAL EQUIPMENT IS READY TO SUPPORT.

5.14 REQUEST TEST CONDUCTOR TO VERIFY THAT LCC & MLF DDAS IS IN "RECEIVE".

5.15 REQUEST THAT S-IVB STAGE APPLY POWER UNTIL "READY FOR POWER TRANSFER" INDICATION IS RECEIVED.

5.16 PLACE "POWER ON" SWITCH (S1) AT GCP 601-608A13 TO AUTO POSITION.

5.17 ENTER FT04, POWER ON OPTION IN ACCORDANCE WITH 2-1 OF SECTION 3 OF THE IBM USER MANUAL.

5.18 VERIFY INHIBIT SWITCH (S15) IS IN THE "OFF" POSITION ON NETWORK PANEL 601-605A1. (VERIFY ABOVE FOR ALL STAGES).

REVISIONS			
SYM	DESCRIPTION	DATE	APPROVAL

5.19 REQUEST S-IC & S-II TO POWER UP UNTIL "READY FOR POWER XFER" INDICATION IS RECEIVED.

5.20 MANUALLY PERFORM SWITCH SELECTOR REGISTER TEST FOR ALL STAGES.

NOTE: PROCEED ONLY IF STEP 5.20 IS PERFORMED SUCCESSFULLY.

5.21 PLACE SWITCH (S5) IN "LVDA TEST" POSITION ON SWITCH SELECTOR PANEL 601-605A2.

NOTE: INFORM TEST CONDUCTOR THAT THE PROGRAM CAN NOT TOLERATE EXECUTION OF A SWITCH SELECTOR FUNCTION INITIATED BY SWITCH ACTION DURING PROGRAM OPERATION. IF A SWITCH SELECTOR FUNCTION IS SWITCH INITIATED, THE OPERATING SYSTEM WILL TERMINATE THE TEST TO ALLOW THE SWITCH ACTION TO BE HONORED.

5.22 AT SANDERS DISPLAY CONSOLE NO. 2 KEY 7, ENTER LVDC/LVDA SWITCH SELECTOR INTERFACE TEST PROGRAM (FT03) IN ACCORDANCE WITH THE IBM OPERATOR REFERENCE MANUAL. EXECUTION AND VERIFY LVDC/LVDA SWITCH SELECTOR INTERFACE TEST PROGRAM.

DURING EXECUTION OF FT03, AT GCP 601-608A13, MONITOR:

SWITCH SELECTOR ROUTINE MODE CODE 431
MDI 736, 735, 733 - ON

6.0 ERROR MESSAGE TEST

6.1 PLACE SWITCH (S5) IN "ESE" POSITION ON SWITCH SELECTOR PANEL 601-605A2. ENTER FT03 IN ACCORDANCE WITH STEP 5.22 AND VERIFY THE FOLLOWING ERROR MESSAGE:

**FT03-01
THE LVDA SWITCH SELECTOR ENABLE SWITCH IS NOT IN THE ON POSITION - MUST BE IN ON POSITION TO RUN TEST.

6.2 PLACE SWITCH (S5) IN "LVDA TEST" POSITION ON SWITCH SELECTOR PANEL 601-605A2 AND ENTER $PB TO RESTART.

6.3 WHEN INITIAL OPTIONS ARE DISPLAYED ENTER $PO TO SELECT AUTOMATIC OPTIONS.

6.4 WHEN AUTOMATIC OPTIONS ARE DISPLAYED, ENTER $P0000 AND VERIFY THE FOLLOWING ERROR MESSAGE:

**FT03-03
INVALID KEYBOARD INPUT - AUTO TEST OPTIONS WILL BE REDISPLAYED.

6.5 WHEN AUTOMATIC OPTIONS ARE DISPLAYED TERMINATE FT03 ($TERMFT03).

6.6 RECALL AND EXECUTE FT03.

REVISIONS			
SYM	DESCRIPTION	DATE	APPROVAL

6.7 WHEN INITIAL OPTIONS ARE DISPLAYED ENTER $P1 TO SELECT MANUAL OPTIONS.

6.8 WHEN MANUAL OPTIONS ARE DISPLAYED, ENTER $P020000 AND VERIFY THE FOLLOWING ERROR MESSAGE:

**FT03-04
INVALID KEYBOARD INPUT - MANUAL TEST OPTIONS WILL BE REDISPLAYED.

6.9 TERMINATE FT03.

REVISIONS			
SYM	DESCRIPTION	DATE	APPROVAL

ATTACHMENT "A"

LVDA STATUS CODE CONVERSION CHART

LVDA	MODE	MDI	SOURCE STATEMENT
00	00	NONE	MODE SORT ROUTINE GROUND ENTRY
01	01	733	(PROGRAM CONTINUE ROUTINE)
02	02	734	ACCELEROMETER PULSE COUNT ROUTINE ENTRY
03	21	734, 733	GIMBAL ANGLE MONITOR ROUTINE ENTRY
04	03	735	DISCRETE INPUT ROUTINE ENTRY
05	31	735, 733	DISCRETE OUTPUT ROUTINE ENTRY
06	32	735, 734	G & C STEERING TEST ENTRY
07	321	735, 734, 733	DOM TEST ROUTINE ENTRY
10	40	736	LADDER ERROR TEST ROUTINE ENTRY
11	41	736, 733	PREPARE TO LAUNCH WITHOUT A PLATFORM
12	42	736, 734	PREPARE TO LAUNCH WITH A PLATFORM
13	421	736, 734, 733	EXERCISE ATTITUDE COMMAND ROUTINE MODE 1 ENTRY
14	43	736, 735	COMPUTER INTERFACE UNIT READ ROUTINE ENTRY
15	431	736, 735, 733	SWITCH SELECTOR ROUTINE ENTRY
16	432	736, 735, 734	SECTOR SUM CHECK ROUTINE ENTRY
17	4321	736, 735, 734, 733	EXERCISE ATTITUDE COMMAND ROUTINE MODE 2 ENTRY
20	50	737	SECTOR DUMP ROUTINE ENTRY
21	51	737, 733	VERIFY AND PREPARE TO LOAD ROUTINE ENTRY
22	52	737, 734	MEMORY ERROR TEST
23	521	737, 734, 733	LOAD ROUTINE ENTRY

REVISIONS			
SYM	DESCRIPTION	DATE	APPROVAL

ATTACHMENT "A"

24	53	737, 735	MINOR LOOP, SWITCH SELECTOR AND REAL TIME COUNTER TESTS ENTRY
25	531	737, 735, 733	UNASSIGNED
30	540	737, 736	PREPARE TO LAUNCH SIM. FLT. WITH A PLATFORM
35	5431	737, 736, 735, 733	COMMAND RECEIVER LINKAGE ROUTINE
40	60	738	POWER UP AND INITIALIZE
52	642	738, 736, 734	UNASSIGNED
53	6421	738, 736, 734, 733	(MINOR LOOP, SWITCH SELECTOR, REAL TIME COUNTER TEST ROUTINE)
54	643	738, 736, 735	(LOAD ROUTINE)
55	6431	738, 736, 735, 733	(MEMORY ERROR TEST ROUTINE)
57	64321	738, 736, 735, 734, 733	(SECTOR DUMP ROUTINE)
60	650	738, 737	(EXERCISE ATTITUDE COMMAND ROUTINE MODE 2)
62	652	738, 737, 734,	(SWITCH SELECTOR ROUTINE)
63	6521	738, 737, 734, 733	(COMPUTER INTERFACE UNIT READ ROUTINE)
64	653	738, 737, 735	(EXERCISE ATTITUDE COMMAND ROUTINE MODE 1)
65	6531	738, 737, 735, 733	(PREPARE TO LAUNCH ROUTINE)
67	65321	738, 737, 735, 734, 733	(LADDER ERROR TEST ROUTINE)
71	6541	738, 737, 736, 733	(G & C STEERING TEST ROUTINE)
72	6542	738, 737, 736, 734	(DISCRETE OUTPUT ROUTINE)
73	65421	738, 737, 736, 734, 733	(DISCRETE INPUT ROUTINE)
74	6543	738, 737, 736, 735	(GIMBAL ANGLE MONITOR ROUTINE)
75	65431	738, 737, 736, 735, 733	(ACCELEROMETER PULSE COUNT ROUTINE)
76	65432	738, 737, 736, 735, 734	(PROGRAM CONTINUE ROUTINE)
(26)	532	737, 735, 734	FORCED BEGIN AND INITIALIZE ROUTINE ENTRY
(27)	5321	737, 735, 734, 733	SYNC RESET SUBROUTINE OVERTIME MESSAGE

ATTACHMENT "A"

SYM	DESCRIPTION	DATE	APPROVAL
REVISIONS			

(34)	543	737, 736, 735	EXERCISE ATTITUDE COMMAND ROUTINE ERROR --- INITIAL CONVERTER NOT STILL SELECTED
36	5432	737, 736, 735, 734	PREPARE TO LAUNCH---COMMAND TO COMPARE GIVEN AZIMUTH TO STORED AZIMUTH VALUE
(37)	54321	737, 736, 735, 734, 733	RESERVE FOR SIM. FLIGHT
(42)	62	738, 734	RESERVED FOR FLIGHT
(43)	621	738, 734, 733	EXERCISE ATTITUDE COMMAND TEST-MAXIMUM ATTAINED ON ONE OR MORE AXES
(45)	631	738, 735, 733	READ INPUT DATA SUBROUTINE OVERTIME MESSAGE
(46)	632	738, 735	EXERCISE ATTITUDE COMMAND TEST DRIVING TOWARD NULL
(47)	6321	738, 735, 734, 733	ERROR MONITOR SUBROUTINE ENTRY
(50)	640	738, 736	ABORT TEST STATUS CODE
(51)	641	738, 736, 733	FORCED BEGIN ROUTINE ERROR --- EMR NON-ZERO
(56)	6432	738, 736, 735, 734	VERIFY AND PREPARE TO LOAD ROUTINE TRYING TO LOAD WITHOUT FIRST LOADING PREVIOUS INFORMATION (IF ANY)
(66)	6532	738, 737, 735, 734	ISSUED ON COMPIETION OF REPEATABLE FLT. SIM. RUN
(70)	6540	738, 737, 736	RESERVE FOR SIM. FLIGHT
77	654321	738, 737, 736, 735, 734, 733	FORCES THE EMR SUBROUTINE TO RETURN TO FORCED BEGIN FBDA
31	541	737, 736, 733	UNASSIGNED
32	542	737, 736, 734	LVDC TM TEST
33	5421	737, 736, 734, 733	UNASSIGNED
41	61	738, 733	UNASSIGNED
44	63	738, 735	UNASSIGNED
61	651	738, 737, 733	UNASSIGNED

REVISIONS			
SYM	DESCRIPTION	DATE	APPROVAL

ATTACHMENT "B"

CHNL	OUTPUT FUNCTION	SIGNAL CODE BINARY	OCTAL
1	COMM Q-BALL POWER OFF	0111 1111	177
2	COMM INHIBIT EXCESSIVE P,Y, & R AUTO-ABORT ON	0101 1111	137
3	COMM IU TAPE RECORDER PLAYBACK REVERSE OFF	0110 0010	142
4	COMM FLIGHT CONTROL COMPUTER SWITCH POINT NO. 4	0110 0001	141
5	COMM FLIGHT CONTROL COMPUTER SWITCH POINT NO. 6	0000 0010	2
6		0010 1101	55
7	COMM FLIGHT CONTROL COMPUTER SWITCH POINT No. 7	0001 1101	35
8		0011 1111	77
9	COMM S-IVB ENGINE OUT INDICATE ENABLE "A" ON	0001 0011	23
10		0110 0011	143
11	COMMAND S-IVB ENGINE OUT INDICATE ENABLE "B" ON	0111 0011	163
12	COMM FLIGHT CONTROL COMPUTER S-IVB BURN MODE OFF	0100 1101	115
13	COMM ENABLE EXCESSIVE P,Y, & R AUTO-ABORT INHIBIT OFF	0111 0010	162
14	COMM IU TAPE RECORDER PLAYBACK OFF	0000 1101	15
15	COMM ENABLE EXCESSIVE P, Y, & R AUTO-ABORT INHIBIT ON	0110 1111	157
16	COMM EDS LIFTOFF ENABLE RELAY RESET	0001 0001	21
17	COMM IU TAPE RECORDER RECORD OFF	0001 1111	37
18		0011 0011	63
19	COMM IU TAPE RECORDER PLAYBACK REVERSE ON	0101 0010	122
20	COMM INHIBIT EXCESSIVE ROLL AUTO-ABORT OFF	0110 1110	156
21	COMM FLIGHT CONTROL COMPUTER SWITCH POINT NO. 2	0100 0001	101
22	COMM FLIGHT CONTROL COMPUTER SWITCH POINT NO. 3	0101 0001	121
23	COMM TELEMETER CALIBRATION IN-FLIGHT CALIBRATE	0010 0010	42
24	COMM TELEMETER CALIBRATION STOP IN-FLIGHT CALIBRATE	0001 0010	22
25		0011 1101	75

ATTACHMENT "B"

SYM	REVISIONS DESCRIPTION	DATE	APPROVAL

26	COMM FLIGHT CONTROL COMPUTER SWITCH POINT NO. 1	0111	1101	175
27	COMM FLIGHT CONTROL COMPUTER SWITCH POINT NO. 9	0101	1101	135
28	COMM S-IVB RESTART ALERT	0111	1100	17
29	COMM RATE GYROS HIGH RATE ON	0011	1100	7
30		0000	0011	3
31	COMM FLIGHT CONTROL COMPUTERS S-IVB BURN MODE ON	0010	0011	3
32		0100	0011	103
33	COMM SWITCH ENGINE POSITION CONTROL FROM S-IC TO S-II A	0001	1100	3
34	COMM EXCESSIVE ROLL AUTO-ABORT INHIBIT ON	0100	1111	117
35	COMM S-IC ENGINE OUT AUTO-ABORT INHIBIT	0001	1110	36
36	COMM SW S-IVB LOX TO S-II FUEL TANK PRESSURE IND ON	0011	1110	76
37	COMM SW S-IVB LOX TO S-II FUEL TANK PRESSURE IND RESET	0000	0001	1
38	COMM ENABLE LAUNCH VEHICLE ENGINES EDS CUTOFF	0011	0001	61
39	COMM IU TAPE RECORDER RECORD ON	0000	1111	17
40	COMM IU TAPE RECORDER PLAYBACK ON	0010	1111	57
41	COMM INHIBIT EXCESSIVE P,Y, & R AUTO-ABORT OFF	0100	1110	116
42	COMM ENABLE EXCESSIVE ROLL AUTO-ABORT INHIBIT OFF	0101	1110	136
43	COMM S-IVB ULLAGE THRUST PRESENT ON	0111	1110	176
44	COMM FCC SWITCH POINT NO. 5	0011	0010	62
45				
46	COMM S-IVB ULLAGE THRUST PRESENT OFF	0100	0010	102
47	COMM FCC SWITCH POINT NO. 8	0110	1101	155
48	COMM S-II ENGINE OUT INDICATION ENABLE "B" ON	0010	1100	54
49				
50	COMM INHIBIT EXCESSIVE ROLL AUTO-ABORT ON	0111	0001	161
51	COMM S-IC ENGINE OUT AUTO-ABORT INHIBIT ENABLE	0000	1110	16
52	COMM LET JETTISON "A"	0010	1110	56

REVISIONS			
SYM	DESCRIPTION	DATE	APPROVAL

ATTACHMENT "B"

53			
54	COMM C-BAND TRANSPONDER NO. 1 & NO. 2 ON	0111 0100	164
55	COMM INHIBIT C-BAND TRANSPONDER NO. 1	0110 0100	144
56	COMM INHIBIT C-BAND TRANSPONDER NO. 2	0101 0100	124
60	SWITCH PCM TO LOW GAIN ANTENNA (FAIL SAFE)	0101 1011	133
62	SWITCH PCM TO HIGH GAIN ANTENNA	0100 1010	112
63	SWITCH CCS TO HIGH GAIN ANTENNA (FAIL SAFE)	0000 0111	007
65	SWITCH CCS TO LOW GAIN ANTENNA	0010 1010	052
74	COMM FCC S-IVB BURN MODE "B" ON	0000 0100	004
75	COMM FCC S-IVB BURN MODE "B" OFF	0001 0100	024
98	COMM AZUSA X-PONDER POWER OFF	0100 0100	104
107	COMM WATER COOLANT VALVE OPEN	0110 0101	145
108	COMM WATER COOLANT VALVE CLOSED	0100 0101	105
109	SENSOR BIAS ON	0001 0101	025
110	COOLING SYSTEM ELECTRONIC ASSY PWR OFF	0011 0100	064
112	COMM MEASURING RACK POWER OFF	0100 1011	113

NOTICE — When Government drawings, specifications, or other data are used for any purpose other than in connection with a definitely related Government procurement operation, the United States Government thereby incurs no responsibility nor obligation whatsoever; and the fact that the Government may have formulated, furnished, or in any way supplied the said drawings specifications or other data is not to be regarded by implication or otherwise as in any manner licensing the holder or any other person or corporation, or conveying any rights or permission to manufacture, use, or sell any patented invention that may in any way be related thereto.

APPLICATION		PART No.	M F	REVISIONS			
NEXT ASSY	USED ON			SYM	DESCRIPTION	DATE	APPROVAL

AS-503

PROGRAM VERIFICATION

DATA LOAD AND/OR VERIFY (FT05)

73V1404

UNLESS OTHERWISE SPECIFIED DIMENSIONS ARE IN INCHES TOLERANCES ON: FRACTIONS DECIMALS ANGLES	ORIGINAL DATE OF DRAWING 7/19/68	DATA LOAD AND/OR VERIFY (FT05) AS-503	GEORGE C. MARSHALL SPACE FLIGHT CENTER NATIONAL AERONAUTICS AND SPACE ADMINISTRATION HUNTSVILLE, ALABAMA
MATERIAL	DRAFTSMAN / CHECKER TRACER / CHECKER ENGINEER / ENGINEER		
HEAT TREATMENT	SUBMITTED E. N. BRYAN		
FINAL PROTECTIVE FINISH	APPROVED R. A. DRAKEY	SCALE UNIT WT	DWG SIZE A 73V1404 SHEET 1 OF 8

REVISIONS			
SYM	DESCRIPTION	DATE	APPROVAL

LVDC DATA LOAD AND/OR VERIFY (FT05)

1.0 SCOPE

THIS PROCEDURE WILL VERIFY THE GUIDANCE SYSTEM TEST PROGRAM "LVDC DATA LOAD AND/OR VERIFY (FT05)".

2.0 APPLICABLE GOVERNMENT FURNISHED DOCUMENTS

DRAWINGS	
AESS LVDA INTERFACE	50M36401
AESS INSTRUMENT UNIT ESE SATURN V	40M14490
INSTRUMENT UNIT ELECTRICAL SCHEMATICS	40M33221
DOCUMENTS	
IP & C S-IU-503	6009048
TEST PROGRAM SPECIFICATIONS SATURN V LAUNCH COMPUTER COMPLEX AS-503	67-F11-0008
PRELAUNCH CHECKOUT SPECIFICATIONS AND CRITERIA FOR S-IU-503	68-257-0004
OPERATOR REFERENCE MANAUL FOR SLCC PROGRAMMING SYSTEM	68-F11-0003

3.0 GENERAL NOTES

FT05 WILL BE ENTERED FROM KEYBOARD IN ACCORDANCE WITH THE IBM OPERATOR REFERENCE MANUAL. ALL PROGRAM OPTIONS WILL BE EXERCISED AND HARDWARE RESPONSE TO COMPUTER STIMULI WILL BE MONITORED.

4.0 PREREQUISITES

NONE

REVISIONS			
SYM	DESCRIPTION	DATE	APPROVAL

LVDC DATA LOAD AND/OR VERIFY (FT05)

5.0 PROCEDURE

5.1 VERIFY THAT THE INSTRUMENT UNIT IS POWERED DOWN.

5.2 VERIFY THAT LVDA (603A29) AND LVDC (603A28) STAGE INTERCONNECTING CABLES ARE INSTALLED ACCORDING TO IU CID (40M33080).

5.3 VERIFY THAT POWER SWITCH (S1) ON THE GCP (601-608A13) IS IN THE "OFF" POSITION.

5.4 NOTIFY POWER ROOM TO CLOSE THE IU CIRCUIT BREAKERS AND PLACE THE +6D100 AND +6D200 BACKUP BATTERIES ON LINE.

5.5 START THE +6D100 AND +6D200 POWER SUPPLIES.

5.6 PLACE THE +6D100 AND +6D200 OUTPUT POWER SWITCHES TO THE "ON" POSITION.

5.7 PLACE THE +6D100 AND +6D200 BACKUP BATTERY ENABLE SWITCHES TO THE "ON" POSITION AND VERIFY BACKUP BATTERY ENABLED INDICATIONS ON EVENTS DISPLAY PANEL.

5.8 POWER THE INSTRUMENT UNIT UNTIL THE "GROUND POWER" INDICATION IS RECEIVED.

5.9 VERIFY THAT GSCU IS ON.

5.10 ADUST +6D100 AND +6D200 REMOTE VOLTAGE METERS TO READ 28V (+2,-0) VIA THE VOLTAGE INCREASE/DECREASE SWITCHES.

5.11 VERIFY ESE/LVDA SWITCH IN ESE POSITION.

5.12 ISSUE A SWITCH SELECTOR REGISTER TEST FOR THE IU AND VERIFY THE REGISTER TEST INDICATION.

5.13 REQUEST MLF COMPUTER ENGINEERING TO VERIFY THAT COMPUTER PERIPHERAL EQUIPMENT IS READY TO SUPPORT.

5.14 REQUEST TEST CONDUCTOR TO VERIFY THAT LCC & MLF DDAS IS IN "RECEIVE".

5.15 REQUEST THAT S-IVB STAGE APPLY POWER UNTIL "READY FOR POWER TRANSFER" INDICATION IS RECEIVED.

5.16 PLACE "POWER ON" SWITCH (S1) AT GCP 601-608A13 TO AUTO POSITION.

5.17 ENTER FT04, POWER ON OPTION, IN ACCORDANCE WITH THE IBM OPERATOR REFERENCE.

REVISIONS			
SYM	DESCRIPTION	DATE	APPROVAL

5.18 AT SANDERS DISPLAY CONSOLE NO. 2 KEY 7 ENTER LVDC DATA LOAD AND/OR VERIFY (FTO5) IN ACCORDANCE WITH THE IBM OPERATOR REFERENCE MANUAL. EXECUTE AND VERIFY DATA LOAD AND/OR VERIFY TEST PROGRAM.

NOTE: a. THE LVDC MUST RECEIVE ITS LAST INPUT WITHIN 3 MINUTES 20 SECONDS OF BEING COMMANDED TO VERIFY AND PREPARE TO LOAD: OTHERWISE, AN ERROR OCCURS.

b. THE LVDC CORE MAP TABLE SHALL BE USED TO DETERMINE FORBIDDEN SECTORS.

REVISIONS			
SYM	DESCRIPTION	DATE	APPROVAL

6.0 ERROR MESSAGE TEST

6.1 LOAD AND EXECUTE FTO5.

6.2 WHEN INITIAL OPTIONS ARE DISPLAYED ENTER $PA AND VERIFY THE FOLLOWING ERROR MESSAGE:

**FTO5-01
INVALID OPTION SELECTED

6.3 WHEN INITIAL OPTIONS ARE REDISPLAYED SELECT THE MANUAL LOAD SINGLE ADDRESS SELECTION.

6.4 ENTER $PO05001000000000 AND VERIFY THE FOLLOWING ERROR MESSAGE:

**FTO5-11
AN LVDC LOAD HAS BEEN REQUESTED FOR AN ADDRESS FORBIDDEN TO LOAD FROM THE LCC

6.5 WHEN THE LOAD SINGLE ADDRESS SELECTIONS ARE DISPLAYED ENTER $PX TO RETURN TO INITIAL OPTIONS.

6.6 WHEN INITIAL OPTIONS ARE DISPLAYED ENTER $PX TO TERMINATE FTO5.

REVISIONS			
SYM	DESCRIPTION	DATE	APPROVAL

ATTACHMENT "A"

LVDA STATUS CODE CONVERSION CHART

LVDA	MODE	MDI	SOURCE STATEMENT
00	00	NONE	MODE SORT ROUTINE GROUND ENTRY
01	01	733	(PROGRAM CONTINUE ROUTINE)
02	02	734	ACCELEROMETER PULSE COUNT ROUTINE ENTRY
03	21	734, 733	GIMBAL ANGLE MONITOR ROUTINE ENTRY
04	03	735	DISCRETE INPUT ROUTINE ENTRY
05	31	735, 733	DISCRETE OUTPUT ROUTINE ENTRY
06	32	735, 734	G & C STEERING TEST ENTRY
07	321	735, 734, 733	DOM TEST ROUTINE ENTRY
10	40	736	LADDER ERROR TEST ROUTINE ENTRY
11	41	736, 733	PREPARE TO LAUNCH WITHOUT A PLATFORM
12	42	736, 734	PREPARE TO LAUNCH WITH A PLATFORM
13	421	736, 734, 733	EXERCISE ATTITUDE COMMAND ROUTINE MODE 1 ENTRY
14	43	736, 735	COMPUTER INTERFACE UNIT READ ROUTINE ENTRY
15	431	736, 735, 733	SWITCH SELECTOR ROUTINE ENTRY
16	432	736, 735, 734	SECTOR SUM CHECK ROUTINE ENTRY
17	4321	736, 735, 734, 733	EXERCISE ATTITUDE COMMAND ROUTINE MODE 2 ENTRY
20	50	737	SECTOR DUMP ROUTINE ENTRY
21	51	737, 733	VERIFY AND PREPARE TO LOAD ROUTINE ENTRY
22	52	737, 734	MEMORY ERROR TEST
23	521	737, 734, 733	LOAD ROUTINE ENTRY

ATTACHMENT "A"

REVISIONS			
SYM	DESCRIPTION	DATE	APPROVAL

24	53	737, 735	MINOR LOOP, SWITCH SELECTOR AND REAL TIME COUNTER TESTS ENTRY
25	531	737, 735, 733	UNASSIGNED
30	540	737, 736	PREPARE TO LAUNCH SIM. FLT. WITH A PLATFORM
35	5431	737, 736, 735, 733	COMMAND RECEIVER LINKAGE ROUTINE
40	60	738	POWER UP AND INITIALIZE
52	642	738, 736, 734	UNASSIGNED
53	6421	738, 736, 734, 733	(MINOR LOOP, SWITCH SELECTOR, REAL TIME COUNTER TEST ROUTINE)
54	643	738, 736, 735	(LOAD ROUTINE)
55	6431	738, 736, 735, 733	(MEMORY ERROR TEST ROUTINE)
57	64321	738, 736, 735, 734, 733	(SECTOR DUMP ROUTINE)
60	650	738, 737	(EXERCISE ATTITUDE COMMAND ROUTINE MODE 2)
62	652	738, 737, 734	(SWITCH SELECTOR ROUTINE)
63	6521	738, 737, 734, 733	(COMPUTER INTERFACE UNIT READ ROUTINE)
64	653	738, 737, 735	(EXERCISE ATTITUDE COMMAND ROUTINE MODE 1)
65	6531	738, 737, 735, 733	(PREPARE TO LAUNCH ROUTINE)
67	65321	738, 737, 735, 734, 733	(LADDER ERROR TEST ROUTINE)
71	6541	738, 737, 736, 733	(G & C STEERING TEST ROUTINE)
72	6542	738, 737, 736, 734	(DISCRETE OUTPUT ROUTINE)
73	65421	738, 737, 736, 734, 733	(DISCRETE INPUT ROUTINE)
74	6543	738, 737, 736, 735	(GIMBAL ANGLE MONITOR ROUTINE)
75	65431	738, 737, 736, 735, 733	(ACCELEROMETER PULSE COUNT ROUTINE)
76	65432	738, 737, 736, 735, 734	(PROGRAM CONTINUE ROUTINE)
(26)	532-	737, 735, 734	FORCED BEGIN AND INITIALIZE ROUTINE ENTRY
(27)	5321	737, 735, 734, 733	SYNC RESET SUBROUTINE OVERTIME MESSAGE

ATTACHMENT "A"

REVISIONS			
SYM	DESCRIPTION	DATE	APPROVAL

(34)	543	737, 736, 735	EXERCISE ATTITUDE COMMAND ROUTINE ERROR --- INITIAL CONVERTER NOT STILL SELECTED
36	5432	737, 736, 735, 734	PREPARE TO LAUNCH --- COMMAND TO COMPARE GIVEN AZIMUTH TO STORED AZIMUTH VALUE
(37)	54321	737, 736, 735, 734, 733	RESERVED FOR SIM. FLIGHT
(42)	62	738, 734	RESERVED FOR FLIGHT
(43)	621	738, 734, 733	EXERCISE ATTITUDE COMMAND TEST MAXIMUM ATTAINED ON ONE OR MORE AXES
(45)	631	738, 735, 733	READ INPUT DATA SUBROUTINE OVERTIME MESSAGE
(46)	632	738, 735, 734	EXERCISE ATTITUDE COMMAND TEST DRIVING TOWARD NULL
(47)	6321	738, 735, 734, 733	ERROR MONITOR SUBROUTINE ENTRY
(50)	640	738, 736	ABORT TEST STATUS CODE
(51)	641	738, 736, 733	FORCED BEGIN ROUTINE ERROR --- EMR NON-ZERO
(56)	6432	738, 736, 735, 734	VERIFY AND PREPARE TO LOAD ROUTINE TRYING TO LOAD WITHOUT FIRST LOADING PREVIOUS INFORMATION (IF ANY)
(66)	6532	738, 737, 735, 734	ISSUED ON COMPIETION OR REPEATABLE FLT. SIM. RUN
(70)	6540	738, 737, 736	RESERVE FOR SIM. FLIGHT
77	654321	738, 737, 736, 735, 734, 733	FORCES THE EMR SUBROUTINE TO RETURN TO FORCED BEGIN FBDA
31	541	737, 736, 733	UNASSIGNED
32	542	737, 736, 734	LVDC TM TEST
33	5421	737, 736, 734, 733	UNASSIGNED
41	61	738, 733	UNASSIGNED
44	63	738, 735	UNASSIGNED
61	651	738, 737, 733	UNASSIGNED

MSFC FORM 422 (VERTICAL) (AUGUST 1960)

NOTICE — When Government drawings, specifications, or other data are used for any purpose other than in connection with a definitely related Government procurement operation, the United States Government thereby incurs no responsibility nor obligation whatsoever; and the fact that the Government may have formulated, furnished, or in any way supplied the said drawings specifications or other data is not to be regarded by implication or otherwise as in any manner licensing the holder or any other person or corporation, or conveying any rights or permission to manufacture, use, or sell any patented invention that may in any way be related thereto.

APPLICATION		PART No.	MF	REVISIONS			
NEXT ASSY	USED ON			SYM	DESCRIPTION	DATE	APPROVAL

AS-503

PROGRAM VERIFICATION

SECTOR DUMP (FT07)

73V1405

UNLESS OTHERWISE SPECIFIED DIMENSIONS ARE IN INCHES TOLERANCES ON: FRACTIONS DECIMALS ANGLES	ORIGINAL DATE OF DRAWING 7/19/68		SECTOR DUMP (FT07) AS-503	GEORGE C. MARSHALL SPACE FLIGHT CENTER NATIONAL AERONAUTICS AND SPACE ADMINISTRATION HUNTSVILLE, ALABAMA
	DRAFTSMAN	CHECKER		
MATERIAL	TRACER	CHECKER		
	ENGINEER	ENGINEER		
HEAT TREATMENT	SUBMITTED E. N. Bryan E. N. BRYAN		SCALE	DWG SIZE A — 73V1405
FINAL PROTECTIVE FINISH	APPROVED R. A. Drakey R. A. DRAKEY		UNIT WT	SHEET 1 OF 7

REVISIONS			
SYM	DESCRIPTION	DATE	APPROVAL

LVDC SECTOR DUMP TEST PROGRAM (FT07)

1.0 SCOPE

THIS PROCEDURE WILL VERIFY THE GUIDANCE SYSTEM TEST PROGRAM "LVDC SECTOR DUMP TEST (FT07)".

2.0 APPLICABLE GOVERNMENT FURNISHED DOCUMENTS

DRAWINGS	
AESS LVDA INTERFACE	50M36401
AESS INSTRUMENT UNIT ESE SATURN V	40M14490
INSTRUMENT UNIT ELECTRICAL SCHEMATICS	40M33221
DOCUMENTS	
IP & C S-IU-503	6009048
TEST PROGRAM SPECIFICATIONS SATURN V LAUNCH COMPUTER COMPLEX AS-503	67-F11-0008
PRELAUNCH CHECKOUT SPECIFICATIONS AND CRITERIA FOR S-IU-503	68-257-0004
OPERATOR REFERENCE MANAUL FOR SLCC PROGRAMMING SYSTEM	68-F11-0003

3.0 GENERAL NOTES

FT07 WILL BE ENTERED FROM KEYBOARD IN ACCORDANCE WITH THE IBM OPERATOR REFERENCE MANUAL. ALL PROGRAM OPTIONS WILL BE EXERCISED AND HARDWARE RESPONSE TO COMPUTER STIMULI WILL BE MONITORED.

4.0 PREREQUISITES

NONE

REVISIONS			
SYM	DESCRIPTION	DATE	APPROVAL

LVDC SECTOR DUMP TEST PROGRAM (FT07)

5.0 PROCEDURE

5.1 VERIFY THAT THE INSTRUMENT UNIT IS POWERED DOWN.

5.2 VERIFY THAT LVDA (603A29) AND LVDC (603A28) STAGE INTERCONNECTING CABLES ARE INSTALLED ACCORDING TO IU CID (40M33080).

5.3 VERIFY THAT POWER SWITCH (S1) ON THE GCP (601-608A13) IS IN THE "OFF" POSITION.

5.4 NOTIFY POWER ROOM TO CLOSE THE IU CIRCUIT BREAKERS AND PLACE THE +6D100 AND +6D200 BACKUP BATTERIES ON LINE.

5.5 START THE +6D100 AND +6D200 POWER SUPPLIES.

5.6 PLACE THE +6D100 AND +6D200 OUTPUT POWER SWITCHES TO THE "ON" POSITION.

5.7 PLACE THE +6D100 AND +6D200 BACKUP BATTERY ENABLE SWITCHES TO THE "ON" PSOTION AND VERIFY BACKUP BATTERY ENABLED INDICATIONS ON EVENTS DISPLAY PANEL.

5.8 POWER THE INSTRUMENT UNIT UNTIL THE "GROUND POWER" INDICATION IS RECEIVED.

5.9 VERIFY THAT GSCU IS ON.

5.10 ADJUST +6D100 AND +6D200 REMOTE VOLTAGE METERS TO READ 28V (+2,-0) VIA THE VOLTAGE INCREASE/DECREASE SWITCHES.

5.11 VERIFY ESE/LVDA SWITCH IN ESE POSITION.

5.12 ISSUE A SWITCH SELECTOR REGISTER TEST FOR THE IU AND VERIFY THE REGISTER TEST INDICATION.

5.13 REQUEST MLF COMPUTER ENGINEERING TO VERIFY THAT COMPUTER PERIPHERAL EQUIPMENT IS READY TO SUPPORT.

5.14 REQUEST TEST CONDUCTOR TO VERIFY THAT LCC & MLF DDAS IS IN "RECEIVE".

5.15 REQUEST THAT S-IVB STAGE APPLY POWER UNTIL "READY FOR POWER TRANSFER" INDICATION IS RECEIVED.

5.16 PLACE "POWER ON" SWITCH (S1) AT GCP 601-608A13 TO AUTO POSITION.

5.17 ENTER FT04, POWER ON OPTION, IN ACCORDANCE WITH IBM OPERATOR REFERENCE MANUAL.

REVISIONS			
SYM	DESCRIPTION	DATE	APPROVAL

5.18 AT SANDERS DISPLAY CONSOLE NO. 2 KEY 7 ENTER LVDC SECTOR DUMP TEST PROGRAM (FT07) IN ACCORDANCE WITH THE IBM OPERATOR REFERENCE MANUAL. EXEGUTE AND VERIFY LVDC SECTOR DUMP TEST PROGRAM.

DURING EXECUTION OF FT07, AT GCP 601-608A13, MONITOR:

SECTOR DUMP ROUTINE MODE CODE 05
MDI 737, ON

5.19 REQUEST LCCC OPERATOR TO VERIFY THAT AN LVDC SECTOR DUMP WAS PRINTED ON THE LINE PRINTER FOR THE APPROPRIATE SECTOR CHOSEN.

ATTACHMENT "A"

REVISIONS			
SYM	DESCRIPTION	DATE	APPROVAL

LVDA STATUS CODE CONVERSION CHART

LVDA	MODE	MDI	SOURCE STATEMENT
00	00	NONE	MODE SORT ROUTINE GROUND ENTRY
01	01	733	(PROGRAM CONTINUE ROUTINE)
02	02	734	ACCELEROMETER PULSE COUNT ROUTINE ENTRY
03	21	734, 733	GIMBAL ANGLE MONITOR ROUTINE ENTRY
04	03	735	DISCRETE INPUT ROUTINE ENTRY
05	31	735, 733	DISCRETE OUTPUT ROUTINE ENTRY
06	32	735, 734	G & C STEERING TEST ENTRY
07	321	735, 734, 733	DOM TEST ROUTINE ENTRY
10	40	736	LADDER ERROR TEST ROUTINE ENTRY
11	41	736, 733	PREPARE TO LAUNCH WITHOUT A PLATFORM
12	42	736, 734	PREPARE TO LAUNCH WITH A PLATFORM
13	421	736, 734, 733	EXERCISE ATTITUDE COMMAND ROUTINE MODE 1 ENTRY
14	43	736, 735	COMPUTER INTERFACE UNIT READ ROUTINE ENTRY
15	431	736, 735, 733	SWITCH SELECTOR ROUTINE ENTRY
16	432	736, 735, 734	SECTOR SUM CHECK ROUTINE ENTRY
17	4321	736, 735, 734, 733	EXERCISE ATTITUDE COMMAND ROUTINE MODE 2 ENTRY
20	50	737	SECTOR DUMP ROUTINE ENTRY
21	51	737, 733	VERIFY AND PREPARE TO LOAD ROUTINE ENTRY
22	52	737, 734	MEMORY ERROR TEST
23	521	737, 734, 733	LOAD ROUTINE ENTRY

REVISIONS			
SYM	DESCRIPTION	DATE	APPROVAL

ATTACHMENT "A"

24	53	737, 735	MINOR LOOP, SWITCH SELECTOR AND REAL TIME COUNTER TESTS ENTRY
25	531	737, 735, 733	UNASSIGNED
30	540	737, 736	PREPARE TO LAUNCH SIM. FLT. WITH A PLATFORM
35	5431	737, 736, 735, 733	COMMAND RECEIVER LINKAGE ROUTINE
40	60	738	POWER UP AND INITIALIZE
52	642	738, 736, 734	UNASSIGNED
53	6421	738, 736, 734, 733	(MINOR LOOP, SWITCH SELECTOR, REAL TIME COUNTER TEST ROUTINE)
54	643	738, 736, 735	(LOAD ROUTINE)
55	6431	738, 736, 735, 733	(MEMORY ERROR TEST ROUTINE)
57	64321	738, 736, 735, 734, 733	(SECTOR DUMP ROUTINE)
60	650	738, 737	(EXERCISE ATTITUDE COMMAND ROUTINE MODE 2)
62	652	738, 737, 734	(SWITCH SELECTOR ROUTINE)
63	6521	738, 737, 734, 733	(COMPUTER INTERFACE UNIT READ ROUTINE)
64	653	738, 737, 735	(EXERCISE ATTITUDE COMMAND ROUTINE MODE 1)
65	6531	738, 737, 735, 733	(PREPARE TO LAUNCH ROUTINE)
67	65321	738, 737, 735, 734, 733	(LADDER ERROR TEST ROUTINE)
71	6541	738, 737, 736, 733	(G & C STEERING TEST ROUTINE)
72	6542	738, 737, 736, 734	(DISCRETE OUTPUT ROUTINE)
73	65421	738, 737, 736, 734, 733	(DISCRETE INPUT ROUTINE)
74	6543	738, 737, 736, 735	(GIMBAL ANGLE MONITOR ROUTINE)
75	65431	738, 737, 736, 735, 733	(ACCELEROMETER PULSE COUNT ROUTINE)
76	65432	738, 737, 736, 735, 734	(PROGRAM CONTINUE ROUTINE)
(26)	532	737, 735, 734	FORCED BEGIN AND INITIALIZE ROUTINE ENTRY
(27)	5321	737, 735, 734, 733	SYNC RESET SUBROUTINE OVERTIME MESSAGE

ATTACHMENT "A"

REVISIONS			
SYM	DESCRIPTION	DATE	APPROVAL

(34)	543	737, 736, 735	EXERCISE ATTITUDE COMMAND ROUTINE ERROR --- INITIAL CONVERTER NOT STILL SELECTED
36	5432	737, 736, 735, 734	PREPARE TO LAUNCH---COMMAND TO COMPARE GIVEN AZIMUTH TO STORED AZIMUTH VALUE
(37)	54321	737, 736, 735, 734, 733	RESERVED FOR SIM. FLIGHT
(42)	62	738, 734	RESERVED FOR FLIGHT
(43)	621	738, 734, 733	EXERCISE ATTITUDE COMMAND TEST-MAXIMUM ATTAINED ON ONE OR MORE AXES
(45)	631	738, 735, 733	READ INPUT DATA SUBROUTINE OVERTIME MESSAGE
(46)	632	738, 735, 734	EXERCISE ATTITUDE COMMAND TEST DRIVING TOWARD NULL
(47)	6321	738, 735, 734, 733	ERROR MONITOR SUBROUTINE ENTRY
(50)	640	738, 736	ABORT TEST STATUS CODE
(51)	641	738, 736, 733	FORCED BEGIN ROUTINE ERROR--- EMR NON-ZERO
(56)	6432	738, 736, 735, 734	VERIFY AND PREPARE TO LOAD ROUTINE TRYING TO LOAD WITHOUT FIRST LOADING PREVIOUS INFORMATION (IF ANY)
(66)	6532	738, 737, 735, 734	ISSUED ON COMPIETION OF REPEATABLE FLT. SIM. RUN
(70)	6540	738, 737, 736	RESERVE FOR SIM. FLIGHT
77	654321	738, 737, 736, 735, 734, 733	FORCES THE EMR SUBROUTINE TO RETURN TO FORCED BEGIN FBDA
31	541	737, 736, 733	UNASSIGNED
32	542	737, 736, 734	LVDC TM TEST
33	5421	737, 736, 734, 733	UNASSIGNED
41	61	738, 733	UNASSIGNED
44	63	738, 735	UNASSIGNED
61	651	738, 737, 733	UNASSIGNED

MSFC FORM 422 (VERTICAL) (AUGUST 1960)

NOTICE — When Government drawings, specifications, or other data are used for any purpose other than in connection with a definitely related Government procurement operation, the United States Government thereby incurs no responsibility nor obligation whatsoever; and the fact that the Government may have formulated, furnished, or in any way supplied the said drawings specifications or other data is not to be regarded by implication or otherwise as in any manner licensing the holder or any other person or corporation, or conveying any rights or permission to manufacture, use, or sell any patented invention that may in any way be related thereto.

APPLICATION		PART No.	MF	REVISIONS			
NEXT ASSY	USED ON			SYM	DESCRIPTION	DATE	APPROVAL

AS-503

PROGRAM VERIFICATION

LVDC CORE MAP LOADER (FT08)

73V1406

UNLESS OTHERWISE SPECIFIED DIMENSIONS ARE IN INCHES TOLERANCES ON: FRACTIONS DECIMALS ANGLES	ORIGINAL DATE OF DRAWING 7/19/68 DRAFTSMAN / CHECKER TRACER / CHECKER ENGINEER / ENGINEER	LVDC CORE MAP LOADER (FT08) AS-503	GEORGE C. MARSHALL SPACE FLIGHT CENTER NATIONAL AERONAUTICS AND SPACE ADMINISTRATION HUNTSVILLE, ALABAMA
MATERIAL	SUBMITTED E. N. Bryan E. N. Bryan		
HEAT TREATMENT			
FINAL PROTECTIVE FINISH	APPROVED R. A. Drakey R. A. Drakey	SCALE UNIT WT	DWG SIZE A 73V1406 SHEET 1 OF 7

REVISIONS			
SYM	DESCRIPTION	DATE	APPROVAL

LVDC CORE MAP LOADER TEST PROGRAM (FT08)

1.0 SCOPE

THIS PROCEDURE WILL VERIFY THE GUIDANCE SYSTEM TEST PROGRAM "LVDC CORE MAP LOADER TEST (FT08)".

2.0 APPLICABLE GOVERNMENT FURNISHED DOCUMENTS

DRAWINGS	
AESS LVDA INTERFACE	50M36401
AESS INSTRUMENT UNIT ESE SATURN V	40M14490
INSTRUMENT UNIT ELECTRICAL SCHEMATICS	40M33221
DOCUMENTS	
IP & C S-IU-503	6009048
TEST PROGRAM SPECIFICATIONS SATURN V LAUNCH COMPUTER COMPLEX AS-503	67-F11-0008
PRELAUNCH CHECKOUT SPECIFICATIONS AND CRITERIA FOR S-IU-503	68-257-0004
OPERATOR REFERENCE MANUAL FOR SLCC PROGRAMMING SYSTEM	68-F11-0003

3.0 GENERAL NOTES

FT08 WILL BE ENTERED FROM KEYBOARD IN ACCORDANCE WITH THE IBM OPERATOR REFERENCE MANUAL. ALL PROGRAM OPTIONS WILL BE EXERCISED AND HARDWARE RESPONSE TO COMPUTER STIMULI WILL BE MONITORED.

4.0 PREREQUISITES

NONE

REVISIONS			
SYM	DESCRIPTION	DATE	APPROVAL

LVDC CORE MAPE LOADER TEST PROGRAM (FT08)

5.0 PROCEDURE

5.1 VERIFY THAT THE INSTRUMENT UNIT IS POWERED DOWN.

5.2 VERIFY THAT LVDA (603A29) AND LVDC (603A28) STAGE INTERCONNECTING CABLES ARE INSTALLED ACCORDING TO IU CID (40M33080).

5.3 VERIFY THAT POWER SWITCH (S1) ON THE GCP (601-608A13) IS IN THE "OFF" POSITION.

5.4 NOTIFY POWER ROOM TO CLOSE THE IU CIRCUIT BREAKERS AND PLACE THE +6D100 AND +6D200 BACKUP BATTERIES ON LINE.

5.5 START THE +6D100 AND +6D200 POWER SUPPLIES.

5.6 PLACE THE +6D100 AND +6D200 OUTPUT POWER SWITCHES TO THE "ON" POSITION.

5.7 PLACE THE +6D100 AND +6D200 BACKUP BATTERY ENABLE SWITCHES TO THE "ON" POSITION AND VERIFY BACKUP BATTERY ENABLED INDICATIONS ON EVENTS DISPLAY PANEL.

5.8 POWER THE INSTRUMENT UNIT UNTIL THE "GROUND POWER" INDICATION IS RECEIVED.

5.9 VERIFY THAT GSCU IS ON.

5.10 ADJUST +6D100 AND +6D200 REMOTE VOLTAGE METERS TO READ 28V(+2, -0) VIA THE VOLTAGE INCREASE/DECREASE SWITCHES.

5.11 VERIFY ESE/LVDA SWITCH IN ESE POSITION.

5.12 ISSUE A SWITCH SELECTOR REGISTER TEST FOR THE IU AND VERIFY THE REGISTER TEST INDICATION.

5.13 REQUEST MLF COMPUTER ENGINEERING TO VERIFY THAT COMPUTER PERIPHERAL EQUIPMENT IS READY TO SUPPORT.

5.14 REQUEST TEST CONDUCTOR TO VERIFY THAT LCC & MLF DDAS IS IN "RECEIVE".

5.15 REQUEST THAT S-IVB STAGE APPLY POWER UNTIL "READY FOR POWER TRANSFER" INDICATION IS RECEIVED.

5.16 PLACE "POWER ON" SWITCH (S1) AT GCP 601-608A13 TO AUTO POSITION.

5.17 ENTER FT04, POWER ON OPTION, IN ACCORDANCE WITH IBM OPERATOR REFERENCE MANUAL. EXIT TEST UPON SUCCESSFUL POWER UP.

5.18 ENTER $ULCA00536, 00000000 AND EXECUTE TO CLEAR OLD CORE MAP INDICATOR WORD IN LCC MEMORY.

REVISIONS			
SYM	DESCRIPTION	DATE	APPROVAL

5.19 AT SANDERS DISPLAY CONSOLE NO. 2 KEY 7 ENTER LVDC CORE MAP LOADER TEST PROGRAM (FT08) IN ACCORDANCE WITH THE IBM OPERATOR REFERENCE MANUAL. EXECUTE AND VERIFY LVDC CORE MAP LOADER TEST PROGRAM.

5.20 ENTER $ULCD00536 AND VERIFY THAT THE NEW CORE MAP WAS LOADED IN THE LCC MEMORY BANK.

REVISIONS			
SYM	DESCRIPTION	DATE	APPROVAL

ATTACHMENT "A"

LVDA STATUS CODE CONVERSION CHART

LVDA	MODE	MDI	SOURCE STATEMENT
00	00	NONE	MODE SORT ROUTINE GROUND ENTRY
01	01	733	(PROGRAM CONTINUE ROUTINE)
02	02	734	ACCELEROMETER PULSE COUNT ROUTINE ENTRY
03	21	734, 733	GIMBAL ANGLE MONITOR ROUTINE ENTRY
04	03	735	DISCRETE INPUT ROUTINE ENTRY
05	31	735, 733	DISCRETE OUTPUT ROUTINE ENTRY
06	32	735, 734	G & C STEERING TEST ENTRY
07	321	735, 734, 733	DOM TEST ROUTINE ENTRY
10	40	736	LADDER ERROR TEST ROUTINE ENTRY
11	41	736, 733	PREPARE TO LAUNCH WITHOUT A PLATFORM
12	42	736, 734	PREPARE TO LAUNCH WITH A PLATFORM
13	421	736, 734, 733	EXERCISE ATTITUDE COMMAND ROUTINE MODE 1 ENTRY
14	43	736, 735	COMPUTER INTERFACE UNIT READ ROUTINE ENTRY
15	431	736, 735, 733	SWITCH SELECTOR ROUTINE ENTRY
16	432	736, 735, 734	SECTOR SUM CHECK ROUTINE ENTRY
17	4321	736, 735, 734, 733	EXERCISE ATTITUDE COMMAND ROUTINE MODE 2 ENTRY
20	50	737	SECTOR DUMP ROUTINE ENTRY
21	51	737, 733	VERIFY AND PREPARE TO LOAD ROUTINE ENTRY
22	52	737, 734	MEMORY ERROR TEST
23	521	737, 734, 733	LOAD ROUTINE ENTRY

ATTACHMENT "A"

REVISIONS			
SYM	DESCRIPTION	DATE	APPROVAL

24	53	737, 735	MINOR LOOP, SWITCH SELECTOR AND REAL TIME COUNTER TESTS ENTRY
25	531	737, 735, 733	UNASSIGNED
30	540	737, 736	PREPARE TO LAUNCH SIM. FLT. WITH A PLATFORM
35	5431	737, 736, 735, 733	COMMAND RECEIVER LINKAGE ROUTINE
40	60	738	POWER UP AND INITIALIZE
52	642	738, 736, 734	UNASSIGNED
53	6421	738, 736, 734, 733	(MINOR LOOP, SWITCH SELECTOR, REAL TIME COUNTER TEST ROUTINE)
54	643	738, 736, 735	(LOAD ROUTINE)
55	6431	738, 736, 735, 733	(MEMORY ERROR TEST ROUTINE)
57	64321	738, 736, 735, 734, 733	(SECTOR DUMP ROUTINE)
60	650	738, 737	(EXERCISE ATTITUDE COMMAND ROUTINE MODE 2)
62	652	738, 737, 734	(SWITCH SELECTOR ROUTINE)
63	6521	738, 737, 734, 733	(COMPUTER INTERFACE UNIT READ ROUTINE)
64	653	738, 737, 735	(EXERCISE ATTITUDE COMMAND ROUTINE MODE 1)
65	6531	738, 737, 735, 733	(PREPARE TO LAUNCH ROUTINE)
67	65321	738, 737, 735, 734, 733	(LADDER ERROR TEST ROUTINE)
71	6541	738, 737, 736, 733	(G & C STEERING TEST ROUTINE)
72	6542	738, 737, 736, 734	(DISCRETE OUTPUT ROUTINE)
73	65421	738. 737, 736, 734, 733	(DISCRETE INPUT ROUTINE)
74	6543	738, 737, 736, 735	(GIMBAL ANGLE MONITOR ROUTINE)
75	65431	738, 737, 736, 735, 733	(ACCELEROMETER PULSE COUNT ROUTINE)
76	65432	738, 737, 736, 735, 734	(PROGRAM CONTINUE ROUTINE)
(26)	532	737, 735, 734	FORCED BEGIN AND INITIALIZE ROUTINE ENTRY
(27)	5321	737, 735, 734, 733	SYNC RESET SUBROUTINE OVERTIME MESSAGE

ATTACHMENT "A"

REVISIONS			
SYM	DESCRIPTION	DATE	APPROVAL

(34)	543	737, 736, 735	EXERCISE ATTITUDE COMMAND ROUTINE ERROR --- INITIAL CONVERTER NOT STILL SELECTED
36	5432	737, 736, 735, 734	PREPARE TO LAUNCH---COMMAND TO COMPARE GIVEN AZIMUTH TO STORED AZIMUTH VALUE
(37)	54321	737, 736, 735, 734, 733	RESERVED FOR SIM. FLIGHT
(42)	62	738, 734	RESERVED FOR FLIGHT
(43)	621	738, 734, 733	EXERCISE ATTITUDE COMMAND TEST-MAXIMUM ATTAINED ON ONE OR MORE AXES
(45)	631	738, 735, 733	READ INPUT DATA SUBROUTINE OVERTIME MESSAGE
(46)	632	738, 735, 734	EXERCISE ATTITUDE COMMAND TEST DRIVING TOWARD NULL
(47)	6321	738, 735, 734, 733	ERROR MONITOR SUBROUTINE ENTRY
(50)	640	738, 736	ABORT TEST STATUS CODE
(51)	641	738, 736, 733	FORCED BEGIN ROUTINE ERROR --EMR NON-ZERO
(56)	6432	738, 736, 735, 734	VERIFY AND PREPARE TO LOAD ROUTINE TRYING TO LOAD WITHOUT FIRST LOADING PREVIOUS INFORMATION (IF ANY)
(66)	6532	738, 737, 735, 734	ISSUED ON COMPLETION OF REPEATABLE FLT. SIM. RUN
(70)	6540	738, 737, 736	RESERVE FOR SIM. FLIGHT
77	654321	738, 737, 736, 735, 734, 733	FORCES THE EMR SUBROUTINE TO RETURN TO FORCED BEGIN FBDA
31	541	737, 736, 733	UNASSIGNED
32	542	737, 736, 734	LVDC TM TEST
33	5421	737, 736, 734, 733	UNASSIGNED
41	61	738, 733	UNASSIGNED
44	63	738, 735	UNASSIGNED
61	651	738, 737, 733	UNASSIGNED

MSFC FORM 422 (VERTICAL) (AUGUST 1960)

NOTICE — When Government drawings, specifications, or other data are used for any purpose other than in connection with a definitely related Government procurement operation, the United States Government thereby incurs no responsibility nor obligation whatsoever; and the fact that the Government may have formulated, furnished, or in any way supplied the said drawings specifications or other data is not to be regarded by implication or otherwise as in any manner licensing the holder or any other person or corporation, or conveying any rights or permission to manufacture, use, or sell any patented invention that may in any way be related thereto.

APPLICATION		PART No.	M F	REVISIONS			
NEXT ASSY	USED ON			SYM	DESCRIPTION	DATE	APPROVAL

AS-503

PROGRAM VERIFICATION

LVDC DDAS TEST PORGRAM (FT35)

73V1407

UNLESS OTHERWISE SPECIFIED DIMENSIONS ARE IN INCHES TOLERANCES ON: FRACTIONS DECIMALS ANGLES	ORIGINAL DATE OF DRAWING 7/19/68 DRAFTSMAN / CHECKER TRACER / CHECKER ENGINEER / ENGINEER	LVDC DDAS TEST PROGRAM (FT35) AS-503	GEORGE C. MARSHALL SPACE FLIGHT CENTER NATIONAL AERONAUTICS AND SPACE ADMINISTRATION HUNTSVILLE, ALABAMA
MATERIAL	SUBMITTED E. N. Bryan E. N. BRYAN		
HEAT TREATMENT			
FINAL PROTECTIVE FINISH	APPROVED R. A. Drakey R. A. DRAKEY	SCALE / UNIT WT	DWG SIZE A
			73V1407 SHEET 1 OF 4

REVISIONS			
SYM	DESCRIPTION	DATE	APPROVAL

LVDC DDAS TEST PROGRAM (FT35)

1.0 SCOPE

THIS PROCEDURE WILL VERIFY THE GUIDANCE SYSTEM TEST PROGRAM "LVDC DDAS TEST (FT35)".

2.0 APPLICABLE GOVERNMENT FURNISHED DOCUMENTS

DRAWINGS AESS LVDA INTERFACE	50M36401
AESS INSTRUMENT UNIT ESE SATURN V	40M14490
INSTRUMENT UNIT ELECTRICAL SCHEMATICS	40M33221
DOCUMENTS IP & C S-IU-503	6009048
TEST PROGRAM SPECIFICATIONS SATURN V LAUNCH COMPUTER COMPLEX AS-503	67-F11-0008
PRELAUNCH CHECKOUT SPECIFICATIONS AND CRITERIA FOR S-IU-503	68-257-0004
OPERATOR REFERENCE MANUAL FOR SLCC PROGRAMMING SYSTEM	68-F11-0003

3.0 GENERAL NOTES

FT35 WILL BE ENTERED FROM KEYBOARD IN ACCORDANCE WITH THE IBM OPERATOR REFERENCE MANUAL. ALL PROGRAM OPTIONS WILL BE EXERCISED AND HARDWARE RESPONSE TO COMPUTER STIMULI WILL BE MONITORED.

4.0 PREREQUISITES

NONE

REVISIONS			
SYM	DESCRIPTION	DATE	APPROVAL

LVDC DDAS TEST PROGRAM (FT35)

5.0 PROCEDURE

5.1 VERIFY THAT THE INSTRUMENT UNIT IS POWERED DOWN.

5.2 VERIFY THAT LVDA (603A29) AND LVDC (603A28) STAGE INTERCONNECTING CABLES ARE INSTALLED ACCORDING TO IU CID (40M33080).

5.3 VERIFY THAT POWER SWITCH (S1) ON THE GCP (601-608A13) IS IN THE "OFF" POSITION.

5.4 NOTIFY POWER ROOM TO CLOSE THE IU CIRCUIT BREAKERS AND PLACE THE +6D100 AND +6D200 BACKUP BATTERIES ON LINE.

5.5 START THE +6D100 AND +6D200 POWER SUPPLIES.

5.6 PLACE THE +6D100 AND +6D200 OUTPUT POWER SWITCHES TO THE "ON" POSITION.

5.7 PLACE THE +6D100 AND +6D200 BACKUP BATTERY ENABLE SWITCHES TO THE "ON" POSITION AND VERIFY BACKUP BATTERY ENABLED INDICATIONS ON EVENTS DISPLAY PANEL.

5.8 POWER THE INSTRUMENT UNIT UNTIL THE "GROUND POWER" INDICATION IS RECEIVED.

5.9 VERIFY THAT GSCU IS ON.

5.10 ADJUST +6D100 AND +6D200 REMOTE VOLTAGE METERS TO READ 28V (+2,-0) VIA THE VOLTAGE INCREASE/DECREASE SWITCHES.

5.11 VERIFY ESE/LVDA SWITCH IN ESE POSITION.

5.12 ISSUE A SWITCH SELECTOR REGISTER TEST FOR THE IU AND VERIFY THE REGISTER TEST INDICATION.

5.13 REQUEST MLF COMPUTER ENGINEERING TO VERIFY THAT COMPUTER PERIPHERAL EQUIPMENT IS READY TO SUPPORT.

5.14 REQUEST TEST CONDUCTOR TO VERIFY THAT LCC & MLF DDAS IS IN "RECEIVE".

5.15 REQUEST THAT S-IVB STAGE APPLY POWER UNTIL "READY FOR POWER TRANSFER" INDICATION IS RECEIVED.

REVISIONS			
SYM	DESCRIPTION	DATE	APPROVAL

5.16 PLACE "POWER ON" SWITCH (S1) AT GCP 601-608A13 TO AUTO POSITION.

5.17 REQUEST DDAS ENGINEERING TO POWER UP PCM/DDAS, PAM, F1 AND F2 TELEMETRY SYSTEMS IN THE INSTRUMENT UNIT.

5.18 AT SANDERS DISPLAY CONSOLE NO. 2 KEY 7 ENTER POWER ON, OFF, AND/OR REDUNDANCY (FT04) IN ACCORDANCE WITH THE IBM OPERATOR REFERENCE MANUAL. SELECT THE POWER ON OPTION.

5.19 AT SANDERS DISPLAY CONSOLE NO. 2 KEY 7 ENTER LVDC DDAS TEST PROGRAM (FT35) IN ACCORDANCE WITH THE IBM OPERATOR REFERENCE MANUAL. EXECUTE AND VERIFY LVDC DDAS TEST PROGRAM (FT35).

MSFC FORM 422 (VERTICAL) (AUGUST 1960)

NOTICE — When Government drawings, specifications, or other data are used for any purpose other than in connection with a definitely related Government procurement operation, the United States Government thereby incurs no responsibility nor obligation whatsoever; and the fact that the Government may have formulated, furnished, or in any way supplied the said drawings specifications or other data is not to be regarded by implication or otherwise as in any manner licensing the holder or any other person or corporation, or conveying any rights or permission to manufacture, use, or sell any patented invention that may in any way be related thereto.

APPLICATION		PART No.	M F	REVISIONS			
NEXT ASSY	USED ON			SYM	DESCRIPTION	DATE	APPROVAL

AS-503

PROGRAM VERIFICATION

LVDC/LVDA SELF TEST (FT20)

73V1408

UNLESS OTHERWISE SPECIFIED DIMENSIONS ARE IN INCHES TOLERANCES ON: FRACTIONS DECIMALS ANGLES	ORIGINAL DATE OF DRAWING 7/19/68 DRAFTSMAN / CHECKER TRACER / CHECKER ENGINEER / ENGINEER	LVDC/LVDA SELF TEST (FT20) AS-503	GEORGE C. MARSHALL SPACE FLIGHT CENTER NATIONAL AERONAUTICS AND SPACE ADMINISTRATION HUNTSVILLE, ALABAMA
MATERIAL	SUBMITTED E. N. Bryan E. N. BRYAN		
HEAT TREATMENT			
FINAL PROTECTIVE FINISH	APPROVED R. A. Drakey R. A. DRAKEY	SCALE / UNIT WT	DWG SIZE A — 73V1408 — SHEET 1 OF 7

REVISIONS			
SYM	DESCRIPTION	DATE	APPROVAL

LVDA/LVDC SELF TEST PROGRAM (FT20)

1.0 SCOPE

THIS PROCEDURE WILL VERIFY THE GUIDANCE SYSTEM TEST PROGRAM "LVDA/LVDC SELF TEST (FT20)".

2.0 APPLICABLE GOVERNMENT FURNISHED DOCUMENTS

DRAWINGS	
AESS LVDA INTERFACE	50M36401
AESS INSTRUMENT UNIT ESE SATURN V	40M14490
INSTRUMENT UNIT ELECTRICAL SCHEMATICS	40M33221
DOCUMENTS	
IP & C S-IU-503	6009048
TEST PROGRAM SPECIFICATIONS SATURN V LAUNCH COMPUTER COMPLEX AS-503	67-F11-0008
PRELAUNCH CHECKOUT SPECIFICATIONS AND CRITERIA FOR S-IU-503	
OPERATOR REFERENCE MANUAL FOR SLCC PROGRAMMING SYSTEM	68-F11-0003

3.0 GENERAL NOTES

FT20 WILL BE ENTERED FROM KEYBOARD IN ACCORDANCE WITH THE IBM OPERATOR REFERENCE MANUAL. ALL PROGRAM OPTIONS WILL BE EXTERCISED AND HARDWARE RESPONSE TO COMPUTER STIMULI WILL BE MONITORED.

4.0 PREREQUISITES

NONE

REVISIONS			
SYM	DESCRIPTION	DATE	APPROVAL

LVDA/LVDC SELF TEST PROGRAM (FT20)

5.0 PROCEDURE

5.1 VERIFY THAT THE INSTRUMENT UNIT IS POWERED DOWN.

5.2 VERIFY THAT LVDA (603A29) AND LVDC (603A28) STAGE INTERCONNECTING CABLES ARE INSTALLED ACCORDING TO IU CID (40M33080).

5.3 VERIFY THAT POWER SWITCH (S1) ON THE GCP (601-608A13) IS IN THE "OFF" POSITION.

5.4 NOTIFY POWER ROOM TO CLOSE THE IU CIRCUIT BREAKERS AND PLACE THE +6D100 AND +6D200 BACKUP BATTERIES ON LINE.

5.5 START THE +6D100 AND +6D200 POWER SUPPLIES.

5.6 PLACE THE +6D100 AND +6D200 OUTPUT POWER SWITCHES TO THE "ON" POSITION.

5.7 PLACE THE +6D100 AND +6D200 BACKUP BATTERY ENABLE SWITCHES TO THE "ON" POSITION AND VERIFY BACKUP BATTERY ENABLED INDICATIONS ON EVENTS DISPLAY PANEL.

5.8 POWER THE INSTRUMENT UNIT UNTIL THE "GROUND POWER" INDICATION IS RECEIVED.

5.9 VERIFY THAT GSCU IS ON.

5.10 ADJUST +6D100 AND +6D200 REMOTE VOLTAGE METER TO READ 28V (+2,-0) VIA THE VOLTAGE INCREASE/DECREASE SWITCHES.

5.11 VERIFY ESE/LVDA SWITCH IN ESE POSITION.

5.12 ISSUE A SWITCH SELECTOR REGISTER TEST FOR THE IU AND VERIFY THE REGISTER TEST INDICATION.

5.13 REQUEST MLF COMPUTER ENGINEERING TO VERIFY THAT COMPUTER PERIPHERAL EQUIPMENT IS READY TO SUPPORT.

5.14 REQUEST TEST CONDUCTOR TO VERIFY THAT LCC & MLF DDAS IS IN "RECEIVE".

5.15 REQUEST THAT S-IVB STAGE APPLY POWER UNTIL "READY FOR POWER TRANSFER" INDICATION IS RECEIVED.

5.16 REQUEST TEST CONDUCTOR TO VERIFY THAT ALL HYDRAULICS ARE OFF. THIS IS NECESSARY TO AVOID POSSIBLE SPURIOUS OUTPUTS TO THE ACTUATORS DURING THE LADDER ERROR ROUTINE OF (FT20).

5.17 PLACE POWER ON SWITCH (S1) AT GCP 601-608A13 TO AUTO POSITION.

REVISIONS			
SYM	DESCRIPTION	DATE	APPROVAL

5.18 ENTER FT04, POWER ON OPTION, IN ACCORDANCE WITH THE IBM OPERATOR REFERENCE MANUAL.

5.19 AT SANDERS DISPLAY CONSOLE NO. 2 KEY 7 ENTER LVDC/LVDA SELF TEST PROGRAM (FT20) IN ACCORDANCE WITH THE IBM OPERATOR REFERENCE MANUAL. EXECUTE AND VERIFY THE FOLLOWING LVDC/LVDA PRELAUNCH ROUTINES.

a. MODE SORT
b. MEMORY ERROR - LVDC PROGRAM ERRORS
c. LADDER ERROR
d. MINOR LOOP
e. SWITCH SELECTOR COUNTER
f. DATA OUTPUT MULTIPLEXER

NOTE: MODE CODES FOR THE ABOVE ROUTINES ARE:

a.	FORCED BEGIN	MODE	CODE	532
		MDI 737, 735, 734, -		ON
b.	MODE SORT	MODE	CODE	00
c.	MEMORY ERROR	MODE	CODE	52
		MDI 737, 734 -		ON
d.	LADDER ERROR	MODE	CODE	04
		MDI 736, -		ON
e.	MINOR LOOP	MODE	CODE	53
		MDI 737, 735, -		ON
f.	SWITCH SELECTOR COUNTER	MODE	CODE	53
		MDI 737, 735, -		ON
g.	DATA OUTPUT MULTIPLEXER	MODE	CODE	321
		MDI 735, 734, 733 -		ON

REVISIONS			
SYM	DESCRIPTION	DATE	APPROVAL

ATTACHMENT "A"

LVDA STATUS CODE CONVERSION CHART

LVDA	MODE	MDI	SOURCE STATEMENT
00	00	NONE	MODE SORT ROUTINE GROUND ENTRY
01	01	733	(PROGRAM CONTINUE ROUTINE)
02	02	734	ACCELEROMETER PULSE COUNT ROUTINE ENTRY
03	21	734, 733	GIMBAL ANGLE MONITOR ROUTINE ENTRY
04	03	735	DISCRETE INPUT ROUTINE ENTRY
05	31	735, 733	DISCRETE OUTPUT ROUTINE ENTRY
06	32	735, 734	G & C STEERING TEST ENTRY
07	321	735, 734, 733	DOM TEST ROUTINE ENTRY
10	40	736	LADDER ERROR TEST ROUTINE ENTRY
11	41	736, 733	PREPARE TO LAUNCH WITHOUT A PLATFORM
12	42	736, 734	PREPARE TO LAUNCH WITH A PLATFORM
13	421	736, 734, 733	EXERCISE ATTITUDE COMMAND ROUTINE MODE 1 ENTRY
14	43	736, 735	COMPUTER INTERFACE UNIT READ ROUTINE ENTRY
15	431	736, 735, 733	SWITCH SELECTOR ROUTINE ENTRY
16	432	736, 735, 734	SECTOR SUM CHECK ROUTINE ENTRY
17	4321	736, 735, 734, 733	EXERCISE ATTITUDE COMMAND ROUTINE MODE 2 ENTRY
20	50	737	SECTOR DUMP ROUTINE ENTRY
21	51	737, 733	VERIFY AND PREPARE TO LOAD ROUTINE ENTRY
22	52	737, 734	MEMORY ERROR TEST
23	521	737, 734, 733	LOAD ROUTINE ENTRY

REVISIONS			
SYM	DESCRIPTION	DATE	APPROVAL

ATTACHMENT "A"

24	53	737, 735	MINOR LOOP, SWITCH SELECTOR AND REAL TIME COUNTER TESTS ENTRY
25	531	737, 735, 733	UNASSIGNED
30	540	737, 736	PREPARE TO LAUNCH SIM. FLT. WITH A PLATFORM
35	5431	737, 736, 735, 733	COMMAND RECEIVER LINKAGE ROUTINE
40	60	738	POWER UP AND INITIALIZE
52	642	738, 736, 734	UNASSIGNED
53	6421	738, 736, 734, 733	(MINOR LOOP, SWITCH SELECTOR, REAL TIME COUNTRER TEST ROUTINE)
54	643	738, 736, 735	(LOAD ROUTINE)
55	6431	738, 736, 735, 733	(MEMORY ERROR TEST ROUTINE)
57	64321	738, 736, 735, 734, 733	(SECTOR DUMP ROUTINE)
60	650	738, 737	(EXERCISE ATTITUDE COMMAND ROUTINE MODE 2)
62	652	738, 737, 734	(SWITCH SELECTOR ROUTINE)
63	6521	738, 737, 734, 733	(COMPUTER INTERFACE UNIT READ ROUTINE)
64	653	738, 737, 735	(EXERCISE ATTITUDE COMMAND ROUTINE MODE 1)
65	6531	738, 737, 735, 733	(PREPARE TO LAUNCH ROUTINE)
67	65321	738, 737, 735, 734, 733	(LADDER ERROR TEST ROUTINE)
71	6541	738, 737, 736, 733	(G & C STEERING TEST ROUTINE)
72	6542	738, 737, 736, 734	(DISCRETE OUTPUT ROUTINE)
73	65421	738, 737, 736, 734, 733	(DISCRETE INPUT ROUTINE)
74	6543	738, 737, 736, 735	(GIMBAL ANGLE MONITOR ROUTINE)
75	65431	738, 737, 736, 735, 733	(ACCELEROMETER PULSE COUNT ROUTINE)
76	65432	738, 737, 736, 735, 734	(PROGRAM CONTINUE ROUTINE)
(26)	532	737, 735, 734	FORCED BEGIN AND INITIALIZE ROUTINE ENTRY
(27)	5321	737, 735, 734, 733	SYNC RESET SUBROUTINE OVERTIME MESSAGE

ATTACHMENT "A"

SYM	DESCRIPTION	DATE	APPROVAL
REVISIONS			

(34)	543	737, 736, 735	EXERCISE ATTITUDE COMMAND ROUTINE ERROR --- INITIAL CONVERTER NOT STILL SELECTED
36	5432	737, 736, 735, 734	PREPARE TO LAUNCH --- COMMAND TO COMPARE GIVEN AZIMUTH TO STORED AZIMUTH VALUE
(37)	54321	737, 736, 735, 734, 733	RESERVED FOR SIM. FLIGHT
(42)	62	738, 734	RESERVED FOR FLIGHT
(43)	621	738, 734, 733	EXERCISE ATTITUDE COMMAND TEST MAXIMUM ATTAINED ON ONE OR MORE AXES
(45)	631	738, 735, 733	READ INPUT DATA SUBROUTINE OVERTIME MESSAGE
(46)	632	738, 735, 734	EXERCISE ATTITUDE COMMAND TEST DRIVING TOWARD NULL
(47)	6321	738, 735, 734, 733	ERROR MONITOR SUBROUTINE ENTRY
(50)	640	738, 736	ABORT TEST STATUS CODE
(51)	641	738, 736, 733	FORCED BEGIN ROUTINE ERROR --- EMR NON-ZERO
(56)	6432	738, 736, 735, 734	VERIFY AND PREPARE TO LOAD ROUTINE TRYING TO LOAD WITHOUT FIRST LOADING PREVIOUS INFORMATION (IF ANY)
(66)	6532	738, 737, 735, 734	ISSUED ON COMPLETION OR REPEATABLE FLT. SIM. RUN
(70)	6540	738, 737, 736	RESERVED FOR SIM. FLIGHT
77	654321	738, 737, 736, 735, 734, 733	FORCES THE EMR SUBROUTINE TO RETURN TO FORCED BEGIN FBDA
31	541	737, 736, 733	UNASSIGNED
32	542	737, 736, 735	LVDC TM TEST
33	5421	737, 736, 734, 733	UNASSIGNED
41	61	738, 733	UNASSIGNED
44	63	738, 735	UNASSIGNED
61	651	738, 737, 733	UNASSIGNED

MSFC FORM 422 (VERTICAL) (AUGUST 1960)

NOTICE—When Government drawings, specifications, or other data are used for any purpose other than in connection with a definitely related Government procurement operation, the United States Government thereby incurs no responsibility nor obligation whatsoever; and the fact that the Government may have formulated, furnished, or in any way supplied the said drawings specifications or other data is not to be regarded by implication or otherwise as in any manner licensing the holder or any other person or corporation, or conveying any rights or permission to manufacture, use, or sell any patented invention that may in any way be related thereto.

APPLICATION		PART No.	M F	REVISIONS			
NEXT ASSY	USED ON			SYM	DESCRIPTION	DATE	APPROVAL

AS-503

PROGRAM VERIFICATION

LVDC/LVDA DISCRETE INPUT TEST (FT25)

73V1409

UNLESS OTHERWISE SPECIFIED DIMENSIONS ARE IN INCHES TOLERANCES ON: FRACTIONS DECIMALS ANGLES	ORIGINAL DATE OF DRAWING 7/22/68 DRAFTSMAN / CHECKER TRACER / CHECKER ENGINEER / ENGINEER SUBMITTED W. L. Grayson E. N. BRYAN	LVDC/LVDA DISCRETE INPUT TEST (FT25) AS-503	GEORGE C. MARSHALL SPACE FLIGHT CENTER NATIONAL AERONAUTICS AND SPACE ADMINISTRATION HUNTSVILLE, ALABAMA
MATERIAL			
HEAT TREATMENT		SCALE	DWG SIZE A — 73V1409
FINAL PROTECTIVE FINISH	APPROVED R. A. DRAKEY	UNIT WT	SHEET 1 OF 8

REVISIONS			
SYM	DESCRIPTION	DATE	APPROVAL

LVDA/LVDC DISCRETE INPUT TEST PROGRAM (FT25)

1.0 SCOPE

THIS PROCEDURE WILL VERIFY THE GUIDANCE SYSTEM TEST PROGRAM "LVDA/LVDC DISCRETE INPUT TEST (FT25)".

2.0 APPLICABLE GOVERNMENT FURNISHED DOCUMENTS

DRAWINGS AESS LVDA INTERFACE	50M36401
AESS INSTRUMENT UNIT ESE SATURN V	40M14490
INSTRUMENT UNIT ELECTRICAL SCHEMATICS	40M33221
DOCUMENTS IP & C S-IU-503	6009048
TEST PROGRAM SPECIFICATIONS SATURN V LAUNCH COMPUTER COMPLEX AS-503	67-F11-0008
PRELAUNCH CHECKOUT SPECIFICATIONS AND CRITERIA FOR S-IU-503	68-257-0004
OPERATOR REFERENCE MANUAL FOR SLCC PROGRAMMING SYSTEM	68-F11-0003

3.0 GENERAL NOTES

FT25 WILL BE ENTERED FROM KEYBOARD IN ACCORDANCE WITH THE IBM OPERATOR REFERENCE MANUAL. ALL PROGRAM OPTIONS WILL BE EXERCISED AND HARDWARE RESPONSE TO COMPUTER STIMULI WILL BE MONITORED.

4.0 PREREQUISITES

NONE

REVISIONS			
SYM	DESCRIPTION	DATE	APPROVAL

LVDA/LVDC DISCRETE INPUT TEST PROGRAM (FT25)

5.0 PROCEDURE

5.1 VERIFY THAT THE INSTRUMENT UNIT IS POWERED DOWN.

5.2 VERIFY THAT LVDA (603A29) AND LVDC (603A28) STAGE INTERCONNECTING CABLES ARE INSTALLED ACCORDING TO IU CID (40M33080).

5.3 VERIFY THAT POWER SWITCH (S1) ON THE GCP (601-608A13) IS IN THE "OFF" POSITION.

5.4 NOTIFY POWER ROOM TO CLOSE THE IU CIRCUIT BREAKERS AND PLACE THE +6D100 AND +6D200 BACKUP BATTERIES ON-LINE.

5.5 START THE +6D100 AND +6D200 POWER SUPPLIES.

5.6 PLACE THE +6D100 AND +6D200 OUTPUT POWER SWITCHES TO THE "ON" POSITION.

5.7 PLACE THE +6D100 AND +6D200 BACKUP BATTERY ENABLE SWITCHES TO THE "ON" POSITION AND VERIFY BACKUP BATTERY ENABLED INDICATIONS ON EVENTS DISPLAY PANEL.

5.8 POWER THE INSTRUMENT UNIT UNTIL THE "GROUND POWER" INDICATION IS RECEIVED.

5.9 VERIFY THAT GSCU IS ON.

5.10 ADJUST +6D100 AND +6D200 REMOTE VOLTAGE METERS TO READ 28V(+2,-0) VIA THE VOLTAGE INCREASE/DECREASE SWITCHES.

5.11 VERIFY ESE/LVDA SWITCH IN ESE POSITION.

5.12 ISSUE A SWITCH SELECTOR REGISTER TEST FOR THE IU AND VERIFY THE REGISTER TEST INDICATION.

5.13 REQUEST MLF COMPUTER ENGINEERING TO VERIFY THAT COMPUTER PERIPHERAL EQUIPMENT IS READY TO SUPPORT.

5.14 REQUEST TEST CONDUCTOR TO VERIFY THAT LCC & MLF DDAS IS IN "RECEIVE".

5.15 REQUEST THAT S-IVB STAGE APPLY POWER UNTIL "READY FOR POWER TRANSFER" INDICATION IS RECEIVED.

REVISIONS			
SYM	DESCRIPTION	DATE	APPROVAL

5.16 PLACE EDS MODE SWITCH TO OFF POSITION.

5.17 REQUEST S-IVB ENGINEERING TO PLACE SEPARATION SIMULATE SWITCH (S17) ON.

5.18 REQUEST S-II ENGINEERING TO VERIFY THE FOLLOWING SWITCHES:

PROPELLANT DEPLETION DISABLE (S10) -	ON
ALL START TANK VENT (S12)	ON
COMPONENT TEST POWER (S25)	ON
SEPARATION SIMULATE (S33)	ON
HELIUM SUPPLY VALVE OPEN (S4)	ON
PULSE SENSORS SELF TEST	ON

5.19 REQUEST S-IC ENGINEERING TO VERIFY THAT THE SHORTING BAR FOR S-IC/S-II SEPARATION IS INSTALLED.

5.20 PLACE "POWER ON" SWITCH (S1) AT GCP 601-608A13 TO AUTO POSITION.

ENTER FT04, POWER ON OPTION, IN ACCORDANCE WITH THE IBM OPERATOR REFERENCE MANUAL.

5.21 AT SANDERS DISPLAY CONSOLE NO. 2 KEY 7 ENTER LVDC/LVDA DISCRETE INPUT TEST PROGRAM (FT25) IN ACCORDANCE WITH THE IBM OPERATOR REFERENCE MANUAL. EXECUTE AND VERIFY LVDC/LVDA DISCRETE INPUT TEST PROGRAM.

5.22 DURING EXECUTION OF FT25, AT GCP 601-608A13, MONITOR:

DISCRETE INPUT ROUTINE MODE CODE 3
MDI 734 - ON

VERIFY LVDC DISCRETE INPUT, INTERRUPT AND DISCRETE INPUT SPARES ASSIGNMENTS:

LVDA NAME	FUNCTION
DIS 1	THERMAL SWITCH SIM #1
DIS 2	THERMAL SWITCH SIM #2
DIN 5	S-IVB ENGINE OUT "A"
DIN 10	S-II/S-IVB SEPARATION
DIN 11	S-IC INBOARD ENGINE OUT "B"
DIN 12	S-IC/S-II SEPARATION
DIN 13	S-II INBOARD ENGINE OUT
DIN 14	S-IC OUTBOARD ENGINE OUT
DIN 15	S-II AFT SEPARATION
DIN 16	GUIDANCE REFERENCE RELEASE ALERT
DIN 18	S-IC OUTBOARD ENGINE CUTOFF"B"
DIN 19	S-II ENGINES OUT
DIN 21	S-II OUTBOARD ENGINE OUT
DIN 24	LIFT OFF
INT 2	S-IC INBOARD ENGINE OUT "A"

REVISIONS			
SYM	DESCRIPTION	DATE	APPROVAL

LVDA NAME	FUNCTION
INT 4	S-IVB ENGINE OUT "B"
INT 5	S-IC OUTBOARD ENGINES CUTOFF
INT 6	S-II OUTBOARD ENGINES CUTOFF

5.23 MANUALLY ISSUE THE FOLLOWING DISCRETE INPUTS TO THE LVDC BY POSITIONING SWITCHES ON THE S/C CONTROL SUBSTITUTE PANEL. (149-635A8):

(S9) - MANUAL INITIATION OF S-II/S-IVB SEPARATION SEQUENCE "A" - VERIFY DIN 17 ON.

(S11) - S/C CONTROL OF SATURN - VERIFY DIN 9 ON.

(S1) - S-IVB IGNITION SEQUENCE START - VERIFY DIN 20 ON.

(S2) - S-IVB ENGINE CUTOFF-VERIFY DIN 23 ON.

(S12) - TRANSLUNAR INJECTION INHIBIT - VERIFY DIN 6 ON.

(S10) - MANUAL INITIATION OF SII/S-IVB SEPARATION SEQUENCE "B" - VERIFY DIN 22 ON.

REVISIONS			
SYM	DESCRIPTION	DATE	APPROVAL

LVDA STATUS CODE CONVERSION CHART

LVDA	MODE	MDI	SOURCE STATEMENT
00	00	NONE	MODE SORT ROUTINE GROUND ENTRY
01	01	733	(PROGRAM CONTINUE ROUTINE)
02	02	734	ACCELEROMETER PULSE COUNT ROUTINE ENTRY
03	21	734, 733	GIMBAL ANGLE MONITOR ROUTINE ENTRY
04	03	735	DISCRETE INPUT ROUTINE ENTRY
05	31	735, 733	DISCRETE OUTPUT ROUTINE ENTRY
06	32	735, 734	G & C STEERING TEST ENTRY
07	321	735, 734, 733	DOM TEST ROUTINE ENTRY
10	40	736	LADDER ERROR TEST ROUTINE ENTRY
11	41	736, 733	PREPARE TO LAUNCH WITHOUT A PLATFORM
12	42	736, 734	PREPARE TO LAUNCH WITH A PLATFORM
13	421	736, 734, 733	EXERCISE ATTITUDE COMMAND ROUTINE MODE 1 ENTRY
14	43	736, 735	COMPUTER INTERFACE UNIT READ ROUTINE ENTRY
15	431	736, 735, 733	SWITCH SELECTOR ROUTINE ENTRY
16	432	736, 735, 734	SECTOR SUM CHECK ROUTINE ENTRY
17	4321	736, 735, 734, 733	EXERCISE ATTITUDE COMMAND ROUTINE MODE 2 ENTRY
20	50	737	SECTOR DUMP ROUTINE ENTRY
21	51	737, 733	VERIFY AND PREPARE TO LOAD ROUTINE ENTRY
22	52	737, 734	MEMORY ERROR TEST
23	521	737, 734, 733	LOAD ROUTINE ENTRY

REVISIONS			
SYM	DESCRIPTION	DATE	APPROVAL

ATTACHMENT "A"

24	53	737, 735	MINOR LOOP, SWITCH SELECTOR AND REAL TIME COUNTER TESTS ENTRY
25	531	737, 735, 733	UNASSIGNED
30	540	737, 736	PREPARE TO LAUNCH SIM. FLT. WITH A PLATFORM
35	5431	737, 736, 735, 733	COMMAND RECEIVER LINKAGE ROUTINE
40	60	738	POWER UP AND INITIALIZE
52	642	738, 736, 734	UNASSIGNED
53	6421	738, 736, 734, 733	(MINOR LOOP, SWITCH SELECTOR, REAL TIME COUNTER TEST ROUTINE)
54	643	738, 736, 735	(LOAD ROUTINE)
55	6431	738, 736, 735, 733	(MEMORY ERROR TEST ROUTINE)
57	64321	738, 736, 735, 734, 733	(SECTOR DUMP ROUTINE)
60	650	738, 737	(EXERCISE ATTITUDE COMMAND ROUTINE MODE 2)
62	652	738, 737, 734	(SWITCH SELECTOR ROUTINE)
63	6521	738, 737, 734, 733	(COMPUTER INTERFACE UNIT READ ROUTINE)
64	653	738, 737, 735	(EXERCISE ATTITUDE COMMAND ROUTINE MODE 1)
65	6531	738, 737, 735, 733	(PREPARE TO LAUNCH ROUTINE)
67	65321	738, 737, 735, 734, 733	(LADDER ERROR TEST ROUTINE)
71	6541	738, 737, 736, 733	(G & C STEERING TEST ROUTINE)
72	6542	738, 737, 736, 734	(DISCRETE OUTPUT ROUTINE)
73	65421	738, 737, 736, 734, 733	(DISCRETE INPUT ROUTINE)
74	6543	738, 737, 736, 735	(GIMBAL ANGLE MONITOR ROUTINE)
75	65431	738, 737, 736, 735, 733	(ACCELEROMETER PULSE COUNT ROUTINE)
76	65432	738, 737, 736, 735, 734	(PROGRAM CONTINUE ROUTINE)
(26)	532	737, 735, 734	FORCED BEGIN AND INITIALIZE ROUTINE ENTRY
(27)	5321	737, 735, 734, 733	SYNC RESET SUBROUTINE OVERTIME MESSAGE

REVISIONS			
SYM	DESCRIPTION	DATE	APPROVAL

(34)	543	737, 736, 735	EXERCISE ATTITUDE COMMAND ROUTINE ERROR --- INITIAL CONVERTER NOT STILL SELECTED
36	5432	737, 736, 735, 734	PREPARE TO LAUNCH---COMMAND TO COMPARE GIVEN AZIMUTH TO STORED AZIMUTH VALUE.
(37)	54321	737, 736, 735, 734, 733	RESERVED FOR SIM. FLIGHT
(42)	62	738, 734	RESERVED FOR FLIGHT
(43)	621	738, 734, 733	EXERCISE ATTITUDE COMMAND TEST MAXIMUM ATTAINED ON ONE OR MORE AXES
(45)	631	738, 735, 733	READ INPUT DATA SUBROUTINE OVERTIME MESSAGE
(46)	632	738, 735, 734	EXERCISE ATTITUDE COMMAND TEST DRIVING TOWARD NULL
(47)	6321	738, 735, 734, 733	ERROR MONITOR SUBROUTINE ENTRY
(50)	640	738, 736	ABORT TEST STATUS CODE
(51)	641	738, 736, 733	FORCED BEGIN ROUTINE ERROR --- EMR NON-ZERO
56)	6432	738, 736, 735, 734	VERIFY AND PREPARE TO LOAD ROUTINE TRYING TO LOAD WITHOUT FIRST LOADING PREVIOUS INFORMATION (IF ANY)
(66)	6532	738, 737, 735, 734	ISSUED ON COMPLETION OR REPEATABLE FLT. SIM. RUN
(70)	6540	738, 737, 736	RESERVE FOR SIM. FLIGHT
77	654321	738, 737, 736, 735, 734, 733	FORCES THE EMR SUBROUTINE TO RETURN TO FORCED BEGIN FBDA
31	541	737, 736, 733	UNASSIGNED
32	542	737, 736, 735	LVDC TM TEST
33	5421	737, 736, 734, 733	UNASSIGNED
41	61	738, 733	UNASSIGNED
44	63	738, 735	UNASSIGNED
61	651	738, 737, 733	UNASSIGNED

MSFC FORM 422 (VERTICAL) (AUGUST 1960)

NOTICE — When Government drawings, specifications, or other data are used for any purpose other than in connection with a definitely related Government procurement operation, the United States Government thereby incurs no responsibility nor obligation whatsoever; and the fact that the Government may have formulated, furnished, or in any way supplied the said drawings specifications or other data is not to be regarded by implication or otherwise as in any manner licensing the holder or any other person or corporation, or conveying any rights or permission to manufacture, use, or sell any patented invention that may in any way be related thereto.

APPLICATION		PART No.	MF	REVISIONS			
NEXT ASSY	USED ON			SYM	DESCRIPTION	DATE	APPROVAL

AS-503

PROGRAM VERIFICATION

DISCRETE OUTPUT TEST (FT33)

73V1410

UNLESS OTHERWISE SPECIFIED DIMENSIONS ARE IN INCHES TOLERANCES ON: FRACTIONS DECIMALS ANGLES	ORIGINAL DATE OF DRAWING 7/22/68 DRAFTSMAN / CHECKER TRACER / CHECKER ENGINEER / ENGINEER	DISCRETE OUTPUT TEST (FT33) AS-503	GEORGE C. MARSHALL SPACE FLIGHT CENTER NATIONAL AERONAUTICS AND SPACE ADMINISTRATION HUNTSVILLE, ALABAMA
MATERIAL	SUBMITTED E. N. Bryan E. N. BRYAN		
HEAT TREATMENT			
FINAL PROTECTIVE FINISH	APPROVED R. A. Drakey R. A. DRAKEY	SCALE UNIT WT	DWG SIZE A 73V1410 SHEET 1 OF 7

REVISIONS			
SYM	DESCRIPTION	DATE	APPROVAL

LVDA/LVDC DISCRETE OUTPUT TEST PROGRAM (FT33)

1.0 SCOPE

THIS PROCEDURE WILL VERIFY THE GUIDANCE SYSTEM TEST PROGRAM "LVDA/LVDC DISCRETE OUTPUT TEST (FT33).

2.0 APPLICABLE GOVERNMENT FURNISHED DOCUMENTS

DRAWINGS	
AESS LVDA INTERFACE	50M36401
AESS INSTRUMENT UNIT ESE SATURN V	40M14490
INSTRUMENT UNIT ELECTRICAL SCHEMATICS	40M33221
DOCUMENTS	
IP & C S-IU-503	6009048
TEST PROGRAM SPECIFICATIONS SATURN V LAUNCH COMPUTER COMPLEX AS-503	67-F11-0008
PRELAUNCH CHECKOUT SPECIFICATIONS AND CRITERIA FOR S-IU-503	68-257-0004
OPERATOR REFERENCE MANUAL FOR SLCC PROGRAMMING SYSTEM	68-F11-0003

3.0 GENERAL NOTES

FT33 WILL BE ENTERED FROM KEYBOARD IN ACCORDANCE WITH THE IBM OPERATOR REFERENCE MANUAL. ALL PROGRAM OPTIONS WILL BE EXERCISED AND HARDWARE RESPONSE TO COMPUTER STIMULI WILL BE MONITORED.

4.0 PREREQUISITES

NONE

REVISIONS			
SYM	DESCRIPTION	DATE	APPROVAL

LVDA/LVDC DISCRETE OUTPUT TEST PROGRAM (FT33)

5.0 PROCEDURE

5.1 VERIFY THAT THE INSTRUMENT UNIT IS POWERED DOWN.

5.2 VERIFY THAT LVDA (603A29) AND LVDC (603A28) STAGE INTERCONNECTING CABLES ARE INSTALLED ACCORDING TO IU CID (40M33080).

5.3 VERIFY THAT POWER SWITCH (S1) ON THE GCP (601-608A13) IS IN THE "OFF" POSITION.

5.4 NOTIFY POWER ROOM TO CLOSE THE IU CIRCUIT BREAKERS AND PLACE THE +6D100 AND +6D200 BACKUP BATTERIES ON LINE.

5.5 START THE +6D100 AND +6D200 POWER SUPPLIES.

5.6 PLACE THE +6D100 AND +6D200 OUTPUT POWER SWITCHES TO THE "ON" POSITION.

5.7 PLACE THE +6D100 AND +6D200 BACKUP BATTERY ENABLE SWITCHES TO THE "ON" POSITION AND VERIFY BACKUP BATTERY ENABLED INDICATIONS ON EVENTS DISPLAY PANEL.

5.8 POWER THE INSTRUMENT UNIT UNTIL THE "GROUND POWER" INDICATION IS RECEIVED.

5.9 VERIFY THAT GSCU IS ON.

5.10 ADJUST +6D100 AND +6D200 REMOTE VOLTAGE METERS TO READ 28V(+2,-0) VIA THE VOLTAGE INCREASE/DECREASE SWITCHES.

5.11 VERIFY ESE/LVDA SWITCH IN ESE POSITION.

5.12 ISSUE A SWITCH SELECTOR REGISTER TEST FOR THE IU AND VERIFY THE REGISTER TEST INDICATION.

5.13 REQUEST MLF COMPUTER ENGINEERING TO VERIFY THAT COMPUTER PERIPHERAL EQUIPMENT IS READY TO SUPPORT.

5.14 REQUEST TEST CONDUCTOR TO VERIFY THAT LCC & MLF DDAS IS IN "RECEIVE".

5.15 REQUEST THAT S-IVB STAGE APPLY POWER UNTIL "READY FOR POWER TRANSFER" INDICATION IS RECEIVED.

REVISIONS			
SYM	DESCRIPTION	DATE	APPROVAL

LVDA/LVDC DISCRETE OUTPUT TEST PROGRAM (FT33)

5.0 PROCEDURES (Cont'd)

5.16 PLACE "POWER ON" SWITCH (S1) AT GCP 601-608A13 TO AUTO POSITION.

5.17 ENTER FTO4, POWER ON OPTION, IN ACCORDANCE WITH THE IBM OPERATOR REFERENCE MANUAL.

5.18 AT SANDERS DISPLAY CONSOLE NO. 2 KEY 7 ENTER LVDC/LVDA DISCRETE OUTPUT TEST PROGRAM (FT33) IN ACCORDANCE WITH THE IBM OPERATOR REFERENCE MANUAL. EXECUTE AND VERIFY LVDC/LVDA DISCRETE OUTPUT TEST PROGRAM.

DURING EXECUTION OF FT33, AT GCP 601-608A13, MONITOR:

DISCRETE OUTPUT ROUTINE MODE CODE 41
MDI 735, 733 - ON

VERIFY LVDC DISCRETE OUTPUT ASSIGNMENTS

LVDA NAME	FUNCTION	MDI
DO 4	GUIDANCE FAILURE	0862
12	INDICATION OF GRR (LVDA FIRING COMMIT ENABLE)	0834
13	TLC OR GUIDANCE ERROR (LVDA FIRING COMMIT IN HIBIT)	0835

REVISIONS			
SYM	DESCRIPTION	DATE	APPROVAL

ATTACHMENT "A"

LVDA STATUS CODE CONVERSION CHART

LVDA	MODE	MDI	SOURCE STATEMENT
00	00	NONE	MODE SORT ROUTINE GROUND ENTRY
01	01	733	(PROGRAM CONTINUE ROUTINE)
02	02	734	ACCELEROMETER PULSE COUNT ROUTINE ENTRY
03	21	734, 733	GIMBAL ANGLE MONITOR ROUTINE ENTRY
04	03	735	DISCRETE INPUT ROUTINE ENTRY
05	31	735, 733	DISCRETE OUTPUT ROUTINE ENTRY
06	32	735, 734	G & C STEERING TEST ENTRY
07	321	735, 734, 733	DOM TEST ROUTINE ENTRY
10	40	736	LADDER ERROR TEST ROUTINE ENTRY
11	41	736, 733	PREPARE TO LAUNCH WITHOUT A PLATFORM
12	42	736, 734	PREPARE TO LAUNCH WITH A PLATFORM
13	421	736, 734, 733	EXERCISE ATTITUDE COMMAND ROUTINE MODE 1 ENTRY
14	43	736, 735	COMPUTER INTERFACE UNIT READ ROUTINE ENTRY
15	431	736, 735, 733	SWITCH SELECTOR ROUTINE ENTRY
16	432	736, 735, 734	SECTOR SUM CHECK ROUTINE ENTRY
17	4321	736, 735, 734, 733	EXERCISE ATTITUDE COMMAND ROUTINE MODE 2 ENTRY
20	50	737	SECTOR DUMP ROUTINE ENTRY
21	51	737, 733	VERIFY AND PREPARE TO LOAD ROUTINE ENTRY
22	52	737, 734	MEMORY ERROR TEST
23	521	737, 734, 733	LOAD ROUTINE ENTRY

REVISIONS			
SYM	DESCRIPTION	DATE	APPROVAL

ATTACHMENT "A"

24	53	737, 735	MINOR LOOP, SWITCH SELECTOR AND REAL TIME COUNTER TESTS ENTRY
25	531	737, 735, 733	UNASSIGNED
30	540	737, 736	PREPARE TO LAUNCH SIM. FLT. WITH A PLATFORM
35	5431	737, 736, 735, 733	COMMAND RECEIVER LINKAGE ROUTINE
40	60	738	POWER UP AND INITIALIZE
52	642	738, 736, 734	UNASSIGNED
53	6421	738, 736, 734, 733	(MINOR LOOP, SWITCH SELECTOR, REAL TIME COUNTER TEST ROUTINE)
54	643	738, 736, 735	(LOAD ROUTINE)
55	6431	738, 736, 735, 733	(MEMORY ERROR TEST ROUTINE)
57	64321	738, 736, 735, 734, 733	(SECTOR DUMP ROUTINE)
60	650	738, 737	(EXERCISE ATTITUDE COMMAND ROUTINE MODE 2)
62	652	738, 737, 734	(SWITCH SELECTOR ROUTINE)
63	6521	738, 737, 734, 733	(COMPUTER INTERFACE UNIT READ ROUTINE)
64	653	738, 737, 735	(EXERCISE ATTITUDE COMMAND ROUTINE MODE 1)
65	6531	738, 737, 735, 733	(PREPARE TO LAUNCH ROUTINE)
67	65321	738, 737, 735, 734, 733	(LADDER ERROR TEST ROUTINE)
71	6541	738, 737, 736, 733	(G & C STEERING TEST ROUTINE)
72	6542	738, 737, 736, 734	(DISCRETE OUTPUT ROUTINE)
73	65421	738, 737, 736, 734, 733	(DISCRETE INPUT ROUTINE)
74	6543	738, 737, 736, 735	(GIMBAL ANGLE MONITOR ROUTINE)
75	65431	738, 737, 736, 735, 733	(ACCELEROMETER PULSE COUNT ROUTINE)
76	65432	738, 737, 736, 735, 734	(PROGRAM CONTINUE ROUTINE)
(26)	532	737, 735, 734	FORCED BEGIN AND INITIALIZE ROUTINE ENTRY
(27)	5321	737, 735, 734, 733	SYNC RESET SUBROUTINE OVERTIME MESSAGE

ATTACHMENT "A"

REVISIONS			
SYM	DESCRIPTION	DATE	APPROVAL

(34)	543	737, 736, 735	EXERCISE ATTITUDE COMMAND ROUTINE ERROR --- INITIAL CONVERTER NOT STILL SEIECTED
36	5432	737, 736, 735, 734	PREPARE TO LAUNCH---COMMAND TO COMPARE GIVEN AZIMUTH TO STORE AZIMUTH VALUE
(37)	54321	737, 736, 735, 734, 733	RESERVED FOR SIM. FLIGHT
(42)	62	738, 734	RESERVED FOR FLIGHT
(43)	621	738, 734, 733	EXERCISE ATTITUDE COMMAND TEST MAXIMUM ATTAINED ON ONE OR MORE AXES
(45)	631	738, 735, 733	READ INPUT DATA SUBROUTINE OVERTIME MESSAGE
(46)	632	738, 735, 734	EXERCISE ATTITUDE COMMAND TEST DRIVING TOWARD NULL
(47)	6321	738, 735, 734, 733	ERROR MONITOR SUBROUTINE ENTRY
(50)	640	738, 736	ABORT TEST STATUS CODE
(51)	641	738, 736, 733	FORCED BEGIN ROUTINE ERROR --- EMR NON-ZERO
(56)	6432	738, 736, 735, 734	VERIFY AND PREPARE TO LOAD ROUTINE TRYING TO LOAD WITHOUT FIRST LOADING PREVIOUS INFORMATION (IF ANY)
(66)	6532	738, 737, 735, 734	ISSUED ON COMPLETION OR REPEATABLE FLT. SIM. RUN
(70)	6540	738, 737, 736	RESERVE FOR SIM. FLIGHT
77	654321	738, 737, 736, 735, 734, 733	FORCES THE EMR SUBROUTINE TO RETURN TO FORCED BEGIN FBDA
31	541	737, 736, 733	UNASSIGNED
32	542	737, 736, 734	LVDC TM TEST
33	5421	737, 736, 734, 733	UNASSIGNED
41	61	738, 733	UNASSIGNED
44	63	738, 735	UNASSIGNED
61	651	738, 737, 733	UNASSIGNED

MSFC FORM 422 (VERTICAL) (AUGUST 1960)

NOTICE — When Government drawings, specifications, or other data are used for any purpose other than in connection with a definitely related Government procurement operation, the United States Government thereby incurs no responsibility nor obligation whatsoever; and the fact that the Government may have formulated, furnished, or in any way supplied the said drawings specifications or other data is not to be regarded by implication or otherwise as in any manner licensing the holder or any other person or corporation, or conveying any rights or permission to manufacture, use, or sell any patented invention that may in any way be related thereto.

APPLICATION		PART No.	M F	REVISIONS			
NEXT ASSY	USED ON			SYM	DESCRIPTION	DATE	APPROVAL

AS-503

PROGRAM VERIFICATION

ACCELEROMETER PULSE COUNT TEST (FT31)

73V1411

UNLESS OTHERWISE SPECIFIED DIMENSIONS ARE IN INCHES TOLERANCES ON: FRACTIONS DECIMALS ANGLES	ORIGINAL DATE OF DRAWING 7/19/68 DRAFTSMAN / CHECKER TRACER / CHECKER ENGINEER / ENGINEER	ACCELEROMETER PULSE COUNT TEST (FT31) AS-503	GEORGE C. MARSHALL SPACE FLIGHT CENTER NATIONAL AERONAUTICS AND SPACE ADMINISTRATION HUNTSVILLE, ALABAMA
MATERIAL	SUBMITTED E. N. Bryan E. N. BRYAN		
HEAT TREATMENT			
FINAL PROTECTIVE FINISH	APPROVED R. A. Drakey R. A. DRAKEY	SCALE / UNIT WT	DWG SIZE A — 73V1411 — SHEET 1 OF 7

REVISIONS			
SYM	DESCRIPTION	DATE	APPROVAL

1.0 SCOPE

THIS PROCEDURE WILL VERIFY THE GUIDANCE SYSTEM TEST PROGRAM "ACCELEROMETER PULSE COUNT TEST (FT31)".

2.0 APPLICABLE GOVERNMENT FURNISHED DOCUMENTS

DRAWINGS AESS LVDA INTERFACE	50M36401
AESS INSTRUMENT UNIT ESE SATURN V	40M14490
INSTRUMENT UNIT ELECTRICAL SCHEMATICS	40M33221
DOCUMENTS IP & C S-IU-503	6009048
TEST PROGRAM SPECIFICATIONS SATURN V LAUNCH COMPUTER COMPLEX AS-503	67-F11-0008
PRELAUNCH CHECKOUT SPECIFICATIONS AND CRITERIA FOR S-IU-503	68-257-0004
OPERATOR REFERENCE MANUAL FOR SLCC PROGRAMMING SYSTEM	68-F11-0003

3.0 GENERAL NOTES

FT31 WILL BE ENTERED FROM KEYBOARD IN ACCORDANCE WITH THE IBM OPERATOR REFERENCE MANUAL. ALL PROGRAM OPTIONS WILL BE EXERCISED AND HARDWARE RESPONSE TO COMPUTER STIMULI WILL BE MONITORED.

4.0 PREREQUISITES

None

REVISIONS			
SYM	DESCRIPTION	DATE	APPROVAL

ACCELEROMETER PULSE COUNT TEST PROGRAM (FT31)

5.0 PROCEDURE

5.1 VERIFY THAT THE INSTRUMENT UNIT IS POWERED DOWN.

5.2 VERIFY THAT LVDA (603A29) and LVDC (603A28) STAGE INTERCONNECTING CABLES ARE INSTALLED ACCORDING TO IU CID (40M33080).

5.3 VERIFY THAT POWER SWITCH (S1) ON THE GCP (601-608A13) IS IN THE "OFF" POSITION.

5.4 NOTIFY POWER ROOM TO CLOSE THE IU CIRCUIT BREAKERS AND PLACE THE +6D100 AND +6D200 BACKUP BATTERIES ON LINE.

5.5 START THE +6D100 AND +6D200 POWER SUPPLIES.

5.6 PLACE THE +6D100 AND +6D200 POWER SWITCHES TO THE "ON" POSITION.

5.7 PLACE THE +6D100 AND +6D200 BACKUP BATTERY ENABLE SWITCHES TO THE "ON" POSITION AND VERIFY BACKUP BATTERY ENABLED INDICATIONS ON EVENTS DISPLAY PANEL.

5.8 POWER THE INSTRUMENT UNIT UNTIL THE "GROUND POWER" INDICATION IS RECEIVED.

5.9 VERIFY THAT GSCU IS ON.

5.10 ADJUST +6D100 AND +6D200 REMOTE VOLTAGE METERS TO READ 28V (+2, -0) VIA THE VOLTAGE INCREASE/DECREASE SWITCHES.

5.11 VERIFY ESE/LVDA SWITCH IN ESE POSITION.

5.12 ISSUE A SWITCH SELECTOR REGISTER TEST FOR THE IU AND VERIFY THE REGISTER TEST INDICATION.

5.13 REQUEST MLF COMPUTER ENGINEERING TO VERIFY THAT COMPUTER PERIPHERAL EQUIPMENT IS READY TO SUPPORT.

5.14 REQUEST TEST CONDUCTOR TO VERIFY THAT LCC & MLF DDAS IS IN "RECEIVE".

5.15 REQUEST THAT S-IVB STAGE APPLY POWER UNTIL "READY FOR POWER TRANSFER" INDICATION IS RECEIVED.

REVISIONS			
SYM	DESCRIPTION	DATE	APPROVAL

5.0 PROCEDURES (Cont'd)

5.16 POWER UP ST-124M PLATFORM

5.17 PLACE "POWER ON" SWITCH (S1) AT GCP 601-608A13 TO AUTO POSITION.

5.18 ENTER FT04, POWER ON OPTION, IN ACCORDANCE WITH THE IBM OPERATOR REFERENCE MANUAL.

5.19 AT SANDERS DISPLAY CONSOLE NO. 2 KEY 7 ENTER ACCELEROMETER PULSE COUNT TEST PROGRAM (FT31) IN ACCORDANCE WITH THE IBM OPERATOR REFERENCE MANUAL. EXECUTE AND VERIFY ACCELEROMETER PULSE COUNT TEST PROGRAM (FT31).

DURING EXECUTION OF (FT31), AT GCP 601-608A13, MONITOR:

ACCELEROMETER PULSE COUNT ROUTINE MODE CODE 02
MDI 734 - ON

ATTACHMENT "A"

REVISIONS		
SYM	DESCRIPTION	DATE

LVDA STATUS CODE CONVERSION CHART

LVDA	MODE	MDI	SOURCE STATEMENT
00	00	NONE	MODE SORT ROUTINE GROUND ENTRY
01	01	733	(PROGRAM CONTINUE ROUTINE)
02	02	734	ACCELEROMETER PULSE COUNT ROUTINE ENTRY
03	21	734, 733	GIMBAL ANGLE MONITOR ROUTINE ENTRY
04	03	735	DISCRETE INPUT ROUTINE ENTRY
05	31	735, 733	DISCRETE OUTPUT ROUTINE ENTRY
06	32	735, 734	G & C STEERING TEST ENTRY
07	321	735, 734, 733	DOM TEST ROUTINE ENTRY
10	40	736	LADDER ERROR TEST ROUTINE ENTRY
11	41	736, 733	PREPARE TO LAUNCH WITHOUT A PLATFORM
12	42	736, 734	PREPARE TO LAUNCH WITH A PLATFORM
13	421	736, 734, 733	EXERCISE ATTITUDE COMMAND ROUTINE MODE 1 ENTRY
14	43	736, 735	COMPUTER INTERFACE UNIT READ ROUTINE ENTRY
15	431	736, 735, 733	SWITCH SELECTOR ROUTINE ENTRY
16	432	736, 735, 734	SECTOR SUM CHECK ROUTINE ENTRY
17	4321	736, 735, 734, 733	EXERCISE ATTITUDE COMMAND ROUTINE MODE 2 ENTRY
20	50	737	SECTOR DUMP ROUTINE ENTRY
21	51	737, 733	VERIFY AND PREPARE TO LOAD ROUTINE ENTRY
22	52	737, 734	MEMORY ERROR TEST
23	521	737, 734, 733	LOAD ROUTINE ENTRY

REVISIONS			
SYM	DESCRIPTION	DATE	APPROVAL

ATTACHMENT "A"

24	53	737, 735	MINOR LOOP, SWITCH SELECTOR AND REAL TIME COUNTER TESTS ENTRY
25	531	737, 735, 733	UNASSIGNED
30	540	737, 736	PREPARE TO LAUNCH SIM. FLT. WITH A PLATFORM
35	5431	737, 736, 735, 733	COMMAND RECEIVER LINKAGE ROUTINE
40	60	738	POWER UP AND INITIALIZE
52	642	738, 736, 734	UNASSIGNED
53	6421	738, 736, 734, 733	(MINOR LOOP, SWITCH SELECTOR, REAL TIME COUNTER TEST ROUTINE)
54	643	738, 736, 735	(LOAD ROUTINE)
55	6431	738, 736, 735, 733	(MEMORY ERROR TEST ROUTINE)
57	64321	738, 736, 735, 734, 733	(SECTOR DUMP ROUTINE)
60	650	738, 737	(EXERCISE ATTITUDE COMMAND ROUTINE MODE 2)
62	652	738, 737, 734	(SWITCH SELECTOR ROUTINE)
63	6521	738, 737, 734, 733	(COMPUTER INTERFACE UNIT READ ROUTINE)
64	653	738, 737, 735	(EXERCISE ATTITUDE COMMAND ROUTINE MODE 1)
65	6531	738, 737, 735, 733	(PREPARE TO LAUNCH ROUTINE)
67	65321	738, 737, 735, 734, 733	(LADDER ERROR TEST ROUTINE)
71	6541	738, 737, 736, 733	(G & C STEERING TEST ROUTINE)
72	6542	738, 737, 736, 734	(DISCRETE OUTPUT ROUTINE)
73	65421	738, 737, 736, 734, 733	(DISCRETE INPUT ROUTINE)
74	6543	738, 737, 736, 735	(GIMBAL ANGLE MONITOR ROUTINE)
75	65431	738, 737, 736, 735, 733	(ACCELEROMETER PULSE COUNT ROUTINE)
76	65432	738, 737, 736, 735, 734	(PROGRAM CONTINUE ROUTINE)
(26)	532	737, 735, 734	FORCED BEGIN AND INITIALIZE ROUTINE ENTRY
(27)	5321	737, 735, 734, 733	SYNC RESET SUBROUTINE OVERTIME MESSAGE

REVISIONS			
SYM	DESCRIPTION	DATE	APPROVAL

ATTACHMENT "A"

(34)	543	737, 736, 735	EXERCISE ATTITUDE COMMAND ROUTINE ERROR --- INITIAL CONVERTER NOT STILL SELECTED
36	5432	737, 736, 735, 734	PREPARE TO LAUNCH---COMMAND TO COMPARE GIVEN AZIMUTH TO STORED AZIMUTH VALUE
(37)	54321	737, 736, 735, 734, 733	RESERVED FOR SIM. FLIGHT
(42)	62	738, 734	RESERVED FOR FLIGHT
(43)	621	738, 734, 733	EXERCISE ATTITUDE COMMAND TEST MAXIMUM ATTAINED ON ONE OR MORE AXES
(45)	631	738, 735, 733	READ INPUT DATA SUBROUTINE OVERTIME MESSAGE
(46)	632	738, 735, 734	EXERCISE ATTITUDE COMMAND TEST DRIVING TOWARD NULL
(47)	6321	738, 735, 734, 733	ERROR MONITOR SUBROUTINE ENTRY
(50)	640	738, 736	ABORT TEST STATUS CODE
(51)	641	738, 736, 733	FORCED BEGIN ROUTINE ERROR --- EMR NON-ZERO
(56)	6432	738, 736, 735, 734	VERIFY AND PREPARE TO LOAD ROUTINE TRYING TO LOAD WITHOUT FIRST LOADING PREVIOUS INFORMATION (IF ANY)
(66)	6532	738, 737, 735, 734	ISSUED ON COMPLETION OR REPEATABLE FLT. SIM. RUN
(70)	6540	738, 737, 736	RESERVE FOR SIM. FLIGHT
77	654321	738, 737, 736, 735, 734, 733	FORCES THE EMR SUBROUTINE TO RETURN TO FORCED BEGIN FBDA
31	541	737, 736, 733	UNASSIGNED
32	542	737, 736, 734	LVDC TM TEST
33	5421	737, 736, 734, 733	UNASSIGNED
41	61	738, 733	UNASSIGNED
44	63	738, 735	UNASSIGNED
61	651	738, 737, 733	UNASSIGNED

MSFC FORM 422 (VERTICAL) (AUGUST 1960)

NOTICE—When Government drawings, specifications, or other data are used for any purpose other than in connection with a definitely related Government procurement operation, the United States Government thereby incurs no responsibility nor obligation whatsoever; and the fact that the Government may have formulated, furnished, or in any way supplied the said drawings specifications or other data is not to be regarded by implication or otherwise as in any manner licensing the holder or any other person or corporation, or conveying any rights or permission to manufacture, use, or sell any patented invention that may in any way be related thereto.

APPLICATION		PART No.	M F	REVISIONS			
NEXT ASSY	USED ON			SYM	DESCRIPTION	DATE	APPROVAL

AS-503

PROGRAM VERIFICATION

LVDC SECTOR SUM CHECK (FT23)

72V1412

UNLESS OTHERWISE SPECIFIED DIMENSIONS ARE IN INCHES TOLERANCES ON: FRACTIONS DECIMALS ANGLES	ORIGINAL DATE OF DRAWING 7/19/68	LVDC SECTOR SUM CHECK (FT23) AS-503	GEORGE C. MARSHALL SPACE FLIGHT CENTER NATIONAL AERONAUTICS AND SPACE ADMINISTRATION HUNTSVILLE, ALABAMA
MATERIAL	DRAFTSMAN / CHECKER TRACER / CHECKER ENGINEER / ENGINEER		
HEAT TREATMENT	SUBMITTED E. N. Bryan E. N. BRYAN		
FINAL PROTECTIVE FINISH	APPROVED R. A. Drakey R. A. DRAKEY	SCALE UNIT WT	DWG SIZE A 73V1412 SHEET 1 OF 7

REVISIONS			
SYM	DESCRIPTION	DATE	APPROVAL

LVDA/LVDC SECTOR SUM CHECK TEST PROGRAM (FT23)

1.0 SCOPE

THIS PROCEDURE WILL VERIFY THE GUIDANCE SYSTEM TEST PROGRAM "LVDA/LVDC SECTOR SUM CHECK TEST (FT23)."

2.0 APPLICABLE GOVERNMENT FURNISHED DOCUMENTS

DRAWINGS AESS LVDA INTERFACE	50M36401
AESS INSTRUMENT UNIT ESE SATURN V	40M14490
INSTRUMENT UNIT ELECTRICAL SCHEMATICS	40M33221
DOCUMENTS IP & C S-IU-503	6009048
TEST PROGRAM SPECIFICATIONS SATURN V LAUNCH COMPUTER COMPLEX AS-503	67-F11-0008
PRELAUNCH CHECKOUT SPECIFICATIONS AND CRITERIA FOR S-IU-503	68-257-0004
OPERATOR REFERENCE MANUAL FOR SLCC PROGRAMMING SYSTEM	68-F11-0003

3.0 GENERAL NOTES

FT23 WILL BE ENTERED FROM KEYBOARD IN ACCORDANCE WITH THE IBM OPERATOR REFERENCE MANUAL. ALL PROGRAM OPTIONS WILL BE EXERCISED AND HARDWARE RESPONSE TO COMPUTER STIMULI WILL BE MONITORED.

4.0 PREREQUISITES

NONE

REVISIONS			
SYM	DESCRIPTION	DATE	APPROVAL

LVDA/LVDC SECTOR SUM CHECK TEST PROGRAM (FT23)

5.0 PROCEDURE

5.1 VERIFY THAT THE INSTRUMENT UNIT IS POWERED DOWN.

5.2 VERIFY THAT LVDA (603A29) AND LVDC (603A28) STAGE INTERCONNECTING CABLES ARE INSTALLED ACCORDING TO IU CID (40M33080).

5.3 VERIFY THAT POWER SWITCH (S1) ON THE GCP (601-608A13) IS IN THE "OFF" POSITION.

5.4 NOTIFY POWER ROOM TO CLOSE THE IU CIRCUIT BREAKERS AND PLACE THE +6D100 AND +6D200 BACKUP BATTERIES ON LINE.

5.5 START THE +6D100 AND +6D200 POWER SUPPLIES.

5.6 PLACE THE +6D100 AND +6D200 OUTPUT POWER SWITCHES TO THE "ON" POSITION.

5.7 PLACE THE +6D100 AND +6D200 BACKUP BATTERY ENABLE SWITCHES TO THE "ON" POSITION AND VERIFY BACKUP BATTERY ENABLED INDICATIONS ON EVENTS DISPLAY PANEL.

5.8 POWER THE INSTRUMENT UNIT UNTIL THE "GROUND POWER" INDICATION IS RECEIVED.

5.9 VERIFY THAT GSCU IS ON.

5.10 ADJUST +6D100 AND +6D200 REMOTE VOLTAGE METERS TO READ 28V(+2,-0) VIA THE VOLTAGE INCREASE/DECREASE SWITCHES.

5.11 VERIFY ESE/LVDA SWITCH IN ESE POSITION.

5.12 ISSUE A SWITCH SELECTOR REGISTER TEST FOR THE IU AND VERIFY THE REGISTER TEST INDICATION.

5.13 REQUEST MLF COMPUTER ENGINEERING TO VERIFY THAT COMPUTER PERIPHERAL EQUIPMENT IS READY TO SUPPORT.

5.14 REQUEST TEST CONDUCTOR TO VERIFY THAT LCC & MLF DDAS IN IN "RECEIVE".

5.15 REQUEST THAT S-IVB STAGE APPLY POWER UNTIL "READY FOR POWER TRANSFER" INDICATION IS RECEIVED.

REVISIONS			
SYM	DESCRIPTION	DATE	APPROVAL

5.0 PROCEDURES (Cont'd)

5.16 PLACE "POWER ON" SWITCH (S1) AT GCP 601-608A13 TO AUTO POSITION.

5.17 ENTER FT04, POWER ON OPTION, IN ACCORDANCE WITH THE IBM OPERATOR REFERENCE MANUAL.

5.18 ENTER FT37, REPEATABLE SIM FLIGHT OPTION, IN ACCORDANCE WITH THE IBM OPERATOR REFERENCE MANUAL.

5.19 AT SANDERS DISPLAY CONSOLE NO. 2 KEY #7 ENTER LVDC SECTOR SUM CHECK PROGRAM (FT23) IN ACCORDANCE WITH THE IBM OPERATOR REFERENCE MANUAL. EXECUTE AND VERIFY SECTOR SUM CHECK.

DURING EXECUTION OF FT23, AT GCP 601-608A13, MONITOR:

SECTOR SUM CHECK ROUTINE MODE CODE 432
MDI 736, 735, 734, - ON

5.20 NOTE ANY DIFFERENCES BETWEEN EXPECTED AND RECEIVED DATA AND THE MODULE AND SECTOR IN WHICH THE NON-COMPARE OCCURRED.

ATTACHMENT "A"

REVISIONS			
SYM	DESCRIPTION	DATE	APPROVAL

LVDA STATUS CODE CONVERSION CHART

LVDA	MODE	MDI	SOURCE STATEMENT
00	00	NONE	MODE SORT ROUTINE GROUND ENTRY
01	01	733	(PROGRAM CONTINUE ROUTINE)
02	02	734	ACCELEROMETER PULSE COUNT ROUTINE ENTRY
03	21	734, 733	GIMBAL ANGLE MONITOR ROUTINE ENTRY
04	03	735	DISCRETE INPUT ROUTINE ENTRY
05	31	735, 733	DISCRETE OUTPUT ROUTINE ENTRY
06	32	735, 734	G & C STEERING TEST ENTRY
07	321	735, 734, 733	DOM TEST ROUTINE ENTRY
10	40	736	LADDER ERROR TEST ROUTINE ENTRY
11	41	736, 733	PREPARE TO LAUNCH WITHOUT A PLATFORM
12	42	736, 734	PREPARE TO LAUNCH WITH A PLATFORM
13	421	736, 734, 733	EXERCISE ATTITUDE COMMAND ROUTINE MODE 1 ENTRY
14	43	736, 735	COMPUTER INTERFACE UNIT READ ROUTINE ENTRY
15	431	736, 735, 733	SWITCH SELECTOR ROUTINE ENTRY
16	432	736, 735, 734	SECTOR SUM CHECK ROUTINE ENTRY.
17	4321	736. 735, 734, 733	EXERCISE ATTITUDE COMMAND ROUTINE MODE 2 ENTRY
20	50	737	SECTOR DUMP ROUTINE ENTRY
21	51	737, 733	VERIFY AND PREPARE TO LOAD ROUTINE ENTRY
22	52	737, 734	MEMORY ERROR TEST
23	521	737, 734, 733	LOAD ROUTINE ENTRY

REVISIONS			
SYM	DESCRIPTION	DATE	APPROVAL

ATTACHMENT "A"

24	53	737, 735	MINOR LOOP, SWITCH SELECTOR AND REAL TIME COUNTER TESTS ENTRY
25	531	737, 735, 733	UNASSIGNED
30	540	737, 736	PREPARE TO LAUNCH SIM. FLT. WITH A PLATFORM
35	5431	737, 736, 735, 733	COMMAND RECEIVER LINKAGE ROUTINE
40	60	738	POWER UP AND INITIALIZE
52	642	738, 736, 734	UNASSIGNED
53	6421	738, 736, 734, 733	(MINOR LOOP, SWITCH SELECTOR, REAL TIME COUNTER TEST ROUTINE)
54	643	738, 736, 735	(LOAD ROUTINE)
55	6431	738, 736, 735, 733	(MEMORY ERROR TEST ROUTINE)
57	64321	738, 736, 735, 734, 733	(SECTOR DUMP ROUTINE)
60	650	738, 737	(EXERCISE ATTITUDE COMMAND ROUTINE MODE 2)
62	652	738, 737, 734	(SWITCH SELECTOR ROUTINE)
63	6521	738, 737, 734, 733	(COMPUTER INTERFACE UNIT READ ROUTINE)
64	653	738, 737, 735	(EXERCISE ATTITUDE COMMAND ROUTINE MODE 1)
65	6531	738, 737, 735, 733	(PREPARE TO LAUNCH ROUTINE)
67	65321	738, 737, 735, 734, 733	(LADDER ERROR TEST ROUTINE)
71	6541	738, 737, 736, 733	(G & C STEERING TEST ROUTINE)
72	6542	738, 737, 736, 734	(DISCRETE OUTPUT ROUTINE)
73	65421	738, 737, 736, 734, 733	(DISCRETE INPUT ROUTINE)
74	6543	738, 737, 736, 735	(GIMBAL ANGLE MONITOR ROUTINE)
75	65431	738, 737, 736, 735, 733	(ACCEIEROMETER PULSE COUNT ROUTINE)
76	65432	738, 737, 736, 735, 734	(PROGRAM CONTINUE ROUTINE)
(26)	532	737. 735, 734	FORCED BEGIN AND INITIALIZE ROUTINE ENTRY
(27)	5321	737, 735, 734, 733	SYNC RESET SUBROUTINE OVERTIME MESSAGE

ATTACHMENT "A"

SYM	DESCRIPTION	DATE	APPROVAL
REVISIONS			

(34)	543	737, 736, 735	EXERCISE ATTITUDE COMMAND ROUTINE ERROR --- INITIAL CONVERTER NOT STILL SELECTED
36	5432	737, 736, 735, 734	PREPARE TO LAUNCH---COMMAND TO COMPARE GIVEN AZIMUTH TO STORED AZIMUTH VALUE.
(37)	54321	737, 736, 735, 734, 733	RESERVED FOR SIM. FLIGHT
(42)	62	738, 734	RESERVED FOR FLIGHT
(43)	621	738, 734, 733	EXERCISE ATTITUDE COMMAND TEST MAXIMUM ATTAINED ON ONE OR MORE AXES
(45)	631	738, 735, 733	READ INPUT DATA SUBROUTINE OVERTIME MESSAGE
(46)	632	738, 735, 734	EXERCISE ATTITUDE COMMAND TEST DRIVING TOWARD NULL
(47)	6321	738, 735, 734, 733	ERROR MONITOR SUBROUTINE ENTRY
(50)	640	738, 736	ABORT TEST STATUS CODE
(51)	641	738, 736, 733	FORCED BEGIN ROUTINE ERROR---EMR NON-ZERO
(56)	6432	738, 736, 735, 734	VERIFY AND PREPARE TO LOAD ROUTINE TRYING TO LOAD WITHOUT FIRST LOADING PREVIOUS INFORMATION (IF ANY)
(66)	6532	738, 737, 735, 734	ISSUE ON COMPLETION OR REPEATABLE FLT. SIM. RUN
(70)	6540	738, 737, 736	RESERVE FOR SIM. FLIGHT
77	654321	738, 737, 736, 735, 734, 733	FORCES THE EMR SUBROUTINE TO RETURN TO FORCED BEGIN FBDA
31	541	737, 736, 733	UNASSIGNED
32	542	737, 736, 734	LVDC TM TEST
33	5421	737, 736, 734, 733	UNASSIGNED
41	61	738, 733	UNASSIGNED
44	63	738, 735	UNASSIGNED
61	651	738, 737, 733	UNASSINGED

[illegible] specifications prepared [illegible] drawings, specifications, or other data are used for any purpose other than in connection with a [illegible] contract with, or [illegible] furnished, or in any way supplied the said drawings, specifications, or other data is not to be regarded by implication or otherwise as in any manner licensing the holder or any other person or corporation, or conveying any rights or permission to manufacture, use, or sell any patented invention that may in any way be related thereto.

APPLICATION		PART No.	MF	REVISIONS			
NEXT ASSY	USED ON			SYM	DESCRIPTION	DATE	APPROVAL

AS-503

PROGRAM VERIFICATION

DIGITAL COMMAND SYSTEMS TEST (FT45)

73V1413

UNLESS OTHERWISE SPECIFIED DIMENSIONS ARE IN INCHES TOLERANCES ON: FRACTIONS DECIMALS ANGLES	ORIGINAL DATE OF DRAWING 6/19/68 DRAFTSMAN / CHECKER TRACER / CHECKER ENGINEER / ENGINEER	DIGITAL COMMAND SYSTEMS TEST (FT45)	GEORGE C. MARSHALL SPACE FLIGHT CENTER NATIONAL AERONAUTICS AND SPACE ADMINISTRATION HUNTSVILLE, ALABAMA
MATERIAL	SUBMITTED E. N. Bryan E. N. BRYAN		
HEAT TREATMENT			
FINAL PROTECTIVE FINISH	APPROVED R. A. Drakey R. A. DRAKEY	SCALE UNIT WT	DWG SIZE A 73V1413 SHEET 1 OF 7

REVISIONS			
SYM	DESCRIPTION	DATE	APPROVAL

DIGITAL COMMAND SYSTEM TEST PROGRAM (FT45)

1.0 SCOPE

THIS PROCEDURE WILL VERIFY THE GUIDANCE SYSTEM TEST PROGRAM "DIGITAL COMMAND SYSTEM TEST (FT45)".

2.0 APPLICABLE GOVERNMENT FURNISHED DOCUMENTS

DRAWINGS	
AESS LVDA INTERFACE	50M36401
AESS INSTRUMENT UNIT ESE SATURN V	40M14490
INSTRUMENT UNIT ELECTRICAL SCHEMATICS	40M33221
DOCUMENTS	
IP & C S-IU-503	6009048
TEST PROGRAM SPECIFICATIONS SATURN V LAUNCH COMPUTER COMPLEX AS-503	67-F11-0008
PRELAUNCH CHECKOUT SPECIFICATIONS AND CRITERIA FOR S-IU-503	68-257-0004
OPERATOR REFERENCE MANUAL FOR SLCC PROGRAMMING SYSTEM	68-F11-0003

3.0 GENERAL NOTES

FT45 WILL BE ENTERED FROM KEYBOARD IN ACCORDANCE WITH THE IBM OPERATOR REFERENCE MANUAL. ALL PROGRAM OPTIONS WILL BE EXERCISED AND HARDWARE RESPONSE TO COMPUTER STIMULI WILL BE MONITORED.

4.0 PREREQUISITES

NONE

REVISIONS			
SYM	DESCRIPTION	DATE	APPROVAL

DIGITAL COMMAND SYSTEM TEST PROGRAM (FT45)

5.0 PROCEDURE

5.1 VERIFY THAT THE INSTRUMENT UNIT IS POWERED DOWN.

5.2 VERIFY THAT THE LVDA (603A29) AND LVDC (603A28) STAGE INTERCONNECTING CABLES ARE INSTALLED ACCORDING TO IU CID (40M33080).

5.3 VERIFY THAT POWER SWITCH (S1) ON THE GCP (601-608A13) IS IN THE "OFF" POSITION.

5.4 NOTIFY POWER ROOM TO CLOSE THE IU CIRCUIT BREAKERS AND PLACE THE +6D100 AND +6D200 BACKUP BATTERIES ON LINE.

5.5 START THE +6D100 AND +6D200 POWER SUPPLIES.

5.6 PLACE THE +6D100 AND +6D200 OUTPUT POWER SWITCHES TO THE "ON" POSITION.

5.7 PLACE THE +6D100 AND +6D200 BACKUP BATTERY ENABLE SWITCHES TO THE "ON" POSITION AND VERIFY BACKUP BATTERY ENABLED INDICATIONS ON EVENTS DISPLAY PANEL.

5.8 POWER THE INSTRUMENT UNIT UNTIL THE "GROUND POWER" INDICATION IS RECEIVED.

5.9 VERIFY THAT GSCU IS ON.

5.10 ADJUST +6D100 AND +6D200 REMOTE VOLTAGE METERS TO READ (+2,-0) VIA THE VOLTAGE INCREASE/DECREASE SWITCHES.

5.11 VERIFY ESE/LVDA SWITCH IN ESE POSITION.

5.12 ISSUE A SWITCH SELECTOR REGISTER TEST FOR THE IU AND VERIFY THE REGISTER TEST INDICATION.

5.13 REQUEST MLF COMPUTER ENGINEERING TO VERIFY THAT COMPUTER PERIPHERAL EQUIPMENT IS READY TO SUPPORT.

5.14 REQUEST TEST CONDUCTOR TO VERIFY THAT LCC & MLF DDAS IS IN "RECEIVE".

5.15 REQUEST THAT S-IVB STAGE APPLY POWER UNTIL "READY FOR POWER TRANSFER" INDICATION IS RECEIVED.

5.16 REQUEST DDAS ENGINEERING TO POWER UP PCM/DDAS, PAM, F1 AND F2 TELEMETRY SYSTEMS IN THE INSTRUMENT UNIT.

5.17 VERIFY SWITCH (S26), COMMAND DECODER POWER, ON IU R.F. MEASURING AND TRACKING PANEL 601-611A1 IS IN THE "ON" POSITION. "COMMAND DECODER POWER" LAMP DS22 WILL ILLUMINATE. (MDI, LDO 753, ON).

REVISIONS			
SYM	DESCRIPTION	DATE	APPROVAL

5.0 PROCEDURE (Cont'd)

5.18 AT IU RF AND MEASURING PANEL, 601-611A1 VERIFY:

1. CCS TRANSPONDER SWITCH (S33) IS THE "ON" POSITION. (LDI 2982 AND MDO 1995 - ON). LAMP DS29, CCS TRANSPONDER ON, WILL ILLUMINATE.

2. CCS INHIBIT SWITCH (S34) IS IN THE AUTO POSITION AND CCS INHIBIT INDICATION LAMP (DS30) IS NOT ILLUMINATED.

5.19 VERIFY WITH ACS ENGINEERING THAT ACS SYSTEM IS READY TO SUPPORT DIGITAL COMMAND SYSTEMS TEST PROGRAM (FT45).

5.20 ISSUE IU SWITCH SELECTOR CH 82 TO ENABLE COMMAND SYSTEM.

5.21 ENTER FT04, POWER ON OPTION, IN ACCORDANCE WITH THE IBM OPERATING REFERENCE MANUAL.

5.22 AT SANDERS DISPLAY CONSOLE NO. 2 KEY # 7 ENTER DIGITAL COMMAND SYSTEMS TEST (FT45) IN ACCORDANCE WITH THE IBM OPERATOR REFERENCE MANUAL. EXECUTE AND VERIFY DIGITAL COMMAND SYSTEMS TEST PROGRAM FT45.

DURING EXECUTION OF FT45, AT GCP 601-608A13, MONITOR:

VERIFY AND PREPARE TO LOAD MODE CODE 56
MDI 738, 736, 735, 734 - ON

DISCRETE INPUT MONITOR ROUTINE MODE CODE 03
MDI 735 - ON

REVISIONS			
SYM	DESCRIPTION	DATE	APPROVAL

ATTACHMENT "A"

LVDA STATUS CODE CONVERSION CHART

LVDA	MODE	MDI	SOURCE STATEMENT
00	00	NONE	MODE SORT ROUTINE GROUND ENTRY
01	01	733	(PROGRAM CONTINUE ROUTINE)
02	02	734	ACCEIEROMETER PULSE COUNT ROUTINE ENTRY
03	21	734, 733	GIMBAL ANGLE MONITOR ROUTINE ENTRY
04	03	735	DISCRETE INPUT ROUTINE ENTRY
05	31	735, 733	DISCRETE OUTPUT ROUTINE ENTRY
06	32	735, 734	G &C STEERING TEST ENTRY
07	321	735, 734, 733	DOM TEST ROUTINE ENTRY
10	40	736	LADDER ERROR TEST ROUTINE ENTRY
11	41	736, 733	PREPARE TO LAUNCH WITHOUT A PLATFORM
12	42	736, 734	PREPARE TO LAUNCH WITH A PLATFORM
13	421	736, 734, 733	EXERCISE ATTITUDE COMMAND ROUTINE MODE 1 ENTRY
14	43	736, 735	COMPUTER INTERFACE UNIT READ ROUTINE ENTRY
15	431	736, 735, 733	SWITCH SELECTOR ROUTINE ENTRY
16	432	736, 735, 734	SECTOR SUM CHECK ROUTINE ENTRY
17	4321	736, 735, 734, 733	EXERCISE ATTITUDE COMMAND ROUTINE MODE 2 ENTRY
20	50	737	SECTOR DUMP ROUTINE ENTRY
21	51	737, 733	VERIFY AND PREPARE TO LOAD ROUTINE ENTRY
22	52	737, 734	MEMORY ERROR TEST
23	521	737, 734, 733	LOAD ROUTINE ENTRY

ATTACHMENT "A"

REVISIONS			
SYM	DESCRIPTION	DATE	APPROVAL

24	53	737, 735	MINOR LOOP, SWITCH SELECTOR AND REAL TIME COUNTER TESTS ENTRY
25	531	737, 735, 733	UNASSIGNED
30	540	737, 736	PREPARE TO LAUNCH SIM. FLT. WITH A PLATFORM
35	5431	737, 736, 735, 733	COMMAND RECEIVER LINKAGE ROUTINE
40	60	738	POWER UP AND INITIALIZE
52	642	738, 736, 734	UNASSIGNED
53	6421	738, 736, 734, 733	(MINOR LOOP, SWITCH SELECTOR, REAL TIME COUNTER TEST ROUTINE)
54	643	738, 736, 735	(LOAD ROUTINE)
55	6431	738, 736, 735, 733	(MEMORY ERROR TEST ROUTINE)
57	64321	738, 736, 735, 734, 733	(SECTOR DUMP ROUTINE)
60	650	738, 737	(EXERCISE ATTITUDE COMMAND ROUTINE MODE 2)
62	652	738, 737, 734	(SWITCH SELECTOR ROUTINE)
63	6521	738, 737, 734, 733	(COMPUTER INTERFACE UNIT READ ROUTINE)
64	653	738, 737, 735	(EXERCISE ATTITUDE COMMAND ROUTINE MODE 1)
65	6531	738, 737, 735, 733	(PREPARE TO LAUNCH ROUTINE)
67	65321	738, 737, 735, 734, 733	(LADDER ERROR TEST ROUTINE)
71	6541	738, 737, 736, 733	(G & C STEERING TEST ROUTINE)
72	6542	738, 737, 736, 734	(DISCRETE OUTPUT ROUTINE)
73	65421	738, 737, 736, 734, 733	(DISCRETE INPUT ROUTINE)
74	6543	738, 737, 736, 735	(GIMBAL ANGLE MONITOR ROUTINE)
75	65431	738, 737, 736, 735, 733	(ACCELEROMETER PULSE COUNT ROUTINE)
76	65432	738, 737, 736, 735, 734	(PROGRAM CONTINUE ROUTINE)
(26)	532	737, 735, 734	FORCED BEGIN AND INITIALIZE ROUTINE ENTRY
(27)	5321	737, 735, 734, 733	SYNC RESET SUBROUTINE OVERTIME MESSAGE

ATTACHMENT "A"

REVISIONS			
SYM	DESCRIPTION	DATE	APPROVAL

(34)	543	737, 736, 735	EXERCISE ATTITUDE COMMAND ROUTINE ERROR --- INITIAL CONVERTER NOT STILL SELECTED
36	5432	737, 736, 735, 734	PREPARE TO LAUNCH --- COMMAND TO COMPARE GIVEN AZIMUTH TO STORED AZIMUTH VALUE
(37)	54321	737, 736, 735, 734, 733	RESERVED FOR SIM. FLIGHT
(42)	62	738, 734	RESERVED FOR FLIGHT
(43)	621	738, 734, 733	EXERCISE ATTITUDE COMMAND TEST MAXIMUM ATTAINED ON ONE OR MORE AXES
(45)	631	738, 735, 733	READ INPUT DATA SUBROUTINE OVERTIME MESSAGE
(46)	632	738, 735, 734	EXERCISE ATTITUDE COMMAND TEST DRIVING TOWARD NULL
(47)	6321	738, 735, 734, 733	ERROR MONITOR SUBROUTINE ENTRY
(50)	640	738, 736	ABORT TEST STATUS CODE
(51)	641	738, 736, 733	FORCED BEGIN ROUTINE ERROR --- EMR NON-ZERO
(56)	6432	738, 736, 735, 734	VERIFY AND PREPARE TO LOAD ROUTINE TRYING TO LOAD WITHOUT FIRST LOADING PREVIOUS INFORMATION (IF ANY)
(66)	6532	738, 737, 735, 734	ISSUED ON COMPLETION OR REPEATABLE FLT. SIM. RUN
(70)	6540	738, 737, 736	RESERVED FOR SIM. FLIGHT
77	654321	738, 737, 736, 735, 734, 733	FORCES THE EMR SUBROUTINE TO RETURN TO FORCED BEGIN FBDA
31	541	737, 736, 733	UNASSIGNED
32	542	737, 736, 734	LVDC TM TEST
33	5421	737, 736, 734, 733	UNASSIGNED
41	61	738, 733	UNASSIGNED
44	63	738, 735	UNASSIGNED
61	651	738, 737, 733	UNASSIGNED

MSFC FORM 422 (VERTICAL) (AUGUST 1960)

NOTICE — When Government drawings, specifications, or other data are used for any purpose other than in connection with a definitely related Government procurement operation, the United States Government thereby incurs no responsibility nor obligation whatsoever; and the fact that the Government may have formulated, furnished, or in any way supplied the said drawings specifications or other data is not to be regarded by implication or otherwise as in any manner licensing the holder or any other person or corporation, or conveying any rights or permission to manufacture, use, or sell any patented invention that may in any way be related thereto.

APPLICATION		PART No.	M F	REVISIONS			
NEXT ASSY	USED ON			SYM	DESCRIPTION	DATE	APPROVAL

AS-503

PROGRAM VERIFICATION

PREFLIGHT COMMAND TEST (FT47)

73V1414

UNLESS OTHERWISE SPECIFIED DIMENSIONS ARE IN INCHES TOLERANCES ON: FRACTIONS DECIMALS ANGLES	ORIGINAL DATE OF DRAWING 7/19/68	PREFLIGHT COMMAND TEST (FT47)	GEORGE C. MARSHALL SPACE FLIGHT CENTER NATIONAL AERONAUTICS AND SPACE ADMINISTRATION HUNTSVILLE, ALABAMA
MATERIAL	DRAFTSMAN / CHECKER TRACER / CHECKER ENGINEER / ENGINEER		
HEAT TREATMENT	SUBMITTED E. N. Bryan E. N. Bryan		
FINAL PROTECTIVE FINISH	APPROVED K. A. Drakey K. A. Drakey	SCALE UNIT WT	DWG SIZE A 73V1414 SHEET 1 OF 7

REVISIONS			
SYM	DESCRIPTION	DATE	APPROVAL

PREFLIGHT COMMAND TEST PROGRAM (FT47)

1.0 SCOPE

THIS PROCEDURE WILL VERIFY THE GUIDANCE SYSTEM TEST PROGRAM "PREFLIGHT COMMAND TEST (FT47)."

2.0 APPLICABLE GOVERNMENT FURNISHED DOCUMENTS

DRAWINGS	
AESS LVDA INTERFACE	50M36401
AESS INSTRUMENT UNIT ESE SATURN V	40M14490
INSTRUMENT UNIT ELECTRICAL SCHEMATICS	40M33221
DOCUMENTS	
IP & C S-IU-503	6009048
TEST PROGRAM SPECIFICATIONS SATURN V LAUNCH COMPUTER COMPLEX AS-503	67-F11-0008
PRELAUNCH CHECKOUT SPECIFICATIONS AND CRITERIA FOR S-IU-503	68-257-0004
OPERATOR REFERENCE MANUAL FOR SLCC PROGRAMMING SYSTEM	68-F11-0003

3.0 GENERAL NOTES

FT47 WILL BE ENTERED FROM KEYBOARD IN ACCORDANCE WITH THE IBM OPERATOR REFERENCE MANUAL. ALL PROGRAM OPTIONS WILL BE EXERCISED AND HARDWARE RESPONSE TO COMPUTER STIMULI WILL BE MONITORED.

4.0 PREREQUISITES

REQUEST ACS ENGINEERING TO ENABLE THE AIRBORNE COMMAND SYSTEM SIMULATOR APPROXIMATELY 0.5 HOURS BEFORE EXECUTION OF FT47.

COMMANDS MUST BE LOADED INTO MEMORY VIA FU01 PRIOR TO EXECUTION OF FT47.

REVISIONS			
SYM	DESCRIPTION	DATE	APPROVAL

PREFLIGHT COMMAND TEST PROGRAM (FT47)

5.0 PROCEDURE

5.1 VERIFY THAT THE INSTRUMENT UNIT IS POWERED DOWN.

5.2 VERIFY THAT LVDA (603A29) AND LVDC (603A28) STAGE INTERCONNECTING CABLES ARE INSTALLED ACCORDING TO IU CID (40M33080).

5.3 VERIFY THAT POWER SWITCH (S1) ON THE GCP (601-608A13) IS IN THE "OFF" POSITION.

5.4 NOTIFY POWER ROOM TO CLOSE THE IU CIRCUIT BREAKERS AND PLACE THE +6D100 AND +6D200 BACKUP BATTERIES ON LINE.

5.5 START THE +6D100 AND +6D200 OUTPUT POWER SWITCHES TO THE "ON" POSITION.

5.7 PLACE THE +6D100 AND +6D200 BACKUP BATTERY ENABLE SWITCHES TO THE "ON" POSITION AND VERIFY BACKUP BATTERY ENABLED INDICATIONS ON EVENTS DISPLAY PANEL.

5.8 POWER THE INSTRUMENT UNTIL UNTIL THE "GROUND POWER" INDICATION IS RECEIVED.

5.9 VERIFY THAT GSCU IS ON.

5.10 ADJUST +6D100 AND +6D200 REMOTE VOLTAGE METERS TO READ 28V(+2,-0) VIA THE VOLTAGE INCREASE/DECREASE SWITCHES.

5.11 VERIFY ESE/LVDA SWITCH IN ESE POSITION.

5.12 ISSUE A SWITCH SELECTOR REGISTER TEST FOR THE IU AND VERIFY THE REGISTER TEST INDICATION.

5.13 REQUEST MLF COMPUTER ENGINEERING TO VERIFY THAT COMPUTER PERIPHERAL EQUIPMENT IS READY TO SUPPORT.

5.14 REQUEST TEST CONDUCTOR TO VERIFY THAT LCC & MLF DDAS IS IN "RECEIVE".

5.15 REQUEST THAT S-IVB STAGE APPLY POWER UNTIL "READY FOR POWER TRANSFER" INDICATION IS RECEIVED.

5.16 PLACE "POWER ON" SWITCH (S1) AT GCP 601-608A13 TO AUTO POSITION.

5.17 ENTER FT04, POWER ON OPTION, IN ACCORDANCE WITH THE IBM OPERATOR REFERENCE MANUAL.

REVISIONS			
SYM	DESCRIPTION	DATE	APPROVAL

PREFLIGHT COMMAND TEST PROGRAM (FT47)

5.0 PROCEDURE (Cont'd)

5.18 ISSUE IN SWITCH SELECTOR CH82 TO ENABLE COMMAND SYSTEM.

5.19 VERIFY THE FOLLOWING SWITCHES ON THE IU MEASURING AND TRACKING PANEL (601-611A1):

a. COMMAND DECODER POWER (S26) - ON

b. CCS TRANSPONDER (S35) - ON

5.20 VERIFY AIRBORNE COMMAND SYSTEM SIMULATOR IS ENABLED.

5.21 AT SANDERS DISPLAY CONSOLE NO. 2 KEY 7 ENTER PREFLIGHT COMMAND TEST (FT47) IN ACCORDANCE THE IBM OPERATOR REFERENCE MANUAL. EXECUTE AND VERIFY PREFLIGHT COMMAND TEST PROGRAM.

REVISIONS			
SYM	DESCRIPTION	DATE	APPROVAL

ATTACHMENT "A"

LVDA STATUS CODE CONVERSION CHART

LVDA	MODE	MDI	SOURCE STATEMENT
00	00	NONE	MODE SORT ROUTINE GROUND ENTRY
01	01	733	(PROGRAM CONTINUE ROUTINE)
02	02	734	ACCELEROMETER PULSE COUNT ROUTINE ENTRY
03	21	734, 733	GIMBAL ANGLE MONITOR ROUTINE ENTRY
04	03	735	DISCRETE INPUT ROUTINE ENTRY
05	31	735, 733	DISCRETE OUTPUT ROUTINE ENTRY
06	32	735, 734	G & C STEERING TEST ENTRY
07	321	735, 734, 733	DOM TEST ROUTINE ENTRY
10	40	736	LADDER ERROR TEST ROUTINE ENTRY
11	41	736, 733	PREPARE TO LAUNCH WITHOUT A PLATFORM
12	42	736, 734	PREPARE TO LAUNCH WITH A PLATFORM
13	421	736, 734, 733	EXERCISE ATTITUDE COMMAND ROUTINE MODE 1 ENTRY
14	43	736, 735	COMPUTER INTERFACE UNIT READ ROUTINE ENTRY
15	431	736, 735, 733	SWITCH SELECTOR ROUTINE ENTRY
16	432	736, 735, 734	SECTOR SUM CHECK ROUTINE ENTRY
17	4321	736, 735, 734, 733	EXERCISE ATTITUDE COMMAND ROUTINE MODE 2 ENTRY
20	50	737	SECTOR DUMP ROUTINE ENTRY
21	51	737, 733	VERIFY AND PREPARE TO LOAD ROUTINE ENTRY
22	52	737, 734	MEMORY ERROR TEST
23	521	737, 734, 733	LOAD ROUTINE ENTRY

REVISIONS			
SYM	DESCRIPTION	DATE	APPROVAL

ATTACHMENT "A"

24	53	737, 735	MINOR LOOP, SWITCH SELECTOR AND REAL TIME COUNTER TESTS ENTRY
25	531	737, 735, 733	UNASSIGNED
30	540	737, 736	PREPARE TO LAUNCH SIM. FLT. WITH A PLATFORM
35	5431	737, 736, 735, 733	COMMAND RECEIVER LINKAGE ROUTINE
40	60	738	POWER UP AND INITIALIZE
52	642	738, 736, 734	UNASSIGNED
53	6421	738, 736, 734, 733	(MINOR LOOP, SWITCH SELECTOR, REAL TIME COUNTER TEST ROUTINE)
54	643	738, 736, 735	(LOAD ROUTINE)
55	6431	738, 736, 735, 733	(MEMORY ERROR TEST ROUTINE)
57	64321	738, 736, 735, 734, 733	(SECTOR DUMP ROUTINE)
60	650	738, 737	(EXERCISE ATTITUDE COMMAND ROUTINE MODE 2)
62	652	738, 737, 734	(SWITCH SELECTOR ROUTINE)
63	6521	738, 737, 734, 733	(COMPUTER INTERFACE UNIT READ ROUTINE)
64	653	738, 737, 735	(EXERCISE ATTITUDE COMMAND ROUTINE MODE 1)
65	6531	738, 737, 735, 733	(PREPARE TO LAUNCH ROUTINE)
67	65321	738, 737, 735, 734, 733	(LADDER ERROR TEST ROUTINE)
71	6541	738, 737, 736, 733	(G & C STEERING TEST ROUTINE)
72	6542	738, 737, 736, 734	(DISCRETE OUTPUT ROUTINE)
73	65421	738, 737, 736, 734, 733	(DISCRETE INPUT ROUTINE)
74	6543	738, 737, 736, 735	(GIMBAL ANGLE MONITOR ROUTINE)
75	65431	738, 737, 736, 735, 733	(ACCELEROMETER PULSE COUNT ROUTINE)
76	65432	738, 737, 736, 735, 734	(PROGRAM CONTINUE ROUTINE)
(26)	532	737, 735, 734	FORCED BEGIN AND INITIALIZE ROUTINE ENTRY
(27)	5321	737, 735, 734, 733	SYNC RESET SUBROUTINE OVERTIME MESSAGE

ATTACHMENT "A"

REVISIONS			
SYM	DESCRIPTION	DATE	APPROVAL

(34)	543	737, 736, 735	EXERCISE ATTITUDE COMMAND ROUTINE ERROR ---INITIAL CONVERTER NOT STILL SELECTED
36	5432	737, 736, 735, 734	PREPARE TO LAUNCH---COMMAND TO COMPARE GIVEN AZIMUTH TO STORE AZIMUTH VALUE
(37)	54321	737, 736, 735, 734, 733	RESERVED FOR SIM. FLIGHT
(42)	62	738, 734	RESERVED FOR FLIGHT
(43)	621	738, 734, 733	EXERCISE ATTITUDE COMMAND TEST MAXIMUM ATTAINED ON ONE OR MORE AXES
(45)	631	738, 735, 733	READ INPUT DATA SUBROUTINE OVERTIME MESSAGE
(46)	632	738, 735, 734	EXERCISE ATTITUDE COMMAND TEST DRIVING TOWARD NULL
(47)	6321	738, 735, 734, 733	ERROR MONITOR SUBROUTINE ENTRY
(50)	640	738, 736	ABORT TEST STATUS CODE
(51)	641	738, 736, 733	FORCED BEGIN ROUTINE ERROR---EMR NON-ZERO
(56)	6432	738, 736, 735, 734	VERIFY AND PREPARE TO LOAD ROUTINE TRYING TO LOAD WITHOUT FIRST LOADING PREVIOUS INFORMATION (IF ANY)
(66)	6532	738, 737, 735, 734	ISSUED ON COMPLETION OR REPEATABLE FLT. SIM. RUN
(70)	6540	738, 737, 736	RESERVE FOR SIM. FLIGHT
77	654321	738, 737, 736, 735, 734, 733	FORCES THE EMR SUBROUTINE RETURN TO FORCED BEGIN FBDA
31	541	737, 736, 733	UNASSIGNED
32	542	737, 736, 734	LVDC TM TEST
33	5421	737, 736, 734, 733	UNASSIGNED
41	61	738, 733	UNASSIGNED
44	63	738, 735	UNASSIGNED
61	651	738, 737, 733	UNASSIGNED

MSFC FORM 422 (VERTICAL) (AUGUST 1960)

NOTICE — When Government drawings, specifications, or other data are used for any purpose other than in connection with a definitely related Government procurement operation, the United States Government thereby incurs no responsibility nor obligation whatsoever; and the fact that the Government may have formulated, furnished, or in any way supplied the said drawings specifications or other data is not to be regarded by implication or otherwise as in any manner licensing the holder or any other person or corporation, or conveying any rights or permission to manufacture, use, or sell any patented invention that may in any way be related thereto.

APPLICATION		PART No.	M F	REVISIONS			
NEXT ASSY	USED ON			SYM	DESCRIPTION	DATE	APPROVAL

AS-503

PROGRAM VERIFICATION

LADDER OUTPUT TEST (FT10)

73V1415

UNLESS OTHERWISE SPECIFIED DIMENSIONS ARE IN INCHES TOLERANCES ON: FRACTIONS DECIMALS ANGLES	ORIGINAL DATE OF DRAWING 7/19/68 DRAFTSMAN / CHECKER TRACER / CHECKER ENGINEER / ENGINEER	LADDER OUTPUT TEST (FT10) AS-503	GEORGE C. MARSHALL SPACE FLIGHT CENTER NATIONAL AERONAUTICS AND SPACE ADMINISTRATION HUNTSVILLE, ALABAMA
MATERIAL	SUBMITTED E. N. Bryan E. N. BRYAN		
HEAT TREATMENT			
FINAL PROTECTIVE FINISH	APPROVED R. A. Drakey R. A. DRAKEY	SCALE UNIT WT	DWG SIZE A 73V1415 SHEET 1 OF 7

REVISIONS			
SYM	DESCRIPTION	DATE	APPROVAL

LVDC/LVDA LADDER OUTPUT TEST PROGRAM (FT10)

1.0 SCOPE

THIS PROCEDURE WILL VERIFY THE GUIDANCE SYSTEM TEST PROGRAM, "LVDC/LVDA LADDER OUTPUT TEST, FT10".

2.0 APPLICABLE GOVERNMENT FURNISHED DOCUMENTS

DRAWINGS	
AESS LVDA INTERFACE	50M36401
AESS INSTRUMENT UNIT ESE SATURN V	40M14490
INSTRUMENT UNIT ELECTRICAL SCHEMATICS	40M33221
DOCUMENTS	
IP & C S-IU-503	6009048
TEST PROGRAM SPECIFICATIONS SATURN V LAUNCH COMPUTER COMPLEX AS-503	67-F11-0008
PRELAUNCH CHECKOUT SPECIFICATIONS AND CRITERIA FOR S-IU-503	68-257-0004
OPERATOR REFERENCE MANUAL FOR SLCC PROGRAMMING SYSTEM	68-F11-0003

3.0 GENERAL NOTES

FT10 WILL BE ENTERED FROM KEYBOARD IN ACCORDANCE WITH THE IBM OPERATOR REFERENCE MANUAL. ALL PROGRAM OPTIONS WILL BE EXERCISED AND HARDWARE RESPONSE TO COMPUTER STIMULI WILL BE MONITORED.

4.0 PREREQUISITES

NONE

REVISIONS			
SYM	DESCRIPTION	DATE	APPROVAL

LVDA/LVDC LADDER OUTPUT TEST PROGRAM (FT10)

5.0 PROCEDURE

5.1 VERIFY THAT THE INSTRUMENT UNIT IS POWERED DOWN.

5.2 VERIFY THAT LVDA (603A29) AND LVDC (603A28) STAGE INTERCONNECTING CABLES ARE INSTALLED ACCORDING TO IU CID (40M33080).

5.3 VERIFY THAT POWER SWITCH (S1) ON THE GCP (601-608A13) IS IN THE "OFF" POSITION.

5.4 NOTIFY POWER ROOM TO CLOSE THE IU CIRCUIT BREAKERS AND PLACE THE +6D100 AND +6D200 BACKUP BATTERIES ON LINE.

5.5 START THE +6D100 AND +6D200 POWER SUPPLIES.

5.6 PLACE THE +6D100 AND +6D200 POWER SWITCHES TO THE "ON" POSITION.

5.7 PLACE THE +6D100 AND +6D200 BACKUP BATTERY ENABLE SWITCHES TO THE "ON" POSITION AND VERIFY BACKUP BATTERY ENABLED INDICATIONS ON EVENTS DISPLAY PANEL.

5.8 POWER THE INSTRUMENT UNIT UNTIL THE "GROUND POWER" INDICATION IS RECEIVED.

5.9 VERIFY THAT GSCU IS ON.

5.10 ADJUST +6D100 AND +6D200 REMOTE VOLTAGE METERS TO READ 28V (+2,-0) VIA THE VOLTAGE INCREASE/DECREASE SWITCHES.

5.11 VERIFY ESE/LVDA SWITCH IN ESE POSITION.

5.12 ISSUE A SWITCH SELECTOR REGISTER TEST FOR THE IU AND VERIFY THE REGISTER TEST INDICATION.

5.13 REQUEST MLF COMPUTER ENGINEERING TO VERIFY THAT COMPUTER PERIPHERAL EQUIPMENT IS READY TO SUPPORT.

5.14 REQUEST TEST CONDUCTOR TO VERIFY THAT LCC & MLF DDAS IS IN "RECEIVE".

5.15 REQUEST THAT S-IVB STAGE APPLY POWER UNTIL "READY FOR POWER TRANSFER" INDICATION IS RECEIVED.

REVISIONS			
SYM	DESCRIPTION	DATE	APPROVAL

5.0 PROCEDURES (Cont'd)

5.16 PLACE "POWER ON" SWITCH (S1) AT GCP 601-608A13 TO AUTO POSITION.

5.17 ENTER FT04, POWER ON OPTION, IN ACCORDANCE WITH THE IBM OPERATOR REFERENCE MANUAL.

5.18 VERIFY FLIGHT CONTROL "SYSTEM POWER" SWITCH (S3) IS IN THE "OFF" POSITION ON FLIGHT CONTROL COMPUTER PANEL 601-607A7.

5.19 REQUEST TEST CONDUCTOR TO VERIFY THAT ALL S-IC, S-II AND S-IVB HYDRAULICS ARE OFF.

5.20 AT SANDERS DISPLAY CONSOLE NO. 2 KEY #7 ENTER LVDC/LVDA LADDER OUTPUT TEST PROGRAM (FT10) IN ACCORDANCE WITH THE IBM OPERATOR REFERENCE MANUAL. EXECUTE AND VERIFY LVDC OUTPUT TEST.

DURING EXECUTION OF FT10, AT GCP601-608A13, MONITOR:

LADDER ERROR ROUTINE MODE CODE 40
MDI 736 -ON

5.21 REPEAT STEP 5.20 WITH STAGE HYDRAULICS AND FLIGHT CONTROL COMPUTER POWER ON.

REVISIONS			
SYM	DESCRIPTION	DATE	APPROVAL

ATTACHMENT "A"

LVDA STATUS CODE CONVERSION CHART

LVDA	MODE	MDI	SOURCE STATEMENT
00	00	NONE	MODE SORT ROUTINE GROUND ENTRY
01	01	733	(PROGRAM CONTINUE ROUTINE)
02	02	734	ACCELEROMETER PULSE COUNT ROUTINE ENTRY
03	21	734, 733	GIMBAL ANGLE MONITOR ROUTINE ENTRY
04	03	735	DISCRETE INPUT ROUTINE ENTRY
05	31	735, 733	DISCRETE OUTPUT ROUTINE ENTRY
06	32	735, 734	G & C STEERING TEST ENTRY
07	321	735, 734, 733	DOM TEST ROUTINE ENTRY
10	40	736	LADDER ERROR TEST ROUTINE ENTRY
11	41	736, 733	PREPARE TO LAUNCH WITHOUT A PLATFORM
12	42	736, 734	PREPARE TO LAUNCH WITH A PLATFORM
13	421	736, 734, 733	EXERCISE ATTITUDE COMMAND ROUTINE MODE 1 ENTRY
14	43	736, 735	COMPUTER INTERFACE UNIT READ ROUTINE ENTRY
15	431	736, 735, 733	SWITCH SELECTOR ROUTINE ENTRY
16	432	736, 735, 734	SECTOR SUM CHECK ROUTINE ENTRY
17	4321	736, 735, 734, 733	EXERCISE ATTITUDE COMMAND ROUTINE MODE 2 ENTRY
20	50	737,	SECTOR DUMP ROUTINE ENTRY
21	51	737, 733	VERIFY AND PREPARE TO LOAD ROUTINE ENTRY
22	52	737, 734	MEMORY ERROR TEST
23	521	737, 734, 733	LOAD ROUTINE ENTRY

ATTACHMENT "A"

REVISIONS			
SYM	DESCRIPTION	DATE	APPROVAL

24	53	737, 735	MINOR LOOP, SWITCH SEIECTOR AND REAL TIME COUNTER TESTS ENTRY
25	531	737, 735, 733	UNASSIGNED
30	540	737, 736	PREPARE TO LAUNCH SIM. FLT. WITH A PLATFORM
35	5431	737, 736, 735, 733	COMMAND RECEIVER LINKAGE ROUTINE
40	60	738	POWER UP AND INITIALIZE
52	642	738, 736, 734	UNASSIGNED
53	6421	738, 736, 734, 733	(MINOR LOOP, SWITCH SELECTOR, REAL TIME COUNTER TEST ROUTINE)
54	643	738, 736, 735	(LOAD ROUTINE)
55	6431	738, 736, 735, 733	(MEMORY ERROR TEST ROUTINE)
57	64321	738, 736, 735, 734, 733	(SECTOR DUMP ROUTINE)
60	650	738, 737	(EXERCISE ATTITUDE COMMAND ROUTINE MODE 2)
62	652	738, 737, 734	(SWITCH SELECTOR ROUTINE)
63	6521	738, 737, 734, 733	(COMPUTER INTERFACE UNIT READ ROUTINE)
64	653	738, 737, 735	(EXERCISE ATTITUDE COMMAND ROUTINE MODE 1)
65	6531	738, 737, 735, 733	(PREPARE TO LAUNCH ROUTINE)
67	65321	738, 737, 735, 734, 733	(LADDER ERROR TEST ROUTINE)
71	6541	738, 737, 736, 733	(G & C STEERING TEST ROUTINE)
72	6542	738, 737, 736, 734	(DISCRETE OUTPUT ROUTINE)
73	65421	738, 737, 736, 734, 733	(DISCRETE INPUT ROUTINE)
74	6543	738, 737, 736, 735	(GIMBAL ANGLE MONITOR ROUTINE)
75	65431	738, 737, 736, 735, 733	(ACCELEROMETER PULSE COUNT ROUTINE)
76	65432	738, 737, 736, 735, 734	(PROGRAM CONTINUE ROUTINE)
(26)	532	737, 735, 734	FORCED BEGIN AND INITIALIZE ROUTINE ENTRY
(27)	5321	737, 735, 734, 733	SYNC RESET SUBROUTINE OVERTIME MESSAGE

REVISIONS			
SYM	DESCRIPTION	DATE	APPROVAL

ATTACHMENT "A"

(34)	543	737, 736, 735	EXERCISE ATTITUDE COMMAND ROUTINE ERROR --- INITIAL CONVERTER NOT STILL SELECTED
36	5432	737, 736, 735, 734	PREPARE TO LAUNCH --- COMMAND TO COMPARE GIVEN AZIMUTH TO STORE AZIMUTH VALUE
(37)	54321	737, 736, 735, 734, 733	RESERVED FOR SIM. FLIGHT
(42)	62	738, 734	RESERVED FOR FLIGHT
(43)	621	738, 734, 733	EXERCISE ATTITUDE COMMAND TEST MAXIMUM ATTAINED ON ONE OR MORE AXES
(45)	631	738, 735, 733	READ INPUT DATA SUBROUTINE OVERTIME MESSAGE
(46)	632	738, 735, 734	EXERCISE ATTITUDE COMMAND TEST DRIVING TOWARD NULL
(47)	6321	738, 735, 734, 733	ERROR MONITOR SUBROUTINE ENTRY
(50)	640	738, 736	ABORT TEST STATUS CODE
(51)	641	738, 736, 733	FORCED BEGIN ROUTINE ERROR --- EMR NON-ZERO
(56)	6432	738, 736, 735, 734	VERIFY AND PREPARE TO LOAD ROUTINE TRYING TO LOAD WITHOUT FIRST LOADING PREVIOUS INFORMATION (IF ANY)
(66)	6532	738, 737, 735, 734	ISSUED ON COMPLETION OR REPEATABIE FIT. SIM. RUN
(70)	6540	738, 737, 736	RESERVE FOR SIM. FLIGHT
77	654321	738, 737, 736, 735 734, 733	FORCES THE EMR SUBROUTINE TO RETURN TO FORCED BEGIN FBDA
31	541	737, 736, 733	UNASSIGNED
32	542	737, 736, 734	LVDC TM TEST
33	5421	737, 736, 734, 733	UNASSIGNED
41	61	738, 733	UNASSIGNED
44	63	738, 735	UNASSIGNED
61	651	738, 737, 733	UNASSIGNED

MSFC FORM 422 (VERTICAL) (AUGUST 1960)

NOTICE — When Government drawings, specifications, or other data are used for any purpose other than in connection with a definitely related Government procurement operation, the United States Government thereby incurs no responsibility nor obligation whatsoever; and the fact that the Government may have formulated, furnished, or in any way supplied the said drawings specifications or other data is not to be regarded by implication or otherwise as in any manner licensing the holder or any other person or corporation, or conveying any rights or permission to manufacture, use, or sell any patented invention that may in any way be related thereto.

APPLICATION		PART No.	MF	REVISIONS			
NEXT ASSY	USED ON			SYM	DESCRIPTION	DATE	APPROVAL

AS-503

PROGRAM VERIFICATION

GIMBAL ANGLE READ (FT06)

73V1416

UNLESS OTHERWISE SPECIFIED DIMENSIONS ARE IN INCHES TOLERANCES ON: FRACTIONS DECIMALS ANGLES	ORIGINAL DATE OF DRAWING 7/23/68 DRAFTSMAN / CHECKER TRACER / CHECKER ENGINEER / ENGINEER	GIMBAL ANGLE READ AND PLATFORM DRIFT (FT06) AS-503	GEORGE C. MARSHALL SPACE FLIGHT CENTER NATIONAL AERONAUTICS AND SPACE ADMINISTRATION HUNTSVILLE, ALABAMA	
MATERIAL	SUBMITTED Don J. Ward for E. N. BRYAN			
HEAT TREATMENT				
FINAL PROTECTIVE FINISH	APPROVED R. A. Drakey R. A. DRAKEY	SCALE UNIT WT	DWG SIZE A	73V1416 SHEET 1 OF 7

REVISIONS			
SYM	DESCRIPTION	DATE	APPROVAL

GIMBAL ANGLE READ AND PLATFORM DRIFT TEST PROGRAM (FT06)

1.0 SCOPE

THIS PROCEDURE WILL VERIFY THE GUIDANCE SYSTEM TEST PROGRAM "GIMBAL ANGLE READ TEST (FT06)".

2.0 APPLICABLE GOVERNMENT FURNISHED DOCUMENTS

DRAWINGS AESS LVDA INTERFACE	50M36401
AESS INSTRUMENT UNIT ESE SATURN V	40M14490
INSTRUMENT UNIT ELECTRICAL SCHEMATICS	40M33221
DOCUMENTS IP & C S-IU-503	6009048
TEST PROGRAM SPECIFICATIONS SATURN V LAUNCH COMPUTER : COMPLEX AS-503	67-F11-0008
PRELAUNCH CHECKOUT SPECIFICATIONS AND CRITERIA FOR S-IU-503	68-257-0004
OPERATOR REFERENCE MANUAL FOR SLCC PROGRAMMING SYSTEM	68-F11-0003

3.0 GENERAL NOTES

FT06 WILL BE ENTERED FROM KEYBOARD IN ACCORDANCE WITH THE IBM OPERATOR MANUAL. ALL PROGRAM OPTIONS WILL BE EXERCISED AND HARDWARE RESPONSE TO COMPUTER STIMULI WILL BE MONITORED.

4.0 PREREQUISITES

NONE

REVISIONS			
SYM	DESCRIPTION	DATE	APPROVAL

GIMBAL ANGLE READ AND PLATFORM DRIFT TEST PROGRAM (FT06)

5.0 PROCEDURE

5.1 VERIFY THAT THE INSTRUMENT UNIT IS POWERED DOWN.

5.2 VERIFY THAT LVDA (603A29) AND LVDC (603A28) STAGE INTERCONNECTING CABLES ARE INSTALLED ACCORDING TO IU CID (40M33080).

5.3 VERIFY THAT POWER SWITCH (S1) ON THE GCP (601-608A13) IS IN THE "OFF" POSITION.

5.4 NOTIFY POWER ROOM TO CLOSE THE IU CIRCUIT BREAKERS AND PLACE THE +6D100 AND +6D200 BACKUP BATTERIES ON LINE.

5.5 START THE +6D200 POWER SUPPLIES.

5.6 PLACE THE +6D100 AND +6D200 OUTPUT POWER SWITCHES TO THE "ON" POSITION.

5.7 PLACE THE +6D100 AND +6D200 BACKUP BATTERY ENABLE SWITCHES TO THE "ON" POSITION AND VERIFY BACKUP BATTERY ENABLED INDICATIONS ON EVENTS DISPLAY PANEL.

5.8 POWER THE INSTRUMENT UNIT UNTIL THE "GROUND POWER" INDICATION IS RECEIVED.

5.9 VERIFY THAT GSCU IS ON.

5.10 ADJUST +6D100 AND +6D200 REMOTE VOLTAGE METERS TO READ 28V(+2,-0) VIA THE VOLTAGE INCREASE/DECREASE SWITCHES.

5.11 VERIFY ESE/LVDA SWITCH IN ESE POSITION.

5.12 ISSUE A SWITCH SELECTOR REGISTER TEST FOR THE IU AND VERIFY THE REGISTER TEST INDICATION.

5.13 REQUEST MLF COMPUTER ENGINEERING TO VERIFY THAT COMPUTER PERIPHERAL EQUIPMENT IS READY TO SUPPORT.

5.14 REQUEST TEST CONDUCTOR TO VERIFY THAT LCC & MLF DDAS IS IN "RECEIVE".

5.15 REQUEST THAT S-IVB STAGE APPLY POWER UNTIL "READY FOR POWER TRANSFER" INDICATION IS RECEIVED.

5.16 APPLY POWER TO THE ST-124M PLATFORM.

5.17 PLACE "POWER ON" SWITCH (S1) AT GCP 601-608A13 TO AUTO POSITION.

5.18 ENTER FT04, LVDC POWER ON OPTION, IN ACCORDANCE WITH THE IBM OPERATOR REFERENCE MANUAL.

REVISIONS			
SYM	DESCRIPTION	DATE	APPROVAL

5.19 AT SANDERS DISPLAY CONSOLE # 2 CARD KEY #7 ENTER THE GIMBAL ANGLE READ AND PLATFORM DRIFT TEST PROGRAM (FT06) IN ACCORDANCE WITH THE IBM OPERATORS REFERENCE MANUAL.

5.20 POSITION THE ST124M AXES USING ANGLES PROGRAMMED INTO THE CMR COMPUTER SIMULATOR.

5.21 EXECUTE OPTION A OF FT06 AND VERIFY THAT THE ANGLE READ BY THE PROGRAM IS THE SAME AS THAT PROGRAMMED INTO THE CMR COMPUTER SIMULATOR.

5.22 PERFORM THE GYRO DRIFT TEST BY ENTERING THE APPROPRIATE OPTION ($PBXXXXXXX).

5.23 SET THE PLATFORM INERTIAL BY TURNING OFF THE PLATFORM ALIGNMENT SYSTEM.

5.24 VERIFY THAT THE DRIFT FIGURES GIVEN BY THE PROGRAM (FT06) OCCUR ON THE PROPER AXES AND THAT THE VALUES ARE WITHIN SPECIFICATIONS.

REVISIONS			
SYM	DESCRIPTION	DATE	APPROVAL

ATTACHMENT "A"

LVDA STATUS CODE CONVERSION CHART

LVDA	MODE	MDI	SOURCE STATEMENT
00	00	NONE	MODE SORT ROUTINE GROUND ENTRY
01	01	733	(PROGRAM CONTINUE ROUTINE)
02	02	734	ACCELEROMETER PULSE COUNT ROUTINE ENTRY
03	21	734, 733	GIMBAL ANGLE MONITOR ROUTINE ENTRY
04	03	735	DISCRETE INPUT ROUTINE ENTRY
05	31	735, 733	DISCRETE OUTPUT ROUTINE ENTRY
06	32	735, 734	G & C STEERING TEST ENTRY
07	321	735, 734, 733	DOM TEST ROUTINE ENTRY
10	40	736	LADDER ERROR TEST ROUTINE ENTRY
11	41	736, 733	PREPARE TO LAUNCH WITHOUT A PLATFORM
12	42	736, 734	PREPARE TO LAUNCH WITH A PLATFORM
13	421	736, 734, 733	EXERCISE ATTITUDE COMMAND ROUTINE MODE 1 ENTRY
14	43	736, 735	COMPUTER INTERFACE UNIT READ ROUTINE ENTRY
15	431	736, 735, 733	SWITCH SELECTOR ROUTINE ENTRY
16	432	736, 735, 734	SECTOR SUM CHECK ROUTINE ENTRY
17	4321	736, 735, 734, 733	EXERCISE ATTITUDE COMMAND ROUTINE MODE 2 ENTRY
20	50	737	SECTOR DUMP ROUTINE ENTRY
21	51	737, 733	VERIFY AND PREPARE TO LOAD ROUTINE ENTRY
22	52	737, 734	MEMORY ERROR TEST
23	521	737, 734, 733	LOAD ROUTINE ENTRY

ATTACHMENT "A"

REVISIONS			
SYM	DESCRIPTION	DATE	APPROVAL

24	53	737, 735	MINOR LOOP, SWITCH SELECTOR AND REAL TIME COUNTER TEST ENTRY
25	531	737, 735, 733	UNASSIGNED
30	540	737, 736	PREPARE TO LAUNCH SIM. FLT. WITH A PLATFORM
35	5431	737, 736, 735, 733	COMMAND RECEIVER LINKAGE ROUTINE
40	60	738	POWER UP AND INTIALIZE
52	642	738, 736, 734	UNASSIGNED
53	6421	738, 736, 734, 733	(MINOR LOOP, SWITCH SELECTOR, REAL TIME COUNTER TEST ROUTINE)
54	643	738, 736, 735	(LOAD ROUTINE)
55	6431	738, 736, 735, 733	(MEMORY ERROR TEST ROUTINE)
57	64321	738, 736, 735, 734, 733	(SECTOR DUMP ROUTINE)
60	650	738, 737	(EXERCISE ATTITUDE COMMAND ROUTINE MODE 20
62	652	738, 737, 734	(SWITCH SELECTOR ROUTINE)
63	6521	738, 737, 734, 733	(COMPUTER INTERFACE UNIT READ ROUTINE)
64	653	738, 737, 735	(EXERCISE ATTITUDE COMMAND ROUTINE MODE 1)
65	6531	738, 737, 735, 733	(PREPARE TO LAUNCH ROUTINE)
67	65321	738, 737, 735, 734, 733	(LADDER ERROR TEST ROUTINE)
71	6541	738, 737, 736, 733	(G & C STEERING TEST ROUTINE)
72	6542	738, 737, 736, 734	(DISCRETE OUTPUT ROUTINE)
73	65421	738, 737, 736, 734, 733	(DISCRETE INPUT ROUTINE)
74	6543	738, 737, 736, 735	(GIMBAL ANGLE MONITOR ROUTINE)
75	65431	738, 737, 736, 735, 733	(ACCELEROMETER PULSE COUNT ROUTINE)
76	65432	738, 737, 736, 735, 734	(PROGRAM CONTINUE ROUTINE)
(26)	532	737, 735, 734	FORCED BEGIN AND INITIALIZE ROUTINE ENTRY
(27)	5321	737, 735, 734, 733	SYNC RESET SUBROUTINE OVERTIME MESSAGE

REVISIONS			
SYM	DESCRIPTION	DATE	APPROVAL

ATTACHMENT "A"

(34)	543	737, 736, 735	EXERCISE ATTITUDE COMMAND ROUTINE ERROR --- INITIAL CONVERTER NOT STILL SELECTED
36	5432	737, 736, 735, 734	PREPARE TO LAUNCH --- COMMAND TO COMPARE GIVEN AZIMUTH TO STORED AZIMUTH VALUE
(37)	54321	737, 736, 735, 734, 733	RESERVED FOR SIM. FLIGHT
(42)	62	738, 734	RESERVED FOR FLIGHT
(43)	621	738, 734, 733	EXERCISE ATTITUDE COMMAND TEST MAXIMUM ATTAINED ON ONE OR MORE AXES
(45)	631	738, 735, 733	READ INPUT DATA SUBROUTINE OVERTIME MESSAGE
(46)	632	738, 735, 734	EXERCISE ATTITUDE COMMAND TEST DRIVING TOWARD NULL
(47)	6321	738, 735, 734, 733	ERROR MONITOR SUBROUTINE ENTRY
(50)	640	738, 736	ABORT TEST STATUS CODE
(51)	641	738, 736, 733	FORCED BEGIN ROUTINE ERROR --- EMR NON-ZERO
(56)	6432	738, 736, 735, 734	VERIFY AND PREPARE TO LOAD ROUTINE TRYING TO LOAD WITHOUT FIRST LOADING PREVIOUS INFORMATION (IF ANY)
(66)	6532	738, 737, 735, 734	ISSUED ON COMPLETION OR REPEATABLE FLT. SIM. RUN
(70)	6540	738, 737, 736	RESERVED FOR SIM. FLIGHT
77	654321	738, 737, 736, 735, 734, 733	FORCES THE EMR SUBROUTINE TO RETURN TO FORCED BEGIN FBDA
31	541	737, 736, 733	UNASSIGNED
32	542	737, 736, 734	LVDC TM TEST
33	5421	737, 736, 734, 733	UNASSIGNED
41	61	738, 733	UNASSIGNED
44	63	738, 735	UNASSINGED
61	651	738, 737, 733	UNASSIGNED

MSFC FORM 422 (VERTICAL) (AUGUST 1960)

NOTICE — When Government drawings, specifications, or other data are used for any purpose other than in connection with a definitely related Government procurement operation, the United States Government thereby incurs no responsibility nor obligation whatsoever; and the fact that the Government may have formulated, furnished, or in any way supplied the said drawings specifications or other data is not to be regarded by implication or otherwise as in any manner licensing the holder or any other person or corporation, or conveying any rights or permission to manufacture, use, or sell any patented invention that may in any way be related thereto.

APPLICATION		PART No.	M F	REVISIONS			
NEXT ASSY	USED ON			SYM	DESCRIPTION	DATE	APPROVAL

AS-503

PROGRAM VERIFICATION

PREPARE TO LAUNCH TEST (FT42)

73V1417

UNLESS OTHERWISE SPECIFIED DIMENSIONS ARE IN INCHES TOLERANCES ON: FRACTIONS DECIMALS ANGLES	ORIGINAL DATE OF DRAWING 7/22/68		PREPARE TO LAUNCH TEST (FT42) AS-503	GEORGE C. MARSHALL SPACE FLIGHT CENTER NATIONAL AERONAUTICS AND SPACE ADMINISTRATION HUNTSVILLE, ALABAMA	
	DRAFTSMAN	CHECKER			
MATERIAL	TRACER	CHECKER			
	ENGINEER	ENGINEER			
HEAT TREATMENT	SUBMITTED For E. N. BRYAN (Alon J Ward)				
FINAL PROTECTIVE FINISH	APPROVED R. A. DRAKEY (R.A. Drakey)		SCALE UNIT WT	DWG SIZE A	73V1417 SHEET 1 OF 11

REVISIONS			
SYM	DESCRIPTION	DATE	APPROVAL

PREPARE TO LAUNCH (FT42)

1.0 SCOPE

THIS PROCEDURE WILL VERIFY THE GUIDANCE SYSTEM TEST PROGRAM "PREPARE TO LAUNCH TEST (FT42)".

2.0 APPLICABLE GOVERNMENT FURNISHED DOCUMENTS

DRAWINGS	
AESS LVDA INTERFACE	50M36401
AESS INSTRUMENT UNIT ESE SATURN V	40M14490
INSTRUMENT UNIT ELECTRICAL SCHEMATICS	40M33221
DOCUMENTS	
IP & C S-IU-503	6009048
TEST PROGRAM SPECIFICATIONS SATURN V LAUNCH COMPUTER COMPLEX AS-503	67-F11-0008
PRELAUNCH CHECKOUT SPECIFICATIONS AND CRITERIA FOR S-IU-503	68-257-0004
OPERATOR REFERENCE MANUAL FOR SLCC PROGRAMMING SYSTEM	68-F11-0003

3.0 GENERAL NOTES

FT42 WILL BE ENTERED FROM KEYBOARD IN ACCORDANCE WITH THE IBM OPERATOR REFERENCE MANUAL. ALL PROGRAM OPTIONS WILL BE EXERCISED AND HARDWARE RESPONSE TO COMPUTER STIMULI WILL BE MONITORED.

4.0 PREREQUISITES

THE ST-124M 3 STABLE PLATFORM SHOULD HAVE BEEN POWERED UP 30 MINUTES PRIOR TO EXECUTION OF GT16, WHICH MUST BE RUN IN ORDER TO EXECUTE FT42.

5.0 PROCEDURE

5.1 VERIFY THAT THE INSTRUMENT UNIT IS POWERED DOWN.

5.2 VERIFY THAT LVDA (603A29) AND LVDC (603A28) STAGE INTERCONNECTING CABLES ARE INSTALLED ACCORDING TO IU CID (40M33080).

5.3 VERIFY THAT POWER SWITCH (S1) ON THE GCP (601-608A13) IS IN THE "OFF" POSITION.

REVISIONS			
SYM	DESCRIPTION	DATE	APPROVAL

PREPARE TO LAUNCH (FT42)

5.4 NOTIFY POWER ROOM TO CLOSE THE IU CIRCUIT BREAKERS AND PLACE THE +6D100 AND +6D200 BACKUP BATTERIES ON LINE.

5.5 START THE +6D100 AND +6D200 POWER SUPPLIES.

5.6 PLACE THE +6D100 AND +6D200 OUTPUT POWER SWITCHES TO THE "ON" POSITION.

5.7 PLACE THE +6D100 AND +6D200 BACKUP BATTERY ENABLE SWITCHES TO THE "ON" POSITION AND VERIFY BACKUP BATTERY ENABLED INDICATIONS ON EVENTS DISPLAY PANEL.

5.8 POWER THE INSTRUMENT UNIT UNTIL THE "GROUND POWER" INDICATION IS RECEIVED.

5.9 VERIFY THAT GSCU IS ON.

5.10 ADJUST +6D100 AND +6D200 REMOTE VOLTAGE METERS TO READ 28V(+2,-0) VIA THE VOLTAGE INCREASE/DECREASE SWITCHES.

5.11 VERIFY ESE/LVDA SWITCH IN ESE POSITION.

5.12 ISSUE A SWITCH SELECTOR REGISTER TEST FOR THE IU AND VERIFY THE REGISTER TEST INDICATION.

5.13 REQUEST MLF COMPUTER ENGINEERING TO VERIFY THAT COMPUTER PERIPHERAL EQUIPMENT IS READY TO SUPPORT.

5.14 REQUEST TEST CONDUCTOR TO VERIFY THAT LCC & MLF DDAS IS IN "RECEIVE".

5.15 REQUEST THAT S-IVB STAGE APPLY POWER UNTIL "READY FOR POWER TRANSFER" INDICATION IS RECEIVED.

5.16 AT THE GCP (601-608A13) PLACE THE POWER ON SWITCH (S1) TO THE AUTO POSITION AND POWER UP THE LVDC USING OPTION 1 OF FT04 (SANDERS DISPLAY CONSOLE #2 CARD KEY #7).

5.17 POWER UP THE S/C SIMULATOR.

5.18 AT THE FCC PANEL PLACE THE POWER SWITCH (S1) TO THE ON POSITION.

5.19 AT THE EDS/CRG PANEL PLACE THE POWER SWITCH TO THE ON POSITION.

5.20 MANUALLY POWER UP THE ST-124M3 STABLE PLATFORM.

5.21 ENABLE THE 6D10, 6D20, 6D30, & 6D40 OAT BATTERY SUBSTITUTE POWER SUPPLIES.

REVISIONS			
SYM	DESCRIPTION	DATE	APPROVAL

PREPARE TO LAUNCH (FT42)

5.22 PLACE THE EDS MODE SWITCH TO THE "LAUNCH" POSITION.

5.23 REQUEST ALL PROPULSION STAGES TO CONFIGURE FOR THE FLIGHT OPTION OF FT42.

5.24 PLACE THE IU SIMULATED LIFTOFF AND SIMULATED FLIGHT TEST SWITCHES TO THE ON POSITION.

5.25 PLACE THE EDS SIMULATED LIFTOFF ENABLE SWITCH TO THE ON POSITION.

5.26 VERIFY THAT THE FOLLOWING LVDA DISCRETE INPUTS INDICATIONS ARE ON: DINS 5, 10, 11, 12, 13, 15 AND 21. ALL INTERRUPTS SHOULD BE OFF WITH THE EXCEPTION OF INT 4. THE DISCRETE INPUT TEST PROGRAM (FT25) MAY BE UTILIZED TO CHECK THE REQUIRED DIN STATUS.

5.27 AT SANDERS DISPLAY CONSOLE #4 KEY #7 EXECUTE THE AZIMUTH LAYING PROGRAM (GT16) TO POSITION THE PLATFORM TO THE FIRING AZIMUTH. ENTER $PA+1730000 AND THEN $PTHO+2810000.

5.28 VERIFY IU READY TO LAUNCH, READY FOR POWER TRANSFER, AND EDS READY.

5.29 AT SANDERS DISPLAY CONSOLE # 2 CARD KEY #7 ENTER THE PREPARE TO LAUNCH PROGRAM (FT42) IN ACCORDANCE WITH THE IBM OPERATORS REFERENCE MANUAL.

5.30 PLACE THE LVDA/ESE SWITCH TO THE LVDA POSITION.

5.31 VERIFY THAT LVDC MODE LIGHTS INDICATE READY TO LAUNCH WITH A PLATFORM (MODE 42) - MDI's 736 & 734.

REVISIONS			
SYM	DESCRIPTION	DATE	APPROVAL

ATTACHMENT "A"

LVDA STATUS CODE CONVERSION CHART

LVDA	MODE	MDI	SOURCE STATEMENT
00	00	NONE	MODE SORT ROUTINE GROUND ENTRY
01	01	733	(PROGRAM CONTINUE ROUTINE)
02	02	734	ACCELEROMETER PULSE COUNT ROUTINE ENTRY
03	21	734, 733	GIMBAL ANGLE MONITOR ROUTINE ENTRY
04	03	735	DISCRETE INPUT ROUTINE ENTRY
05	31	735, 733	DISCRETE OUTPUT ROUTINE ENTRY
06	32	735, 734	G & C STEERING TEST ENTRY
07	321	735, 734, 733	DOM TEST ROUTINE ENTRY
10	40	736	LADDER ERROR TEST ROUTINE ENTRY
11	41	736, 733	PREPARE TO LAUNCH WITHOUT A PLATFORM
12	42	736, 734	PREPARE TO LAUNCH WITH A PLATFORM
13	421	736, 734, 733	EXERCISE ATTITUDE COMMAND ROUTINE MODE 1 ENTRY
14	43	736, 735	COMPUTER INTERFACE UNIT READ ROUTINE ENTRY
15	431	736, 735, 733	SWITCH SELECTOR ROUTINE ENTRY
16	432	736, 735, 734	SECTOR SUM CHECK ROUTINE ENTRY
17	4321	736, 735, 734, 733	EXERCISE ATTITUDE COMMAND ROUTINE MODE 2 ENTRY
20	50	737	SECTOR DUMP ROUTINE ENTRY
21	51	737, 733	VERIFY AND PREPARE TO LOAD ROUTINE ENTRY
22	52	737, 734	MEMORY ERROR TEST
23	521	737, 734, 733	LOAD ROUTINE ENTRY

REVISIONS			
SYM	DESCRIPTION	DATE	APPROVAL

ATTACHMENT "A"

24	53	737, 735	MINOR LOOP, SWITCH SELECTOR AND REAL TIME COUNTER TESTS ENTRY
25	531	737, 735, 733	UNASSIGNED
30	540	737, 736	PREPARE TO LAUNCH SIM. FLT. WITH A PLATFORM
35	5431	737, 736, 735, 733	COMMAND RECEIVER LINKAGE ROUTINE
40	60	738	POWER UP AND INITIALIZE
52	642	738, 736, 734	UNASSIGNED
53	6421	738, 736, 734, 733	(MINOR LOOP, SWITCH SELECTOR, REAL TIME COUNTER TEST ROUTINE)
54	643	738, 736, 735	(LOAD ROUTINE)
55	6431	738, 736, 735, 733	(MEMORY ERROR TEST ROUTINE)
57	64321	738, 736, 735, 734, 733	(SECTOR DUMP ROUTINE)
60	650	738, 737	(EXERCISE ATTITUDE COMMAND ROUTINE MODE 2)
62	652	738, 737, 734	(SWITCH SELECTOR ROUTINE)
63	6521	738, 737, 734, 733	(COMPUTER INTERFACE UNIT READ ROUTINE)
64	653	738, 737, 735	(EXERCISE ATTITUDE COMMAND ROUTINE MODE 1)
65	6531	738, 737, 735, 733	(PREPARE TO LAUNCH ROUTINE)
67	65321	738, 737, 735, 734, 733	(LADDER ERROR TEST ROUTINE)
71	6541	738, 737, 736, 733	(G & C STEERING TEST ROUTINE)
72	6542	738, 737, 736, 734	(DISCRETE OUTPUT ROUTINE)
73	65421	738,737,736,734,733	(DISCRETE INPUT ROUTINE)
74	6543	738, 737, 736, 735	(GIMBAL ANGLE MONITOR ROUTINE)
75	65431	738,737,736,735,733	(ACCELEROMETER PULSE COUNT ROUTINE)
76	65432	738,737,736,735,734	(PROGRAM CONTINUE ROUTINE)
(26)	532	737, 735, 734	FORCED BEGIN AND INITIALIZE ROUTINE ENTRY
(27)	5321	737, 735, 734, 733	SYNC RESET SUBROUTINE OVERTIME MESSAGE

REVISIONS			
SYM	DESCRIPTION	DATE	APPROVAL

ATTACHMENT "A"

(34)	543	737, 736, 735	EXERCISE ATTITUDE COMMAND ROUTINE ERROR ---INITIAL CONVERTER NOT STILL SELECTED
36	5432	737, 736,735,734	PREPARE TO LAUNCH---COMMAND TO COMPARE GIVEN AZIMUTH TO STORED AZIMUTH VALUE.
(37)	54321	737,736,735,734,733	RESERVED FOR SIM. FLIGHT
(42)	62	738, 734	RESERVED FOR FLIGHT
(43)	621	738, 734, 733	EXERCISE ATTITUDE COMMAND TEST MAXIMUM ATTAINED ON ONE OR MORE AXES
(45)	631	738, 735, 733	READ INPUT DATA SUBROUTINE OVERTIME MESSAGE
(46)	632	738, 735, 734	EXERCISE ATTITUDE COMMAND TEST DRIVING TOWARD NULL
(47)	6321	738,735,734,733	ERROR MONITOR SUBROUTINE ENTRY
(50)	640	738, 736	ABORT TEST STATUS CODE
(51)	641	738, 736, 733	FORCED BEGIN ROUTINE ERROR---EMR NON-ZERO
(56)	6432	738, 736, 735, 734	VERIFY AND PREPARE TO LOAD ROUTINE TRYING TO LOAD WITHOUT FIRST LOADING PREVIOUS INFORMATION (IF ANY)
(66)	6532	738, 737, 735, 734	ISSUED ON COMPLETION OR REPEATABLE FLT. SIM. RUN
(70)	6540	738, 737, 736	RESERVE FOR SIM. FLIGHT
77	654321	738,737,736,735,734, 733	FORCES THE EMR SUBROUTINE TO RETURN TO FORCED BEGIN FBDA
31	541	737, 736, 733	UNASSIGNED
32	542	737, 736, 734	LVDC TM TEST
33	5421	737, 736, 734, 733	UNASSIGNED
41	61	738, 733	UNASSIGNED
44	63	738, 735	UNASSIGNED
61	651	738, 737, 733	UNASSIGNED

REVISIONS			
SYM	DESCRIPTION	DATE	APPROVAL

ATTACHMENT "B"

CHNL	OUTPUT FUNCTION	SIGNAL CODE BINARY		OCTAL
1	COMM Q-BALL POWER OFF	0111	1111	177
2	COMM INHIBIT EXCESSIVE P,Y, & R AUTO-ABORT ON	0101	1111	137
3	COMM IU TAPE RECORDER PLAYBACK REVERSE OFF	0110	0010	142
4	COMM FLIGHT CONTROL COMPUTER SWITCH POINT NO. 4	0110	0001	141
5	COMM FLIGHT CONTROL COMPUTER SWITCH POINT NO. 6	0000	0010	2
6		0010	1101	55
7	COMM FLIGHT CONTROL COMPUTER SWITCH POINT NO. 7	0001	1101	35
8		0011	1111	77
9	COMM S-IVB ENGINE OUT INDICATE ENABLE "A" ON	0001	0011	23
10		0110	0011	143
11	COMMAND S-IVB ENGINE OUT INDICATE ENABLE "B" ON	0111	0011	163
12	COMM FLIGHT CONTROL COMPUTER S-IVB BURN MODE OFF	0100	1101	115
13	COMM ENABLE EXCESSIVE P,Y, & R AUTO-ABORT INHIBIT OFF	0111	0010	162
14	COMM IU TAPE RECORDER PLAYBACK OFF	0000	1101	15
15	COMM ENABLE EXCESSIVE P,Y, & R AUTO-ABORT INHIBIT ON	0110	1111	157
16	COMM EDS LIFTOFF ENABLE RELAY RESET	0001	0001	21
17	COMM IU TAPE RECORDER RECORD OFF	0001	1111	37
18		0011	0011	63
19	COMM IU TAPE RECORDER PLAYBACK REVERSE ON	0101	0010	122
20	COMM INHIBIT EXCESSIVE ROLL AUTO-ABORT OFF	0110	1110	156
21	COMM FLIGHT CONTROL COMPUTER SWITCH POINT NO. 2	0100	0001	101

REVISIONS			
SYM	DESCRIPTION	DATE	APPROVAL

ATTACHMENT "B"

CHNL	OUTPUT FUNCTION	SIGNAL CODE BINARY		OCTAL
22	COMM FLIGHT CONTROL COMPUTER SWITCH POINT NO. 3	0101	0001	121
23	COMM TELEMETER CALIBRATION IN-FLIGHT CALIBRATE	0010	0010	42
24	COMM TELEMETER CALIBRATION STOP IN-FLIGHT CALIBRATE	0001	0010	22
25		0011	1101	75
26	COMM FLIGHT CONTROL COMPUTER SWITCH POINT NO. 1	0111	1101	175
27	COMM FLIGHT CONTROL COMPUTER SWITCH POINT NO. 9	0101	1101	135
28	COMM S-IVB RESTART ALERT	0111	1100	174
29	COMM RATE GYROS HIGH RATE ON	0011	1100	74
30		0000	0011	3
31	COMM FLIGHT CONTROL COMPUTERS S-IVB BURN MODE ON	0010	0011	43
32		0100	0011	103
33	COMM SWITCH ENGINE POSITION CONTROL FROM S-IC TO S-II A	0001	1100	34
34	COMM EXCESSIVE ROLL AUTO-ABORT INHIBIT ON	0100	1111	117
35	COMM S-IC ENGINE OUT AUTO-ABORT INHIBIT	0001	1110	36
36	COMM SW S-IVB LOX TO S-II FUEL TANK PRESSURE IND ON	0011	1110	76
37	COMM SW S-IVB LOX TO S-II FUEL TANK PRESSURE IND RESET	0000	0001	1
38	COMM ENABLE LAUNCH VEHICLE ENGINES EDS CUTOFF	0011	0001	61
39	COMM IU TAPE RECORDER RECORD ON	0000	1111	17
40	COMM IU TAPE RECORDER PLAYBACK ON	0010	1111	57
41	COMM INHIBIT EXCESSIVE P,Y, & R AUTO-ABORT OFF	0100	1110	116

REVISIONS			
SYM	DESCRIPTION	DATE	APPROVAL

ATTACHMENT "B"

CHNL	OUTPUT FUNCTION	SIGNAL CODE BINARY		OCTAL
42	COMM ENABLE EXCESSIVE ROLL AUTO-ABORT INHIBIT OFF	0101	1110	136
43	COMM S-IVB ULLAGE THRUST PRESENT ON	0111	1110	176
44	COMM FCC SWITCH POINT NO. 5	0011	0010	62
45				
46	COMM S-IVB ULLAGE THRUST PRESENT OFF	0100	0010	102
47	COMM FCC SWITCH POINT NO. 8	0110	1101	155
48	COMM S-II ENGINE OUT INDICATION ENABLE "B" ON	0010	1100	54
49				
50	COMM INHIBIT EXCESSIVE ROLL AUTO-ABORT ON	0111	0001	161
51	COMM S-IC ENGINE OUT AUTO-ABORT INHIBIT ENABLE	0000	1110	16
52	COMM LET JETTISON "A"	0010	1110	56
53				
54	COMM C-BAND TRANSPONDER NO. 1 & NO. 2 ON	0111	0100	164
55	COMM INHIBIT C-BAND TRANSPONDER NO. 1	0110	0100	144
56	COMM INHIBIT C-BAND TRANSPONDER NO. 2	0101	0100	124
60	SWITCH PCM TO LOW GAIN ANTENNA (FAIL SAFE)	0101	1011	133
62	SWITCH PCM TO HIGH GAIN ANTENNA	0100	1010	112
63	SWITCH CCS TO HIGH GAIN ANTENNA (FAIL SAFE)	0000	0111	007
65	SWITCH CCS TO LOW GAIN ANTENNA	0010	1010	052
74	COMM FCC S-IVB BURN MODE "B" ON	0000	0100	004
75	COMM FCC S-IVB BURN MODE "B" OFF	0001	0100	024
98	COMM AZUSA X-PONDER POWER OFF	0100	0100	104
107	COMM WATER COOLANT VALVE OPEN	0110	0101	145

REVISIONS			
SYM	DESCRIPTION	DATE	APPROVAL

ATTACHMENT "B"

CHNL	OUTPUT FUNCTION	SIGNAL CODE BINARY		OCTAL
108	COMM WATER COOLANT VALVE CLOSED	0100	0101	105
109	SENSOR BIAS ON	0001	0101	025
110	COOLING SYSTEM ELECTRONIC ASSY PWR OFF	0011	0100	064
112	COMM MEASURING RACK POWER OFF	0100	1011	113

MSFC FORM 422 (VERTICAL) (AUGUST 1960)

NOTICE — When Government drawings, specifications, or other data are used for any purpose other than in connection with a definitely related Government procurement operation, the United States Government thereby incurs no responsibility nor obligation whatsoever; and the fact that the Government may have formulated, furnished, or in any way supplied the said drawings specifications or other data is not to be regarded by implication or otherwise as in any manner licensing the holder or any other person or corporation, or conveying any rights or permission to manufacture, use, or sell any patented invention that may in any way be related thereto.

APPLICATION		PART No.	M F	REVISIONS			
NEXT ASSY	USED ON			SYM	DESCRIPTION	DATE	APPROVAL

AS-503

PROGRAM VERIFICATION

SIMULATED FLIGHT MONTIOR (FT27)

73V1418

UNLESS OTHERWISE SPECIFIED DIMENSIONS ARE IN INCHES TOLERANCES ON: FRACTIONS DECIMALS ANGLES	ORIGINAL DATE OF DRAWING 7/19/68 DRAFTSMAN / CHECKER TRACER / CHECKER ENGINEER / ENGINEER	SIMULATED FLIGHT MONITOR (FT27) AS-503	GEORGE C. MARSHALL SPACE FLIGHT CENTER NATIONAL AERONAUTICS AND SPACE ADMINISTRATION HUNTSVILLE, ALABAMA
MATERIAL	SUBMITTED E. N. Bryan E. N. BRYAN		
HEAT TREATMENT			
FINAL PROTECTIVE FINISH	APPROVED R. A. Drakey R. A. DRAKEY	SCALE UNIT WT	DWG SIZE A 73V1418 SHEET 1 OF 9

REVISIONS			
SYM	DESCRIPTION	DATE	APPROVAL

SIMULATED FLIGHT MONITOR PROGRAM (FT27)

1.0 SCOPE

THIS PROCEDURE WILL VERIFY THE GUIDANCE SYSTEM TEST PROGRAM "SIMULATED FLIGHT MONITOR (FT27)".

2.0 APPLICABLE GOVERNMENT FURNISHED DOCUMENTS

DRAWINGS	
AESS LVDA INTERFACE	50M36401
AESS INSTRUMENT UNIT ESE SATURN V	40M14490
INSTRUMENT UNIT ELECTRICAL SCHEMATICS	40M33221
DOCUMENTS	
IP & C S-IU-503	6009048
TEST PROGRAM S PECIFICATIONS SATURN V LAUNCH COMPUTER COMPLEX AS-503	67-F11-0008
PRELAUNCH CHECKOUT SPECIFICATIONS AND CRITERIA FOR S-IU-503	67-257-0004
OPERATOR REFERENCE MANUAL FOR SLCC PROGRAMMING SYSTEM	68-F11-0003

3.0 GENERAL NOTES

FT27 WILL BE ENTERED FROM KEYBOARD IN ACCORDANCE WITH THE IBM OPERATOR REFERENCE MANUAL. ALL PROGRAM OPTIONS WILL BE EXERCISED AND HARDWARE RESPONSE TO COMPUTER STIMULI WILL BE MONITORED.

4.0 PREREQUISITES

PRIOR TO PROGRAM EXECUTION, THE SIMULATED PLUS-TIME TABLE GENERATOR PROGRAM (FU01) MUST BE EXECUTED; BEFORE FT27 IS ENTERED FROM AN OPTION OF FT37, THE PREPARE TO LAUNCH PROGRAM (FT37) MUST BE EXECUTED.

REVISIONS			
SYM	DESCRIPTION	DATE	APPROVAL

SIMULATED FLIGHT MONITOR PROGRAM (FT27)

5.0 PROCEDURE

5.1 VERIFY THAT THE INSTRUMENT UNIT IS POWERED DOWN.

5.2 VERIFY THAT LVDA (603A29) AND LVDC (603A28) STAGE INTERCONNECTING CABLES ARE INSTALLED ACCORDING TO IU CID (40M33080).

5.3 VERIFY THAT POWER SWITCH (S1) ON THE GCP (601-608A13) IS IN THE "OFF" POSITION.

5.4 NOTIFY POWER ROOM TO CLOSE THE IU CIRCUIT BREAKERS AND PLACE THE +6D100 AND +6D200 BACKUP BATTERIES ON LINE.

5.5 START THE +6D100 POWER SUPPLIES.

5.6 PLACE THE +6D100 AND +6D200 OUTPUT POWER SWITCHES TO THE "ON" POSITION.

5.7 PLACE THE +6D100 AND +6D200 BACKUP BATTERY ENABLE SWITCHES TO THE "ON" POSITION AND VERIFY BACKUP BATTERY ENABLED INDICATIONS ON EVENTS DISPLAY PANEL.

5.8 POWER THE INSTRUMENT UNIT UNTIL THE "GROUND POWER" INDICATION IS RECEIVED.

5.9 VERIFY THAT GSCU IS ON.

5.10 ADJUST +6D100 AND +6D200 REMOTE VOLTAGE METERS TO READY 28V(+2,-0) VIA THE VOLTAGE INCREASE/DECREASE SWITCHES.

5.11 VERIFY ESE/LVDA SWITCH IN ESE POSITION.

5.12 ISSUE A SWITCH SELECTOR REGISTER TEST FOR THE IU AND VERIFY THE REGISTER TEST INDICATION.

5.13 REQUEST MLF COMPUTER ENGINEERING TO VERIFY THAT COMPUTER PERIPHERAL EQUIPMENT IS READY TO SUPPORT.

5.14 REQUEST TEST CONDUCTOR TO VERIFY THAT LCC & MLF DDAS IS IN "RECEIVE".

5.15 REQUEST THAT S-IVB STAGE APPLY POWER UNTIL "READY FOR POWER TRANSFER" INDICATION IS RECEIVED.

5.16 PLACE "POWER ON" SWITCH (S1) AT GCP 601-408A13 TO AUTO POSITION.

5.17 ENTER FT04, POWER ON OPTION, IN ACCORDANCE WITH THE IBM OPERATOR REFERENCE MANUAL.

5.18 AT SANDERS' DISPLAY CONSOLE No. 2 KEY 7 ENTER SIMULATED FLIGHT MONITOR PROGRAM (FT27) IN ACCORDANCE WITH THE IBM OPERATOR REFERENCE MANUAL.

REVISIONS			
SYM	DESCRIPTION	DATE	APPROVAL

ATTACHMENT "A"

LVDA STATUS CODE CONVERSION CHART

LVDA	MODE	MDI	SOURCE STATEMENT
00	00	NONE	MODE SORT ROUTINE GROUND ENTRY
01	01	733	(PROGRAM CONTINUE ROUTINE)
02	02	734	ACCELEROMETER PULSE COUNT ROUTINE ENTRY
03	21	734, 733	GIMBAL ANGLE MONITOR ROUTINE ENTRY
04	03	735	DISCRETE INPUT ROUTINE ENTRY
05	31	735, 733	DISCRETE OUTPUT ROUTINE ENTRY
06	32	735, 734	G & C STEERING TEST ENTRY
07	321	735, 734, 733	DOM TEST ROUTINE ENTRY
10	40	736	LADDER ERROR TEST ROUTINE ENTRY
11	41	736, 733	PREPARE TO LAUNCH WITHOUT A PLATFORM
12	42	736, 734	PREPARE TO LAUNCH WITH A PLATFORM
13	421	736, 734, 733	EXERCISE ATTITUDE COMMAND ROUTINE MODE 1 ENTRY
14	43	736, 735	COMPUTER INTERFACE UNIT READ ROUTINE ENTRY
15	431	736, 735, 733	SWITCH SELECTOR ROUTINE ENTRY
16	432	736, 735, 734	SECTOR SUM CHECK ROUTINE ENTRY
17	4321	736, 735, 734, 733	EXERCISE ATTITUDE COMMAND ROUTINE MODE 2 ENTRY
20	50	737	SECTOR DUMP ROUTINE ENTRY
21	51	737, 733	VERIFY AND PREPARE TO LOAD ROUTINE ENTRY
22	52	737, 734	MEMORY ERROR TEST
23	521	737, 734, 733	LOAD ROUTINE ENTRY

ATTACHMENT "A"

REVISIONS			
SYM	DESCRIPTION	DATE	APPROVAL

24	53	737, 735	MINOR LOOP, SWITCH SELECTOR AND REAL TIME COUNTER TESTS ENTRY
25	531	737, 735, 733	UNASSIGNED
30	540	737, 736	PREPARE TO LAUNCH SIM. FLT. WITH A PLATFORM
35	5431	737, 736, 735, 733	COMMAND RECEIVER LINKAGE ROUTINE
40	60	738	POWER UP AND INITIALIZE
52	642	738, 736, 734	UNASSIGNED
53	6421	738, 736, 734, 733	(MINOR LOOP, SWITCH SELECTOR, REAL TIME COUNTER TEST ROUTINE)
54	643	738, 736, 735	(LOAD ROUTINE)
55	6431	738, 736, 735, 733	(MEMORY ERROR TEST ROUTINE)
57	64321	738, 736, 735, 734, 733	(SECTOR DUMP ROUTINE)
60	650	738, 737	(EXERCISE ATTITUDE COMMAND ROUTINE MODE 2)
62	652	738, 737, 734	(SWITCH SELECTOR ROUTINE)
63	652	738, 737, 734, 733	(COMPUTER INTERFACE UNIT READ ROUTINE)
64	653	738, 737, 735	(EXERCISE ATTITUDE COMMAND ROUTINE MODE 1)
65	6531	738, 737, 735, 733	(PREPARE TO LAUNCH ROUTINE)
67	65321	738, 737, 735, 734, 733	(LADDER ERROR TEST ROUTINE)
71	6541	738, 737, 736, 733	(G & C STEERING TEST ROUTINE)
72	6542	738, 737, 736, 734	(DISCRETE OUTPUT ROUTINE)
73	65421	738, 737, 736, 734, 733	(DSICRETE INPUT ROUTINE)
74	6543	738, 737, 736, 735	(GIMBAL ANGLE MONITOR ROUTINE)
75	65431	738, 737, 736, 735, 733	(ACCELEROMETER PULSE COUNT ROUTINE)
76	65432	738, 737, 736, 735, 734	(PROGRAM CONTINUE ROUTINE)
(26)	532	737, 735, 734	FORCED BEGIN AND INITIALIZE ROUTINE ENTRY
(27)	5321	737, 735, 734, 733	SYNC RESET SUBROUTINE OVERTIME MESSAGE

ATTACHMENT "A"

SYM	DESCRIPTION	DATE	APPROVAL
REVISIONS			

(34)	543	737, 736, 735	EXERCISE ATTITUDE COMMAND ROUTINE ERROR --- INITIAL CONVERTER NOT STILL SELECTED
36	5432	737, 736, 735, 734	PREPARE TO LAUNCH---COMMAND TO COMPARE GIVEN AZIMUTH TO STORED AZIMUTH VALUE
(37)	54321	737, 736, 735, 734, 733	RESERVED FOR SIM. FLIGHT
(42)	62	738, 734	RESERVED FOR FLIGHT
(43)	621	738, 734, 733	EXERCISE ATTITUDE COMMAND TEST MAXIMUM ATTAINED ON ONE OR MORE AXES
(45)	631	738, 735, 733	READ INPUT DATA SUBROUTINE OVERTIME MESSAGE
(46)	632	738, 735, 734	EXERCISE ATTITUDE COMMAND TEST DRIVING TOWARD NULL
(47)	6321	738, 735, 734, 733	ERROR MONITOR SUBROUTINE ENTRY
(50)	640	738, 736	ABORT TEST STATUS CODE
(51)	641	738, 736, 733	FORCED BEGIN ROUTINE ERROR --- EMR NON-ZERO
(56)	6432	738, 736, 735, 734	VERIFY AND PREPARE TO LOAD ROUTINE TRYING TO LOAD WITHOUT FIRST LOADING PREVIOUS INFORMATION (IF ANY)
(66)	6532	738, 737, 735, 734	ISSUED ON COMPLETION OF REPEATABLE FLT. SIM. RUN
(70)	6540	738, 737, 736	RESERVE FOR SIM. FLIGHT
77	654321	738, 737, 736, 735, 734, 733	FORCES THE EMR SUBROUTINE TO RETURN TO FORCED BEGIN FBDA
31	541	737, 736, 733	UNASSIGNED
32	542	737, 736, 734	LVDC TM TEST
33	5421	737, 736, 734, 733	UNASSIGNED
41	61	738, 733	UNASSIGNED
44	63	738, 735	UNASSIGNED
61	651	738, 737, 733	UNASSIGNED

ATTACHMENT "B"

REVISIONS			
SYM	DESCRIPTION	DATE	APPROVAL

CHNL	OUTPUT FUNCTION	SIGNAL CODE BINARY		OCTAL
1	COMM Q-BALL POWER OFF	0111	1111	177
2	COMM INHIBIT EXCESSIVE P, Y, & R AUTO-ABORT ON	0101	1111	137
3	COMM IU TAPE RECORDER PLAYBACK REVERSE OFF	0110	0010	142
4	COMM FLIGHT CONTROL COMPUTER SWITCH POINT NO. 4	0110	0001	141
5	COMM FLIGHT CONTROL COMPUTER SWITCH POINT NO. 6	0000	0010	2
6		0010	1101	55
7	COMM FLIGHT CONTROL COMPUTER SWITCH POINT NO. 7	0001	1101	35
8		0011	1111	77
9	COMM S-IVB ENGINE OUT INDICATE ENABLE "A" ON	0001	0011	23
10		0110	0011	143
11	COMMAND S-IVB ENGINE OUT INDICATE ENABLE "B" ON	0111	0011	163
12	COMM FLIGHT CONTROL COMPUTER S-IVB BURN MODE OFF	0100	1101	115
13	COMM ENABLE EXCESSIVE P, Y, & R AUTO-ABORT INHIBIT OFF	0111	0010	162
14	COMM IU TAPE RECORDER PLAYBACK OFF	0000	1101	15
15	COMM ENABLE EXCESSIVE P, Y, & R AUTO-ABORT INHIBIT ON	0110	1111	157
16	COMM EDS LIFTOFF ENABLE RELAY RESET	0001	0001	21
17	COMM IU TAPE RECORDER RECORD OFF	0001	1111	37
18		0011	0011	63
19	COMM IU TAPE RECORDER PLAYBACK REVERSE ON	0101	0010	122
20	COMM INHIBIT EXCESSIVE ROLL AUTO-ABORT OFF	0110	1110	156
21	COMM FLIGHT CONTROL COMPUTER SWITCH POINT NO. 2	0100	0001	101
22	COMM FLIGHT CONTROL COMPUTER SWITCH POINT NO. 3	0101	0001	121
23	COMM TELEMETER CALIBRATION IN-FLIGHT CALIBRATE	0010	0010	42
24	COMM TELEMETER CALIBRATION STOP IN-FLIGHT CALIBRATE	0001	0010	22
25		0011	1101	75

ATTACHMENT "B"

	COMM FLIGHT CONTROL COMPUTER SWITCH POINT NO. 1	0111	1101	175
27	COMM FLIGHT CONTROL COMPUTER SWITCH POINT NO. 9	0101	1101	135
28	COMM S-IVB RESTART ALERT	0111	1100	174
29	COMM RATE GYROS HIGH RATE ON	0011	1100	74
30		0000	0011	3
31	COMM FLIGHT CONTROL COMPUTERS S-IVB BURN MODE ON	0010	0011	43
32		0100	0011	103
33	COMM SWITCH ENGINE POSITION CONTROL FROM S-IC TO S-II A	0001	1100	34
34	COMM EXCESSIVE ROLL AUTO-ABORT INHIBIT ON	0100	1111	117
35	COMM S-IC ENGINE OUT AUTO-ABORT INHIBIT	0001	1110	36
36	COMM SW S-IVB LOX TO S-II FUEL TANK PRESSURE IND ON	0011	1110	76
37	COMM SW S-IVB LOX TO S-II FUEL TANK PRESSURE AND RESET	0000	0001	1
38	COMM ENABLE LAUNCH VEHICLE ENGINES EDS CUTOFF	0011	0001	61
39	COMM IU TAPE RECORDER RECORD ON	0000	1111	17
40	COMM IU TAPE RECORDER PLAYBACK ON	0010	1111	67
41	COMM INHIBIT EXCESSIVE P, Y, & R AUTO-ABORT OFF	0100	1110	116
42	COMM ENABLE EXCESSIVE ROLL AUTO-ABORT INHIBIT OFF	0101	1110	136
43	COMM S-IVB ULLAGE THRUST PRESENT ON	0111	1110	176
44	COMM FCC SWITCH POINT NO. 5	0011	0010	62
45				
46	COMM S-IVB ULLAGE THRUST PRESENT OFF	0100	0010	102
47	COMM FCC SWITCH POINT NO. 8	0110	1101	155
48	COMM S-II ENGINE OUT INDICATION ENABLE "B" ON	0010	1100	54
49				
50	COMM INHIBIT EXCESSIVE ROLL AUTO-ABORT ON	0111	0001	161
51	COMM S-IC ENGINE OUT AUTO-ABORT INHIBIT ENABLE	0000	1110	16
52	COMM LET JETTISON "A"	0010	1110	56

REVISIONS

SYM	DESCRIPTION	DATE	APPROVAL

ATTACHMENT "B"

REVISIONS			
SYM	DESCRIPTION	DATE	APPROVAL

53				
54	COMM C-BAND TRANSPONDER NO. 1 & NO. 2 ON	0111	0100	164
55	COMM INHIBIT C-BAND TRANSPONDER NO. 1	0110	0100	144
56	COMM INHIBIT C-BAND TRANSPONDER NO. 2	0101	0100	124
60	SWITCH PCM TO LOW GAIN ANTENNA (FAIL SAFE)	0101	1011	133
62	SWITCH PCM TO HIGH GAIN ANTENNA	0100	1010	112
63	SWITCH CCS TO HIGH GAIN ANTENNA (FAIL SAFE)	0000	01111	007
65	SWITCH CCS TO LOW GAIN ANTENNA	0010	1010	032
74	COMM FCC S-IVB BURN MODE "B" ON	0000	0100	004
75	COMM FCC S-IVB BURN MODE "B" OFF	0001	0100	02
98	COMM AZUSA X-PONDER POWER OFF	0100	0100	104
107	COMM WATER COOLANT VALVE OPEN	0110	0101	145
108	COMM WATER COLLANT VALVE CLOSED	0100	0101	105
109	SENSOR BIAS ON	0001	0101	025
110	COOLING SYSTEM ELECTRONIC ASSY PWR OFF	0011	0100	064
112	COMM MEASURING RACK POWER OFF	0100	1011	113

MSFC FORM 422 (VERTICAL) (AUGUST 1960)

NOTICE — When Government drawings, specifications, or other data are used for any purpose other than in connection with a definitely related Government procurement operation, the United States Government thereby incurs no responsibility nor obligation whatsoever; and the fact that the Government may have formulated, furnished, or in any way supplied the said drawings specifications or other data is not to be regarded by implication or otherwise as in any manner licensing the holder or any other person or corporation, or conveying any rights or permission to manufacture, use, or sell any patented invention that may in any way be related thereto.

APPLICATION		PART No.	MF	REVISIONS			
NEXT ASSY	USED ON			SYM	DESCRIPTION	DATE	APPROVAL

AS-503

PROGRAM VERIFICATION

SIMULATED FLIGHT POST PROCESSOR (FZ01)

73V1419

UNLESS OTHERWISE SPECIFIED DIMENSIONS ARE IN INCHES TOLERANCES ON: FRACTIONS DECIMALS ANGLES	ORIGINAL DATE OF DRAWING 7/19/68 DRAFTSMAN / CHECKER TRACER / CHECKER ENGINEER / ENGINEER	SIMULATED FLIGHT POST PROCESSOR (FZ01) AS-503	GEORGE C. MARSHALL SPACE FLIGHT CENTER NATIONAL AERONAUTICS AND SPACE ADMINISTRATION HUNTSVILLE, ALABAMA
MATERIAL	SUBMITTED E. N. Bryan E. N. BRYAN		
HEAT TREATMENT	APPROVED R. A. Drakey R. A. DRAKEY	SCALE WT	DWG SIZE A 73V1419 SHEET 1 OF 3
FINAL PROTECTIVE FINISH			

REVISIONS			
SYM	DESCRIPTION	DATE	APPROVAL

1.0 SCOPE

THIS PROCEDURE WILL VERIFY THE "OVERALL SYSTEM POST PROCESSOR PROGRAM (FZ01)".

2.0 APPLICABLE GOVERNMENT FURNISHED DOCUMENTS

DRAWINGS	
AESS LVDA INTERFACE	50M36401
AESS INSTRUMENT UNIT ESE SATURN V	40M14490
INSTRUMENT UNIT ELECTRICAL SCHEMATICS	40M33221
DOCUMENTS	
IP & C S-IU-503	6009048
TEST PROGRAM SPECIFICATIONS SATURN V LAUNCH COMPUTER COMPLEX AS-503	67-F11-0008
PRELAUNCH CHECKOUT SPECIFICATIONS AND CRITERIA FOR S-IU-503	67-257-0008
OPERATOR REFERENCE MANUAL FOR SLCC PROGRAMMING SYSTEM	68-F11-0003

3.0 GENERAL NOTES

FZ01 WILL BE ENTERED FROM KEYBOARD IN ACCORDANCE WITH THE IBM OPERATOR REFERENCE MANUAL. ALL PROGRAM OPTIONS WILL BE EXERCISED AND HARDWARE RESPONSE TO COMPUTER STIMULI WILL BE MONITORED.

4.0 PREREQUISITES

NONE

REVISIONS			
SYM	DESCRIPTION	DATE	APPROVAL

OVERALL SYSTEMS POST PROCESSOR PROGRAM (FZ01)

5.0 PROCEDURE

5.1 VERIFY THAT THE SYSTEM LOG TAPE IS MOUNTED ON MAGNETIC TAPE STATION 3.

5.2 AT SANDERS DISPLAY CONSOLE NO. 3 KEY #1 ENTER OVERALL SYSTEMS POST PROCESSOR PROGRAM (FZ01) IN ACCORDANCE WITH THE IBM OPERATOR REFERENCE MANUAL. EXECUTE AND VERIFY THAT FZ01 PROCESSES THE SYSTEM LOG TAPE AND PRINTS OUT THE SWITCH SELECTOR FUNCTIONS WITH THE TIME OF THEIR OCCURANCE DURING EXECUTION OF THE SIMULATED FLIGHT MONITOR PROGRAM.

MSFC FORM 422 (VERTICAL) (AUGUST 1960)

NOTICE — When Government drawings, specifications, or other data are used for any purpose other than in connection with a definitely related Government procurement operation, the United States Government thereby incurs no responsibility nor obligation whatsoever; and the fact that the Government may have formulated, furnished, or in any way supplied the said drawings specifications or other data is not to be regarded by implication or otherwise as in any manner licensing the holder or any other person or corporation, or conveying any rights or permission to manufacture, use, or sell any patented invention that may in any way be related thereto.

APPLICATION		PART No.	M F	REVISIONS			
NEXT ASSY	USED ON			SYM	DESCRIPTION	DATE	APPROVAL

AS-503

PROGRAM VERIFICATION

LVDC STEERING TEST PROGRAM (FT54)

73V1420

UNLESS OTHERWISE SPECIFIED DIMENSIONS ARE IN INCHES TOLERANCES ON: FRACTIONS DECIMALS ANGLES	ORIGINAL DATE OF DRAWING 7/19/68 DRAFTSMAN / CHECKER TRACER / CHECKER ENGINEER / ENGINEER	LVDC STEERING TEST PROGRAM (FT54) PROGRAM VERIFICATION AS-503	GEORGE C. MARSHALL SPACE FLIGHT CENTER NATIONAL AERONAUTICS AND SPACE ADMINISTRATION HUNTSVILLE, ALABAMA
MATERIAL	SUBMITTED E. N. Bryan E. N. BRYAN		
HEAT TREATMENT			
FINAL PROTECTIVE FINISH	APPROVED R. A. Drakey R. A. DRAKEY	SCALE UNIT WT	DWG SIZE A 73V1420 SHEET 1 OF 4

REVISIONS			
SYM	DESCRIPTION	DATE	APPROVAL

LVDC STEERING TEST PROGRAM (FT54)

1.0 SCOPE

THIS PROCEDURE WILL VERIFY THE GUIDANCE SYSTEM TEST PROGRAM "LVDC STERRING TEST (FT54)".

2.0 APPLICABLE GOVERNMENT FURNISHED DOCUMENTS

DRAWINGS AESS LVDA INTERFACE	50M36401
AESS INSTRUMENT UNIT ESE SATURN V	40M14490
INSTRUMENT UNIT ELECTRICAL SCHEMATICS	40M33221
DOCUMENTS IP & C S-IU-503	6009048
TEST PROGRAM SPECIFICATIONS SATURN V LAUNCH COMPUTER COMPLEX AS-503	67-F11-0008
PRELAUNCH CHECKOUT SPECIFICATIONS AND CRITERIA FOR S-IU-503	
OPERATOR REFERENCE MANUAL FOR SLCC PROGRAMMING SYSTEM	68-F11-0003

3.0 GENERAL NOTES

FT54 WILL BE ENTERED FROM KEYBOARD IN ACCORDANCE WITH THE IBM OPERATOR REFERENCE MANUAL. ALL PROGRAM OPTIONS WILL BE EXERCISED AND HARDWARE RESPONSE TO COMPUTER STIMULI WILL BE MONITORED.

4.0 PREREQUISITES

NONE

REVISIONS			
SYM	DESCRIPTION	DATE	APPROVAL

LVDC STEERING TEST PROGRAM (FT54)

5.0 PROCEDURE

5.1 VERIFY THAT THE INSTRUMENT UNIT IS POWERED DOWN.

5.2 VERIFY THAT THE LVDA (603A29) AND LVDC (603A28) STAGE INTERCONNECTING CABLES ARE INSTALLED ACCORDING TO IU CID (40M33080).

5.3 VERIFY THAT POWER SWITCH (S1) ON THE GCP (601-608A13) IS IN THE "OFF" POSITION.

5.4 NOTIFY POWER ROOM TO CLOSE THE IU CIRCUIT BREAKERS AND PLACE THE +6D100 AND +6D200 BACKUP BATTERIES ON LINE.

5.5 START THE +6D100 AND +6D200 POWER SUPPLIES.

5.6 PLACE THE +6D100 AND +6D200 OUTPUT POWER SWITCHES TO THE "ON" POSITION.

5.7 PLACE THE +6D100 AND +6D200 BACKUP BATTERY ENABLE SWITCHES TO THE "ON" POSITION AND VERIFY BACKUP BATTERY ENABLED INDICATIONS ON EVENTS DISPLAY PANEL.

5.8 POWER THE INSTRUMENT UNIT UNTIL THE "GROUND POWER" INDICATION IS RECEIVED.

5.9 VERIFY THAT GSCU IS ON.

5.10 ADJUST +6D100 AND +6D200 REMOTE VOLTAGE METERS TO READ 28V(+2,-0) VIA THE VOLTAGE INCREASE/DECREASE SWITCHES.

5.11 VERIFY ESE/LVDA SWITCH IN ESE POSITION.

5.12 ISSUE A SWITCH SELECTOR REGISTER TEST FOR THE IU AND VERIFY THE REGISTER TEST INDICATION.

5.13 REQUEST MLF COMPUTER ENGINEERING TO VERIFY THAT COMPUTER PERIPHERAL EQUIPMENT IS READY TO SUPPORT.

5.14 REQUEST TEST CONDUCTOR TO VERIFY THAT LCC & MLF DDAS IS IN "RECEIVE".

5.15 REQUEST THAT S-IVB STAGE APPLY POWER UNTIL "READY FOR POWER TRANSFER" INDICATION IS RECEIVED.

5.16 PLACE "POWER ON" SWITCH (S1) AT GCP 601-608A13 TO AUTO POSITION.

5.17 EXECUTE FT04 POWER ON OPTION, IN ACCORDANCE WITH THE IBM OPERATOR REFERENCE MANUAL.

5.18 VERIFY FLIGHT PROGRAM IS LOADED IN LVDC MEMORY.

REVISIONS			
SYM	DESCRIPTION	DATE	APPROVAL

5.0 PROCEDURES (Cont'd)

5.19 VERIFY THAT THE ST-124M PLATFORM IS POWERED UP AND THAT THE MOVING AND INERTIAL PRISMS ARE ACQUIRED.

5.20 AT SANDERS DISPLAY CONSOLE NO. 2 KEY 7 ENTER LVDC STEERING TEST PROGRAM (FT54) IN ACCORDANCE WITH THE IBM OPERATOR REFERENCE MANUAL. EXECUTE AND VERIFY THAT THE PROGRAM CAN COMMAND THE LVDC TO THE G & C STEERING TEST ROUTINE AND EXIT LEAVING THE LVDC IN THIS ROUTINE (MODE CODE 06).

5.21 RECALL FT54 AT SANDERS DISPLAY CONSOLE. VERIFY THAT THE PROGRAM CAN RETURN THE LVDC TO MODE SORT, RETURN LADDERS TO NULL, AND EXIT.

NOTICE — When Government drawings, specifications, or other data are used for any purpose other than in connection with a definitely related Government procurement operation, the United States Government thereby incurs no responsibility nor obligation whatsoever; and the fact that the Government may have formulated, furnished, or in any way supplied the said drawings specifications or other data is not to be regarded by implication or otherwise as in any manner licensing the holder or any other person or corporation, or conveying any rights or permission to manufacture, use, or sell any patented invention that may in any way be related thereto.

APPLICATION		PART No.	M F	REVISIONS			
NEXT ASSY	USED ON			SYM	DESCRIPTION	DATE	APPROVAL

AS-503

PROGRAM VERIFICATION

SIMULATED PLUS-TIME TABLE GENERATOR (FU01)

73V1421

UNLESS OTHERWISE SPECIFIED DIMENSIONS ARE IN INCHES TOLERANCES ON: FRACTIONS DECIMALS ANGLES	ORIGINAL DATE OF DRAWING 7/19/68 DRAFTSMAN / CHECKER TRACER / CHECKER ENGINEER / ENGINEER	SIMULATED PLUS-TIME TABLE GENERATOR (FU01) AS-503	GEORGE C. MARSHALL SPACE FLIGHT CENTER NATIONAL AERONAUTICS AND SPACE ADMINISTRATION HUNTSVILLE, ALABAMA
MATERIAL	SUBMITTED E. N. Bryan E. N. BRYAN		
HEAT TREATMENT			
FINAL PROTECTIVE FINISH	APPROVED R. A. Drakey R. A. DRAKEY	SCALE UNIT WT	DWG SIZE A 73V1421 SHEET 1 OF 3

REVISIONS			
SYM	DESCRIPTION	DATE	APPROVAL

1.0 SCOPE

THIS PROCEDURE WILL VERIFY THE "SIMULATED PLUS-TIME TABLE GENERATOR PROGRAM (FU01)".

2.0 APPLICABLE GOVERNMENT FURNISHED DOCUMENTS

DOCUMENTS:

TEST PROGRAM SPECIFICATIONS
SATURN V LAUNCH
COMPUTER COMPLEX 67-F11-0008

USERS INSTRUCTIONS FOR THE
OPERATING SYSTEM AND TEST
PROGRAMS FOR THE SATURN V
LAUNCH COMPUTER COMPLEX AS-503 67-F11-0005

3.0 GENERAL NOTES

FU01 WILL BE ENTERED FROM KEYBOARD IN ACCORDANCE WITH IBM OPERATOR REFERENCE MANUAL. ALL PROGRAM OPTIONS WILL BE EXECUTED AND HARDWARE RESPONSE TO COMPUTER STIMULI WILL BE MONITORED.

4.0 PREREQUISITES

NONE

5.0 PROCEDURE

5.1 VERIFY THAT LCCC CARD READER IS "ON" AND "READY".

5.2 VERIFY THAT FU01 CARD DECK IS LOADED IN READER.

5.3 VERIFY THAT LCCC MAGNETIC TAPE STORAGE 1-3 (IODC1) IS OPERABLE.

REVISIONS			
SYM	DESCRIPTION	DATE	APPROVAL

5.4 CALL UP PROGRAM ($TPRQFU01) ON CONSOLE # 2 ,
CARD KEY # 7 AND EXECUTE.

5.5 ENTER OPTION A & BB FOR PROPER DATA TRANSFER MODE ($PABB) AND EXECUTE.

5.6 WHEN PROCESSING OF CARDS IS COMPLETE, INITIAL OPTIONS, WILL BE REDISPLAYED. REPEAT OPTIONS AS NEEDED TO GENERATE TAPE.

5.7 EXIT FROM PROGRAM ($P5).

NOTICE — When Government drawings, specifications, or other data are used for any purpose other than in connection with a definitely related Government procurement operation, the United States Government thereby incurs no responsibility nor obligation whatsoever; and the fact that the Government may have formulated, furnished, or in any way supplied the said drawings specifications or other data is not to be regarded by implication or otherwise as in any manner licensing the holder or any other person or corporation, or conveying any rights or permission to manufacture, use, or sell any patented invention that may in any way be related thereto.

APPLICATION		PART No.	M F	REVISIONS			
NEXT ASSY	USED ON			SYM	DESCRIPTION	DATE	APPROVAL

AS-503

VERIFICATION PROCEDURE

ACCELERATED TIME CONVERSION TEST (FU77)

73V1422

UNLESS OTHERWISE SPECIFIED DIMENSIONS ARE IN INCHES TOLERANCES ON: FRACTIONS DECIMALS ANGLES	ORIGINAL DATE OF DRAWING 7/19/68 DRAFTSMAN / CHECKER TRACER / CHECKER ENGINEER / ENGINEER	ACCELERATED TIME CONVERSION TEST (FU77) AS-503	GEORGE C. MARSHALL SPACE FLIGHT CENTER NATIONAL AERONAUTICS AND SPACE ADMINISTRATION HUNTSVILLE, ALABAMA	
MATERIAL	SUBMITTED E. N. Bryan E. N. BRYAN			
HEAT TREATMENT				
FINAL PROTECTIVE FINISH	APPROVED R. A. Drakey R. A. DRAKEY	SCALE UNIT WT	DWG SIZE A	73V1422 SHEET 1 OF 6

REVISIONS			
SYM	DESCRIPTION	DATE	APPROVAL

ACCELERATED TIME CONVERSION TEST (FU77)

1.0 SCOPE

THIS PROCEDURE WILL VERIFY THE GUIDANCE SYSTEM TEST PROGRAM "ACCELERATED TIME CONVERSION TEST (FU77)".

2.0 APPLICABLE GOVERNMENT FURNISHED DOCUMENTS

DRAWINGS	
AESS LVDA INTERFACE	50M36401
AESS INSTRUMENT UNIT ESE SATURN V	40M14490
INSTRUMENT UNIT ELECTRICAL SCHEMATICS	40M33221
DOCUMENTS	
IP & C S-IU-503	6009048
TEST PROGRAM SPECIFICATIONS SATURN V LAUNCH COMPUTER COMPLEX AS-503	67-F11-0008
PRELAUNCH CHECKOUT SPECIFICATIONS AND CRITERIA FOR S-IU-503	67-257-0004
OPERATOR REFERENCE MANUAL FOR SLCC PROGRAMMING SYSTEM	68-F11-0003

3.0 GENERAL NOTES

FU77 WILL BE ENTERED FROM KEYBOARD IN ACCORDANCE WITH THE IBM OPERATOR REFERENCE MANUAL. ALL PROGRAM OPTIONS WILL BE EXERCISED AND HARDWARE RESPONSE TO COMPUTER STIMULI WILL BE MONITORED.

4.0 PREREQUISITES

NONE

REVISIONS			
SYM	DESCRIPTION	DATE	APPROVAL

5.0 PROCEDURE

5.1 VERIFY THAT THE LCCC CARD READER AND CARD PUNCH ARE "ON" AND "READY".

5.2 REQUEST THAT THE FU77 CARD DECK BE LOADED IN THE LCCC CARD READER.

5.3 AT SANDERS DISPLAY CONSOLE NO. 2, KEY 7, ENTER ACCELERATED TIME CONVERSION PROGRAM FU77 IN ACCORDANCE WITH THE IBM OPERATOR REFERENCE MANUAL.

5.4 ENTER THE OPTION TO PUNCH AND PRINT DATA ($P0).

5.5 ENTER THE OPTION TO PRINT DATA ONLY ($P1).

REVISIONS			
SYM	DESCRIPTION	DATE	APPROVAL

ATTACHMENT "A"

LVDA STATUS CODE CONVERSION CHART

LVDA	MODE	MDI	SOURCE STATEMENT
00	00	NONE	MODE SORT ROUTINE GROUND ENTRY
01	01	733	(PROGRAM CONTINUE ROUTINE)
02	02	734	ACCELEROMETER PULSE COUNT ROUTINE ENTRY
03	21	734, 733	GIMBAL ANGLE MONITOR ROUTINE ENTRY
04	03	735	DISCRETE INPUT ROUTINE ENTRY
05	31	735, 733	DISCRETE OUTPUT ROUTINE ENTRY
06	32	735, 734	G & C STEERING TEST ENTRY
07	321	735, 734, 733	DOM TEST ROUTINE ENTRY
10	40	736	LADDER ERROR TEST ROUTINE ENTRY
11	41	736, 733	PREPARE TO LAUNCH WITHOUT A PLATFORM
12	42	736, 734	PREPARE TO LAUNCH WITH A PLATFORM
13	421	736, 734, 733	EXERCISE ATTITUDE COMMAND ROUTINE MODE 1 ENTRY
14	43	736, 735	COMPUTER INTERFACE UNIT READ ROUTINE ENTRY
15	431	736, 735, 733	SWITCH SELECTOR ROUTINE ENTRY
16	432	736, 735, 734	SECTOR SUM CHECK ROUTINE ENTRY
17	4321	736, 735, 734, 733	EXERCISE ATTITUDE COMMAND ROUTINE MODE 2 ENTRY
20	50	737	SECTOR DUMP ROUTINE ENTRY
21	51	737, 733	VERIFY AND PREPARE TO LOAD ROUTINE ENTRY
22	52	737, 734	MEMORY ERROR TEST
23	521	737, 734, 733	LOAD ROUTINE ENTRY
24	53	737, 735	MINOR LOOP, SWITCH SELECTOR AND REAL TIME COUNTER TESTS ENTRY
25	531	737, 735, 733	UNASSIGNED
30	540	737, 736	PREPARE TO LAUNCH SIM. FLT. WITH A PLATFORM

ATTACHMENT "A"

REVISIONS			
SYM	DESCRIPTION	DATE	APPROVAL

35	5431	737, 736, 735, 733	COMMAND RECEIVER LINKAGE ROUTINE
40	60	738	POWER UP AND INITIALIZE
52	642	738, 736, 734	UNASSIGNED
53	6421	738, 736, 734, 733	(MINOR LOOP, SWITCH SELECTOR, REAL TIME COUNTER TEST ROUTINE)
54	643	738, 736, 735	(LOAD ROUTINE)
55	6431	738, 736, 735, 733	(MEMORY ERROR TEST ROUTINE)
57	64321	738, 736, 735, 734, 733	(SECTOR DUMP ROUTINE)
60	650	738, 737	(EXERCISE ATTITUDE COMMAND ROUTINE MODE 2)
62	652	738, 737, 734	(SWITCH SELECTOR ROUTINE)
63	6521	738, 737, 734, 733	(COMPUTER INTERFACE UNIT READ ROUTINE)
64	653	738, 737, 735	(EXERCISE ATTITUDE COMMAND ROUTINE MODE 1)
65	6531	738, 737, 735, 733	(PREPARE TO LAUNCH ROUTINE)
67	65321	738, 737, 735, 734, 733	(LADDER ERROR TEST ROUTINE)
71	6541	738, 737, 736, 733	(G & C STEERING TEST ROUTINE)
72	6542	738, 737, 736, 734	(DISCRETE OUTPUT ROUTINE)
73	65421	738, 737, 736, 734, 733	(DISCRETE INPUT ROUTINE)
74	6543	738, 737, 736, 735	(GIMBAL ANGLE MONITOR ROUTINE)
75	65431	738, 737, 736, 735, 733	(ACCELEROMETER PULSE COUNT ROUTINE)
76	65432	738, 737, 736, 735, 734	(PROGRAM CONTINUE ROUTINE)
(26)	532	737, 735, 734	FORCED BEGIN AND INITIALIZE ROUTINE ENTRY
(27)	5321	737, 735, 734, 733	SYNC RESET SUBROUTINE OVERTIME MESSAGE
(34)	543	737, 736, 735	EXERCISE ATTITUDE COMMAND ROUTINE ERROR --- INITIAL CONVERTER NOT STILL SELECTED
36	5432	737, 736, 735, 734	PREPARE TO LAUNCH --- COMMAND TO COMPARE GIVEN AZIMUTH TO STORED AZIMUTH VALUE
(37)	54321	737, 736, 735, 734, 733	RESERVED FOR SIM. FLIGHT
(42)	62	738, 734	RESERVED FOR FLIGHT

REVISIONS			
SYM	DESCRIPTION	DATE	APPROVAL

(43)	621	738, 734, 733	EXERCISE ATTITUDE COMMAND TEST MAXIMUM ATTAINED ON ONE OR MORE AXES
(45)	631	738, 735, 733	READ INPUT DATA SUBROUTINE OVERTIME MESSAGE
(46)	632	738, 735, 734	EXERCISE ATTITUDE COMMAND TEST DRIVING TOWARD NULL
(47)	6321	738, 735, 734, 733	ERROR MONITOR SUBROUTINE ENTRY
(50)	640	738, 736	ABORT TEST STATUS CODE
(51)	641	738, 736, 733	FORCED BEGIN ROUTINE ERROR --- EMR NON-ZERO
(56)	6432	738, 736, 735, 734	VERIFY AND PREPARE TO LOAD ROUTINE TRYING TO LOAD WITHOUT FIRST LOADING PREVIOUS INFORMATION (IF ANY)
(66)	6532	738, 737, 735, 734	ISSUED ON COMPLETION OR REPEATABLE FLT. SIM. RUN
(70)	6540	738, 737, 736	RESERVE FOR SIM. FLIGHT
77	654321	738, 737, 736, 735, 734, 733	FORCES THE EMR SUBROUTINE TO RETURN TO FORCED BEGIN FBDA
31	541	737, 736, 733	UNASSIGNED
32	542	737, 736, 734	LVDC TM TEST
33	5421	737, 736, 734, 733	UNASSIGNED
41	61	738, 733	UNASSIGNED
44	63	738, 735	UNASSIGNED
61	651	738, 737, 733	UNASSIGNED

NOTICE — When Government drawings, specifications, or other data are used for any purpose other than in connection with a definitely related Government procurement operation, the United States Government thereby incurs no responsibility nor obligation whatsoever; and the fact that the Government may have formulated, furnished, or in any way supplied the said drawings specifications or other data is not to be regarded by implication or otherwise as in any manner licensing the holder or any other person or corporation, or conveying any rights or permission to manufacture, use, or sell any patented invention that may in any way be related thereto.

APPLICATION		PART No.	MF	REVISIONS			
NEXT ASSY	USED ON			SYM	DESCRIPTION	DATE	APPROVAL

AS-503

VERIFICATION PROCEDURE

ACCELEROMETER MONITOR DISPLAY CONTROL (FT49)

73V1423

UNLESS OTHERWISE SPECIFIED DIMENSIONS ARE IN INCHES TOLERANCES ON: FRACTIONS DECIMALS ANGLES	ORIGINAL DATE OF DRAWING 7/19/68 DRAFTSMAN / CHECKER TRACER / CHECKER ENGINEER / ENGINEER	ACCELEROMETER MONITOR DISPLAY CONTROL (FT49) AS-503	GEORGE C. MARSHALL SPACE FLIGHT CENTER NATIONAL AERONAUTICS AND SPACE ADMINISTRATION HUNTSVILLE, ALABAMA
MATERIAL	SUBMITTED Don J. Ward for E. N. BRYAN		
HEAT TREATMENT		SCALE	DWG SIZE A — 73V1423
FINAL PROTECTIVE FINISH	APPROVED R. A. Drakey R. A. DRAKEY	UNIT WT	SHEET 1 OF 6

REVISIONS			
SYM	DESCRIPTION	DATE	APPROVAL

ACCELEROMETER MONITOR DISPLAY CONTROL PROGRAM (FT49)

1.0 SCOPE

THIS PROCEDURE WILL VERIFY THE GUIDANCE SYSTEM TEST PROGRAM "ACCELEROMETER MONITOR DISPLAY CONTROL (FT49)."

2.0 APPLICABLE GOVERNMENT FURNISHED DOCUMENTS

DRAWINGS AESS LVDA INTERFACE	50M36401
AESS INSTRUMENT UNIT ESE SATURN V	40M14490
INSTRUMENT UNIT ELECTRICAL SCHEMATICS	40M33221
DOCUMENTS IP & C S-IU-503	6009048
TEST PROGRAM SPECIFICATIONS SATURN V LAUNCH COMPUTER COMPLEX AS-503	67-F11-0008
PRELAUNCH CHECKOUT SPECIFICATIONS AND CRITERIA FOR S-IU-503	67-257-0004
OPERATOR REFERENCE MANUAL FOR SLCC PROGRAMMING SYSTEM	68-F11-0003

3.0 GENERAL NOTES

FT49 WILL BE ENTERED FROM KEYBOARD IN ACCORDANCE WITH THE IBM OPERATOR REFERENCE MANUAL. ALL PROGRAM OPTIONS WILL BE EXERCISED AND HARDWARE RESPONSE TO COMPUTER STIMULI WILL BE MONITORED.

4.0 PREREQUISITES

NONE

5.0 PROCEDURE

5.1 VERIFY THAT THE INSTRUMENT UNIT IS POWERED DOWN.

5.2 VERIFY THAT LVDA (603A29) AND LVDC (603A28) STAGE INTERCONNECTING CABLES ARE INSTALLED ACCORDING TO IU CID (40M33080).

5.3 VERIFY THAT POWER SWITCH (S1) ON THE GCP (601-608A13) IS IN THE "OFF" POSITION.

REVISIONS			
SYM	DESCRIPTION	DATE	APPROVAL

4.0 PROCEDURE (Cont'd)

5.4 NOTIFY POWER ROOM TO CLOSE THE IU CIRCUIT BREAKERS AND PLACE THE +6D100 AND +6D200 BACKUP BATTERIES ON LINE.

5.5 START THE +6D100 AND +6D200 POWER SUPPLIES.

5.6 PLACE THE +6D100 AND +6D200 OUTPUT POWER SWITCHES TO THE "ON" POSITION.

5.7 PLACE THE +6D100 AND +6D200 BACKUP BATTERY ENABLE SWITCHES TO THE "ON" POSITION AND VERIFY BACKUP BATTERY ENABLED INDICATIONS ON EVENTS DISPLAY PANEL.

5.8 POWER THE INSTRUMENT UNIT UNTIL THE "GROUND POWER" INDICATION IS RECEIVED.

5.9 VERIFY THAT GSCU IS ON.

5.10 ADJUST +6D100 AND +6D200 REMOTE VOLTAGE METERS TO READ 28V(+2,-0) VIA THE VOLTAGE INCREASE/DECREASE SWITCHES.

5.11 VERIFY ESE/LVDA SWITCH IN ESE POSITION.

5.12 ISSUE A SWITCH SELECTOR REGISTER TEST FOR THE IU AND VERIFY THE REGISTER TEST INDICATION.

5.13 REQUEST MLF COMPUTER ENGINEERING TO VERIFY THAT COMPUTER PERIPHERAL EQUIPMENT IS READY TO SUPPORT.

5.14 REQUEST TEST CONDUCTOR TO VERIFY THAT LCC & MLF DDAS IS IN "RECEIVE".

5.15 REQUEST THAT S-IVB STAGE APPLY POWER UNTIL "READY FOR POWER TRANSFER" INDICATION IS RECEIVED.

5.16 POWER UP ST-124M PLATFORM.

5.17 PLACE "POWER ON" SWITCH (S1) AT GCP 601-608A13 TO AUTO POSITION.

5.18 ENTER FT04, POWER ON OPTION, IN ACCORDANCE WITH THE IBM OPERATOR REFERENCE MANUAL.

5.19 AT SANDERS DISPLAY CONSOLE NO. 2 KEY 7 , ENTER ACCELEROMETER MONITOR DISPLAY CONTROL (FT49) IN ACCORDANCE WITH THE IBM OPERATOR REFERENCE MANUAL.

DURING EXECUTION OF FT49, AT GCP 601-608A13, MONITOR:

ACCELEROMETER MONITOR ROUTINE MODE CODE 02
MDI 734 - ON

REVISIONS			
SYM	DESCRIPTION	DATE	APPROVAL

ATTACHMENT "A"

LVDA	MODE	MDI	SOURCE STATEMENT
00	00	NONE	MODE SORT ROUTINE GROUND ENTRY
01	01	733	(PROGRAM CONTINUE ROUTINE)
02	02	734	ACCELEROMETER PULSE COUNT ROUTINE ENTRY
03	21	734, 733	GIMBAL ANGLE MONITOR ROUTINE ENTRY
04	03	735	DISCRETE INPUT ROUTINE ENTRY
05	31	735, 733	DISCRETE OUTPUT ROUTINE ENTRY
06	32	735, 734	G & C STEERING TEST ENTRY
07	321	735, 734, 733	DOM TEST ROUTINE ENTRY
10	40	736	LADDER ERROR TEST ROUTINE ENTRY
11	41	736, 733	PREPARE TO LAUNCH WITHOUT A PLATFORM
12	42	736, 734	PREPARE TO LAUNCH WITH A PLATFORM
13	421	736, 734, 733	EXERCISE ATTITUDE COMMAND ROUTINE MODE 1 ENTRY
14	43	736, 735	COMPUTER INTERFACE UNIT READ ROUTINE ENTRY
15	431	736, 735, 733	SWITCH SELECTOR ROUTINE ENTRY
16	432	736, 735, 734	SECTOR SUM CHECK ROUTINE ENTRY
17	4321	736, 735, 734, 733	EXERCISE ATTITUDE COMMAND ROUTINE MODE 2 ENTRY
20	50	737	SECTOR DUMP ROUTINE ENTRY
21	51	737, 733	VERIFY AND PREPARE TO LOAD ROUTINE ENTRY
22	52	737, 734	MEMORY ERROR TEST
23	521	737, 734, 733	LOAD ROUTINE ENTRY
24	53	737, 735	MINOR LOOP, SWITCH SELECTOR AND REAL TIME COUNTER TESTS ENTRY
25	531	737, 735, 733	UNASSIGNED
30	540	737, 736	PREPARE TO LAUNCH SIM. FLT, WITH A PLATFORM

REVISIONS			
SYM	DESCRIPTION	DATE	APPROVAL

35	5431	737, 736, 735, 733	COMMAND RECEIVER LINKAGE ROUTINE
40	60	738	POWER UP AND INITIALIZE
52	642	738, 736, 734	UNASSIGNED
53	6421	738, 736, 734, 733	(MINOR LOOP, SWITCH SELECTOR, REAL TIME COUNTER TEST ROUTINE)
54	643	738, 736, 735	(LOAD ROUTINE)
55	6431	738, 736, 735, 733	(MEMORY ERROR TEST ROUTINE)
57	64321	738, 736, 735, 734, 733	(SECTOR DUMP ROUTINE)
60	650	738, 737	(EXERCISE ATTITUDE COMMAND ROUTINE MODE 2)
62	652	738, 737, 734	(SWITCH SELECTOR ROUTINE)
63	6521	738, 737, 734, 733	(COMPUTER INTERFACE UNIT READ ROUTINE)
64	653	738, 737, 735	(EXERCISE ATTITUDE COMMAND ROUTINE MODE 1)
65	6531	738, 737, 735, 733	(PREPARE TO LAUNCH ROUTINE)
67	65321	738, 737, 735, 734, 733	(LADDER ERROR TEST ROUTINE)
71	6541	738, 737, 736, 733	(G & C STEERING TEST ROUTINE)
72	6542	738, 737, 736, 734	(DISCRETE OUTPUT ROUTINE)
73	65421	738, 737, 736, 734, 733	(DISCRETE INPUT ROUTINE)
74	6543	738, 737, 736, 735	(GIMBAL ANGLE MONITOR ROUTINE)
75	65431	738, 737, 736, 735, 733	(ACCELEROMETER PULSE COUNT ROUTINE)
76	65432	738, 737, 736, 735, 734	(PROGRAM CONTINUE ROUTINE)
(26)	532	737, 735, 734	FORCED BEGIN AND INITIALIZE ROUTINE ENTRY
(27)	5321	737, 735, 734, 733	SYNC RESET SUBROUTINE OVERTIME MESSAGE
(34)	543	737, 736, 735	EXERCISE ATTITUDE COMMAND ROUTINE ERROR --- INITIAL CONVERTER NOT STILL SELECTED
36	5432	737, 736, 735, 734	PREPARE TO LAUNCH --- COMMAND TO COMPARE GIVEN AZIMUTH TO STORED AZIMUTH VALUE
(37)	54321	737, 736, 735, 734, 733	RESERVED FOR SIM. FLIGHT
(42)	62	738, 734	RESERVED FOR FLIGHT

REVISIONS			
SYM	DESCRIPTION	DATE	APPROVAL

(43)	621	738, 734, 733	EXERCISE ATTITUDE COMMAND TEST MAXIMUM ATTAINED ON ONE OR MORE AXES
(45)	631	738, 735, 733	READ INPUT DATA SUBROUTINE OVERTIME MESSAGE
(46)	632	738, 735, 734	EXERCISE ATTITUDE COMMAND TEST DRIVING TOWARD NULL
(47)	6321	738, 735, 734, 733	ERROR MONITOR SUBROUTINE ENTRY
(50)	640	738, 736	ABORT TEST STATUS CODE
(51)	641	738, 736, 733	FORCED BEGIN ROUTINE ERROR --- EMR NON-ZERO
(56)	6432	738, 736, 735, 734	VERIFY AND PREPARE TO LOAD ROUTINE TRYING TO LOAD WITHOUT FIRST LOADING PREVIOUS INFORMATION (IF ANY)
(66)	6532	738, 737, 735, 734	ISSUED ON COMPLETION OR REPEATABLE FLT. SIM. RUN
(70)	6540	738, 737, 736	RESERVE FOR SIM. FLIGHT
77	654321	738, 737, 736, 735, 734, 733	FORCES THE EMR SUBROUTINE TO RETURN TO FORCED BEGIN FBDA
31	541	737, 736, 733	UNASSIGNED
32	542	737, 736, 734	LVDC TM TEST
33	5421	737, 736, 734, 733	UNASSIGNED
41	61	738, 733	UNASSIGNED
44	63	738, 735	UNASSIGNED
61	651	738, 737, 733	UNASSIGNED

MSFC FORM 422 (VERTICAL) (AUGUST 1960)

NOTICE — When Government drawings, specifications, or other data are used for any purpose other than in connection with a definitely related Government procurement operation, the United States Government thereby incurs no responsibility nor obligation whatsoever; and the fact that the Government may have formulated, furnished, or in any way supplied the said drawings specifications or other data is not to be regarded by implication or otherwise as in any manner licensing the holder or any other person or corporation, or conveying any rights or permission to manufacture, use, or sell any patented invention that may in any way be related thereto.

APPLICATION		PART No.	M F
NEXT ASSY	USED ON		

REVISIONS			
SYM	DESCRIPTION	DATE	APPROVAL

AS-503

VERIFICATION PROCEDURE

ACCELEROMETER MONITOR TEST (FE50)

73V1424

UNLESS OTHERWISE SPECIFIED DIMENSIONS ARE IN INCHES TOLERANCES ON: FRACTIONS DECIMALS ANGLES	ORIGINAL DATE OF DRAWING 7/19/68	ACCELEROMETER MONITOR TEST (FE50) SA-503	GEORGE C. MARSHALL SPACE FLIGHT CENTER NATIONAL AERONAUTICS AND SPACE ADMINISTRATION HUNTSVILLE, ALABAMA
MATERIAL	DRAFTSMAN / CHECKER TRACER / CHECKER ENGINEER / ENGINEER		
HEAT TREATMENT	SUBMITTED E. N. Bryan E. N. Bryan		
FINAL PROTECTIVE FINISH	APPROVED R. A. Drakey R. A. Drakey	SCALE UNIT WT	DWG SIZE A 73V1424 SHEET 1 OF 2

REVISIONS			
SYM	DESCRIPTION	DATE	APPROVAL

ACCELEROMETER MONITOR TEST PROGRAM (FE50)

1.0 SCOPE

THIS PROCEDURE WILL VERIFY THE "ACCELEROMETER MONITOR TEST PROGRAM (FE50)".

2.0 APPLICABLE GOVERNMENT FURNISHED DOCUMENTS

DRAWINGS AESS LVDA INTERFACE	50M36401
AESS INSTRUMENT UNIT ESE SATURN V	40M14490
INSTRUMENT UNIT ELECTRICAL SCHEMATICS	40M33221
DOCUMENTS IP & C S-IU-503	6009048
TEST PROGRAM SPECIFICATIONS SATURN V LAUNCH COMPUTER COMPLEX AS-503	67-F11-0008
PRELAUNCH CHECKOUT SPECIFICATIONS AND CRITERIA FOR S-IU-503	67-257-0004
OPERATOR REFERENCE MANUAL FOR SLCC PROGRAMMING SYSTEM	68-F11-0003

3.0 GENERAL NOTES

FE50 WILL BE ENTERED FROM KEYBOARD IN ACCORDANCE WITH THE IBM OPERATOR REFERENCE MANUAL. ALL PROGRAM OPTIONS WILL BE EXERCISED AND HARDWARE RESPONSE TO COMPUTER STIMULIT WILL BE MONITORED.

4.0 PREREQUISITES

ACCELEROMETER MONITOR DISPLAY CONTROL PROGRAM (FT49) MUST BE EXECUTED IN ORDER TO CALL FE50.

5.0 PROCEDURE

NONE - THE TEST PROGRAM (FT50) IS AN AUTOMATIC MONITOR PROGRAM.

NOTICE — When Government drawings, specifications, or other data are used for any purpose other than in connection with a definitely related Government procurement operation, the United States Government thereby incurs no responsibility nor obligation whatsoever; and the fact that the Government may have formulated, furnished, or in any way supplied the said drawings specifications or other data is not to be regarded by implication or otherwise as in any manner licensing the holder or any other person or corporation, or conveying any rights or permission to manufacture, use, or sell any patented invention that may in any way be related thereto.

APPLICATION		PART No.	M F	REVISIONS			
NEXT ASSY	USED ON			SYM	DESCRIPTION	DATE	APPROVAL

AS-503

VERIFICATION PROGRAM

LVDC TELEMETRY TEST (FT55)

73V1425

UNLESS OTHERWISE SPECIFIED DIMENSIONS ARE IN INCHES TOLERANCES ON: FRACTIONS DECIMALS ANGLES	ORIGINAL DATE OF DRAWING 7/19/68 DRAFTSMAN / CHECKER TRACER / CHECKER ENGINEER / ENGINEER	LVDC TELEMETRY TEST (FT55) AS-503	GEORGE C. MARSHALL SPACE FLIGHT CENTER NATIONAL AERONAUTICS AND SPACE ADMINISTRATION HUNTSVILLE, ALABAMA
MATERIAL	SUBMITTED E. N. Bryan E. N. BRYAN		
HEAT TREATMENT	APPROVED R. A. DRAKEY	SCALE / DWG SIZE A	73V1425
FINAL PROTECTIVE FINISH		UNIT WT	SHEET 1 OF 7

REVISIONS			
SYM	DESCRIPTION	DATE	APPROVAL

LVDC TELEMETRY TEST PROGRAM (FT55)

1.0 SCOPE

THIS PROCEDURE WILL VERIFY THE GUIDANCE SYSTEM TEST PROGRAM "LVDC TELEMETRY TEST (FT55)".

2.0 APPLICABLE GOVERNMENT FURNISHED DOCUMENTS

DRAWINGS AESS LVDA INTERFACE	50M36401
AESS INSTRUMENT UNIT ESE SATURN V	40M14490
INSTRUMENT UNIT ELECTRICAL SCHEMATICS	40M33221
DOCUMENTS IP & C S-IU-503	6009048
TEST PROGRAM SPECIFICATIONS SATURN V LAUNCH COMPUTER COMPLEX AS-503	67-F11-0008
PRELAUNCH CHECKOUT SPECIFICATIONS AND CRITERIA FOR S-IU-503	67-257-0004
OPERATOR REFERENCE MANUAL FOR SLCC PROGRAMMING SYSTEM	68-F11-0003

3.0 GENERAL NOTES

FT55 WILL BE ENTERED FROM KEYBOARD IN ACCORDANCE WITH THE IBM OPERATOR REFERENCE MANUAL. ALL PROGRAM OPTIONS WILL BE EXERCISED AND HARDWARE RESPONSE TO COMPUTER STIMULI WILL BE MONITORED.

4.0 PREREQUISITES

NONE

5.0 PROCEDURE

5.1 VERIFY THAT THE INSTRUMENT UNIT IS POWERED DOWN.

5.2 VERIFY THAT LVDA (603A29) AND LVDC (603A28) STAGE INTERCONNECTING CABLES ARE INSTALLED ACCORDING TO IU CID (40M33080).

5.3 VERIFY THAT POWER SWITCH (S1) ON THE GCP (601-608A13) IS IN THE "OFF" POSITION.

REVISIONS			
SYM	DESCRIPTION	DATE	APPROVAL

5.0 PROCEDURES (Cont'd)

5.4 NOTIFY POWER ROOM TO CLOSE THE IU CIRCUIT BREAKERS AND PLACE THE +6D100 AND +6D200 BACKUP BATTERIES ON LINE.

5.5 START THE +6D100 AND +6D200 POWER SUPPLIES.

5.6 PLACE THE +6D100 AND +6D200 OUTPUT POWER SWITCHES TO THE "ON" POSITION.

5.7 PLACE THE +6D100 AND +6D200 BACKUP BATTERY ENABLE SWITCHES TO THE "ON" POSITION AND VERIFY BACKUP BATTERY ENABLED INDICATIONS ON EVENTS DISPLAY PANEL.

5.8 POWER THE INSTRUMENT UNIT UNTIL THE "GROUND POWER" INDICATION IS RECEIVED.

5.9 VERIFY THAT GSCU IS ON.

5.10 ADJUST +6D100 AND +6D200 REMOTE VOLTAGE METERS TO READ 28V(+2,-0) VIA THE VOLTAGE INCREASE/DECREASE SWITCHES.

5.11 VERIFY ESE/LVDA SWITCH IN ESE POSITION.

5.12 ISSUE A SWITCH SELECTOR REGISTER TEST FOR THE IU AND VERIFY THE REGISTER TEST INDICATION.

5.13 REQUEST MLF COMPUTER ENGINEERING TO VERIFY THAT COMPUTER PERIPHERAL EQUIPMENT IS READY TO SUPPORT.

5.14 REQUEST TEST CONDUCTOR TO VERIFY THAT LCC & MLF DDAS IS IN "RECEIVE".

5.15 REQUEST THAT S-IVB STAGE APPLY POWER UNTIL "READY FOR POWER TRANSFER" INDICATION IS RECEIVED.

5.16 PLACE "POWER ON" SWITCH (S1) AT GCP 601-608A13 TO AUTO POSITION.

5.17 ENTER FT04, POWER ON OPTION, IN ACCORDANCE WITH THE IBM OPERATOR REFERENCE MANUAL.

5.18 REQUEST LCC DDAS TO MOUNT CLEAN TAPE ON DDAS TAPE RECORDER TO RECORD DATA DURING EXECUTION OF PROGRAM.

5.19 AT SANDERS DISPLAY CONSOLE NO. 2, KEY 7 ENTER LVDC TELEMETRY TEST (FT55) IN ACCORDANCE WITH THE IBM OPERATOR REFERENCE MANUAL. EXECUTE AND VERIFY LVDC TELEMETRY TEST PROGRAM (FT55).

DURING EXECUTION OF FT55, AT GCP 601-608A13, MONITOR:

LVDC TM TEST

MODE CODE 32

REVISIONS			
SYM	DESCRIPTION	DATE	APPROVAL

5.0 PROCEDURES (Cont'd)

5.20 REQUEST LCC COMPUTER PERSONNEL TO POST PROCESS DDAS TAPE USING FUDD AND FUNN TEST PROGRAMS.

REVISIONS			
SYM	DESCRIPTION	DATE	APPROVAL

ATTACHMENT "A"

LVDA	MODE	MDI	SOURCE STATEMENT
00	00	NONE	MODE SORT ROUTINE GROUND ENTRY
01	01	733	(PROGRAM CONTINUE ROUTINE)
02	02	734	ACCELEROMETER PULSE COUNT ROUTINE ENTRY
03	21	734, 733	GIMBAL ANGLE MONITOR ROUTINE ENTRY
04	03	735	DISCRETE INPUT ROUTINE ENTRY
05	31	735, 733	DISCRETE OUTPUT ROUTINE ENTRY
06	32	735, 734	G & C STEERING TEST ENTRY
07	321	735, 734, 733	DOM TEST ROUTINE ENTRY
10	40	736	LADDER ERROR TEST ROUTINE ENTRY
11	41	736, 733	PREPARE TO LAUNCH WITHOUT A PLATFORM
12	42	736, 734	PREPARE TO LAUNCH WITH A PLATFORM
13	421	736, 734, 733	EXERCISE ATTITUDE COMMAND ROUTINE MODE 1 ENTRY
14	43	736, 735	COMPUTER INTERFACE UNIT READ ROUTINE ENTRY
15	431	736, 735, 733	SWITCH SELECTOR ROUTINE ENTRY
16	432	736, 735, 734	SECTOR SUM CHECK ROUTINE ENTRY
17	4321	736, 735, 734, 733	EXERCISE ATTITUDE COMMAND ROUTINE MODE 2 ENTRY
20	50	737	SECTOR DUMP ROUTINE ENTRY
21	51	737, 733	VERIFY AND PREPARE TO LOAD ROUTINE ENTRY
22	52	737, 734	MEMORY ERROR TEST
23	521	737, 734, 733	LOAD ROUTINE ENTRY
24	53	737, 735	MINOR LOOP, SWITCH SELECTOR AND REAL TIME COUNTER TESTS ENTRY
25	531	737, 735, 733	UNASSIGNED
30	540	737, 736	PREPARE TO LAUNCH SIM. FLT. WITH A PLATFORM

ATTACHMENT "A"

REVISIONS			
SYM	DESCRIPTION	DATE	APPROVAL

35	5431	737, 736, 735, 733	COMMAND RECEIVER LINKAGE ROUTINE
40	60	738	POWER UP AND INITIALIZE
52	642	738, 736, 734	UNASSIGNED
53	6421	738, 736, 734, 733	(MINOR LOOP, SWITCH SELECTOR, REAL TIME COUNTER TEST ROUTINE)
54	643	738, 736, 735	(LOAD ROUTINE)
55	6431	738, 736, 735, 733	(MEMORY ERROR TEST ROUTINE)
57	64321	738, 736, 735, 734, 733	(SECTOR DUMP ROUTINE)
60	650	738, 737	(EXERCISE ATTITUDE COMMAND ROUTINE MODE 2)
62	652	738, 737, 734	(SWITCH SELECTOR ROUTINE)
63	6521	738, 737, 734, 733	(COMPUTER INTERFACE UNIT READ ROUTINE)
64	653	738, 737, 735	(EXERCISE ATTITUDE COMMAND ROUTINE MODE 1)
65	6531	738, 737, 735, 733	(PREPARE TO LAUNCH ROUTINE)
67	65321	738, 737, 735, 734, 733	(LADDER ERROR TEST ROUTINE)
71	6541	738, 737, 736, 733	(G & C STEERING TEST ROUTINE)
72	6542	738, 737, 736, 734	(DISCRETE OUTPUT ROUTINE)
73	65421	738, 737, 736, 734, 733	(DISCRETE INPUT ROUTINE)
74	6543	738, 737, 736, 735	(GIMBAL ANGLE MONITOR ROUTINE)
75	65431	738, 737, 736, 735, 733	(ACCELEROMETER PULSE COUNT ROUTINE)
76	65432	738, 737, 736, 735, 734	(PROGRAM CONTINUE ROUTINE)
(26)	532	737, 735, 734	FORCED BEGIN AND INITIALIZE ROUTINE ENTRY
(27)	5321	737, 735, 734, 733	SYNC RESET SUBROUTINE OVERTIME MESSAGE
(34)	543	737, 736, 735	EXERCISE ATTITUDE COMMAND ROUTINE ERROR --- INITIAL CONVERTER NOT STILL SELECTED
36	5432	737, 736, 735, 734	PREPARE TO LAUNCH --- COMMAND TO COMPARE GIVEN AZIMUTH TO STORED AZIMUTH VALUE
(37)	54321	737, 736, 735, 734, 733	RESERVED FOR SIM. FLIGHT

ATTACHMENT "A"

REVISIONS			
SYM	DESCRIPTION	DATE	APPROVAL

(42)	62	738, 734	RESERVED FOR FLIGHT
(43)	621	738, 734, 733	EXERCISE ATTITUDE COMMAND TEST MAXIMUM ATTAINED ON ONE OR MORE AXES
(45)	631	738, 735, 733	READ INPUT DATA SUBROUTINE OVERTIME MESSAGE
(46)	632	738, 735, 734	EXERCISE ATTITUDE COMMAND TEST DRIVING TOWARD NULL
(47)	6321	738, 735, 734, 733	ERROR MONITOR SUBROUTINE ENTRY
(50)	640	738, 736	ABORT TEST STATUS CODE
(51)	641	738, 736, 733	FORCED BEGIN ROUTINE ERROR --- EMR NON-ZERO
(56)	6432	738, 736, 735, 734	VERIFY AND PREPARE TO LOAD ROUTINE TRYING TO LOAD WITHOUT FIRST LOADING PREVIOUS INFORMATION (IF ANY)
(66)	6532	738, 737, 735, 734	ISSUED ON COMPLETION OF REPEATABLE FLT. SIM. RUN
(70)	6540	738, 737, 736	RESERVE FOR SIM. FLIGHT
77	654321	738, 737, 736, 735, 734, 733	FORCES THE EMR SUBROUTINE TO RETURN TO FORCED BEGIN FBDA
31	541	737, 736, 733	UNASSIGNED
32	737, 736, 734		LVDC TM TEST
33	5421	737, 736, 734, 733	UNASSIGNED
41	61	738, 733	UNASSIGNED
44	63	738, 735	UNASSIGNED
61	651	738, 737, 733	UNASSIGNED

MSFC FORM 422 (VERTICAL) (AUGUST 1960)

NOTICE — When Government drawings, specifications, or other data are used for any purpose other than in connection with a definitely related Government procurement operation, the United States Government thereby incurs no responsibility nor obligation whatsoever; and the fact that the Government may have formulated, furnished, or in any way supplied the said drawings specifications or other data is not to be regarded by implication or otherwise as in any manner licensing the holder or any other person or corporation, or conveying any rights or permission to manufacture, use, or sell any patented invention that may in any way be related thereto.

APPLICATION		PART No.	M F	REVISIONS			
NEXT ASSY	USED ON			SYM	DESCRIPTION	DATE	APPROVAL

AS-503

PROGRAM VERIFICATION

PREPARE TO LAUNCH (FT37)

73V1426

UNLESS OTHERWISE SPECIFIED DIMENSIONS ARE IN INCHES TOLERANCES ON: FRACTIONS DECIMALS ANGLES	ORIGINAL DATE OF DRAWING 7/22/68 DRAFTSMAN / CHECKER TRACER / CHECKER ENGINEER / ENGINEER	PREPARE TO LAUNCH SIMULATED FLIGHT (FT37)	GEORGE C. MARSHALL SPACE FLIGHT CENTER NATIONAL AERONAUTICS AND SPACE ADMINISTRATION HUNTSVILLE, ALABAMA
MATERIAL	SUBMITTED for Don J Ward E. BRYAN		
HEAT TREATMENT			
FINAL PROTECTIVE FINISH	APPROVED R. A. Drakey R. A. DRAKEY	SCALE UNIT WT	DWG SIZE A 73V1426 SHEET 1 OF 8

REVISIONS			
SYM	DESCRIPTION	DATE	APPROVAL

PREPARE TO LAUNCH SIMULATED FLIGHT (FT37)

1.0 SCOPE

THIS PROCEDURE WILL VERIFY THE GUIDANCE SYSTEM TEST PROGRAM "PREPARE TO LAUNCH SIMULATED FLIGHT (FT37)".

2.0 APPLICABLE GOVERNMENT FURNISHED DOCUMENTS

DRAWINGS AESS LVDA INTERFACE	50M36401
AESS INSTRUMENT UNIT ESE SATURN V	40M14490
INSTRUMENT UNIT ELECTRICAL SCHEMATICS	40M33221
DOCUMENTS IP & C S-IU-503	6009048
TEST PROGRAM SPECIFICATIONS SATURN V LAUNCH COMPUTER COMPLEX AS-503	67-F11-0008
PRELAUNCH CHECKOUT SPECIFICATIONS AND CRITERIA FOR S-IU-503	67-257-0004
OPERATOR REFERENCE MANUAL FOR SLCC PROGRAMMING SYSTEM	68-F11-0003

3.0 GENERAL NOTES

FT37 WILL BE ENTERED FROM KEYBOARD IN ACCORDANCE WITH THE IBM OPERATOR REFERENCE MANUAL. ALL PROGRAM OPTIONS WILL BE EXERCISED AND HARDWARE RESPONSE TO COMPUTER STIMULI WILL BE MONITORED.

4.0 PREREQUISITES FOR OPTION 2 G&C SIMULATED FLIGHT ONLY.

4.1 DISCONNECT J4, J6, AND J9 FROM THE EDS DISTRIBUTOR (602A5).

4.2 DISCONNECT J10 FROM THE CONTROL DISTRIBUTOR (603A2).

4.3 INSTALL JUMPERS BELOW FOR PLUGS CONNECTED INDICATION:

202-620A1 DISTRIBUTOR
J24/D ----------J24/E
J24/G ----------J24/H

REVISIONS			
SYM	DESCRIPTION	DATE	APPROVAL

PREPARE TO LAUNCH - SIMULATED FLIGHT (FT37)

4.4 POWER UP THE INSTRUMENT UNIT PER BOEING PROCEDURE.

4.5 REMOVE THE JUMPERS INSTALLED ABOVE IN THE 202-620A1 DISTRIBUTOR.

4.6 PLACE THE EDS MODE SWITCH IN THE "TEST" POSITION.

4.7 PLACE THE LVDA/ESE SWITCH IN THE "LVDA" POSITION.

4.8 REQUEST S-IC, S-II, AND S-IVB TO POWER UP TO ENABLE ALL STAGE SWITCH SELECTORS.

4.9 REQUEST S-IVB TO TURN OFF SEQUENCER POWER.

4.10 POWER UP THE LVDC/LVDA USING FT04-$P 000000.

4.11 ISSUE THE FOLLOWING MDO'S "ON".

0898 - DIN 5-S-IVB ENGINE OUT A SIM
0893 - DIN 10-S-II/S-IVB SEP. SIM
0899 - DIN 11- S-IC ENGINE OUT "B" SIMULATE
0892 - DIN 12-S-IC/S-II SEP. SIM
0894 - DIN 13-S-II INBOARD ENGINE OUT SIM.
1034 - DIN 15-S-II AFT INTERSTAGE SEP.
0891 - DIN 21-S-II OUTBOARD ENGINE OUT.
0885 - INT 4-S-IVB ENGINE OUT B SIM.

4.12 AT THE SANDERS DISPLAY CONSOLE, USING CARD KEY #7, ENTER LVDC DISCRETE INPUT TEST (FT25) MANUAL OPTION AND VERIFY THAT THE ABOVE MDO'S WERE ISSUED "ON".

4.13 AT THE SANDERS DISPLAY CONSOLE, ENTER SIMULATED PLUS TIME TABLE GENERATOR (FU01) IN ACCORDANCE WITH THE IBM OPERATOR REFERENCE MANUAL.

4.14 UPON COMPLETION OF G&C SIMULATED FLIGHT, POWER DOWN THE LVDC/LVDA USING FT04 OPTION 1.

4.15 POWER DOWN THE INSTRUMENT UNIT PER BOEING PROCEDURE.

4.16 RECONNECT J4, J6, AND J9 OF THE EDS DISTRIBUTOR (603A2).

4.17 RECONNECT J10 OF THE CONTROL DISTRIBUTOR (603A2).

5.0 PROCEDURE

5.1 VERIFY THAT THE INSTRUMENT UNIT IS POWERED DOWN.

5.2 VERIFY THAT LVDA (603A29) AND LVDC (603A28) STAGE INTERCONNECTING CABLES ARE INSTALLED ACCORDING TO IU CID (40M33080).

REVISIONS			
SYM	DESCRIPTION	DATE	APPROVAL

PREPARE TO LAUNCH - SIMULATED FLIGHT (FT37)

5.3 VERIFY THAT POWER SWITCH (S1) ON THE GCP (601-608A13) IS IN THE "OFF" POSITION.

5.4 NOTIFY POWER ROOM TO CLOSE THE IU CIRCUIT BREAKERS AND PLACE THE +6D100 AND +6D200 BACKUP BATTERIES ON LINE.

5.5 START THE +6D100 AND +6D200 POWER SUPPLIES.

5.6 PLACE THE +6D100 AND +6D200 OUTPUT POWER SWITCHES TO THE "ON" POSITION.

5.7 PLACE THE +6D100 AND +6D200 BACKUP BATTERY ENABLE SWITCHES TO THE "ON" POSITION AND VERIFY BACKUP BATTERY ENABLED INDICATIONS ON EVENTS DISPLAY PANEL.

5.8 POWER THE INSTRUMENT UNIT UNTIL THE "GROUND POWER INDICATION IS RECEIVED.

5.9 VERIFY THAT GSCU IS ON.

5.10 ADJUST +6D100 AND +6D200 REMOTE VOLTAGE METERS TO READ 28V(+2,-0) VIA THE VOLTAGE INCREASE/DECREASE SWITCHES.

5.11 VERIFY ESE/LVDA SWITCH IN ESE POSITION.

5.12 ISSUE A SWITCH SELECTOR REGISTER TEST FOR THE IU AND VERIFY THE REGISTER TEST INDICATION.

5.13 REQUEST MLF COMPUTER ENGINEERING TO VERIFY THAT COMPUTER PERIPHERAL EQUIPMENT IS READY TO SUPPORT.

5.14 REQUEST TEST CONDUCTOR TO VERIFY THAT LCC & MLF DDAS IS IN "RECEIVE".

5.15 REQUEST THAT S-IVB STAGE APPLY POWER UNTIL "READY FOR POWER TRANSFER" INDICATION IS RECEIVED.

5.16 PLACE "POWER ON" SWITCH (S1) AT GCP 601-608A13 TO AUTO POSITION.

5.17 ENTER FT04, POWER ON OPTION, IN ACCORDANCE WITH THE IBM OPERATOR REFERENCE MANUAL.

5.18 AT SANDERS DISPLAY CONSOLE NO. 2 KEY 9 ENTER PREPARE TO LAUNCH PROGRAM (FT37) IN ACCORDANCE WITH THE IBM OPERATOR REFERENCE MANUAL. EXECUTE AND VERIFY PREPARE TO LAUNCH TEST PROGRAM.

NOTE: a. OPTIONS 3 REQUIRES ST-124M PLATFORM POWER ON.
b. OPTION 3 AUTOMATICALLY CALLS SIMULATED FLIGHT MONITOR PROGRAM (FT27) AND AUTOMATICALLY TERMINATES.

REVISIONS			
SYM	DESCRIPTION	DATE	APPROVAL

PREPARE TO LAUNCH - SIMULATED FLIGHT (FT37)

5.19 FT23 (SECTOR SUM CHECK) SHOULD BE RUN AFTER A REPEATABLE SIM FLIGHT (OPTION 1). NOTE ANY DIFFERENCES BETWEEN EXPECTED AND RECEIVED DATA.

5.20 COMPARE DATA RECEIVED FROM OPTIONS 2 AND 3 OF FT37 WITH THE 503 FLIGHT SEQUENCE DOCUMENT AND REPORT ANY ANOMALIES.

REVISIONS			
SYM	DESCRIPTION	DATE	APPROVAL

ATTACHMENT "A"

LVDA	MODE	MDI	SOURCE STATEMENT
00	00	NONE	MODE SORT ROUTINE GROUND ENTRY
01	01	733	(PROGRAM CONTINUE ROUTINE)
02	02	734	ACCELEROMETER PULSE COUNT ROUTINE ENTRY
03	21	734, 733	GIMBAL ANGLE MONITOR ROUTINE ENTRY
04	03	735	DISCRETE INPUT ROUTINE ENTRY
05	31	735, 733	DISCRETE OUTPUT ROUTINE ENTRY
06	32	735, 734	G&C STEERING TEST ENTRY
07	321	735, 734, 733	DOM TEST ROUTINE ENTRY
10	40	736	LADDER ERROR TEST ROUTINE ENTRY
11	41	736, 733	PREPARE TO LAUNCH WITHOUT A PLATFORM
12	42	736, 734	PREPARE TO LAUNCH WITH A PLATFORM
13	421	736, 734, 733	EXERCISE ATTITUDE COMMAND ROUTINE MODE 1 ENTRY
14	43	736, 735	COMPUTER INTERFACE UNIT READ ROUTINE ENTRY
15	431	736, 735, 733	SWITCH SELECTOR ROUTINE ENTRY
16	432	736, 735, 734	SECTOR SUM CHECK ROUTINE ENTRY
17	4321	736, 735, 734, 733	EXERCISE ATTITUDE COMMAND ROUTINE MODE 2 ENTRY
20	50	737	SECTOR DUMP ROUTINE ENTRY
21	51	737, 733	VERIFY AND PREPARE TO LOAD ROUTINE ENTRY
22	52	737, 734	MEMORY ERROR TEST
23	521	737, 734, 733	LOAD ROUTINE ENTRY
24	53	737, 735	MINOR LOOP, SWITCH SELECTOR AND REAL TIME COUNTER TESTS ENTRY
25	531	737, 735, 733	UNASSIGNED

REVISIONS			
SYM	DESCRIPTION	DATE	APPROVAL

ATTACHMENT "A"

LVDA	MODE	MDI	SOURCE STATEMENT
30	540	737, 736	PREPARE TO LAUNCH SIM. FLT. WITH A PLATFORM
35	5431	737, 736, 735, 733	COMMAND RECEIVER LINKAGE ROUTINE
40	60	738	POWER UP AND INITIALIZE
52	642	738, 736, 734	UNASSIGNED
53	6421	738, 736, 734, 733	(MINOR LOOP, SWITCH SELECTOR, REAL TIME COUNTER TEST ROUTINE)
54	643	738, 736, 735	(LOAD ROUTINE)
55	6431	738, 736, 735, 733	(MEMORY ERROR TEST ROUTINE)
57	64321	738, 736, 735, 734, 733	(SECTOR DUMP ROUTINE)
60	650	738, 737	(EXERCISE ATTITUDE COMMAND ROUTINE MODE 2)
62	652	738, 737, 734	(SWITCH SELECTOR ROUTINE)
63	6521	738, 737, 734, 733	(COMPUTER INTERFACE UNIT READ ROUTINE)
64	653	738, 737, 735	(EXERCISE ATTITUDE COMMAND ROUTINE MODE 1)
65	6531	738, 737, 735, 733	(PREPARE TO LAUNCH ROUTINE)
67	65321	738, 737, 735, 734, 733	(LADDER ERROR TEST ROUTINE)
71	6541	738, 737, 736, 733	(G&C STEERING TEST ROUTINE)
72	6542	738, 737, 736, 734	(DISCRETE OUTPUT ROUTINE)
73	65421	738, 737, 736, 734, 733	(DISCRETE INPUT ROUTINE)
74	6543	738, 737, 736, 735	(GIMBAL ANGLE MONITOR ROUTINE)
75	65431	738, 737, 736, 735, 733	(ACCELEROMETER PULSE COUNT ROUTINE)
76	65432	738, 737, 736, 735, 734	(PROGRAM CONTINUE ROUTINE)
(26)	532	737, 735, 734	FORCED BEGIN AND INITIALIZE ROUTINE ENTRY
(27)	5321	737, 735, 734, 733	SYNC RESET SUBROUTINE OVERTIME MESSAGE

REVISIONS			
SYM	DESCRIPTION	DATE	APPROVAL

ATTACHMENT "A"

LVDA	MODE	MDI	SOURCE STATEMENT
(34)	543	737, 736, 735	EXERCISE ATTITUDE COMMAND ROUTINE ERROR --- INITIAL CONVERTER NOT STILL SELECTED.
36	5432	737, 736, 735, 734	PREPARE TO LAUNCH---COMMAND TO COMPARE GIVEN AZIMUTH TO STORED AZIMUTH VALVE.
(37)	54321	737, 736, 735, 734, 733	RESERVED FOR SIM. FLIGHT
(42)	62	738, 734	RESERVED FOR FLIGHT
(43)	621	738, 734, 733	EXERCISE ATTITUDE COMMAND TEST-MAXIMUM ATTAINED ON ONE OR MORE AXES
(45)	631	738, 735, 733	READ INPUT DATA SUBROUTINE OVERTIME MESSAGE
(46)	632	738, 735, 734	EXERCISE ATTITUDE COMMAND TEST DRIVING TOWARD NULL
(47)	6321	738, 735, 734, 733	ERROR MONITOR SUBROUTINE ENTRY
(50)	640	738, 736	ABORT TEST STATUS CODE
(51)	641	738, 736, 733	FORCED BEGIN ROUTINE ERROR---EMR NON-ZERO
(56)	6432	738, 736, 735, 734	VERIFY AND PREPARE TO LOAD ROUTINE TRYING TO LOAD WITHOUT FIRST LOADING PREVIOUS INFORMATION (IF ANY)
(66)	6532	738, 737, 735, 734	ISSUED ON COMPLETION OR REPEATABLE FLT. SIM. RUN
(70)	6540	738, 737, 736	RESERVE FOR SIM FLIGHT
77	654321	738, 737, 736, 735, 734 733	FORCES THE EMR SUBROUTINE TO RETURN TO FORCED BEGIN FBDA
31	541	737, 736, 733	UNASSIGNED
32	542	737, 736, 734	LVDC TM TEST
33	5421	737, 736, 734, 733	UNASSIGNED
41	61	738, 733	UNASSIGNED
44	63	738, 735	UNASSIGNED
61	651	738, 737, 733	UNASSIGNED

MSFC FORM 422 (VERTICAL) (AUGUST 1960)

NOTICE — When Government drawings, specifications, or other data are used for any purpose other than in connection with a definitely related Government procurement operation, the United States Government thereby incurs no responsibility nor obligation whatsoever; and the fact that the Government may have formulated, furnished, or in any way supplied the said drawings specifications or other data is not to be regarded by implication or otherwise as in any manner licensing the holder or any other person or corporation, or conveying any rights or permission to manufacture, use, or sell any patented invention that may in any way be related thereto.

APPLICATION		PART No.	M F	REVISIONS			
NEXT ASSY	USED ON			SYM	DESCRIPTION	DATE	APPROVAL

AS-503

PROGRAM VERIFICATION

ST-124M PLATFORM STATUS PROGRAM (GT17)

73V1503

UNLESS OTHERWISE SPECIFIED DIMENSIONS ARE IN INCHES TOLERANCES ON: FRACTIONS DECIMALS ANGLES	ORIGINAL DATE OF DRAWING 7/19/68 DRAFTSMAN / CHECKER TRACER / CHECKER ENGINEER / ENGINEER	ST-124M PLATFORM STATUS PROGRAM (GT17) AS-503	GEORGE C. MARSHALL SPACE FLIGHT CENTER NATIONAL AERONAUTICS AND SPACE ADMINISTRATION HUNTSVILLE, ALABAMA
MATERIAL	SUBMITTED E. N. Bryan E. N. BRYAN		
HEAT TREATMENT			
FINAL PROTECTIVE FINISH	APPROVED R. A. Drakey R. A. DRAKEY	SCALE UNIT WT	DWG SIZE A 73V1503 SHEET 1 OF 4

REVISIONS			
SYM	DESCRIPTION	DATE	APPROVAL

ST-124M PLATFORM STUTUS PROGRAM (GT17)

1.0 SCOPE

THIS PROCEDURE WILL VERIFY THE "ST-124M PLATFORM STATUS TEST PROGRAM (GT17)".

2.0 APPLICABLE GOVERNMENT FURNISHED DOCUMENTS

DRAWINGS AESS LVDA INTERFACE	50M36401
AESS INSTRUMENT UNIT ESE SATURN V	40M14490
INSTRUMENT UNIT ELECTRICAL SCHEMATICS	40M33221
DOCUMENTS IP & C S-IU-503	6009048
TEST PROGRAM SPECIFICATIONS SATURN V LAUNCH COMPUTER COMPLEX AS-503	67-F11-0008
PRELAUNCH CHECKOUT SPECIFICATIONS AND CRITERIA FOR S-IU-503	67-257-0004
OPERATOR REFERENCE MANUAL FOR SLCC PROGRAMMING SYSTEM	68-F11-0003

3.0 GENERAL NOTES

GT17 WILL BE ENTERED FROM KEYBOARD IN ACCORDANCE WITH THE IBM OPERATOR REFERENCE MANUAL. ALL PROGRAM OPTIONS WILL BE EXERCISED AND HARDWARE RESPONSE TO COMPUTER STIMULI WILL BE MONITORED.

4.0 PREREQUISITES

PLATFORM MUST BE POWERED UP AND NULLED OUT. "PLATFORM COLD" INDICATION SHOULD BE "OFF".

REVISIONS			
SYM	DESCRIPTION	DATE	APPROVAL

5.0 PROCEDURES

5.1 VERIFY ST-124M PLATFORM POWERED UP AND READY TO SUPPORT TEST.

5.2 AT SANDERS DISPLAY CONSOLE 2 KEY 6 ENTER ST-124M PLATFORM STATUS PROGRAM (GT17) IN ACCORDANCE WITH 3.0 OF SECTION 2 OF THE IBM USERS MANUAL. EXECUTE AND VERIFY ST-124M STATUS PROGRAM (GT17).

MONITOR THE FOLLOWING ON THE SANDERS DISPLAY.

SIGNAL	RANGE
Z SERVO LOOP	± 1.25 VDC
X SERVO LOOP	± 1.25 VDC
Y SERVO LOOP	± 1.25 VDC
Z ACCEL. SERVO LOOP	± 5.0 VDC
X ACCEL. SERVO LOOP	± 5.0 VDC
Y ACCEL. SERVO LOOP	± 5.0 VDC
PITCH DEMOD OUTPUT, FINE	± 3.0 DEG
YAW DEMOD OUTPUT, FINE	± 3.0 DEG
ROLL DEMOD OUTPUT, FINE	± 3.0
Z GYRO PICKUP	± 1 DEG
X GYRO PICKUP	± 1 DEG
Y GYRO PICKUP	± 1 DEG
Z ACC. PICKUP	± 4.5 VDC
X ACC. PICKUP	± 4.5 VDC
Y ACC. PICKUP	± 4.5 VDC
INTERNAL GIMBAL TEMP.	43 (± 3)
AIR BEAR. INLET TEMP.	15 (± 20, -5) °C
ELECTRONIC BOX TEMP.	30 (± 15) °C
250 VA INVERTER TEMP.	30 (± 15) °C
ACCEL. SIGNAL COND. TEMP.	20 (± 15) °C
SHROUD INLET COOLANT TEMP.	15.0 (±1.1)°C
SHROUD EXIT COOLANT TEMP.	70° F MAX
WATER/METH EXIT TEMP.	70° F MAX
GN_2 REGUL. INLET TEMP.	110° F MAX 15(-14, 10)°C
HEAT EXCH. GN_2 EXIT	15 (-14, -10) °C
REG. INLET GN_2 PRESS	* 750-800 PSIG
AIR BEAR. INLET PRESS	15.0 (± 0.5) PSID
INTERNAL AMB. PRESS.	18.5 (± 2) PSIA
ST-124M SHROUD INL. COOLANT FLOW RATE	0.1 - 0.5 GPM
SUMMATION GYRO CURRENT	3.9 (± 0.9) AMPS
SUMMATION ACCEL. CURRENT	1.05 (± 0.3) AMPS
4.8 KHZ PLAT EXCIT. VOLT.	10 (± 0.5) VAC
4.8 KHZ SERVO AMP SUPPLY VOLT.	10 (± 0.5) VAC
56 VDC SUPPLY VOLTAGE	56 (± 2.5) VDC
250 VA INVERTER VOLT. BC	26.5 (±1) VAC
400 HZ INVERTER FREQ. DEVIATION	0 (± 0.02) HZ

*SDBF ONLY

REVISIONS			
SYM	DESCRIPTION	DATE	APPROVAL

6.0 ERROR MESSAGE TEST

6.1 TURN HEATERS SWITCH "OFF" ON ST-124M CONTROL PANEL.

6.2 EXECUTE PROGRAM IN ACCORDANCE WITH 5.3.

ERROR MESSAGE " PLATFORM HEATERS OFF", SHOULD BE DISPLAYED ON SANDERS DISPLAY CONSOLE.

6.3 TERMINATE PROGRAM IN ACCORDANCE WITH 3.4 SECTION 2 OF THE IBM USERS MANUAL.

6.4 TURN HEATERS SWITCH "ON" AT THE ST-124M CONTROL PANEL.

MSFC FORM 422 (VERTICAL) (AUGUST 1960)

NOTICE — When Government drawings, specifications, or other data are used for any purpose other than in connection with a definitely related Government procurement operation, the United States Government thereby incurs no responsibility nor obligation whatsoever; and the fact that the Government may have formulated, furnished, or in any way supplied the said drawings specifications or other data is not to be regarded by implication or otherwise as in any manner licensing the holder or any other person or corporation, or conveying any rights or permission to manufacture, use, or sell any patented invention that may in any way be related thereto.

APPLICATION		PART No.	M F	REVISIONS			
NEXT ASSY	USED ON			SYM	DESCRIPTION	DATE	APPROVAL

AS-503

PROGRAM VERIFICATION

AZIMUTH LAYING PROGRAM (GT16)

73V1504

UNLESS OTHERWISE SPECIFIED DIMENSIONS ARE IN INCHES TOLERANCES ON: FRACTIONS DECIMALS ANGLES	ORIGINAL DATE OF DRAWING 7/19/68	AZIMUTH LAYING PROGRAM (GT16) AS-503	GEORGE C. MARSHALL SPACE FLIGHT CENTER NATIONAL AERONAUTICS AND SPACE ADMINISTRATION HUNTSVILLE, ALABAMA
MATERIAL	DRAFTSMAN / CHECKER TRACER / CHECKER ENGINEER / ENGINEER		
HEAT TREATMENT	SUBMITTED E. N. Bryan E. N. BRYAN		
FINAL PROTECTIVE FINISH	APPROVED R. A. Drakey R. A. DRAKEY	SCALE UNIT WT	DWG SIZE A 73V1504 SHEET 1 OF 4

REVISIONS			
SYM	DESCRIPTION	DATE	APPROVAL

ST-124 M AZIMUTH LAYING PROGRAM (GT16)

1.0 SCOPE

THIS PROCEDURE WILL VERIFY THE ST-124M SYSTEM TEST "ST-124M AZIMUTH LAYING PROGRAM (GT16)."

2.0 APPLICABLE GOVERNMENT FURNISHED DOCUMENTS

DRAWINGS AESS LVDA INTERFACE	50M36401
AESS INSTRUMENT UNIT ESE SATURN V	40M14490
INSTRUMENT UNIT ELECTRICAL SCHEMATICS	40M33221
DOCUMENTS IP & C S-IU-503	6009048
TEST PROGRAM SPECIFICATIONS SATURN V LAUNCH COMPUTER COMPLEX AS-503	67-F11-0008
PRELAUNCH CHECKOUT SPECIFICATIONS AND CRITERIA FOR S-IU-503	67-247-0004
OPERATOR REFERENCE MANUAL FOR SLCC PROGRAMMING SYSTEM	68-F11-0003

3.0 GENERAL NOTES

GT16 WILL BE ENTERED FROM KEYBOARD IN ACCORDANCE WITH THE IBM OPERATOR REFERENCE MANUAL. ALL PROGRAM OPTIONS WILL BE EXERCISED AND HARDWARE RESPONSE TO COMPUTER STIMULI WILL BE MONITORED.

4.0 PREREQUISITES

PLATFORM MUST BE POWERED UP WITH BOTH PRISMS ACQUIRED PRIOR TO EXECUTION OF GT16.

REVISIONS			
SYM	DESCRIPTION	DATE	APPROVAL

ST-124 M AZIMUTH LAYING PROGRAM (GT16)

5.0 PROCEDURES

5.1 TURN OFF DUAL PRISM ALIGNMENT ON THEODOLITE CONTROL PANEL.

5.2 VERIFY INITIATE SWITCH ON AZIMUTH REMOTE CONTROL IS IN "AUTO" POSITION.

5.3 VERIFY AZIMUTH ENCODER READOUT POWER IS "ON".

5.4 AT SANDERS DISPLAY CONSOLE 2 KEY 6 ENTER ST-124M AZIMUTH LAYING PROGRAM (GT16) IN ACCORDANCE WITH THE IBM OPERATOR REFERENCE MANUAL. EXECUTE AND VERIFY ST-124M AZIMUTH LAYING PROGRAM (GT16).

5.4.1 ENTER OPTION A IN ACCORDANCE WITH THE IBM OPERATOR REFERENCE MANUAL AND VERIFY ENCODER HAS BEEN POSITIONED TO THE OPTION ANGLE.

5.4.2 ENTER OPTION B IN ACCORDANCE WITH THE IBM OPERATOR REFERENCE MANUAL AND VERIFY ENCODER HAS BEEN POSITIONED TO THE OPTION ANGLE.

5.4.3 ENTER OPTION C IN ACCORDANCE WITH THE IBM OPERATOR REFERENCE MANUAL AND VERIFY AZIMUTH LAYING MONITOR PROGRAM HAS TERMINATED.

6.0 ERROR MESSAGE TEST

6.1 SET THE FOLLOWING SWITCHES TO THE "OFF" POSITION.

6.1.1 MOVING PRISM POWER

6.1.2 DUAL PRISM ALIGN

6.1.3 IDB POWER

6.1.4 CMR POWER

6.1.5 ALIGNMENT SYSTEM

6.1.6 AZIMUTH CONTROL

REVISIONS			
SYM	DESCRIPTION	DATE	APPROVAL

6.2 TURN INTEGRATOR CUTOUT "ON".

6.3 EXECUTE GT-16 IN ACCORDANCE WITH 5.4.

6.3.1 ERROR MESSAGE "ST-124M PLATFORM IS NOT READY" SHOULD BE DISPLAYED ON SANDERS DISPLAY CONSOLE.

6.4 SET THE FOLLOWING SWITCHES TO THE "ON" POSITION.

6.4.1 CMR POWER

6.4.2 IDB POWER

6.4.3 ALIGNMENT SYSTEM

6.5 EXECUTE USERS RESPONSE OPTION C (RETRY).

6.5.1 ERROR MESSAGE "AZIMUTH CONTROL POWER IS NOT ON" SHOULD BE DISPLAYED ON THE SANDERS DISPLAY CONSOLE.

6.6 TURN AZIMUTH CONTROL "ON".

6.7 EXECUTE USERS RESPONSE OPTION C (RETRY).

6.7.1 ERROR MESSAGE "INERTIAL PRISM NOT ACQUIRED IN 6 MINUTES" SHOULD BE DISPLAYED ON THE SANDERS DISPLAY CONSOLE.

6.8 TURN INTEGRATOR CUTOUT "OFF"

6.9 EXECUTE USERS RESPONSE OPTION C (RETRY).

6.9.1 ERROR MESSAGE "MOVING PRISM NOT ACQUIRED" SHOULD BE DISPLAYED ON SANDERS DISPLAY CONSOLE.

6.10 TURN MOVING PRISM POWER "ON."

6.11 TURN DUAL PRISM ALIGN TO "AUTO".

6.12 EXECUTE USERS RESPONSE OPTION C (RETRY).

6.12.1 AZIMUTH LAYING OPTIONS SHOULD BE DISPLAYED ON THE SANDERS DISPLAY CONSOLE.

6.13 TERMINATE GT-16 IN ACCORDANCE WITH THE IBM OPERATOR REFERENCE MANUAL.

NOTICE — When Government drawings, specifications, or other data are used for any purpose other than in connection with a definitely related Government procurement operation, the United States Government thereby incurs no responsibility nor obligation whatsoever; and the fact that the Government may have formulated, furnished, or in any way supplied the said drawings specifications or other data is not to be regarded by implication or otherwise as in any manner licensing the holder or any other person or corporation, or conveying any rights or permission to manufacture, use, or sell any patented invention that may in any way be related thereto.

APPLICATION		PART No.	M F	REVISIONS			
NEXT ASSY	USED ON			SYM	DESCRIPTION	DATE	APPROVAL

AS-503

PROGRAM VERIFICATION

AZIMUTH LAYING MONITOR PROGRAM (GE01)

73V1505

UNLESS OTHERWISE SPECIFIED DIMENSIONS ARE IN INCHES TOLERANCES ON: FRACTIONS DECIMALS ANGLES	ORIGINAL DATE OF DRAWING 7/19/68 DRAFTSMAN / CHECKER TRACER / CHECKER ENGINEER / ENGINEER	AZIMUTH LAYING MONITOR PROGRAM (GE01) AS-503	GEORGE C. MARSHALL SPACE FLIGHT CENTER NATIONAL AERONAUTICS AND SPACE ADMINISTRATION HUNTSVILLE, ALABAMA	
MATERIAL	SUBMITTED E. N. Bryan E. N. BRYAN			
HEAT TREATMENT				
FINAL PROTECTIVE FINISH	APPROVED R. A. Drakey R. A. DRAKEY	SCALE UNIT WT	DWG SIZE A	73V1505 SHEET 1 OF 3

REVISIONS			
SYM	DESCRIPTION	DATE	APPROVAL

ST-124M AZIMUTH LAYING MONITOR PROGRAM (GE01)

1.0 SCOPE

THIS PROCEDURE WILL VERIFY THE ST-124M PLATFORM SYSTEM TEST "ST-124M AZIMUTH LAYING MONITOR PROGRAM (GE01)".

2.0 APPLICABLE GOVERNMENT FURNISHED DOCUMENTS

DRAWINGS AESS LVDA INTERFACE	50M36401
AESS INSTRUMENT ESE SATURN V	40M14490
INSTRUMENT UNIT ELECTRICAL SCHEMATICS	40M33221
DOCUMENTS IP & C S-IU-503	6009048
TEST PROGRAM SPECIFICATIONS SATURN V LAUNCH COMPUTER COMPLEX AS-503	67-F11-0008
PRELAUNCH CHECKOUT SPECIFICATIONS AND CRITERIA FOR S-IU-503	68-257-0004
OPERATOR REFERENCE MANUAL FOR SLCC PROGRAMMING SYSTEM	68-F11-0003

3.0 GENERAL NOTES

GE01 WILL BE ENTERED FROM KEYBOARD IN ACCORDANCE WITH THE IBM OPERATOR REFERENCE MANUAL. ALL PROGRAM OPTIONS WILL BE EXERCISED AND HARDWARE RESPONSE TO COMPUTER STIMULI WILL BE MONITORED.

4.0 PREREQUISITES

ST-124M AZIMUTH LAYING PROGRAM (GT16) MUST HAVE BEEN RUN TO CALL GE01.

5.0 PROCEDURES

5.1 NONE - PROGRAM (GE01) IS AN AUTOMATIC MONITOR PROGRAM.

6.0 ERROR MESSAGE TEST

6.1 NOTIFY IU STAGE TECHNICIAN TO MOMENTARILY INTERRUPT THE THEODOLITE BEAM.

WITHIN 30 SECONDS OF THEODOLITE BEAM INTERRUPTION, THE SANDERS DISPLAY CONSOLE SHOULD DISPLAY THE FOLLOWING ERROR MESSAGE:

REVISIONS			
SYM	DESCRIPTION	DATE	APPROVAL

6.0 ERROR MESSAGE TEST (Cont'd)

"MOVING PRISM HAS NOT BEEN CONTINUOUSLY ACQUIRED FOR THE PAST 30 SECONDS."

6.2 TURN INITIATE "ON" ON THE AZIMUTH REMOTE CONTROL.

6.3 MOMENTARILY TURN BIT 2^{18} "ON" ON THE AZIMUTH REMOTE CONTROL UNTIL THE ANGLE ON THE AZIMUTH ENCODER READOUT HAS INCREASED OR DECREASED BY MORE THAN 5 ARC SECONDS BUT LESS THAN 300 ARC SECONDS.

6.4 TURN INITIATE "OFF" ON THE AZIMUTH REMOTE CONTROL.

ERROR MESSAGE "AZIMUTH ENCODER BEING REPOSITIONED TO FIRING AZIMUTH, IT HAD DRIFTED MORE THAN 5 ARC SECONDS", SHOULD BE DISPLAYED ON THE SANDERS DISPLAY CONSOLE.

6.5 TURN INITIATE "ON" ON THE AZIMUTH REMOTE CONTROL.

6.6 MOMENTARILY TURN BIT 2^{18} "ON" ON THE AZIMUTH REMOTE CONTROL UNTIL THE ANGLE ON THE AZIMUTH ENCODER READOUT HAS INCREASED OR DECREASED BY MORE THAN 300 ARC SECONDS.

6.7 TURN INITIATE "OFF" ON THE AZIMUTH REMOTE CONTROL.

ERROR MESSAGE, "FIRING AZIMUTH AND THE AZIMUTH ENCODER DIFFER BY MORE THAN 300 ARC SECONDS. TO REPOSITION THE AZIMUTH ENCODER, RUN THE AZIMUTH LAYING PROGRAM", SHOULD BE DISPLAYED ON SANDERS DISPLAY CONSOLE.

6.8 TERMININATE AZIMUTH LAYING PROGRAM (GT16) IN ACCORDANCE WITH THE IBM OPERATOR REFERENCE MANUAL.

REVISIONS			
SYM	DESCRIPTION	DATE	APPROVAL

This ATOLL Program (NA03) has been deleted until information is made available indicating what new ATOLL Program will be used as a replacement.

MSFC FORM 422 (VERTICAL) (AUGUST 1960)

NOTICE — When Government drawings, specifications, or other data are used for any purpose other than in connection with a definitely related Government procurement operation, the United States Government thereby incurs no responsibility nor obligation whatsoever; and the fact that the Government may have formulated, furnished, or in any way supplied the said drawings specifications or other data is not to be regarded by implication or otherwise as in any manner licensing the holder or any other person or corporation, or conveying any rights or permission to manufacture, use, or sell any patented invention that may in any way be related thereto.

APPLICATION		PART No.	M F	REVISIONS			
NEXT ASSY	USED ON			SYM	DESCRIPTION	DATE	APPROVAL

AS-503

VERIFICATION PROCEDURE

S-IC PRESSURE SWITCH FUNCTIONAL (NT07)

73V1603

UNLESS OTHERWISE SPECIFIED DIMENSIONS ARE IN INCHES TOLERANCES ON: FRACTIONS DECIMALS ANGLES	ORIGINAL DATE OF DRAWING 7/22/68 DRAFTSMAN / CHECKER TRACER / CHECKER ENGINEER / ENGINEER	S-IC PRESSURE SWITCH FUNCTIONAL (NT07) AS-503	GEORGE C. MARSHALL SPACE FLIGHT CENTER NATIONAL AERONAUTICS AND SPACE ADMINISTRATION HUNTSVILLE, ALABAMA	
MATERIAL	SUBMITTED G. N. COKER			
HEAT TREATMENT	APPROVED H. B. HARRISON	SCALE	DWG SIZE A	73V1603
FINAL PROTECTIVE FINISH		UNIT WT		SHEET 1 OF 7

REVISIONS			
SYM	DESCRIPTION	DATE	APPROVAL

1.0 SCOPE

THE S-IC PRESSURE SWITCH MONITOR TEST PROGRAM SHALL DETERMINE THE PICK-UP AND DROP-OUT PRESSURE OF THE S-IC CALIPS SWITCHES ASSOCIATED WITH THE LOX, FUEL AND ENGINE THRUST PRESSURE SYSTEMS. A PRELIMINARY SYSTEM PRESSURE LEAK CHECK OPTION SHALL BE INCLUDED TO INSURE THAT THE TEST EQUIPMENT HAS NO PRESSURE LOSSES.

2.0 APPLICABLE GOVERNMENT FURNISHED DOCUMENTS

AESS S-IC ESE SATURN V	40M10616
AESS S-IC STAGE SIMULATOR	40M34240
AESS S-IC MSE SIMULATOR	40M13442
OPERATOR REFERENCE MANUAL FOR SLCC PROGRAMMING SYSTEM SATURN V	IBM NO. 68-F11-0003
SPECIFICATION FOR THE TEST PROGRAMS FOR THE SATURN V LAUNCH COMPUTER COMPLEX	

3.0 GENERAL NOTES

NT07 WILL BE ENTERED FROM KEY BOARD IN ACCORDANCE WITH THE OPERATOR REFERENCE MANUAL. ALL PROGRAM OPTIONS WILL BE EXERCISED AND HARDWARE RESPONSES WILL BE MONITORED.

4.0 PREREQUISITES

4.1 SYSTEM WILL BE IN THE MAB MODE.

4.2 SYSTEM WILL BE POWERED UP.

4.3 PRIOR TO THE PERFORMANCE OF THIS PROCEDURE IN THE MAB MODE THE TEST CONDUCTOR SHOULD BE ADVISED THAT THE MAB WILL BE PRESSURIZED. THE TEST ENGINEER SHOULD VERIFY THAT ALL SAFETY INDICATIONS AND PROCEDURES ARE OBSERVED.

4.4 THE FOLLOWING SETUP MAY BE USED TO PROVIDE A RAPID VENT OF THE CALIPS SYSTEM WHEN IN THE MAB CONFIGURATION.

a. INSTALL THE FOLLOWING FUSED SWITCH JUMPERS IN THE B202-120A1 PATCHBOARD:

SYSTEM	JUMPER	ESE SH
LOX	J16/U+ - J16/V+	281
FUEL	J33/U+ - J33/V+	286
THRUST OK	J09/M+ - J09/N+	298

b. VERIFY THAT SWITCH IS OPEN FOR ALL SYSTEMS PRIOR TO EACH TEST.

REVISIONS			
SYM	DESCRIPTION	DATE	APPROVAL

4.0 Continued

4.5 VERIFY THAT CARD KEY NO. 9 OR MASTER CARD KEY NO. 1 IS INSTALLED IN SANDERS DISPLAY CONSOLE.

5.0 PROCEDURE

5.1 SETUP FOR MAB MODE

a. VERIFY THAT THE MAB HANDVALVE SETTINGS HAVE BEEN SET UP FOR NT07 CALIPS TEST.

b. ON THE S-IC STAGE SIMULATOR PANEL B6A1, VERIFY THAT SWITCHES S3, S6, S9, S10, S11, S16, S17, S18, S19, S20, S25, S26, S27, S28 AND S29 ARE IN THE DOWN POSITION.

c. ON THE NETWORKS PANEL, PLACE SWITCHES S10 AND S14 TO THE ON POSITION.

d. ON THE S-IC GROUND PNEUMATICS PANEL, PLACE SWITCHES S1 AND S7 TO THE CLOSE POSITION.

e. OPEN STUB-UP VALVE IN MAB AREA.

f. ON THE S-IC GROUND PNEUMATICS PANEL, PLACE SWITCH S7 TO THE OPEN POSITION AND ALLOW GN PRESSURE TO STABILIZE AT APPROXIMATELY 3500 PSI ON M3 OF GROUND PNEUMATICS PANEL.

g. ON THE GROUND PNEUMATICS PANEL, PLACE SWITCHES S4 AND S10 TO THE OPEN POSITION.

h. ON THE CONTROL AND PURGE PANEL, PLACE SWITCHES S1 AND S4 TO THE OPEN POSITION.

5.2 OPERATION (APPLICABLE TO MAB CONFIGURATION)

a. CALL UP THE PROGRAM INTO HIGH SPEED MEMORY BY ENTERING $TPRQNT07 AT THE DISPLAY CONSOLE.

b. EXECUTE THE PROGRAM BY ENTERING $PX AT THE DISPLAY CONSOLE.

c. THE PROGRAM WILL SET INITIAL CONDITIONS AND ENTER THE OPTION OF PERFORMING A LEAK CHECK OR A CALIPS SWITCH TEST.

d. S-IC TEST ENGINEER WILL OPERATE CALIPS TEST SWITCHES S19 ON FUEL PANEL, S24 ON LOX SYSTEM PANEL AND S12 ON CUTOFF SENSOR PANEL INDIVIDUALLY TO "ON" POSITION AS DESIRED WHEN REQUESTED BY THE PROGRAM.

e. EXECUTE LEAK CHECK OPTION BY ENTERING $PAB AT THE DISPLAY CONSOLE.

REVISIONS			
SYM	DESCRIPTION	DATE	APPROVAL

f. LEAK CHECK DATA OR ERROR MESSAGES PER SECTIONS 10A AND 10B OF IBM OPERATOR REFERENCE MANUAL WILL BE DISPLAYED.

AFTER LEAK CHECK DATA DISPLAY HAS TERMINATED, VENT SELECTED CALIPS CIRCUIT AS FOLLOWS:

1. INSURE TEST SWITCH FOR SYSTEM BEING TESTED IN AUTO POSITION.
2. CLOSE SWITCH ON APPROPRIATE FUSED JUMPER PER STEP 4.4.
3. OPEN SWITCH ON FUSED JUMPER.

g. COMPLETION OF LEAK TEST WILL BE DISPLAYED AND THE PROGRAM WILL RETURN TO THE STARTING TEST OPTION (PARAGRAPH 5.2, STEP C).

h. REQUEST CALIPS SWITCH TEST OPTION BY ENTERING $PAC AT THE DISPLAY CONSOLE.

i. CALIPS SWITCH TEST PRESSURE WILL BE DISPLAYED AND UPDATED EVERY 10 SECONDS UNTIL ALL PRESSURE SWITCH ACTUATIONS AND DEACTUATIONS ARE COMPLETED.

j. AT END OF CALIPS SWITCH TEST OUTPUT DATA ON ACTUATION AND DEACTUATION PRESSURES OF INDIVIDUAL PRESSURE SWITCHES WILL BE DISPLAYED AND THE PROGRAM WILL RETURN TO THE STARTING TEST OPTION (PARAGRAPH 5.2, STEP c).

k. REPEAT PARAGRAPH 5.2, STEP d THROUGH j FOR PERFORMING LEAK CHECKS AND CALIPS SWITCH TESTS ON THE REMAINING CALIPS TEST SWITCHES ON THE S-IC CONSOLE PANELS AS REQUESTED BY THE PROGRAM.

l. TERMINATE THE PROGRAM BY ENTERING $PAA OR $TERMNT07 AT THE DISPLAY CONSOLE.

m. THE FOLLOWING DISCRETES WILL BE ISSUED DURING THE PROGRAM EXECUTION.

MDI 0273 - FUEL TANK VENT OPEN
MDI 0270 - FUEL TANK PREPRESS OK
MDI 0271 - FUEL FLIGHT PRESS OK
MDI 2034 - LOX TANK FLT. VENT 2 OPEN
MDI 0396 - LOX VENT AND RELIEF OPEN
MDI 0015 - LOX PRE-PRESSURE OK
MDI 0601 - ENG. NO. 1 THRUST OK SW 1
MDI 0602 - ENG. NO. 1 THRUST OK SW 2
MDI 0603 - ENG. NO. 1 THRUST OK SW 3
MDI 0604 - ENG. NO. 2 THRUST OK SW 1
MDI 0605 - ENG. NO. 2 THRUST OK SW 2
MDI 0606 - ENG. NO. 2 THRUST OK SW 3
MDI 0607 - ENG. NO. 3 THRUST OK SW 1
MDI 0608 - ENG. NO. 3 THRUST OK SW 2

REVISIONS			
SYM	DESCRIPTION	DATE	APP

m. Continued

MDI 0609 - ENG. NO. 3 THRUST OK SW 3
MDI 0610 - ENG. NO. 4 THRUST OK SW 1
MDI 0611 - ENG. NO. 4 THRUST OK SW 2
MDI 0612 - ENG. NO. 4 THRUST OK SW 3
MDI 0613 - ENG. NO. 5 THRUST OK SW 1
MDI 0614 - ENG. NO. 5 THRUST OK SW 2
MDI 0615 - ENG. NO. 5 THRUST OK SW 3
MDI 2074 - LOX TANK CALIPS LINE OVERPRESSURE
MDI 2075 - LOX TANK CALIPS LINE PRES OK
MDI 2076 - FUEL TANK CALIPS LINE PRES OK
MDI 2077 - FUEL TANK CALIPS LINE OVERPRESSURE
MDI 2078 - THRUST OK CALIPS LINE PRES OK
MDI 2079 - THRUST OK CALIPS LINE OVERPRESSURE
MDO 1404 - TEST FUEL CALIPS SWITCHES
MDO 1401 - TEST LOX CALIPS SWITCHES
MDO 1410 - TEST THRUST OK CALIPS SWITCHES
MDO 0711 - S-IC CALIPS ENABLE
MDO 0712 - LEAK CHECK

5.3 POST OPERATION FOR MAB MODE

a. CLOSE THE STUB-UP VALVE IN THE MAB AREA.

b. ON THE GROUND PNEUMATICS PANEL PLACE SWITCH S8 TO THE "OPEN" POSITION.

c. ON THE CONTROL AND PURGE PANEL PLACE SWITCH S3 TO THE "OPEN" POSITION.

d. ON THE GROUND PNEUMATICS PANEL PLACE SWITCHES S5 AND S11 TO THE "OPEN" POSITION.

e. OPEN ANY REMAINING APPROPRIATE PRESSURE VENT VALVES. USE LOX AND FUEL CALIPS SWITCHES TO VENT PCR 1 AND PCR 2.

f. IF, AFTER NT07, THERE IS NOT TIME TO VENT THE SYSTEM PRIOR TO CHANGING CONFIGURATION, CLOSE THE MAB STUB-UP VALVE, POWER DOWN, CHANGE CONFIGURATION, AND VENT THE SYSTEM FROM THE MOC.

g. ON THE GROUND PNEUMATIC PANEL PLACE SWITCHES S11, S5, S10, S4, S8, S7 AND S1 TO "AUTO" POSITION IN THE SEQUENCE GIVEN.

h. ON THE CONTROL AND PURGE PANEL PLACE SWITCHES S3, S4, AND S1 TO THE "AUTO" POSITION.

i. RESTORE ALL HANDVALVES IN THE MAB EQUIPMENT TO THEIR ORIGINAL CONFIGURATION PRIOR TO THE TEST PROGRAM.

j. ON NETWORKS PANEL PLACE SWITCHES S10 AND S14 TO "AUTO" POSITION.

REVISIONS			
SYM	DESCRIPTION	DATE	APPR

6.0 ERROR MESSAGES

6.1 VERIFY THAT THE TEST PROGRAM HAS BEEN TERMINATED OR TERMINATE BY ENTERING $PAA AT THE DISPLAY CONSOLE.

6.2 CLOSE THE MAB STUB-UP VALVE.

6.3 POWER DOWN THE S-IC STAGE AND ESE.

6.4 DISCONNECT THE CABLE FROM J46 OF B202-120A1 PATCH DISTRIBUTOR IN THE MLF AND CONNECT TO A BREAKOUT BOX.

6.5 CONNECT A TEST CABLE BETWEEN THE BREAKOUT BOX AND J46 OF THE B202-120A1 PATCH DISTRIBUTOR. INSURE THAT ALL JUMPER BARS ARE INSTALLED FROM PIN TO PIN ON THE BREAKOUT BOX.

6.6 POWER UP THE S-IC STAGE AND ESE.

6.7 OPEN THE MAB STUB-UP VALVE.

6.8 REMOVE THE JUMPER BAR FROM PINS B OF THE BREAKOUT BOX THAT WAS INSTALLED BY STEPS 6.4 AND 6.5. (THIS DISABLES MDO 0711, CALIPS TEST ENABLE).

6.9 CALL UP AND EXECUTE THE PROGRAM WITH LEAK CHECK OPTION PER STEPS 5.2, a THROUGH 5.2, e.

6.10 THE FOLLOWING MESSAGE WILL BE DISPLAYED:

S-IC CALIPS ENABLE NOT IN ON POSITION
CAN NOT PERFORM SYSTEM LEAK CHECK

ENTER $PA A TO TERMINATE PROGRAM
ENTER $PA B TO REENTER TEST OPTION
ENTER $PA C TO RETEST CALIPS ENABLE

6.11 REINSTALL THE JUMPER BAR TO PINS B OF THE BREAKOUT BOX THAT WAS REMOVED IN STEP 6.8.

6.12 ENTER $PA C AND THE PROGRAM WILL COMPLETE EXECUTION OF LEAK CHECK.

6.13 REMOVE THE JUMPER BAR FROM PINS Y+ OF THE BREAKOUT BOX. (THIS DISABLES MDO 0712, CALIPS LEAK TEST ENABLE.)

6.14 REQUEST LEAK CHECK OPTION PER STEPS 5.2, d AND 5.2, e.

6.15 THE CALIPS SYSTEM SELECTED WILL COMPLETE A CALIPS TEST INSTEAD OF A LEAK CHECK AND THE FOLLOWING MESSAGE WILL BE DISPLAYED.

REVISIONS			
SYM	DESCRIPTION	DATE	APPROVED

6.15 Continued

MDO 712 COULD NOT BE ISSUED TO BEGIN LEAK
ENTER $PA A TO TERMINATE PROGRAM
ENTER $PA B TO RESTART PROGRAM
ENTER $PA C TO RETEST FOR MDO 712

6.16 REINSTALL THE JUMPER BAR TO PINS Y+ OF THE BREAKOUT BOX.

6.17 ENTER $PA B TO RESTART THE PROGRAM AND ACCOMPLISH A LEAK CHECK.

6.18 REQUEST LEAK CHECK OPTION PER STEPS 5.2, d AND 5.2, e. WHEN LEAK CHECK IS STARTED, INSTALL A FUSED JUMPER B202-120A1 PATCH DISTRIBUTOR BETWEEN TEST POINTS J3/S AND J47/Y+.

6.19 THE FOLLOWING ERROR MESSAGE WILL BE DISPLAYED WHEN LEAK CHECK IS COMPLETED.

MDO 712 COULD NOT BE ISSUED OFF TO TERMINATE LEAK CHECK
ENTER $PA A TO TERMINATE
ENTER $PA B TO RESTART PROGRAM
ENTER $PA C TO RETEST FOR MDO 712

6.20 REMOVE THE JUMPER THAT WAS INSTALLED IN STEP 6.18.

6.21 ENTER $PAC TO RETEST FOR MDO 712. THE PROGRAM WILL COMPLETE LEAK CHECK.

6.22 REMOVE THE JUMPER BAR FROM PINS B OF THE BREAKOUT BOX.

6.23 REQUEST CALIPS TEST OPTION OF THE PROGRAM PER STEP 5.2, h.

6.24 THE FOLLOWING ERROR MESSAGE WILL BE DISPLAYED:

S-IC CALIPS ENABLE NOT IN ON POSITION
CANNOT PERFORM CALIPS SWITCH TEST

ENTER $PA A TO TERMINATE PROGRAM
ENTER $PA B TO REENTER TEST OPTION
ENTER $PA C TO RETEST CALIPS ENABLE

6.25 REINSTALL THE JUMPER BAR TO PINS B OF THE BREAKOUT BOX.

6.26 ENTER $PA C TO RETEST CALIPS ENABLE. THE CALIPS TEST WILL COMPLETE EXECUTION.

6.27 ENTER $PA A TO TERMINATE THE TEST PROGRAM.

6.28 ACCOMPLISH SHUT DOWN PER STEPS 5.3 OF THE PROCEDURE.

6.29 POWER DOWN THE S-IC STAGE AND ESE.

6.30 REMOVE THE BREAKOUT BOX AND RECONNECT THE CABLE TO J46 OF B202-120A1 PATCH DISTRIBUTOR.

NOTICE — When Government drawings, specifications, or other data are used for any purpose other than in connection with a definitely related Government procurement operation, the United States Government thereby incurs no responsibility nor obligation whatsoever; and the fact that the Government may have formulated, furnished, or in any way supplied the said drawings specifications or other data is not to be regarded by implication or otherwise as in any manner licensing the holder or any other person or corporation, or conveying any rights or permission to manufacture, use, or sell any patented invention that may in any way be related thereto.

APPLICATION		PART No.	M F	REVISIONS			
NEXT ASSY	USED ON			SYM	DESCRIPTION	DATE	APPROVAL

SA-503

VERIFICATION PROCEDURE

S-II PROPELLANT LEVEL AND DEPLETION SENSORS (QALS)

73V1604

UNLESS OTHERWISE SPECIFIED DIMENSIONS ARE IN INCHES TOLERANCES ON: FRACTIONS DECIMALS ANGLES	ORIGINAL DATE OF DRAWING 7/22/68 DRAFTSMAN / CHECKER TRACER / CHECKER ENGINEER / ENGINEER	S-II PROPELLANT LEVEL AND DEPLETION SENSORS (QALS) SA-503	GEORGE C. MARSHALL SPACE FLIGHT CENTER NATIONAL AERONAUTICS AND SPACE ADMINISTRATION HUNTSVILLE, ALABAMA
MATERIAL	SUBMITTED Julius B. Campbell J. B. CAMPBELL		
HEAT TREATMENT			
FINAL PROTECTIVE FINISH	APPROVED H. B. Harrison H. B. HARRISON	SCALE / UNIT WT	DWG SIZE A 73V1604 SHEET 1 OF 5

REVISIONS			
SYM	DESCRIPTION	DATE	APPROVAL

1.0 SCOPE

THIS PROCEDURE WILL VERIFY THE NETWORK SYSTEM PROGRAM, "PROPELLANT LEVEL AND DEPLETION SENSORS", QALS.

2.0 APPLICABLE GOVERNMENT FURNISHED DOCUMENTS

DRAWINGS

AESS S-II ESE SATURN V	40M10590
AESS S-II STAGE SIMULATOR	40M34242
OPERATOR REFERENCE MANUAL FOR SLCC PROGRAMMING SYSTEM VEHICLE AS-503	IBM NO. 68-F11-0003
SPECIFICATIONS FOR THE TEST PROGRAMS FOR THE SATURN V LAUNCH COMPUTER COMPLEX, VOLUMES I AND II	MSFC NO. 1-4-441-9 IBM NO. 66-F11-0006

3.0 GENERAL NOTES

QALS WILL BE ENTERED FROM KEYBOARD IN ACCORDANCE WITH THE OPERATOR REFERENCE MANUAL. ALL PROGRAM OPTIONS WILL BE EXERCISED AND HARDWARES RESPONSE TO COMPUTER STIMULI WILL BE MONITORED.

4.0 PREREQUISITES

NONE

REVISIONS			
SYM	DESCRIPTION	DATE	APPROVAL

5.0 PROCEDURE

5.1 VERIFY THAT THE S-II IS POWERED UP PER S.O.P. 80X0201

5.2 VERIFY THAT MAIN BUS POWER 2D111 IS ON.

5.3 VERIFY THAT THE P.U. UNIT HAS BEEN RESET.

5.4 PLACE S18 ON THE NETWORKS PANEL TO AUTO FOR THE ENTIRE TEST.

5.5 VERIFY THAT THE IU IS POWERED UP AND PREREQUISITE POWER IS APPLIED TO SWITCH SELECTOR.

5.6 AT SANDERS DISPLAY CONSOLE NO. 4 CALL S-II PROPELLANT LEVEL SENSORS, QALS BY ENTERING $TPRQ QALS FROM THE SANDERS DISPLAY.

5.7 DURING QALS VERIFICATION, THE FOLLOWING MDO's AND MDI's WILL BE UTILIZED. MDI's CAN BE VERIFIED BY DEE-6 PRINTOUTS AND VISUAL INDICATIONS AT THE PROPELLANT DEPLETION PANEL.

SIGNAL	NOMENCLATURE	
MDI		
1520	LOX #1 PD	OPEN
1521	LOX #1 PD	DRY
1522	LH2 #1 PD	OPEN
1523	LH2 #1 PD	DRY
1524	LOX #2 PD	OPEN
1525	LOX #2 PD	DRY
1526	LH2 #2 PD	OPEN
1527	LH2 #2 PD	DRY
1528	LOX #3 PD	OPEN
1529	LOX #3 PD	DRY
1530	LH2 #3 PD	OPEN
1531	LH2 #3 PD	DRY
1532	LOX #4 PD	OPEN
1533	LOX #4 PD	DRY
1534	LH2 #4 PD	OPEN
1535	LH2 #4 PD	DRY
1536	LOX #5 PD	OPEN
1537	LOX #5 PD	DRY
1538	LH2 #5 PD	OPEN
1539	LH2 #5 PD	DRY

REVISIONS			
SYM	DESCRIPTION	DATE	APPROVAL

5.7 Continued

SIGNAL	NOMENCLATURE	
MDI		
1540	LOX DEPLETION	ON
1541	LH2 DEPLETION	ON
1542	NO LOX PD	DRY
1543	NO LH2 PD	DRY
1544	LH2 O/F	DRY
1545	LH2 F/F	DRY
1546	LOX O/F	DRY
1547	LOX F/F	DRY
2564	LH2 #14 PLMS	DRY
2565	LH2 #13 PLMS	DRY
2566	LH2 #12 PLMS	DRY
2567	LH2 #11 PLMS	DRY
2568	LH2 #10 PLMS	DRY
2569	LH2 #9 PLMS	DRY
2570	LH2 #8 PLMS	DRY
2571	LH2 #7 PLMS	DRY
2572	LH2 #6 PLMS	DRY
2573	LH2 #5 PLMS	DRY
2574	LH2 #4 PLMS	DRY
2575	LH2 #3 PLMS	DRY
2576	LH2 #2 PLMS	DRY
2577	LH2 #1 PLMS	DRY
2578	LOX #14 PLMS	DRY
2579	LOX #13 PLMS	DRY
2580	LOX #12 PLMS	DRY
2581	LOX #11 PLMS	DRY
2582	LOX #10 PLMS	DRY
2583	LOX #9 PLMS	DRY
2584	LOX #8 PLMS	DRY
2585	LOX #7 PLMS	DRY
2586	LOX #6 PLMS	DRY
2587	LOX #5 PLMS	DRY
2588	LOX #4 PLMS	DRY
2589	LOX #3 PLMS	DRY
2590	LOX #2 PLMS	DRY
2591	LOX #1 PLMS	DRY
1397	2D111 MAIN	ON
1396	SW. SELECTOR	ON
DDAS MEA		
EP1A2-26D01-01	2D15 ON	
BP1B0-25R07-01	ENGINE #1 C/O	
BP1B0-25R07-02	ENGINE #2 C/O	
BP1B0-25R07-03	ENGINE #3 C/O	
BP1B0-25R07-04	ENGINE #4 C/O	
BP1B0-25R07-05	ENGINE #5 C/O	

REVISIONS			
SYM	DESCRIPTION	DATE	APPROVAL

5.7 Continued

DDAS MEA	NOMENCLATURE
BP1B0-25R08-05	LOX DEPLETION OFF
BP1B0-25R08-06	LH2 DEPLETION OFF

MDO

334	PREVALVE LOCKOUT ON
1184	ENG. #1 IGN. DET SIM ON
1194	ENG. #2 MN STAGE OK SIM ON
1205	ENG. #3 MN STAGE OK SIM ON
1216	ENG. #4 MN STAGE OK SIM ON
1227	ENG. #5 MN STAGE OK SIM ON
1065	SIMULATED LAUNCH TEST
1174	ENG. #1 READY BYPASS
1185	ENG. #2 READY BYPASS
1196	ENG. #3 READY BYPASS
1207	ENG. #4 READY BYPASS
1218	ENG. #5 READY BYPASS
1172	ENGINE LOGIC RESET
1278	SENSOR #1 WET SIM ON
1229	SENSOR #2 WET SIM ON
1230	SENSOR #3 WET SIM ON
1231	SENSOR #4 WET SIM ON
1232	SENSOR #5 WET SIM ON
1233	SENSORS DRY SIMULATE
1279	SENSOR WET SIMULATE
1280	SENSOR OPEN SIMULATE
1060	PROPELLANT MGT POWER ON

CHANNEL

3	LOX DEPLETION ARM
42	LH2 DEPLETION ARM
49	ENGINE READY BYPASS RESET
20	ENGINE READY BYPASS

MSFC FORM 422 (VERTICAL) (AUGUST 1960)

NOTICE — When Government drawings, specifications, or other data are used for any purpose other than in connection with a definitely related Government procurement operation, the United States Government thereby incurs no responsibility nor obligation whatsoever; and the fact that the Government may have formulated, furnished, or in any way supplied the said drawings specifications or other data is not to be regarded by implication or otherwise as in any manner licensing the holder or any other person or corporation, or conveying any rights or permission to manufacture, use, or sell any patented invention that may in any way be related thereto.

APPLICATION		PART No.	M F	REVISIONS			
NEXT ASSY	USED ON			SYM	DESCRIPTION	DATE	APPROVAL

AS-503

VERIFICATION PROCEDURE

S-IC CUTOFF SENSORS FUNCTIONAL TEST PROGRAM (WACS)

73V1605

UNLESS OTHERWISE SPECIFIED DIMENSIONS ARE IN INCHES TOLERANCES ON: FRACTIONS DECIMALS ANGLES	ORIGINAL DATE OF DRAWING 7/22/68 DRAFTSMAN / CHECKER TRACER / CHECKER ENGINEER / ENGINEER	S-IC CUTOFF SENSORS FUNCTIONAL TEST PROGRAM (WACS) AS-503	GEORGE C. MARSHALL SPACE FLIGHT CENTER NATIONAL AERONAUTICS AND SPACE ADMINISTRATION HUNTSVILLE, ALABAMA
MATERIAL	SUBMITTED G. N. Coker G. N. COKER		
HEAT TREATMENT			
FINAL PROTECTIVE FINISH	APPROVED H. B. Harrison H. B. HARRISON	SCALE / UNIT WT	DWG SIZE A — 73V1605 — SHEET 1 OF 5

REVISIONS			
SYM	DESCRIPTION	DATE	APPROVAL

S-IC CUTOFF SENSORS FUNCTIONAL TEST PROGRAM (WACS)

1.0 SCOPE

THE CUTOFF SENSORS FUNCTIONAL TEST PROGRAM SHALL VERIFY THE PROPER OPERATION OF THE IN-FLIGHT CUTOFF CIRCUITRY ASSOCIATED WITH THE LOX AND FUEL LEVEL SENSORS. THE PROGRAM SHALL ACCOMPLISH THIS BY APPLYING APPROPRIATE COMMANDS TO THE THRUST OK LOGIC, THE ADJACENT ENGINE OUT LOGIC AND THE FUEL AND LOX LEVEL SENSOR LOGIC.

2.0 APPLICABLE GOVERNMNET FURNISHED DOCUMENTS

AESS S-IC ESE SCHEMATICS 40M10616

AESS S-IC STAGE SIMULATOR 40M34240

SPECIFICATIONS FOR THE TEST PROGRAMS
FOR THE SATURN V LAUNCH COMPUTER COMPLEX,
VEHICLE AS-503.

3.0 GENERAL NOTES

NONE

4.0 PREREQUISITES

4.1 S-IC STAGE IS POWERED UP.

4.2 SYSTEMS ARE IN ELECTRICAL SIMULATE MODE OR MAB MODE.

4.3 VERIFY THAT CARD KEY NO. 9 OR MASTER CARD KEY NO. 1 IS INSTALLED IN THE SANDERS DISPLAY CONSOLE.

4.4 OPEN CIRCUIT BREAKER CB2 ON POWER MODULE B201-168A10-1 (IGNITION MONITOR BUS "OFF").

4.5 PLACE SWITCH S14 ON NETWORKS PANEL TO THE "ON" POSITION.

4.6 ON THE CONTROL AND PURGE PANEL, PLACE SWITCHES S1, S4 AND S6 ON THE "ON" POSITION.

4.7 ON THE SPECIAL COMPONENT PANEL B202-124A2, PLACE SWITCH S1 TO THE "OFF" POSITION.

4.8 ON THE POWER SWITCHING PANEL B601-114A7 AT TEST CONDUCTOR CONSOLES PLACE SWITCH S3 (+23D121 BUS) TO THE "OFF" POSITION.

4.9 ON THE THRUST OK OAT PANEL B202-1137A1A3, PLACE SWITCHES S1 THROUGH S5 TO THE "OFF" POSITION.

REVISIONS			
SYM	DESCRIPTION	DATE	APPROVAL

5.0 PROCEDURE

5.1 CALL UP THE PROGRAM INTO HIGH SPEED MEMORY BY ENTERING $TPRQWACS AT THE DISPLAY CONSOLE.

5.2 EXECUTE THE PROGRAM BY ENTERING $PA AT THE DISPLAY CONSOLE.

5.3 COMPLETE THE PROGRAM ACTION BY PERFORMING OPTIONS AS DISPLAYED BY THE PROGRAM.

5.4 IF AN ERROR MESSAGE IS DISPLAYED DURING EXECUTION OF THE PROGRAM, PERFORM APPROPRIATE CORRECTIONS AND THEN CONTINUE WITH PROGRAM.

5.5 AFTER TERMINATION OF THE PROGRAM, REFER TO STEPS 4.4 THROUGH 4.9 AND RESTORE THE CIRCUIT BREAKER AND SWITCHES TO THE STATUS PRIOR TO THIS TEST.

6.0 ERROR MESSAGES TEST

6.1 REQUEST THE POWER ROOM TECHNICIAN TO "CLOSE" CIRCUIT BREAKER CB2 ON POWER MODULE B201-168A10-1.

NOTE: OTHER SETUPS MAY BE USED TO CAUSE OTHER MDO, MDI AND/OR DDAS DISCRETE SCAN ERRORS AT STEP 6.5.

6.2 ON THE NETWORKS PANEL, PLACE SWITCH S11 TO THE "INHIBIT" POSITION.

NOTE: OTHER SETUPS MAY BE USED TO CAUSE THE SWITCH SELECTOR ERROR AT STEP 6.11.

6.3 INSTALL A BREAKOUT BOAX AT PATCH DISTRIBUTOR B202-124A1-J60 AND INSTALL BANANA PLUGS IN ALL JACKS EXCEPT A AND DD.

NOTE: OTHER SETUPS MAY BE USED TO CAUSE SIMULAR ERRORS WITH OTHER MDO, MDI AND/OR DDAS DISCRETE ERRORS AT STEPS 6.8 AND 6.14.

6.4 CALL UP AND EXECUTE THE PROGRAM PER STEPS 5.1 AND 5.2.

6.5 VERIFY THAT THE FOLLOWING ERROR MESSAGE OR SIMILAR MESSAGE WITH OTHER SELECTED MDO, MDI AND/OR DDAS DISCRETE ERRORS IS DISPLAYED DURING THE INITIAL SCAN.

REVISIONS			
SYM	DESCRIPTION	DATE	APPROVAL

6.5 Continued

MDI-0149 ON, ANTICPATED AS OFF
DISCREPANCIES IN INITIAL
SCAN AS GIVEN ABOVE, TYPE IN
$PA TO RESCAN
****000715 WAS LAST STEP EXECUTED
****WACS NOW IN SEMI MODE VIA...ERROR.

6.6 REQUEST THE POWER ROOM TECHNICIAN TO "OPEN" CIRCUIT BREAKER CB2 ON POWER MODULE B201-168A10-1 OR PERFORM OTHER CORRECTIONS TO ELIMINATE OTHER SELECTED INITIAL SCAN ERRORS.

6.7 ENTER MESSAGE $PA AT THE KEYBOARD.

6.8 VERIFY THAT THE FOLLOWING ERROR MESSAGE OR SIMILAR MESSAGE WITH OTHER SELECTED MDO, MDI, AND/OR DDAS DISCRETER ERRORS IS DISPLAYED:

****MDI SCAN ERROR AT XXXX XX
0125 (OFF), SCANNED FOR (ON)
****XXXX XX WAS LAST STEP EXECUTED
**** WACS NOW IN SEMI MODE VIA...ERROR
WHERE XXXX XX IS THE PROGRAM STEP
AND SUB-STEP NUMBER.

6.9 INSTALL A BANANA PLUG AT JACK A OF THE BREAKOUT BOX WHICH IS INSTALLED AT PATCH DISTRIBUTOR B202-124A1-J60 OR PERFORM OTHER CORRECTIONS TO ELIMINATE OTHER SELECTED DISCRETE-SCAN ERRORS.

6.10 ENTER MESSAGE $PA AT THE KEYBOARD.

6.11 VERIFY THAT THE FOLLOWING ERROR MESSAGE IS DISPLAYED:

MMMMMMMMMMMMMMMMM
****WACS CANNOT EXECUTE SSEL-OPERATOR AT
STPXXXX XX
****XXXX XX WAS LAST STEP EXECUTED
****WACS NOW IN SEMI MODE VIA...ERROR

6.12 ON THE NETWORKS PANEL, PLACE SWITCH S11 TO THE "AUTO" POSITION OR PERFORM OTHER CORRECTIONS TO ELIMINATE THE SWITCH SELECTOR ERROR.

6.13 ENTER MESSAGE $PAXXXXYY AT THE KEYBOARD WHERE XXXXYY IS THE STEP AND SUB-STEP NUMBER ASSOCIATED WITH THE SWITCH SELECTOR ERROR IN STEP 6.11.

6.14 VERIFY THAT THE FOLLOWING ERROR MESSAGE IS DISPLAYED.

REVISIONS			
SYM	DESCRIPTION	DATE	APPROVAL

6.14 Continued

****DELY-STMT AT XXXX XX DELAY OVER 60 SECONDS
****XXXX XX WAS LAST STEP EXECUTED
**** WACS NOW IN SEMI MODE VIA...DELAY
WHERE XXXX XX IS THE PROGRAM STEP AND SUB-STEP NUMBER

6.15 INSTALL A BANANA PLUG IN JACK DD ON THE BREAKOUT BOX WHICH IS INSTALLED AT PATCH DISTRIBUTOR B202-124A1-J60 OR PERFORM OTHER CORRECTIONS TO ELIMINATE THE DELAY ERROR.

6.16 ENTER MESSAGE $PA AT THE KEYBOARD.

6.17 AFTER TERMINATION OF THE PROGRAM, REMOVE ALL SPECIAL TEST SETUPS AND RESTORE ALL SWITCHES TO THEIR ORIGIANAL CONFIGURATION.

6.18 THE ERROR MESSAGES AVAILABLE FOR DISPLAY BY THE PROGRAM ARE LISTED BELOW:

(a)
DISCREPANCIES IN INITIAL
SCAN AS GIVEN ABOVE, TYPE
$PA TO RESCAN
****00715 WAS LAST STEP EXECUTED
****WACS NOW IN SEMI MODE VIA...ERROR

(b)
****DDD SCAN ERROR AT XXXX XX
NNNN (ON OR OFF), SCANNED FOR (OFF OR ON)
****XXXX XX WAS LAST STEP EXECUTED
****WACS NOW IS SEMI MODE VIA...ERROR.

WHERE DDD INDICATES TYPE OF DISCRETE, NNNN INDICATES THE DISCRETE NUMBER AND XXXX XX INDICATES THE S TEP AND SUB-STEP NUMBER.

(c)
MMMMMMMMMMMMMMMMM
****WACS CANNOT EXECUTE SSEL-OPERATOR AT
STP XXXX XX
****XXXX XX WAS LAST STEP EXECUTED
**** WACS NOW IN SEMI MODE VIA...ERROR.

(d)
****DELY-STMT AT XXXX XX DELAYED OVER 60 SECONDS
****XXXX XX WAS LAST STEP EXECUTED
****WACS NOW IN SEMI MODE VIA...DELAY

WHERE XXXX XX INDICATES THE STEP AND SUB-STEP NUMBER.

Government drawings, specifications, or other data are used for any purpose other than in connection with a definitely related Government procurement operation, the United States Government thereby incurs no responsibility nor any obligation whatsoever; and the fact that the Government may have formulated, furnished, or in any way supplied the said drawings, specifications, or other data is not to be regarded by implication or otherwise as in any manner licensing the holder or any other person or corporation or conveying any rights or permission to manufacture, use or sell any patented invention that may in any way be related thereto.

APPLICATION		PART No.	M F	REVISIONS			
NEXT ASSY	USED ON			SYM	DESCRIPTION	DATE	APPROVAL

SA-503

VERIFICATION PROCEDURE

S-IVB SWITCH SELECTOR RESET (XASS)

73V1608

UNLESS OTHERWISE SPECIFIED DIMENSIONS ARE IN INCHES TOLERANCES ON: FRACTIONS DECIMALS ANGLES	ORIGINAL DATE OF DRAWING 5/13/68 DRAFTSMAN / CHECKER TRACER / CHECKER ENGINEER / ENGINEER	S-IVB SWITCH SELECTOR RESET (XASS)	GEORGE C. MARSHALL SPACE FLIGHT CENTER NATIONAL AERONAUTICS AND SPACE ADMINISTRATION HUNTSVILLE, ALABAMA
MATERIAL	SUBMITTED R. L. Wilhite		
HEAT TREATMENT			
FINAL PROTECTIVE FINISH	APPROVED R. A. Drakey	SCALE / UNIT WT	DWG SIZE A 73V1608 SHEET 1 OF 8

REVISIONS			
SYM	DESCRIPTION	DATE	APPROVAL

1.0 SCOPE

This procedure describes the instructions to verify IBM Test Program S-IVB Switch Selector Reset (XASS).

2.0 APPLICABLE GOVERNMENT FURNISHED DOCUMENTS

2.1 9001 - Douglas 500ST Instrumentation and Control System Schematics

2.2 40M13870 - Advanced Electrical System Schematics, S-IVB ESE Saturn V

2.3 III-4-440-5 Operator Reference Manual for SLCC Programming System SA-503, dated May 1, 1968.

3.0 GENERAL NOTES

The test program will be called up and executed as described in the IBM User's Manual. Each option will be exercised (if applicable) and hardware stimulation checked.

4.0 PREREQUISITES

4.1 IU powered up (switch selector panel operative).

4.2 Verify LVDA/ESE switch in ESE position.

4.3 S-IVB powered up.

4.4 IU and S-IVB DDAS and Telemetry on line and supporting.

4.5 DEE-6 is on line and supporting.

5.0 PROCEDURE

5.1 Issue the following S-IVB switch selector codes from Sanders Display Console No. 1. Depress "TYPE" pushbutton and type in $MS4BXXX (where XXX is channel no.), then depress "EDIT EXECUTE".

5.1.1 Telemeter P1 CH-64(00111010)

5.1.2 PU Activate on CH-5 (00000010)

5.1.3 PCM Group Power CH-40 (00101111)

REVISIONS			
SYM	DESCRIPTION	DATE	APPROVAL

5.1.4 Flight Mode on CH-28 (01111100)

5.1.5 PU LH Boil Off, Bias On CH-34 (01001111)

5.2 Verify the following indications are "ON":

PANEL	NOMENCLATURE	LAMP NO.
Propellant Utilization	PU Activate On	DS2
Propellant Utilization	PU Oven & Inverter Pwr. On	DS1
Measuring & RF	PCM Group Pwr. On	DS11
Measuring & RF	Telemeter P1 On	DS18
Hydraulic	Aux Hyd Pump Power On	DS3
Propellant Utilization	Fuel Boil Off Bias On	DS3

5.3 Test Program "S-IVB Switch Selector Reset" (XASS) will be called into high speed memory from Sanders Display console No. 1. It will be called up and executed in accordance with paragraph 2.0 of the Program Description Document. Each message as described in the Document shall be displayed.

*5.4 After the test program has terminated, verify that the following indications are "OFF":

PANEL	NOMENCLATURE	LAMP NO.
Propellant Utilization	PU Activate On	DS2
Propellant Utilization	PU Oven and Inverter Pwr. On	DS1
Measuring & RF	PCM Group Pwr. On	DS11
Measuring & RF	Telemeter P1 On	DS18
Hydraulic	Aux. Hyd. Pump Power On	DS3
Propellant Utilization	Fuel Boil Off Bias On	DS3

6.0 ERROR MESSAGES

No error messages will be displayed other than the normal ATOLL messages.

* Denotes steps to be performed in Phase I only.

REVISIONS			
SYM	DESCRIPTION	DATE	APPROVAL

TABLE II

S-IVB SWITCH SELECTOR CHANNEL FUNCTIONS

CHANNEL	NOMENCLATURE	POSITION
3	LOX REPRESSURIZATION CONTROL VALVE OPEN COMMAND	ON
4	LOX REPRESSURIZATION CONTROL VALVE OPEN COMMAND	OFF
5	P.U. ACTIVATE	ON
6	P.U. ACTIVATE	OFF
7	P.U. INVERTER & DC OVEN POWER COMMAND	ON
8	P.U. INVERTER & DC OVEN POWER COMMAND	OFF
9	ENGINE START	ON
10	ENGINE READY BYPASS COMMAND	ON
11	FUEL INJ. TEMPERATURE BYPASS COMMAND	ON
12	ENGINE CUT-OFF	ON
13	ENGINE CUT-OFF	OFF
14	LOX CHILLDOWN PUMP PURGE OUTLET LINE DUMP	ON
15	VALVE OPEN COMMAND	OFF
16	FUEL INJ. TEMPERATURE BYPASS COMMAND	OFF
17	P.U. VALVE HARDOVER POSITION	ON
18	P.U. VALVE HARDOVER POSITION	OFF
19	SPARE	OFF
20	LOX CHILLDOWN PUMP PURGE CONTROL VALVE ENABLE	ON
21	COMMAND	OFF
22	LOX CHILLDOWN PUMP	ON
23	LOX CHILLDOWN PUMP	OFF
24	ENGINE PUMP PURGE CONTROL VALVE ENABLE	ON

REVISIONS			
SYM	DESCRIPTION	DATE	APPROVAL

TABLE II (CONT)

CHANNEL	NOMENCLATURE	POSITION
25	ENGINE PUMP PURGE CONTROL VALVE ENABLE COMMAND	OFF
26	O_2H_2 BURNER LH_2 VALVE & LOX SHUTDOWN VALVE OPEN PILOT VALVE COMMAND	ON
27	ENGINE START	OFF
28	AUXILIARY HYDRAULIC PUMP FLIGHT MODE	ON
29	AUXILIARY HYDRAULIC PUMP FLIGHT MODE	OFF
30	AUXILIARY HYDRAULIC PUMP COAST MODE COMMAND	ON
31	AUXILIARY HYDRAULIC PUMP COAST MODE COMMAND	OFF
32	SECOND BURN COMMAND	ON
33	SECOND BURN COMMAND	OFF
34	P.U. FUEL BOIL OFF BIAS COMMAND	ON
35	P.U. FUEL BOIL OFF BIAS COMMAND	OFF
36	REPRESS SYSTEM MODE SELECTOR (AMPIENT)	ON
37	REPRESS SYSTEM MODE SELECTOR (CRYOGENIC)	OFF
38	LH_2 TANK VENT OPEN COMMAND	ON
39	LH_2 REPRESSURIZATION CONTROL VALVE	ON
40	PCM GROUP SYSTEM	ON
41	PCM GROUP SYSTEM	OFF
42	70 ULLAGE ENGINE #1	ON
43	70 ULLAGE ENGINE #1	OFF
44	LOX TANK NON-PROPULSIVE VENT OPEN LATCH	ON
45	LOX TANK NON-PROPULSIVE VENT OPEN LATCH	OFF
46	FM/FM SYSTEM GROUP	ON
47	FM/FM SYSTEM GROUP	OFF
50	HEAT EXCHANGER BY-PASS VALVE ENABLE	ON

REVISIONS			
SYM	DESCRIPTION	DATE	APPROVAL

TABLE II (CONT)

CHANNEL	NOMENCLATURE	POSITION
51	HEAT EXCHANGER BY-PASS VALVE ENABLE	ON
54	CHARGING ULLAGE IGNITION	ON
55	CHARGING ULLAGE JETTISON	ON
56	FIRE ULLAGE IGNITION	ON
57	FIRE ULLAGE JETTISON	ON
58	FUEL CHILLDOWN PUMP	ON
59	FUEL CHILLDOWN PUMP	OFF
60	O_2H_2 BURNER LH_2 VALVE & LOX SHUTDOWN VALVE	ON
61	CLOSE PILOT VALVE COMMAND	OFF
62	SPECIAL CALIBRATION RELAY GROUP	ON
63	SPECIAL CALIBRATION RELAY GROUP	OFF
64	PCM RF ASSY. POWER COMMAND	ON
65	PCM RF ASSY POWER COMMAND	OFF
66	RF ASSY POWER COMMAND	ON
67	RF ASSY POWER COMMAND	OFF
68	FIRST BURN COMMAND	ON
69	FIRST BURN COMMAND	OFF
70	BURNER EXCITER COMMAND	ON
71	BURNER EXCITER COMMAND	OFF
72	O_2H_2 BURNER LH_2 VALVE & LOX SHUTDOWN VALVE OPEN PILOT VALVE COMMAND	OFF
73	F.U. RESET	OFF
74	O_2H_2 BURNER LOX VALVE PILOT VALVE CLOSE	ON
75	O_2H_2 BURNER LOX VALVE PILOT VALVE CLOSE	OFF
76	LH_2 TANK VENT OPEN COMMAND	OFF

REVISIONS			
SYM	DESCRIPTION	DATE	APPROVAL

TABLE II (CONT)

CHANNEL	NOMENCLATURE	POSITION
77	LH_2 TANK VENT BOOST CLOSE COMMAND	ON
78	LH TANK VENT BOOST CLOSE COMMAND	OFF
79	COAST PERIOD COMMAND	ON
80	COAST PERIOD COMMAND	OFF
81	LH_2 REPRESSURIZATION CONTROL VALVE	OFF
82	PREVALVE CLOSE COMMAND	ON
83	PREVALVE CLOSE COMMAND	OFF
84	FUEL TANK CONTINUOUS VENT	ON
85	VOTING CIRCUIT ENABLE	ON
86	VOTING CIRCUIT ENABLE	OFF
87	VALVE CLOSE COMMAND	OFF
88	CHARGING COMMAND RESET	OFF
89	O_2H_2 BURNER LOX VALVE PILOT VALVE OPEN	ON
90	O_2H_2 BURNER LOX VALVE PILOT VALVE OPEN	OFF
91	CHILLDOWN SHUT-OFF PILOT	ON
92	CHILLDOWN SHUT-OFF PILOT	OFF
93	LOX VENT OPEN COMMAND	ON
94	LOX VENT OPEN COMMAND	OFF
95	LOX VENT VALVE BOOST CLOSE COMMAND	ON
96	LOX VENT VALVE BOOST CLOSE COMMAND	OFF
97	POINT LEVEL SENSOR ARMING COMMAND	ON
98	POINT LEVEL SENSOR ARMING COMMAND	OFF
99	RATE GYRO COMMAND	ON
100	RATE GYRO COMMAND	OFF
101	70 LB. ULLAGE ENGINE #2	ON

REVISIONS			
SYM	DESCRIPTION	DATE	APPROVAL

TABLE II (CONT)

CHANNEL	NOMENCLATURE	POSITION
102	70 LB. ULLAGE ENGINE #2	OFF
103	LOX TANK FLIGHT PRESSURIZATION SYSTEM ON COMMAND	ON
104	LOX TANK FLIGHT PRESSURIZATION SYSTEM ON COMMAND	OFF
105	LOX TANK NPV OPEN	ON
106	LOX TANK NPV OPEN	OFF
107	LH_2 TANK CONTINUOUS VENT RELIEF OVR. SHTF VLV OPEN	ON
108	LH_2 TANK CONTINUOUS VENT RELIEF OVR.SHTF VLV OPEN	OFF
109	SPARE	ON
110	SPARE	OFF
111	FUEL TANK CONTINUOUS VENT ORIFICE SHTF VALVE OPEN COMMAND	ON
112	FUEL TANK CONTINUOUS VENT ORIFICE SHTF VALVE OPEN COMMAND	OFF

MSFC FORM 422 (VERTICAL) (AUGUST 1960)

NOTICE — When Government drawings, specifications, or other data are used for any purpose other than in connection with a definitely related Government procurement operation, the United States Government thereby incurs no responsibility nor obligation whatsoever; and the fact that the Government may have formulated, furnished, or in any way supplied the said drawings specifications or other data is not to be regarded by implication or otherwise as in any manner licensing the holder or any other person or corporation, or conveying any rights or permission to manufacture, use, or sell any patented invention that may in any way be related thereto.

APPLICATION		PART No.	M F	REVISIONS			
NEXT ASSY	USED ON			SYM	DESCRIPTION	DATE	APPROVAL

AS-503

VERIFICATION PROCEDURE

DISCRETE ACTIVITY MONITOR (NT97/NE97)

73V1613

UNLESS OTHERWISE SPECIFIED DIMENSIONS ARE IN INCHES TOLERANCES ON: FRACTIONS DECIMALS ANGLES	ORIGINAL DATE OF DRAWING 7/23/68 DRAFTSMAN / CHECKER TRACER / CHECKER ENGINEER / ENGINEER	Discrete Activity Monitor (NT97/NE97) AS-503	GEORGE C. MARSHALL SPACE FLIGHT CENTER NATIONAL AERONAUTICS AND SPACE ADMINISTRATION HUNTSVILLE, ALABAMA
MATERIAL	SUBMITTED P. L. Sutherland P. L. Sutherland		
HEAT TREATMENT			
FINAL PROTECTIVE FINISH	APPROVED J. C. Ash J. C. Ash	SCALE UNIT WT	DWG SIZE A 73V1613 SHEET 1 OF 11

REVISIONS			
SYM	DESCRIPTION	DATE	APPROVAL

1.0 SCOPE

This procedure will verify that portion of the IBM User's Manual on the Discrete Activity Monitor Test programs.

2.0 APPLICABLE GOVERNMENT FURNISHED DOCUMENTS

2.1 MSFC No. 888-4-440-4, Specifications for the Operating System for the Saturn V Launch Computer Complex, Volume 1, Revision 1.

2.2 Operator Reference Manual for SLCC Programming System, MSFC No. III-4-440-5, IBM No. 68-F11-0003, dated 15 June 1968.

3.0 GENERAL NOTES

Test Program NT97 will be called into operation and each type of discrete activity message will be exercised in accordance with the instructions in the IBM User's Manual. The Function Executor NE97 executes along with NT97, however, it may be requested to provide information concerning MLF discretes only.

4.0 PREREQUISITES

4.1 Both 110A's and the display system loaded and on-line with the IBM system tapes per IBM Computer Operator Instructions.

4.2 The LCC and MLF 110A computer's Line Printer, Card Reader, Discrete Control Equipment, and Signal Conditioners (1504A1A5) on-line.

4.3 A master display console.

4.4 All stages powered down.

4.5 The Discrete Test Panels in both the LCC and MLF connected to J070017 in cabinet 701 (IODC 5).

4.6 The DO PATCHBOARDS in the Discrete Signal Conditioner Equipment in the MLF (B202-1131A1, A2, A3, and A4) removed.

5.0 PROCEDURE

NOTE: Reloading the LCC and/or MLF computers during execution of this procedure will require reconfiguration of the Discrete Action Tables by exercising the Action Table Program NT99 using the patch cards referenced in the NT99 validation procedure. At this time, the operation may continue from the point of interruption.

REVISIONS			
SYM	DESCRIPTION	DATE	APPROVAL

5.1 Place all Discrete Test Panel switches in both the LCC and MLF in the OFF position, the UNIT-LOOP switches in UNIT, and the DI DO-LOGIC switches in the DI DO position.

5.2 Depress TYPE, key in the following and depress EDIT EXECUTE.

```
$GO
```

5.3 Verify that the following message is displayed:

```
SYSTEM IS IN GO MODE
GO          SYS TO GO
```

5.4 Position the MLF INHIBIT switch to INHIBIT. (Vehicle Networks Panel B601-1105A1A1) Depress TYPE, key in the following, and depress EDIT EXECUTE.

5.5 Verify that the following messages are displayed:

```
STEP   IDLE

DISCRETE ACTION TABLE MODIFY PROGRAM IS READY TO
EXECUTE INITIAL OPTIONS ARE

      $P1 - CARD INPUT ONLY
      $P2 - CARD INPUT, TAPE OUTPUT
      $P3 - TAPE INPUT ONLY

ENTER DESIRED OPTION TO EXECUTE
```

5.6 Verify that the NT99 patch cards, referenced in the NT99 Pre-verification Instructions, are positioned in the LCC Card Reader and the reader is on-line.

5.7 Depress TYPE, key in the following, and depress EDIT EXECUTE.

```
$P1
```

5.8 Verify that the patch cards have been read and that the following messages have been displayed:

```
NT99          ACTION MOD.
TEST PROGRAM HAS STARTED EXECUTION

NT99          ACTION MOD.
TEST PROGRAM HAS COMPLETED EXECUTION
```

REVISIONS			
SYM	DESCRIPTION	DATE	APPROVAL

5.9 Verify that the following message has been displayed:

DISCRETE INITIALIZATION PROGRAM IS READY TO EXECUTE
REQUIRED HARDWARE CONFIGURATION

A. LCC AND MLF D.C.E
   1. POWER ON
   2. COMPUTER MODE
   3. MTOAD TEST
B. LCC COMPUTER INHIBIT SWITCH ON OFF
C. MLF COMPUTER INHIBIT SWITCH ON INHIBIT

INITIAL OPTIONS ARE:

$P0 - ZEROS TEST
$P1 - BASELINE 1
$P2 - READ D.C.E.
$P3 - BASELINE 3
$P4 - BASELINE 4
$P5 - BASELINE 5

5.10 Verify that the MLF INHIBIT switch is positioned to INHIBIT.

5.11 Depress TYPE, key in the following, and depress EDIT EXECUTE.

$P2

5.12 Verify that MDO's 0-59 are not displayed.

5.13 Position the MLC INHIBIT switch to AUTO.

5.14 Depress TYPE, key in the following, and depress EDIT EXECUTE.

$GO

5.15 Verify that the following message is displayed.

SYSTEM IS IN GO MODE
GO SYS TO GO

5.16 Depress TYPE, key in the following, and depress EDIT EXECUTE.

$TPRQNT97

5.17 Verify that the following message has been displayed:

THIS REQUEST HAS BEEN STACHED NT97

5.18 Verify that the following message has been displayed:

NT97 - DISCRETE MONITOR OPTIONS

REVISIONS			
SYM	DESCRIPTION	DATE	APPROVAL

ENTER OPTIONS AFTER STARTING EXECUTION OF NT97

$PREMXXXX - TERMINATE REMOTE DISPLAY
$PDISXXXX - RESUME REMOTE DISPLAY
$PSURYYYY - SUPPRESS MDI DISPLAY
$PACTYYYY - ACTIVATE MDI DISPLAY

XXXX = SUBSYSTEM (INTG, POWR, NAVG, IUED, S-4B, S-IC, OR PROP)

ENTER $PX TO START EXECUTION OF NT97

5.19 Depress TYPE, key in the following, and depress EDIT EXECUTE.

$PX

5.20 Verify that the following message has been displayed:

NT97 DI-DO MONTR
TEST PROGRAM HAS STARTED EXECUTION
MLC GENERAL MESSAGE NO. 0343 XXXX/XX. GMT
NE97
MLC GENERAL MESSAGE NO. 0333 XXXX/XX. GMT
ROUTINE NE97 EXECUTING EVERY 010 SECONDS

5.21 Set Discrete Test Panel Switches A, a, b, AA, BB, and NN to ON (down position) on the LCC Discrete Test Panel.

5.22 Verify that the following messages have been displayed:

LDI	0000	ON				
LDI	0023	ON	MDO	0023	ISSUED ON	DE-5
LDI	0024	ON	MDO	0024	ISSUED ON	DE-5
LDI	0047	ON	MDO	0047	ISSUED ON	DE-5
LDI	0048	ON	MDO	0048	ISSUED ON	DE-5
LDI	0059	ON	MDO	0059	ISSUED ON	DE-5

5.23 Set Discrete Test Panel Switches A, a, b, AA, BB, and NN to the ON (down) position on the MLF Discrete Test Panel.

5.24 Verify that the following messages have been displayed:

MDI	0000	ON	LDO	0000	ISSUED ON	S-IC
MDI	0023	ON	LDO	0023	ISSUED ON	S-IC
MDI	0024	ON	LDO	0024	ISSUED ON	S-IC
MDI	0047	ON	LDO	0047	ISSUED ON	S-IC
MDI	0048	ON	LDO	0048	ISSUED ON	S-IC
MDI	0059	ON	LDO	0059	ISSUED ON	S-IC

REVISIONS			
SYM	DESCRIPTION	DATE	APPROVAL

5.25 Perform a display keyboard request for each of the following four items by pressing TYPE, typing in the appropriate information, and pressing EDIT EXECUTE.

$SLDI0023
$SLDO0023
$SMDO0023
$SMDI0023

5.26 Verify that the following messages have been displayed:

SLDI0023 ON
SLDO0023 ON
SMDO0023 ON
SMDI0023 ON

5.27 Issued the following MDO's in the ON stage through the display console keyboard:

$MDONXXXX

0503, 0504, 1007, 1008, 1511, 1512, 2015

5.28 Verify that the following messages have been displayed:

MDON0503 ISSUED
MDO 503 ISSUED ON PWR
MDON0504 ISSUED
MDO 504 ISSUED ON PWR
MDON1007 ISSUED
MDO 1007 ISSUED ON NAV
MDON1008 ISSUED
MDO 1008 ISSUED ON S-II
MDON1511 ISSUED
MDO 1511 ISSUED ON INT
MDON1512 ISSUED
MDO 1512 ISSUED ON INT
MDON2015 ISSUED
MDO 2015 ISSUED ON INT

5.29 Issue the following LDO's in the ON stage through the display console keyboard:

$LDONXXX
0503, 0504, 1007, 1008, 1511, 1512, 2015

5.30 Verify that the following messages have been displayed:

LDON0503 ISSUED
LDO 503 ISSUED ON INT
LDON0504 ISSUED
LDO 504 ISSUED ON INT

REVISIONS			
SYM	DESCRIPTION	DATE	APPROVAL

LDON1007	ISSUED		
LDO 1007	ISSUED	ON	NAV
LDON1008	ISSUED		
LDO 1008	ISSUED	ON	S-II
LDON1511	ISSUED		
LDO 1511	ISSUED	ON	DE-5
LDON1512	ISSUED		
LDO 1512	ISSUED	ON	DE-5
LDON2015	ISSUED		
LDO 2015	ISSUED	ON	INT

5.31 Verify that the DO's have been issued by checking status lights on the Discrete Control Equipment (Brown Racks) at the LCC and MLF.

LCC

Discrete Out	MUX Bits	DO Address Word Bit	Data Word Bit Position	LDO Status
0000	000	0	0	ON
0023	000	0	23	ON
0024	000	1	0	ON
0047	000	1	23	ON
0048	000	2	0	ON
0059	000	2	11	ON

MLF

Discrete Out	MUX Bits	DO Address Word Bit	Data Word Bit Position	LDO Status
0503	000	20	23	ON
0504	001	0	0	ON
1007	001	20	23	ON
1008	010	0	0	ON
1511	010	20	23	ON
1512	011	0	0	ON
2015	011	20	23	ON

5.32 Set Discrete Test Panel Switches A, a, b, AA, BB, and NN to OFF (up position) at the LCC.

5.33 Verify that the following messages have been displayed:

LDI	0000	OF	MDO				
LDI	0023	OF	MDO	0023	ISSUED	OF	DE-5
LDI	0024	OF	MDO	0024	ISSUED	OF	DE-5
LDI	0047	OF	MDO	0047	ISSUED	OF	DE-5
LDI	0048	OF	MDO	0048	ISSUED	OF	DE-5
LDI	0059	OF	MDO	0059	ISSUED	OF	DE-5

REVISIONS			
SYM	DESCRIPTION	DATE	APPROVAL

5.34 Set Discrete Test Panel Switches A, a, b, AA, BB, and NN to the OFF position at the MLF.

5.35 Verify that the following messages have been displayed:

MDI	0000	OF	LDO	0000	ISSUED	OF	S-IC
MDI	0023	OF	LDO	0023	ISSUED	OF	S-IC
MDI	0024	OF	LDO	0024	ISSUED	OF	S-IC
MDI	0047	OF	LDO	0047	ISSUED	OF	S-IC
MDI	0048	OF	LDO	0048	ISSUED	OF	S-IC
MDI	0059	OF	LDO	0059	ISSUED	OF	S-IC

5.36 Issue the following MDO's in the OFF state through the display console keyboard:

$MDOFXXXX
0503, 0504, 1007, 1008, 1511, 1512, 2015

5.37 Verify that the following messages have been displayed:

MDOF0503	ISSUED		
MDO 503	ISSUED	OF	PWR
MDOF0504	ISSUED		
MDO 504	ISSUED	OF	PWR
MDOF1007	ISSUED		
MDO 1007	ISSUED	OF	NAV
MDOF1008	ISSUED		
MDO 1008	ISSUED	OF	S-II
MDOF1511	ISSUED		
MDO 1511	ISSUED	OF	INT
MDOF1512	ISSUED		
MDOF1512	ISSUED	OF	INT
MDO 2015	ISSUED		
MDOF2015	ISSUED	OF	INT

5.38 Verify the following LDO's in the OFF state through the display console keyboard:

$LDOFXXXX
0503, 0504, 1007, 1008, 1511, 1512, 2015

5.39 Verify that the following messages have been displayed:

LDOF0503	ISSUED		
LDO 503	ISSUED	OF	INT
LDOF0504	ISSUED		
LDO 504	ISSUED	OF	INT
LDOF1007	ISSUED		
LDO 1007	ISSUED	OF	NAV
LDOF1008	ISSUED		
LDO 1008	ISSUED	OF	S-II
LDOF1511	ISSUED		
LDO 1511	ISSUED	OF	DE-5

REVISIONS			
SYM	DESCRIPTION	DATE	APPROVAL

LDOF1512	ISSUED		
LDO 1512	ISSUED	OF	DE-5
LDOF2015	ISSUED		
LDO 2015	ISSUED	OF	INT

5.40 Verify that the LDO's and MDO's have been issued by checking the Discrete Control Equipment (Brown Racks) at the LCC and MLF.

MLF & LCC

Discrete Out	MUX Bits	DO Address Word Bit	Data Word Bit Position	DO Status
0000	000	0	0	OFF
0023	000	0	23	OFF
0024	000	1	0	OFF
0047	000	1	23	OFF
0048	000	2	0	OFF
0059	000	2	11	OFF
0503	000	20	23	OFF
0504	001	0	0	OFF
1007	001	20	23	OFF
1008	010	0	0	OFF
1511	010	20	23	OFF
1512	011	0	0	OFF
2015	011	20	23	OFF

5.41 Place LCC Discrete Test Panel Switch b to the ON (down position).

5.42 Verify that MDO 0024 has been issued at the MLF Brown Rack.

Discrete Out	MUX Bits	DO Address Word Bit	Data Word Bit Position	MDO Status
0024	000	01	0	ON

5.43 Depress TYPE, key in the following, and depress EDIT EXECUTE.

$MDOF0024

5.44 Verify that the following message has been displayed:

MDOF0024 INHIBITED

5.45 Depress TYPE, key in the following, and depress EDIT EXECUTE.

$OSI10024

REVISIONS			
SYM	DESCRIPTION	DATE	APPROVAL

5.46 Verify that the following message has been displayed:

INVALID KEYBOARD ENTRY MADE AT THIS CONSOLE 01-Ø

5.47 Verify that MDO 0024 is still in the ON state at the MLF Brown Rack.

Discrete Out	MUX Bits	DO Address Word Bit	Data Word Bit Position	MDO Status
0024	00	01	00	ON

5.48 Depress TYPE, key in the following, and depress EDIT EXECUTE.

$MDOF0024

5.49 Depress TYPE, key in the following, and depress EDIT EXECUTE.

$SMDO0024

5.50 Depress TYPE, key in the following, and depress EDIT EXECUTE.

$OSI10024

5.51 Verify that the following messages have been displayed:

MDOF0024 INHIBITED

SMDO0024 ON

INVALID KEYBOARD ENTRY MADE AT THIS CONSOLE 01-Ø

5.52 Depress TYPE, key in the following, and depress EDIT EXECUTE.

$SMDO0024

5.53 Turn LCC Discrete Test Panel Switch b OFF.

5.54 Verify that the following messages have been displayed:

SMDO0024 ON

LDI 0024 OF MDO 0024 ISSUED OF DE-5

5.55 Depress TYPE, key in the following, and depress EDIT EXECUTE.

$SMDI4000

5.56 Verify that the following message has been displayed:

SMDI4000 INVALID

REVISIONS			
SYM	DESCRIPTION	DATE	APPROVAL

5.57 Depress TYPE, key in the following, and depress EDIT EXECUTE.

$OIS10024

5.58 Verify that the following message has been displayed:

INVALID KEYBOARD ENTRY MADE AT THIS CONSOLE 01-Ø

5.59 Depress TYPE, key in the following, and depress EDIT EXECUTE.

$MDON2016

5.60 Verify that the following message has been displayed:

MDON2016 INVALID

5.61 Depress TYPE, key in the following, and depress EDIT EXECUTE.

$LDON0+93

5.62 Verify that the following message has been displayed:

LDON0+93 INVALID

5.63 Depress TYPE, key in the following, and depress EDIT EXECUTE.

$MDI10189

5.64 Verify that the following message has been displayed:

MDI10188 INVALID

5.65 Depress TYPE, key in the following, and depress EDIT EXECUTE.

$LDI0188

5.66 Verify that the following message has been displayed:

LDI0188 INVALID

5.67 Depress TYPE, key in the following, and depress EDIT EXECUTE.

$TERMNT97

5.68 Verify that the following messages have been displayed:

NT97 DI-DO MONTR
PROG. TERMINATED BY DISPLAY INPUT
THIS COMMAND IS BEING PROCESSED - TERMNT97

5.69 Disconnect Discrete Test Panels in both MLF and LCC and return cables to normal configuration.

5.70 Replace DO Signal Conditioner Patchboards.

MSFC FORM 422 (VERTICAL) (AUGUST 1960)

NOTICE—When Government drawings, specifications, or other data are used for any purpose other than in connection with a definitely related Government procurement operation, the United States Government thereby incurs no responsibility nor obligation whatsoever; and the fact that the Government may have formulated, furnished, or in any way supplied the said drawings specifications or other data is not to be regarded by implication or otherwise as in any manner licensing the holder or any other person or corporation, or conveying any rights or permission to manufacture, use, or sell any patented invention that may in any way be related thereto.

APPLICATION		PART No.	M F	REVISIONS			
NEXT ASSY	USED ON			SYM	DESCRIPTION	DATE	APPROVAL

AS-503

VERIFICATION PROCEDURE

DISCRETE RESPONSE TIME TEST PROGRAM (NTDR)

72V1614

UNLESS OTHERWISE SPECIFIED DIMENSIONS ARE IN INCHES TOLERANCES ON: FRACTIONS DECIMALS ANGLES	ORIGINAL DATE OF DRAWING 7/22/68 DRAFTSMAN / CHECKER TRACER / CHECKER ENGINEER / ENGINEER	DISCRETE RESPONSE TIME TEST PROGRAM (NTDR) AS-503	GEORGE C. MARSHALL SPACE FLIGHT CENTER NATIONAL AERONAUTICS AND SPACE ADMINISTRATION HUNTSVILLE, ALABAMA	
MATERIAL	SUBMITTED G. N. COKER			
HEAT TREATMENT	APPROVED H. B. HARRISON	SCALE	DWG SIZE A	73V1614
FINAL PROTECTIVE FINISH		UNIT WT		SHEET 1 OF 8

REVISIONS			
SYM	DESCRIPTION	DATE	APPROVAL

1.0 SCOPE

THIS PROGRAM PROVIDES THE CAPABILITY TO ISSUE A SPECIFIED DISCRETE COMMAND (MDO) AND SENSE FOR RETURN OF AN ASSOCIATED DISCRETE RESPONSE (MDI OR DDAS) WITHIN AN EXPECTED TIME SPAN. A PULSED MDO MAY ALSO BE ISSUED WITH NO RESPONSE CHECKED.

2.0 APPLICABLE GOVERNMENT FURNISHED DOCUMENTS

AESS S-IC ESE SATURN V	40M10616
AESS S-IC STAGE SIMULATOR	40M34240
AESS S-II ESE SATURN V	40M10590
AESS S-II STAGE SIMULATOR	40M34242
AESS S-IVB ESE SATURN V	40M13870
AESS S-IVB STAGE SIMULATOR	40M34245
AESS I.U. ESE SATURN V	40M14490
AESS GROUND DDAS SATURN V	40M13921
AESS COMPUTER INTERFACE SATURN V	40M18344
OPERATOR REFERENCE MANUAL FOR SLCC PROGRAMMING SYSTEM SATURN V	IBM NO. 68-F11-0003
SPECIFICATIONS FOR THE TEST PROGRAMS FOR THE SATURN V LAUNCH COMPUTER COMPLEX, VEHICLE AS-503	

3.0 GENERAL NOTES

3.1 PROGRAM NTDR WILL BE ENTERED FROM THE KEYBOARD IN ACCORDANCE WITH THE IBM OPERATOR REFERENCE MANUAL.

3.2 DISCRETE COMMANDS (MDO) SHALL BE SELECTED AS REQUIRED BY THE PROGRAM.

4.0 PREREQUISITES

4.1 DISCRETE CONTROL EQUIPMENT SYSTEMS WILL BE OPERATING.

4.2 DDAS SYSTEMS WILL BE OPERATING.

4.3 S-IC STAGE SYSTEMS WILL BE POWERED UP.

4.4 S-II STAGE SYSTEMS WILL BE POWERED UP.

REVISIONS			
SYM	DESCRIPTION	DATE	APPROVAL

4.0 Continued

4.5 S-IVB STAGE SYSTEMS WILL BE POWERED UP.

4.6 IU STAGE SYSTEMS WILL BE POWERED UP.

5.0 PROCEDURE

5.1 CALL UP THE PROGRAM BY ENTERING $TPRQNTDR AT THE KEYBOARD.

5.2 EXECUTE THE PROGRAM BY ENTERING $PX AT THE KEYBOARD.

5.3 EXECUTE THE PROGRAM OPTION TO PERFORM MDI DISCRETE RESPONSE CHECKS AS REQUIRED BY THE PROGRAM PER SECTION 8, NTDR TABLE 1 OF IBM OPERATOR REFERENCE MANUAL.

5.4 NORMAL SYSTEM ACTION MESSAGES WILL BE DISPLAYED OR ERROR MESSAGES WILL BE DISPLAYED PER SECTIONS 10A AND 10B OF THE IBM OPERATOR REFERENCE MANUAL.

5.5 EXECUTE THE PROGRAM OPTION TO ISSUE A PULSED MDO WITHOUT A RESPONSE CHECK AS REQUIRED BY THE PROGRAM PER SECTION 8, NTDR TABLE 1 OF IBM OPERATOR REFERENCE MANUAL.

5.6 NORMAL OR ERROR MESSAGES WILL BE DISPLAYED PER STEP 5.4 FOR ISSUING PULSED MDO WITHOUT A RESPONSE CHECK.

5.7 EXECUTE THE PROGRAM OPTION TO PERFORM DDAS DISCRETE RESPONSE CHECKS AS REQUIRED BY THE PROGRAM PER SECTION 8, NTDR TABLE 1 OF IBM OPERATOR REFERENCE MANUAL.

5.8 NORMAL OR ERROR MESSAGES WILL BE DISPLAYED PER STEP 5.4 FOR DDAS DISCRETE RESPONSE CHECKS.

5.9 TERMINATE THE PROGRAM BY ENTERING $TERMNTDR AT THE KEYBOARD.

6.0 ERROR MESSAGES

6.1 PRESS TYPE, KEY IN THE FOLLOWING, AND PRESS "EDIT EXECUTE"

$TPRQNTDR

6.2 OBSERVE THE FOLLOWING MESSAGE:

THIS REQUEST HAS BEEN STACKED TPRQNTDR
PROGRAM NTDR LOADED. TO EXECUTE ENTER $PX

REVISIONS			
SYM	DESCRIPTION	DATE	APPROVAL

6.3 PRESS TYPE, KEY IN THE FOLLOWING, AND PRESS "EDIT EXECUTE"

$PX

6.4 OBSERVE THE FOLLOWING MESSAGE:

NTDR DISC RESP TM
TEST PROGRAM HAS STARTED EXECUTION
NTDR MSG
DISCRETE RESPONSE TEST ENTER DATA

6.5 PRESS TYPE, KEY IN THE FOLLOWING, AND PRESS "EDIT EXECUTE"

$PMD0320011/0200

6.6 OBSERVE THE FOLLOWING MESSAGE:

NTDR MSG
MDO 3200 NUMBER TOO LARGE REENTER
NTDR MSG
DISCRETE RESPONSE TEST ENTER DATA

6.7 PRESS TYPE, KEY IN THE FOLLOWING, AND PRESS "EDIT EXECUTE"

$PMD0080010/0004-0500/37771

6.8 OBSERVE THE FOLLOWING MESSAGE:

NTDR MSG
MDI 3777 TOO LARGE REENTER
NTDR MESSAGE
DISCRETE RESPONSE TEST ENTER DATA

6.9 PRESS TYPE, KEY IN THE FOLLOWING, AND PRESS "EDIT EXECUTE"

$PMD010780500MDI11603MD00

6.10 OBSERVE THE FOLLOWING MESSAGE:

NTDR MSG
INVALID PARAMETER ENTERED. REENTER WHEN
THE AVAILABLE OPTIONS ARE REDISPLAYED
NTDR MSG
DISCRETE RESPONSE TEST ENTER DATA

6.11 PRESS TYPE, KEY IN THE FOLLOWING, AND PRESS "EDIT EXECUTE"

$MDON0780

6.12 OBSERVE THE FOLLOWING MESSAGE:

MDON0780 ISSUED

REVISIONS			
SYM	DESCRIPTION	DATE	APPROVAL

6.13 PRESS TYPE, KEY IN THE FOLLOWING, AND PRESS "EDIT EXECUTE"

$PMD0078011/0003-0600/06031

6.14 OBSERVE THE FOLLOWING MESSAGE:

NTDR MSG
CANNOT ISSUE MDO 0780 EXISTING STATE
ISNT CORRECT
NTDR MSG
DISCRETE RESPONSE TEST ENTER DATA

6.15 PRESS TYPE, KEY IN THE FOLLOWING, AND PRESS "EDIT EXECUTE"

$MD0F0780

6.16 OBSERVE THE FOLLOWING MESSAGE:

MD0F0800 ISSUED

6.17 PLACE THE "ENGINE LOGIC RESET" SWITCH (S28) ON THE S-II ALL ENGINES PANEL TO THE OFF POSITION.

6.18 PRESS TYPE, KEY IN THE FOLLOWING, AND PRESS "EDIT EXECUTE"

$PMD0117211/0003-0500/06030

6.19 OBSERVE THE FOLLOWING MESSAGE:

NTDR MSG
MDO 1172 INHIBITED
NTDR MSG
DISCRETE RESPONSE TEST ENTER DATA

6.20 PLACE THE LCC ESE DRS CIU INTO THE MANUAL MODE

6.21 PRESS TYPE, KEY IN THE FOLLOWING, AND PRESS "EDIT EXECUTE"

$PMD0080010/0003-0500/EP1A2-24M05-040

6.22 OBSERVE THE FOLLOWING MESSAGE:

NTDR MSG
CANNOT ACCESS DDAS
NTDR MSG
DISCRETE RESPONSE TEST ENTER DATA

6.23 RETURN THE ESE DRS CIU TO THE COMPUTER MODE. RETURN THE "ENGINE LOGIC RESET" SWITCH (S28) ON THE "S-II ALL ENGINES" PANEL TO THE AUTO POSITION.

REVISIONS			
SYM	DESCRIPTION	DATE	APPROVAL

6.24 PRESS TYPE, KEY IN THE FOLLOWING, AND PRESS "EDIT EXECUTE"

$PMD0078010/0900-0910/06031

6.25 OBSERVE THE FOLLOWING MESSAGE:

NTDR MSG
MDO ISSUED. MDI RESPONSE OUT OF TOLERANCE. RESPONSE OCCURRED TOO SOON
NTDR MSG
DISCRETE RESPONSE TEST ENTER DATA

6.26 PRESS TYPE, KEY IN THE FOLLOWING, AND PRESS "EDIT EXECUTE"

$PMD0078010/0001-0002/06031

6.27 OBSERVE THE FOLLOWING MESSAGE:

NTDR MSG
MDO ISSUED, MDI RESPONSE OUT OF TOLERANCE, RESPONSE DID NOT OCCUR WITHIN MAXIMUM ALLOWABLE TIME.
NTDR MSG
DISCRETE RESPONSE TEST ENTER DATA

6.28 PRESS TYPE, KEY IN THE FOLLOWING, AND PRESS "EDIT EXECUTE"

$PMD0080010/0800-0825/EP1A2-24M05-040

6.29 OBSERVE THE FOLLOWING MESSAGE:

NTDR MSG
MDO ISSUED, DDAS RESPONSE OUT OF TOLERANCE, RESPONSE OCCURRED TOO SOON
NTDR MSG
DISCRETE RESPONSE TEST

6.30 PRESS TYPE, KEY IN THE FOLLOWING, AND PRESS "EDIT EXECUTE"

$PMD0080010/0001-0003/EP1A2-24M05-040

6.31 OBSERVE THE FOLLOWING MESSAGE:

NTDR MSG
MDO ISSUED. DDAS RESPONSE OUT OF TOLERANCE. RESPONSE DID NOT OCCUR WITHIN MAXIMUM ALLOWABLE TIME.
NTDR MSG
DISCRETE RESPONSE TEST ENTER DATA

REVISIONS			
SYM	DESCRIPTION	DATE	APPROVAL

6.32 PRESS TYPE, KEY IN THE FOLLOWING, AND PRESS "EDIT EXECUTE"

$TERMNTDR

6.33 OBSERVE THE FOLLOWING MESSAGE:

NTDR MSG
NTDR TERMINATED. CHECK MDO FOR
THE DESIRED STATE.
LCC GENERAL MESSAGE NO. 0337 HHMM/SS. GMT
THIS COMMAND IS BEING PROCESSED TERMNTDR
NTDR DISC RESP TM
PROG. TERMINATED BY DISPLAY INPUT

6.34 LIST OF ERROR MESSAGES

NTDR MSG
DATA LINK FAILED

NTDR MSG
CANNOT ACCESS DDAS

NTDR MSG
INVALID PARAMETER ENTERED. REENTER WHEN
THE AVAILABLE OPTIONS ARE REDISPLAYED.

NTDR MSG
MDO **** NUMBER TOO LARGE REENTER

NTDR MSG
MDI **** NUMBER TOO LARGE REENTER

NTDR MSG
CANNOT ISSUE MDO **** EXISTING STATE ISNT CORRECT

NTDR MSG
MDO **** INHIBITED

NTDR MSG
HARDWARE OR SOFTWARE FAILURE OCCURRED

NTDR MSG
MDO **** DISALLOWED

NTDR MSG
MDO ISSUED, MDI RESPONSE OUT OF
TOLERANCE. RESPONSE OCCURRED TOO
SOON.

NTDR MSG
MDO ISSUED, MDI RESPONSE OUT OF
TOLERANCE. RESPONSE DID NOT OCCUR
WITHIN MAXIMUM ALLOWABLE TIME.

REVISIONS			
SYM	DESCRIPTION	DATE	APPROVAL

6.34 Continued

NTDR msg
MDO ISSUED, DDAS RESPONSE OUT OF TOLERANCE. RESPONSE OCCURRED TOO SOON.

NTDR MSG
MDO ISSUED, DDAS RESPONSE OUT OF TOLERANCE. RESPONSE DID NOT OCCUR WITHIN MAXIMUM ALLOWABLE TIME.

MSFC FORM 422 (VERTICAL) (AUGUST 1960)

NOTICE—When Government drawings, specifications, or other data are used for any purpose other than in connection with a definitely related Government procurement operation, the United States Government thereby incurs no responsibility nor obligation whatsoever; and the fact that the Government may have formulated, furnished, or in any way supplied the said drawings specifications or other data is not to be regarded by implication or otherwise as in any manner licensing the holder or any other person or corporation, or conveying any rights or permission to manufacture, use, or sell any patented invention that may in any way be related thereto.

APPLICATION		PART No.	MF	REVISIONS			
NEXT ASSY	USED ON			SYM	DESCRIPTION	DATE	APPROVAL

AS-503

VERIFICATION PROCEDURE

S-IC BUS MONITOR PROGRAM (NEBM)

73V1615

UNLESS OTHERWISE SPECIFIED DIMENSIONS ARE IN INCHES TOLERANCES ON: FRACTIONS DECIMALS ANGLES	ORIGINAL DATE OF DRAWING 7/22/68 DRAFTSMAN / CHECKER TRACER / CHECKER ENGINEER / ENGINEER	S-IC BUS MONITOR PROGRAM (NEBM) AS-503	GEORGE C. MARSHALL SPACE FLIGHT CENTER NATIONAL AERONAUTICS AND SPACE ADMINISTRATION HUNTSVILLE, ALABAMA
MATERIAL	SUBMITTED G. N. Coker G. N. COKER		
HEAT TREATMENT			
FINAL PROTECTIVE FINISH	APPROVED H. B. Harrison H. B. HARRISON	SCALE UNIT WT	DWG SIZE A 73V1615 SHEET 1 OF 6

REVISIONS			
SYM	DESCRIPTION	DATE	APPROVAL

1.0 SCOPE

THIS PROGRAM PROVIDES THE CAPABILITY TO MEASURE AND DISPLAY CERTAIN S-IC POWER DISTRIBUTION BUS CURRENTS AND VOLTAGES.

2.0 APPLICABLE GOVERNMENT FURNISHED DOCUMENTS

AESS S-IC POWER ESE SATURN V	40M13614
AESS S-IC ESE SATURN V	40M10616
AESS S-IC STAGE SIMULATOR	40M34240
OPERATOR REFERENCE MANUAL FOR SLCC PROGRAMMING SYSTEM SATURN V	IBM NO. 68-F11-0003
SPECIFICATIONS FOR THE TEST PROGRAM FOR THE SATURN V LAUNCH COMPUTER COMPLEX, VEHICLE AS-503	

3.0 GENERAL NOTES

NONE

4.0 PREREQUISITES

4.1 ALL S-IC SYSTEMS WILL BE IN THE ELECTRICAL SIMULATE MODE OR MAB MODE.

4.2 S-IC STAGE WILL BE POWERED UP.

5.0 PROCEDURE

5.1 CALL UP AND EXECUTE THE PROGRAM BY ENTERING $FUNCNEBM/NNN AT THE KEYBOARD WHERE NNN REPRESENTS THE DESIRED PROGRAM EXECUTION RATE BETWEEN 010 AND 999 SECONDS.

5.2 BUS CURRENT AND VOLTAGE MEASUREMENTS WILL BE DISPLAYED AND PERIODICALLY UPDATED AT THE PROGRAM EXECUTION RATE SELECTED.

5.3 IF AN ERROR MESSAGE IS DISPLAYED DURING EXECUTION OF THE PROGRAM, REFER TO SECTIONS 10A AND 10B OF IBM OPERATOR REFERENCE MANUAL.

5.4 TERMINATE THE PROGRAM BY ENTERING $FUNTNEBM AT THE KEYBOARD.

REVISIONS			
SYM	DESCRIPTION	DATE	APPROVAL

6.0 ERROR MESSAGE TEST

6.1 PRESS TYPE, KEY IN THE FOLLOWING, AND PRESS "EDIT EXECUTE"

$FUNCNEBM/010

6.2 OBSERVE THE FOLLOWING MESSAGE:

VM	096-340	1D100 PWR SUPP VOLTS	XX.XXX
VM	097-340	1D200 PWR SUPP VOLTS	XX.XXX
VXM	098-340	1D11 BUS VOLTAGE	XX.XXX
XM	102-340	1D110 BUS VOLTAGE	XX.XXX
XM	103-340	1D210 BUS VOLTAGE	XX.XXX
VXM	107-340	1D21 BUS VOLTAGE	XX.XXX
VM	114-340	1D110 30V BTRY BCKUP	XX.XXX
VM	115-340	1D200 30V BTRY BCKUP	XX.XXX
VM	119-340	1D100 PWR SUPP CURR	XX.XXX
VM	120-340	1D200 PWR SUPP CURR	X.XXX
XM	130-340	1D111 BUS CURRENT	X.XXX
XM	131-340	1D211 BUS CURRENT	X.XXX
VXM	001-322	1D81 BUS VOLTAGE	X.XXX
VXM	002-322	1D82 BUS VOLTAGE	X.XXX
VXM	003-322	1D83 BUS VOLTAGE	X.XXX
VXM	004-322	1D84 BUS VOLTAGE	X.XXX
VXM	005-322	1D85 BUS VOLTAGE	X.XXX
VXM	006-322	1D86 BUS VOLTAGE	X.XXX
VAM	007-322	1D87 BUS VOLTAGE	X.XXX
M	008-115	1D10 BUS VOLTS	X.XXX
M	009-115	1D20 BUS VOLTS	X.XXX
M	010-115	1D10 BUS AMPS	X.XXX
M	011-115	1D20 BUS AMPS	X.XXX

THIS ROUTINE HAS BEEN SUCCESSFULLY EXECUTED NEBM
ROUTINE NEBM EXECUTING EVERY 010 SECONDS

6.3 REQUEST THE S-IC NETWORKS ENGINEER INCREASE THE 1D200 POWER SUPPLY VOLTAGE TO THE UPPER LIMIT (APPROXIMATELY THREE-VOLT INCREASE).

6.4 WITHIN 10 SECONDS, THE DISPLAY IN STEP 6.2 SHOULD BE UPDATED TO REJECT THIS VOLTAGE INCREASE (VM 097-340).

6.5 REQUEST THE S-IC NETWORKS ENGINEER RETURN THE 1D200 POWER SUPPLY TO NORMAL.

6.6 THE UPDATED DISPLAY SHOULD REFLECT THIS CHANGE.

REVISIONS			
SYM	DESCRIPTION	DATE	APPROVAL

6.7 PLACE THE MLC ESE DDAS IN THE SIMULATE MODE WITH ADDRESS EPIA0-19-10 SET TO ZERO VOLTS (AN OCTAL COUNT OF 30).

6.8 ON THE NEXT DISPLAY UPDATE, ENSURE THE VALUE DISPLAYED FOR THE 1D100 PWR SUPPLY VOLTS (VM 096-340) IS 20.000.

NOTE

WHEN THE DRS IS IN THE "SIMULATE" MODE, THOSE ADDRESSES NOT SIMULATED WILL BE INVALID.

6.9 PLACE ALL ADDRESS OF THE "ESE DDAS" TO ZERO VOLTS (OCTAL COUNT OF 30).

6.10 OBSERVE ON NEXT UPDATE THAT ALL DISPLAYED VALUES ARE THE LOWER LIMIT OF THE MEASUREMENT RANGE. THE FOLLOWING DISPLAY REPRESENTS ZERO SCALE VALUES:

VM	096-340	1D100 PWR SUPP VOLTS	20.000
VM	097-340	1D200 PWR SUPP VOLTS	20.000
VXM	098-340	1D11 BUS VOLTAGE	20.000
XM	102-340	1D110 BUS VOLTAGE	20.000
XM	103-340	1D210 BUS VOLTAGE	20.000
VXM	107-340	1D21 BUS VOLTAGE	20.000
VM	114-340	1D110 30V BTRY BCKUP	20.000
VM	115-340	1D200 30V BTRY BCKUP	20.000
VM	119-340	1D100 PWR SUPP CURR	0.000
VM	120-340	1D200 PWR SUPP CURR	0.000
XM	130-340	1D111 BUS CURRENT	0.000
XM	131-340	1D211 BUS CURRENT	0.000
VXM	001-322	1D81 BUS VOLTAGE	0.000
VXM	002-322	1D82 BUS VOLTAGE	0.000
VXM	003-322	1D83 BUS VOLTAGE	0.000
VXM	004-322	1D84 BUS VOLTAGE	0.000
VXM	005-322	1D85 BUS VOLTAGE	0.000
VXM	006-322	1D86 BUS VOLTAGE	0.000
VXM	007-322	1D87 BUS VOLTAGE	0.000
M	008-115	1D10 BUS VOLTS	0.000
M	009-115	1D20 BUS VOLTS	29.227
M	010-115	1D10 BUS AMPS	0.328
M	011-115	1D20 BUS AMPS	3.948

6.11 CONFIRM THAT ALL DISPLAYED INFORMATION IS RECORDING ON LOG TAPE ON THE NEGATIVE.

REVISIONS			
SYM	DESCRIPTION	DATE	APPROVAL

6.12 PLACE ALL ADDRESSES OF THE "ESE DDAS" TO FULL SCALE LEVEL (OCTAL COUNT OF 1747).

6.13 OBSERVE ON THE NEXT UPDATE THAT ALL DISPLAYED VALUES ARE FULL SCALE. THE FOLLOWING DISPLAY REPRESENTS FULL SCALE VALUES:

VM	096-340	1D100 PWR SUPP VOLTS	40.000
VM	097-340	1D200 PWR SUPP VOLTS	40.000
VXM	098-340	1D11 BUS VOLTAGE	40.000
XM	102-340	1D110 BUS VOLTAGE	40.000
XM	103-340	1D210 BUS VOLTAGE	40.000
VXM	107-340	1D21 BUS VOLTAGE	40.000
VM	114-340	1D110 30V BTRY BCKUP	40.000
VM	115-340	1D200 30V BTRY BCKUP	40.000
VM	119-340	1D100 PWR SUPP CURR	300.000
VM	120-340	1D200 PWR SUPP CURR	300.000
XM	130-340	1D111 BUS CURRENT	60.000
XM	131-340	1D211 BUS CURRENT	200.000
VXM	001-322	1D81 BUS VOLTAGE	7.500
VXM	002-322	1D82 BUS VOLTAGE	7.500
VXM	003-322	1D83 BUS VOLTAGE	7.500
VXM	004-322	1D84 BUS VOLTAGE	7.500
VXM	005-322	1D85 BUS VOLTAGE	7.500
VXM	006-322	1D86 BUS VOLTAGE	7.500
VXM	007-322	1D87 BUS VOLTAGE	7.500

6.14 REQUEST THAT THE MLC ESE DDAS CIU BE PLACED OFF-LINE (OUT OF COMPUTER MODE).

6.15 OBSERVE THE FOLLOWING MESSAGE:

CANNOT ACCESS DDAS. EXIT TAKEN

NOTE

THE ABOVE MESSAGE WILL APPEAR AT THE PROGRAM REPETITION RATE UNTIL THE COMPUTER CAN READ THE CIU.

6.16 RETURN THE ESE DRS CIU TO THE COMPUTER MODE.

6.17 OBSERVE THAT THE MESSAGE IN STEP 6.15 NO LONGER APPEARS AND THAT NORMAL DISPLAYS AS SHOWN IN STEP 6.13 AGAIN REAPPEAR.

6.18 PRESS TYPE, KEY IN THE FOLLOWING, AND PRESS "EDIT EXECUTE"

$FUNTNEBM

REVISIONS			
SYM	DESCRIPTION	DATE	APPROVAL

6.19 OBSERVE THE FOLLOWING MESSAGE:

THIS COMMAND IS BEING EXECUTED. FUNTNEBM
FORCED TEST END HAS OCCURRED.

6.20 REQUEST THAT THE ESE DDAS BE RETURNED TO THE NORMAL (RECEIVE) MODE.

6.21 RETAIN THE LCC LINE PRINTER PRINTOUT FOR EVALUATION.

NOTICE — When Government drawings, specifications, or other data are used for any purpose other than in connection with a definitely related Government procurement operation, the United States Government thereby incurs no responsibility nor obligation whatsoever; and the fact that the Government may have formulated, furnished, or in any way supplied the said drawings specifications or other data is not to be regarded by implication or otherwise as in any manner licensing the holder or any other person or corporation, or conveying any rights or permission to manufacture, use, or sell any patented invention that may in any way be related thereto.

APPLICATION		PART No.	MF	REVISIONS			
NEXT ASSY	USED ON			SYM	DESCRIPTION	DATE	APPROVAL

SA-503

VERIFICATION PROCEDURE

S-II PANEL LAMP TEST (QAPL)

73V1616

UNLESS OTHERWISE SPECIFIED DIMENSIONS ARE IN INCHES TOLERANCES ON: FRACTIONS DECIMALS ANGLES	ORIGINAL DATE OF DRAWING 7/22/68 DRAFTSMAN / CHECKER TRACER / CHECKER ENGINEER / ENGINEER	S-II PANEL LAMP TEST (QAPL) AS-503	GEORGE C. MARSHALL SPACE FLIGHT CENTER NATIONAL AERONAUTICS AND SPACE ADMINISTRATION HUNTSVILLE, ALABAMA
MATERIAL	SUBMITTED Julius B. Campbell J. B. CAMPBELL		
HEAT TREATMENT		SCALE	DWG SIZE A — 73V1616
FINAL PROTECTIVE FINISH	APPROVED H. B. Harrison H. B. HARRISON	UNIT WT	SHEET 1 OF 11

REVISIONS			
SYM	DESCRIPTION	DATE	APPROVAL

1.0 SCOPE

THIS PROCEDURE WILL VERIFY THE NETWORK SYSTEM PROGRAM, "S-II PANEL LAMP TEST, QAPL".

2.0 APPLICABLE GOVERNMENT FURNISHED DOCUMENTS

DRAWINGS

AESS S-II ESE SATURN V	40M10590
AESS S-II STAGE SIMULATORS	40M34242
OPERATOR REFERENCE MANUAL FOR SLCC PROGRAMMING SYSTEM VEHICLE SA-503	IBM NO. 68-F11-0003
SPECIFICATIONS FOR THE TEST PROGRAM FOR THE SATURN V LCC VOLUMES I AND II	MSFC NO. 1-4-441-9 IBM NO. 66-F11-0006

3.0 GENERAL NOTES

QAPL WILL BE CALLED UP AND ALL PROGRAM OPTIONS WILL BE EXERCISED AND HARDWARES RESPONSE TO COMPUTER STIMULI WILL BE MONITORED.

4.0 PREREQUISITES

NONE

REVISIONS			
SYM	DESCRIPTION	DATE	APPROVAL

5.0 PROCEDURE

5.1 S-II SHALL BE POWERED DOWN.

5.2 BUS 20D121 SHALL BE TURNED ON.

5.3 AT SANDERS DISPLAY CONSOLE No. 4 ENTER $TPRQQAPL TO CALL S-II PANEL LAMP TEST.

5.4 DURING QAPL VERIFICATION, THE FOLLOWING LDO's AND LIGHTS WILL BE UTILIZED:

PANEL	DS No.	LDO
ENGINE 201	DS1	1208
	DS6	1134
	DS7	1136
	DS8	1138
	DS9	1203
	DS10	1140
	DS12	1142
	DS14	1135
	DS15	1137
	DS17	1141
	DS22	1143
	DS23	1139
	DS25	1133
	DS26	1213
	DS27	1223
	DS30	1214
ENGINE 202	DS1	1209
	DS6	1145
	DS7	1147
	DS8	1149
	DS9	1204
	DS10	1151
	DS12	1153
	DS14	1146
	DS15	1148
	DS17	1152
	DS22	1154
	DS23	1150
	DS25	1144

REVISIONS			
SYM	DESCRIPTION	DATE	APPROVAL

PANEL	DS No.	LDO
ENGINE 202	DS26	1215
	DS27	1224
	DS30	1216
ENGINE 203	DS1	1210
	DS6	1156
	DS7	1158
	DS8	1160
	DS9	1205
	DS10	1162
	DS12	1164
	DS14	1157
	DS15	1159
	DS17	1163
	DS22	1165
	DS23	1161
	DS25	1155
	DS26	1217
	DS27	1225
	DS30	1218
ENGINE 204	DS1	1211
	DS6	1167
	DS7	1169
	DS8	1171
	DS9	1206
	DS10	1173
	DS12	1175
	DS14	1168
	DS15	1170
	DS17	1174
	DS22	1176
	DS23	1172
	DS25	1166
	DS26	1219
	DS27	1518
	DS30	1220

REVISIONS			
SYM	DESCRIPTION	DATE	APPROVAL

PANEL	DS No.	LDO
ENGINE 205	DS1	1212
	DS6	1178
	DS7	1180
	DS8	1182
	DS9	1207
	DS10	1184
	DS12	1186
	DS14	1179
	DS15	1181
	DS17	1185
	DS22	1187
	DS23	1183
	DS25	1177
	DS26	1221
	DS27	1519
	DS30	1222
RECIRCULATION	DS3	1571
	DS4	1067
	DS8	1077
	DS10	1073
	DS11	1066
	DS13	1089
	DS16	1132
	DS17	1076
	DS18	1072
	DS19	1080
	DS20	1079
	DS22	1078
	DS24	1081
ALL ENGINE	DS1	1194
	DS2	1195
	DS4	1190
	DS5	1188
	DS6	1191
	DS7	1189
	DS8	1192
	DS10	1193
	DS11	1549
	DS13	1627
	DS14	1196
	DS15	1199
	DS20	1197
	DS22	1630

REVISIONS			
SYM	DESCRIPTION	DATE	APPROVAL

PANEL	DS NO.	LDO
GROUND PNEUMATICS	DS35	0560
	DS45	1561
	DS46	1560
	DS62	1068
PRESSURIZATION	DS1	1103
	DS2	1118
	DS3	0569
	DS4	1399
	DS5	1102
	DS6	1094
	DS7	1017
	DS8	1098
	DS9	1117
	DS10	1110
	DS11	1404
	DS12	1114
	DS13	1569
	DS14	1095
	DS15	1096
	DS16	1099
	DS17	1570
	DS18	1111
	DS19	1112
	DS20	1115
	DS29	1104
	DS31	1105
	DS32	1559
	DS33	1120
	DS35	1551
	DS36	1558
	DS41	1108
	DS42	1107
	DS44	0568
	DS47	1101
	DS48	1109
	DS51	1116
	DS52	1097
PROPELLANT MONITOR	DS25	1546
	DS26	1545
	DS27	1547
	DS28	1544
	DS29	1552
	DS33	1553
	DS62	1123
	DS69	1550
	DS73	1132
	DS94	1122
	DS95	1124

REVISIONS			
SYM	DESCRIPTION	DATE	APPROVAL

PANEL	DS No.	LDO
PROPELLANT MONITOR	DS98	1128
	DS99	1129
	DS102	1126
	DS106	1131
LEAK DETECTION AND PURGE (KSC ONLY)	DS1	1563
	DS2	1596
	DS3	1405
	DS8	1568
PROPELLANT DEPLETION	DS1	1521
	DS2	1525
	DS3	1529
	DS4	1533
	DS5	1537
	DS6	1540
	DS7	1541
	DS9	1523
	DS10	1527
	DS11	1531
	DS12	1535
	DS13	1539
	DS17	1520
	DS18	1524
	DS19	1528
	DS20	1532
	DS21	1536
	DS25	1522
	DS26	1526
	DS27	1530
	DS28	1534
	DS29	1538
PROPELLANT UTILIZATION	DS1	1548
EVENTS DISPLAY	DS5	1201
	DS6	1554
	DS8	1009
	DS12	1065
	DS14	1200
	DS15	1018
	DS19	1549
	DS20	1091
	DS21	1119
	DS22	1021
	DS28	1543

REVISIONS			
SYM	DESCRIPTION	DATE	APPROVAL

PANEL	DS No.	LDO
EVENTS DISPLAY	DS29	1553
	DS30	1117
	DS31	1010
	DS32	1011
	DS33	1397
	DS36	1542
	DS37	1202
	DS38	1130
	DS46	1102
	DS47	1019
	DS48	1020
	DS51	1396
	DS52	1548
	DS53	1106
	DS54	1125
	DS61	1552
	DS62	1555
	DS68	1008
	DS69	1100
	DS71	1013
	DS72	1012
	DS83	1080
	DS88	1032
	DS89	1544
	DS90	1547
	DS96	1033
	DS97	1127
	DS98	1121
	DS99	1079
	DS100	1081
	DS101	1101
	DS102	1116
	DS104	1028
	DS109	1103
	DS110	1118
	DS112	1025
	DS117	1098
	DS118	1114
	DS120	1024
	DS125	1099
	DS126	1115
	DS128	1027
	DS132	1082
	DS136	1026
	DS137	1131
	DS138	1126

REVISIONS			
SYM	DESCRIPTION	DATE	APPROVAL

PANEL	DS No.	LDO
EVENTS DISPLAY	DS141	1104
	DS142	1120
	DS144	1023
	DS150	1404
	DS152	1029
	DS153	1129
	DS154	1124
	DS163	1196
	DS164	1133
	DS165	1144
	DS166	1155
	DS167	1166
	DS168	1177
	DS169	1062
	DS177	1041
	DS178	1040
	DS180	1142
	DS181	1153
	DS182	1164
	DS183	1175
	DS184	1186
	DS185	1047
	DS186	1046
	DS187	1197
	DS188	1143
	DS189	1154
	DS190	1165
	DS191	1176
	DS192	1187
	DS193	1053
	DS194	1052
	DS196	1140
	DS197	1151
	DS198	1162
	DS199	1173
	DS200	1184
	DS201	1059
	DS202	1058
	DS204	1141
	DS205	1052
	DS206	1163
	DS207	1174
	DS208	1185
	DS209	1063
	DS211	1193
	DS219	1198

REVISIONS			
SYM	DESCRIPTION	DATE	APPROVAL

PANEL	DS No.	LDO
EVENTS DISPLAY	DS225	1014
	DS233	564
	DS235	1630
	DS236	1627
	DS237	1565
	DS238	1567
	DS239	1631
	DS240	1566
NETWORKS	DS1	1397
	DS4	1549
	DS27	1564
	DS37	1396
	DS47	1562
EBW AND ORDNANCE	DS3	1008
PROPELLANT DISPERSION	DS4	1013
	DS9	1010
	DS12	1012
	DS14	1011
	DS19	1009
	DS20	1018
	DS23	1019
	DS27	1020
HYDRAULICS	DS1	1038
	DS2	1044
	DS3	1050
	DS4	1056
	DS5	1042
	DS6	1048
	DS7	1054
	DS8	1060
	DS9	1039
	DS10	1045
	DS11	1051
	DS12	1057
	DS13	1043
	DS14	1049
	DS15	1055
	DS16	1061
	DS17	1040
	DS18	1046
	DS19	1052
	DS20	1058
	DS21	1041

REVISIONS			
SYM	DESCRIPTION	DATE	APPROVAL

PANEL	DS No.	LDO
HYDRAULICS	DS22	1047
	DS23	1053
	DS24	1059
	DS26	1064
	DS27	1065
	DS29	1062
	DS30	1063
MEASURING AND RF	DS2	1030
	DS3	1037
	DS4	1031
	DS8	1034
	DS9	1035
	DS10	1036
	DS12	1028
	DS13	1025
	DS14	1024
	DS15	1027
	DS16	1026
	DS17	1023
	DS20	1032
	DS21	1033
	DS39	1557
LEAK DETECTION AND RECORDER (KSC ONLY)	DS8	1556
	DS9	1628
	DS10	1629

MSFC FORM 422 (VERTICAL) (AUGUST 1960)

NOTICE — When Government drawings, specifications, or other data are used for any purpose other than in connection with a definitely related Government procurement operation, the United States Government thereby incurs no responsibility nor obligation whatsoever; and the fact that the Government may have formulated, furnished, or in any way supplied the said drawings specifications or other data is not to be regarded by implication or otherwise as in any manner licensing the holder or any other person or corporation, or conveying any rights or permission to manufacture, use, or sell any patented invention that may in any way be related thereto.

APPLICATION		PART No.	MF	REVISIONS			
NEXT ASSY	USED ON			SYM	DESCRIPTION	DATE	APPROVAL

AS-503

VERIFICATION PROCEDURE

SIGNAL CONDITIONING TEST (VASC)

73V1617

UNLESS OTHERWISE SPECIFIED DIMENSIONS ARE IN INCHES TOLERANCES ON: FRACTIONS DECIMALS ANGLES	ORIGINAL DATE OF DRAWING 7/22/38 DRAFTSMAN / CHECKER TRACER / CHECKER ENGINEER / ENGINEER	SIGNAL CONDITIONING TEST (VASC) AS-503	GEORGE C. MARSHALL SPACE FLIGHT CENTER NATIONAL AERONAUTICS AND SPACE ADMINISTRATION HUNTSVILLE, ALABAMA
MATERIAL	SUBMITTED G. N. COKER		
HEAT TREATMENT			
FINAL PROTECTIVE FINISH	APPROVED H. B. HARRISON	SCALE / UNIT WT	DWG SIZE A / 73V1617 / SHEET 1 OF 5

REVISIONS			
SYM	DESCRIPTION	DATE	APPROVAL

1.0 SCOPE

THE SIGNAL CONDITIONING TEST PROGRAM SHALL VERIFY THAT THE LDI AND MDI DISCRETES INPUT EQUIPMENT IS CAPABLE OF SENDING ONES AND ZEROS TO THE LCC COMPUTER.

2.0 APPLICABLE GOVERNMENT FURNISHED DOCUMENTS

AESS COMPUTER INTERFACE 40M18344

IBM SYSTEMS PROGRAMMING
CONTRACT NAS8-14000,
KSC SUPPLEMENT NO. 1
SIGNAL CONDITIONING - VASC

3.0 GENERAL NOTES

THE PROGRAM CONSISTS OF TWO PARTS. PART 1 IS THE TEST FOR LDI AND MDI ONES. PART 2 IS THE TEST FOR LDI AND MDI ZEROS.

4.0 PREREQUISITES

4.1 VERIFY THAT THE LCC AND MLF 110A COMPUTER AND THE DDP-224 COMPUTER ARE UP AND SUPPORTING THE OPERATING SYSTEM BEING LOADED.

4.2 ALL POWER, EXCEPT THE COMPUTER POWER, THE +28D121 AND THE +29D121 BUSES, MUST BE "OFF".

4.3 FOR PART 1, ALL MAIN LCC AND MLF INPUT SIGNAL CONDITIONER DISCRETE TEST SWITCHES MUST BE IN THE "ON" (UP) POSITION. FOR PART 2, ALL MAIN LCC AND MLF INPUT SIGNAL CONDITIONER DISCRETE TEST SWITCHES MUST BE IN THE "OFF" (DOWN) POSITION.

5.0 PROCEDURE

5.1 TO CALL UP PART 2, SEE STEP 5.7.

5.2 TO CALL UP PART 1 OF THE PROGRAM, ENTER $TPRQVASC ON THE DISPLAY CONSOLE. THE FOLLOWING MESSAGES WILL BE DISPLAYED:

SIGNAL CONDITIONING TEST
INITIAL VERSION 1/9/67
VERIFY VEHICLE DISCRETE
POWER WILL REMAIN OFF BEFORE PROCEEDING.
VERIFY THAT DISCRETE INPUT
EQUIPMENT IS SENDING ALL
ONES FROM THE LCC SWS.

REVISIONS			
SYM	DESCRIPTION	DATE	APPROVAL

5.3 WHEN THE BUILDING OF THE PROFILE TABLE HAS BEEN COMPLETED, THE FOLLOWING OPTIONS WILL BE DISPLAYED:

a. ENTER $PA TO CHECK ALL LDI SET TO ONES BY THE SWS.

b. ENTER $PA100400 TO BYPASS LDI ONES TEST.

c. ENTER $PT TO TERMINATE

5.4 IF OPTION 1 OR 2 IS SELECTED, THE FOLLOWING MESSAGES WILL BE DISPLAYED:

VERIFY THAT DISCRETE INPUT EQUIPMENT
IS SENDING ALL ONES FROM THE MLC SWS.

5.5 WHEN THE BUILDING OF THE PROFILE TABLE HAS BEEN COMPLETED, THE FOLLOWING OPTIONS WILL BE DISPLAYED:

a. ENTER $PA TO CHECK ALL MDI SET TO ONES BY THE SWS.

b. ENTER $PA101000 TO BYPASS MDI ONES TEST.

c. ENTER $PT TO TERMINATE.

5.6 IF OPTION 1 OR 2 IS SELECTED, THE FOLLOWING MESSAGE WILL BE DISPLAYED:

VA01 DOES THE LDI AND MDI ZEROS TEST.

PART 1 OF THE PROGRAM IS NOW AT THE END AND WILL COME TO A HALT.

5.7 VERIFY ALL MAIN LCC AND MLF INPUT SIGNAL CONDITIONER TEST SWITCHES ARE IN THE "OFF" (DOWN) POSITION.

5.8 ENTER $TPRQVA01 TO CALL UP PART 2 OF THE PROGRAM. THE FOLLOWING MESSAGES WILL BE DISPLAYED:

VA01
INITIAL VERSION, 1/9/67
VERIFY THAT DISCRETE INPUT EQUIPMENT
IS SENDING ALL ZEROS FROM THE LCC SWS.

5.9 VERIFY THAT THE LCC AND MLF INPUT SIGNAL CONDITIONER MAIN DISCRETE TEST SWITCHES ARE IN THE "OFF" (DOWN) POSITION.

5.10 WHEN THE BUILDING OF THE PROFILE TABLE HAS BEEN COMPLETED, THE FOLLOWING OPTIONS WILL BE DISPLAYED:

a. ENTER $PA TO CHECK ALL LDI SET TO ZERO BY THE SWS.

REVISIONS			
SYM	DESCRIPTION	DATE	APPROVAL

5.10 Continued

b. ENTER $PA101200 TO BYPASS LDI ZEROS TEST.

c. ENTER $PT TO TERMINATE.

5.11 IF OPTION 1 OR 2 IS TAKEN, THE FOLLOWING MESSAGES WILL BE DISPLAYED:

VERIFY THAT DISCRETE INPUT EQUIPMENT IS SENDING ALL ZEROS FROM THE MLC SWS.

5.12 WHEN THE BUILDING OF THE PROFILE TABLE HAS BEEN COMPLETED, THE FOLLOWING OPTIONS WILL BE DISPLAYED:

a. ENTER $PA TO CHECK ALL MDI SET TO ZERO BY THE SWS.

b. ENTER $PT TO TERMINATE.

5.13 IF OPTION 1 IS TAKEN, THE FOLLOWING OPTIONS WILL BE DISPLAYED:

a. ENTER $PA TO END NORMALLY.

b. ENTER $PT TO TERMINATE.

6.0 ERROR MESSAGES TEST

6.1 THE FOLLOWING MESSAGE WILL BE DISPLAYED IF AN ERROR OCCURS IN PART 1 DURING THE LDI ONES TEST:

LDI NOT ALL ONES FROM SWS
ENTER $PA100300 TO REPEAT
ENTER $PA TO CONTINUE
ENTER $PA101000TO BYPASS
MDI ONES TEST
ENTER $PT TO TERMINATE TEST

THIS ERROR MAY BE SIMULATED BY PLACING ONE OF THE MAIN LDI INPUT SIGNAL CONDITIONER TEST SWITCHES TO THE "OFF" (DOWN) POSITION.

6.2 THE FOLLOWING MESSAGE WILL BE DISPLAYED IF AN ERROR OCCURS IN PART 1 DURING THE MDI ONES TEST:

MDI NOT ALL ONES FROM SWS
ENTER $PA100700 TO REPEAT
ENTER $PA TO CONTINUE
ENTER $PA101200 TO BYPASS
LDI ZEROS TEST
ENTER $PT TO TERMINATE TEST

REVISIONS			
SYM	DESCRIPTION	DATE	APPROVAL

6.2 (Continued)

THIS ERROR MAY BE SIMULATED BY PLACING ONE OF THE MAIN MDI INPUT SIGNAL CONDITIONER TEST SWITCHES TO THE "OFF" (DOWN) POSITION.

6.3 THE FOLLOWING MESSAGES WILL BE DISPLAYED IF AN ERROR OCCURS IN PART 2 DURING THE LDI ZEROS TEST:

LDI NOT ALL ZEROS FROM SWS
ENTER $PA101100 TO REPEAT
ENTER $PA TO CONTINUE
ENTER $PT TO TERMINATE TEST

THIS ERROR MAY BE SIMULATED BY PLACING ONE OF THE MAIN INPUT SIGNAL CONDITIONER TEST SWITCHES TO THE "ON" (UP) POSITION

6.4 THE FOLLOWING MESSAGES WILL BE DISPLAYED IF AN ERROR OCCURS IN PART 2 DURING THE MDI ZEROS TEST:

MDI NOT ALL ZEROS FROM SWS
ENTER $PA101500 TO REPEAT
ENTER $PA TO END NORMALLY
ENTER $PT TO TERMINATE

6.5 THE ERROR MESSAGES AVAILABLE FOR DISPLAY BY THE PROGRAM ARE LISTED BELOW:

a. LDI NOT ALL ONES FROM SWS
ENTER $PA101300 TO REPEAT
ENTER $PA TO CONTINUE
ENTER $PA10100 TO BYPASS
MDI ONES TEST
ENTER $PT TO TERMINATE TEST

b. MDI NOT ALL ONES FROM SWS
ENTER $PA100700 TO REPEAT
ENTER $PA TO CONTINUE
ENTER $PA101200 TO BYPASS
LDI ZEROS TEST
ENTER $PT TO TERMINATE TEST

c. LDI NOT ALL ZEROS FROM SWS
ENTER $PA10110 TO REPEAT
ENTER $PA TO CONTINUE
ENTER $PT TO TERMINATE TEST

d. MDI NOT ALL ZEROS FROM SWS
ENTER $PA101500 TO REPEAT
ENTER $PA TO END NORMALLY
ENTER $PA TO TERMINATE

MSFC FORM 422 (VERTICAL) (AUGUST 1960)

NOTICE — When Government drawings, specifications, or other data are used for any purpose other than in connection with a definitely related Government procurement operation, the United States Government thereby incurs no responsibility nor obligation whatsoever; and the fact that the Government may have formulated, furnished, or in any way supplied the said drawings specifications or other data is not to be regarded by implication or otherwise as in any manner licensing the holder or any other person or corporation, or conveying any rights or permission to manufacture, use, or sell any patented invention that may in any way be related thereto.

APPLICATION		PART No.	MF	REVISIONS			
NEXT ASSY	USED ON			SYM	DESCRIPTION	DATE	APPROVAL

SA-503

VERIFICATION PROCEDURE

S-IVB POWER DISTRIBUTION TEST XAPD

73V1618

UNLESS OTHERWISE SPECIFIED DIMENSIONS ARE IN INCHES TOLERANCES ON: FRACTIONS DECIMALS ANGLES	ORIGINAL DATE OF DRAWING 6/28/68 DRAFTSMAN / CHECKER TRACER / CHECKER ENGINEER / ENGINEER	S-IVB POWER DISTRIBUTION TEST XAPD AS-503	GEORGE C. MARSHALL SPACE FLIGHT CENTER NATIONAL AERONAUTICS AND SPACE ADMINISTRATION HUNTSVILLE, ALABAMA
MATERIAL	SUBMITTED x A. A. Pape		
HEAT TREATMENT			
FINAL PROTECTIVE FINISH	APPROVED R. A. Drake	SCALE UNIT WT	DWG SIZE A 73V1618 SHEET 1 OF 23

REVISIONS			
SYM	DESCRIPTION	DATE	APPROVAL

1.0 SCOPE

This procedure describes the instructions to verify the IBM Test Program, S-IVB Power Distribution Test (XAPD).

2.0 APPLICABLE GOVERNMENT FURNISHED DOCUMENTS

2.1 40M13870 Advanced Electrical System Schematics, S-IVB ESE Saturn V

2.2 VT1-064 IBM KSC Supplement No. 1 Dated 6/30/67

3.0 GENERAL NOTES

The test program will be called and executed as described in the KSC Supplement, Section 2.2. Each option will be exercised (if applicable) and hardwire stimulation checked.

4.0 PREREQUISITES

4.1 S-IC S-II powered up.

4.2 S-IVB powered up and ready for power transfer.

4.3 IU powered up (ground power).

4.4 All telemetry and DDAS on line and supporting.

4.5 Verify LVDA/ESE switch in the ESE position.

4.6 On the S-IVB Meas. & RF Panel, verify the following:

4.6.1 C/O Meas. Group (S-28) - AUTO

4.6.2 Issue MDO 1700 "ON" from the display console and verify that C/O Meas. Group Pwr. On (DS-19) is ON.

4.6.3 TM RF Group (S-26) - AUTO

4.6.4 Flight Meas. Enable (S-31) - AUTO.

4.6.5 Issue MDO 1704 "ON" from the display console and verify that Flight Meas. Gnd. Enabled (DS-22) is ON.

4.7 On the S-IVB Networks Panel, verify the following:

4.7.1 Simulated Flight (S-28) - ON

4.7.2 Malfunction Reset (S-25) - OFF

4.8 On the S-IVB EBW and Ordnance Panel, verify that Enable/Disable (S-3) is in the "Disable" position.

4.9 On the S-IVB Hydraulics Panel, verify that Aux. Hyd. Pump Power (S-3) is "OFF".

REVISIONS			
SYM	DESCRIPTION	DATE	APPROVAL

5.0 Procedure

5.1 Test Program "S-IVB Power Distribution Test" (XAPD) will be called into high speed memory from Sanders Display Consoles 1 or 2. It will be called up and executed per section 2.2 of the IBM KSC Supplement No. 1.

5.2 If an error message is displayed indicating incorrect feedback, the test engineer should recycle as described by the display. If the error still exists after recycle, the program should be halted, the problem determined and resolved, then recycle once more.

6.0 ERROR MESSAGE TEST

6.1 Special Prerequisites

6.1.1 Prior to powering up the S-IVB, install the following breakout boxes:

BOB #1 between 404A70A1J2 and 404A3W1P30
BOB #2 between 404A70A1J3 and 404A3W1P31

Both breakout boxes have all jumpers installed.

6.1.2 Verify that the S-IVB has been powered per Sections 6.2 and 6.3 of the S-IVB Power-Up Operating Procedure, 80X0401.

6.2 Call XAPD per Section 2.2 of KSC Supplement No. 1. Take option to set breakpoints for Part I.

6.3 On S-IVB Engine Test Panel, place Cutoff Sensor Power (S-33) - OFF.

6.4 Enter $PA001200. The following will be displayed:

"LEVEL SENSOR POWER ON SND. ***OFF***
SHOULD BE ON ***

6.5 On Engine Test Panel, place Cutoff Sensor Power (S-33) to AUTO and Sim. Wet (S-34) to OFF, Sim. Wet (S-35) - OFF and Sim. Wet (S-36) - OFF. Enter $PA001300.

6.6 The following should be displayed:

LH SENSOR 1 WET INDICATOR ***OFF*** SHOULD BE ON
LH SENSOR 2 WET INDICATOR ***OFF*** SHOULD BE ON
LH SENSOR 3 WET INDICATOR ***OFF*** SHOULD BE ON

Review Printout to determine which LH Sensor/S failed to indicate Wet.

6.7 On Eng. Test Panel, place the following switches to AUTO. Sim. Wet (S-34), Sim. Wet (S-35), Sim Wet (2-36). Place the following switches to "OFF": Sim. Wet (S-38), Sim. Wet (S-39), and Sim. Wet (S-40). Enter $PA001600.

REVISIONS			
SYM	DESCRIPTION	DATE	APPROVAL

6.8 The following should be displayed:

LOX SENSOR 1 WET INDICATOR *** OFF *** SHOULD BE ON.
LOX SENSOR 2 WET INDICATOR *** OFF *** SHOULD BE ON.
LOX SENSOR 3 WET INDICATOR *** OFF *** SHOULD BE ON.

REVIEW PRINTOUT TO DETERMINE WHICH LOX LEVEL SENSOR/S FAILED TO INDICATE WET.

6.9 On the Eng. Test Panel place the following switches to "AUTO".

Sim. Wet (S-38), Sim. Wet (s-39), Sim. Wet (S-40).

Place Engine Control Power (S-1) to "OFF". Enter $PA.

6.10 The following will be displayed:

ENG. CONT. PWR. INDICATION *** OFF *** SHOULD BE ON.

6.11 Enter $PA.

The following will be displayed:

ENG. CONT. - BUS. SHOULD BE 28±2 VDC
(4 667 ± 0.333 VDC On PCM Scale) PCM
Reading is 0.0 VDC.

6.12 On the Engine Test Panel place Engine Control Power (S-1) to "AUTO". Remove pin HH from BOB #1. Switch Selector Cutoff (S-24) ON the AUTO. Enter $PA004400. The following will be displayed:

ENG. CUTOFF IND. (MDI-2766) *** ON *** SHOULD BE OFF ***

6.13 On the Engine Test Panel place Simulate (S-38) to WET. Replace pin HH in BOB#1. Enter $PA.

The following will be displayed;

LOX SENSOR 1 WET IND (MDI-1931) FAILED TO GO OFF.

6.14 Place Simulate (S-38) to AUTO and enter $PA007600.

The following will be displayed;

OUT OF SEQUENCE ENGINE CUTOFF HAS OCCURRED.

6.15 Place Switch Selector Cutoff (S-24) OFF the AUTO and Simulate (S-39) to WET. Enter $PA009500. The following will be displayed:

LOX SENSOR 2 WET IND FAILED TO GO OFF.

6.16 Enter $PA.

The following will be displayed:

REVISIONS			
SYM	DESCRIPTION	DATE	APPROVAL

ENGINE CUTOFF FAILED TO INDICATE ON. LOX SENSORS 1 AND 2 ARE DRY. NON-PROGRAMMED ENGINE CUTOFF FAILED TO INDICATE ON. LOX SENSORS 1 AND 2 ARE DRY.

6.17 Place Simulate (S-39) to OFF. Enter $PA. The following will be displayed:

LOX SENSOR 2 WET INDICATOR FAILED TO INDICATE ON.

6.18 Place Simulate (S-39) to AUTO and Simulate (S-40) ON. Enter $PA010900. The following will be displayed:

LOX SENSOR 3 WET INDICATOR FAILED TO GO OFF.

6.19 Enter $PA. The following will be displayed:

ENGINE CUTOFF FAILED TO IND. ON. LOX SENS 1 AND 3 ARE DRY.

6.20 Place Simulate (S-40) to AUTO and Simulate (S-38) OFF. Enter $PA011400. The following will be displayed:

LOX SENSOR 1 WET INDICATOR FAILED TO INDICATE ON.

6.21 Place Simulate (S-38) to AUTO and Simulate (S-39) to ON. Enter $PA012100. The following will be displayed:

LOX SENSOR 2 WET INDICATOR FAILED TO INDICATE OFF.

6.22 Enter $PA. The following will be displayed:

ENGINE CUTOFF FAILED TO IND. ON.
LOX SENS 2 AND 3 ARE DRY.

6.23 Place Simulate (S-38) to ON and enter $PA. The following will be displayed:

LOX SENSOR 1 WET INDICATOR FAILED TO INDICATE OFF.
ENG CUTOFF FAILED TO IND ON. LOX SENS 1,2, AND 3 ARE DRY.

6.24 Place both Simulate (S-38) and Simulate (S-39) to AUTO.
Place both Simulate (S-34) and Simulate (S-35) to ON.
Enter $PA012600. The following will be displayed:

LH SENSOR 1 WET INDICATOR FAILED TO GO OFF.
LH SENSOR 2 WET INDICATOR FAILED TO GO OFF.

6.25 Place Switch Selector Cutoff (S-24) ON then AUTO . Enter $PA014700. The following will be displayed:

OUT OF SEQUENCE ENGINE CUTOFF HAS OCCURRED.

6.26 Place Switch Selector Cutoff (S-24) OFF the AUTO. Enter $PA015900.

6.27 The following will be displayed:

REVISIONS			
SYM	DESCRIPTION	DATE	APPROVAL

ENGINE CUTOFF FAILED TO INDICATE ON. LH SENSORS 1 AND 2 ARE DRY. NON-PROGRAMMED CUTOFF FAILED TO INDICATE ON. LH SENSORS 1 AND 2 ARE DRY.

6.28 Place Simulate (S-35) OFF. Enter $PA. The following will be displayed:

LH SENSOR 2 WET INDICATOR FAILED TO INDICATE ON.

6.29 Place Simulate (S-36) to WET. Enter $PA017300. The following will be displayed:

LH SENSOR 3 WET INDICATOR FAILED TO GO OFF.

6.30 Enter $PA. The following will be displayed:

ENG. CUTOFF FAILED TO IND. ON. LH SENSORS 1 AND 3 ARE DRY.

6.31 Place Simulate (S-34) OFF and both Simulate (S-35) and Simulate (S-36) to AUTO. Enter $PA0151. The following will be displayed:

LH SENSOR 1 WET INDICATOR FAILED TO INDICATE ON.

6.32 Place Simulate (S-35) to Sim. and enter $PA. The following will be displayed;

LH SENSOR 2 WET INDICATOR FAILED TO INDICATE OFF.

6.33 Enter $PA. The following will be displayed:

ENG CUTOFF FAILED TO IND. ON.
LH SENSORS 2 AND 3 ARE DRY.

6.34 Place Simulate (S-34) to Sim. and Simulate (S-35) to AUTO. Enter $PA018000. The following will be displayed:

LH SENSOR 1 WET INDICATOR FAILED TO INDICATE OFF.

6.35 Place Simulate (S-35) to Sim. and enter $PA. The following will be displayed:

ENG CUTOFF FAILED TO INDICATE ON.
LH SENSORS 1,2, AND 3 ARE DRY.

6.36 Place the following switches ON:

6.36.1 POWER (S-33)
6.36.2 Simulate (S-38)
6.36.3 Simulate (S-39)
6.36.4 Simulate (S-40)

Place both Simulate (S-34) and Simulate (S-35) to AUTO. Remove pin D from BOB # 2.

REVISIONS			
SYM	DESCRIPTION	DATE	APPROVAL

6.37 Enter $PA019200. The following will be displayed:

LOX SENSOR 1 WET INDICATOR FAILED TO GO OFF.
LOX SENSOR 2 WET INDICATOR FIALED TO GO OFF.
LOX SENSOR 3 WET INDICATOR FAILED TO GO OFF.
LEVEL SENSOR PWR. ON IND. FAILED TO GO OFF.
*** XAPD IN SEMI MODE ***

6.38 Enter $PA. The following will be displayed:

NON-PROGRAMMED ENGINE CUTOFF *** ON *** SHOULD BE OFF ***.

6.39 Place the following switches to AUTO:

6.39.1 Power (S-33)
6.39.2 Simulate (S-38)
6.39.3 Simulate (S-39)
6.39.4 Simulate (S-40)

Remove pin KK from BOB #1.
Replace pin D in BOB #2.

6.40 Enter $PA020200. The following will be displayed:

ENGINE CUTOFF INDICATOR FAILED TO INDICATE ON.

Replace pin KK in BOB #1.

6.41 On the S-IVB Engine Test Panel place Engine Ignition Power (S2) OFF.

Enter $PA022400. The following will be displayed:

ENGINE IGNITION POWER FAILED TO INDICATE ON
ENGINE IGNITION BUS SHOULD BE 28 $\pm$ 2VDC
(4.667 $\pm$ 0.333 ON PCM SCALE). READING IS 0.0.

*** XAPD IN SEMI MODE ***
REVIEW DISPLAYED CONDITIONS

6.42 Place the following switches ON:

6.42.1 Engine Control Power (S-1)

6.42.2 Engine Ignition Power (S-2)

Enter $PA024300. The following will be displayed:

REVISIONS			
SYM	DESCRIPTION	DATE	APPROVAL

ENGINE IGNITION POWER FAILED TO INDICATE OFF

6.43 Place Engine Ignition Power (S-2) to AUTO. Enter $PA024300. The following will be displayed:

ENGINE CONTROL POWER FAILED TO GO OFF.

6.44 Place Engine Control Power (S-1) to AUTO and enter $PA026600. The following will be displayed:

ENGINE CUTOFF TEST COMPLETE
XAPD IN SEMI MODE AT BREAKPOINT 2

6.45 Remove pin t from BOB #1. Enter $PA. The following will be displayed:

BEGIN P.U. AND APS POWER CIRCUITS AND SWITCH
SELECTOR CIRCUITS TEST
P.U. OVEN AND INVERTER POWER ON INDICATOR
FAILED TO GO ON.

6.46 Replace pin t in BOB #1 and remove pin BB from BOB #1. Enter $PA027200. The following will be displayed:

--- P.U. OVEN AND INVERTER POWER ON IND. FAILED TO GO OFF.
*** XAPD IN SEMI MODE ***

6.47 Replace pin BB in BOB #1 and remove pins g and L. Enter $PA027200. The following will be displayed:

P.U. ACTIVATE ON FAILED TO INDICATE ON
P.U. ACTIVATE ON INDICATOR FAILED TO INDICATE ON*C*
FUEL BOILOFF BIAS ON IND. FAILED TO INDICATE ON
FUEL BOILOFF BIAS ON IND. FAILED TO INDICATE ON * C *
*** XAPD IN SEMI MODE ***

6.48 Replace pins L and g in BOB #1 and remove pins P and s. Enter $PA029200. The following will be displayed:

P.U. ACTICATE ON INDICATOR FAILED TO GO OFF
P.U. ACTIVATE ON INDICATOR FAILED TO GO OFF * C *
FUEL BOILOFF BIAS ON IND, FAILED TO GO OFF
FUEL BOILOFF BIAS ON IND. FAILED TO GO OFF * C *

6.49 Replace pins P and s in BOB #1 remove pin f from BOB #1 and pin s from BOB #2. On APS Launch & Monitor Panel place Power (S-44) OFF. Enter $PA. The following will be displayed:

70 LB ULLAGE ENGINE RELAY RESET IND. FAILED TO GO OFF
70 LB ULLAGE ENG RELAY RESET IND FAILED TO GO OFF * C *
70 LB ULLAGE ENGINE RELAY RESET IND FAILED TO GO OFF.
70 LB ULLAGE ENG RELAY RESET IND RAILED TO GO OFF * C *.

REVISIONS			
SYM	DESCRIPTION	DATE	APPROVAL

APS 1 VALVE POWER ON IND. FAILED TO INDICATE ON
APS 2 VALVE POWER ON IND. FAILED TO INDICATE ON.

6.50 Replace pin f in BOB #1 and pin s in BOB #2. On APS Launch and Monitor Panel place Power (S-44) ON. Remove pin h from BOB #1 and pin t from BOB #2. Enter $PA035800. The following will be displayed:

70 LB ULLAGE ENGINE RELAY RESET IND FAILED TO IND ON * C *
70 LB ULLAGE ENGINE RELAY RESET IND. FAILED TO IND ON
70 LB ULLAGE ENG RELAY RESET IND FAILED TO IND ON * C *

APS 1 VALVE POWER ON IND FAILED TO INDICATE OFF
ASP 2 VALVE POWER ON IND FAILED TO INDICATE OFF.

6.51 Replace pin h in BOB #1 and Pin t in BOB #2. On APS Launch and Monitor Panel place power (S-44) to AUTO. Enter $PA. The following will be displayed:

P.U. AND A.P.S PWR CIRCUITS AND SWSEL CIRCUITS TEST HAS BEEN COMPLETED. XAPD IN SEMI AT BREAKPOINT 3.

6.52 On the S-IVB Measuring and R.F Panel place both Mode Selects (S-26) and (S-27) to the ANTENNA position. Enter $PA . The following will be displayed:

BEGIN R.F. POWER SWITCH SELECTOR AND SILENCE CIRCUITS TEST
F 1/F3 COAX TO DUMMY LOAD FAILED
F2/S1/P1 COAX TO DUMMY LOAD FAILED
**** CAUTION ****
DO NOT PROCEED UNTIL THIS CONDITION IS CORRECTED.

6.53 Place both TM Mode Selects (S-26) and (S-27) to the AUTO position. Remove pin M from BOB #1. Enter $PA040100. The following will be displayed:

FLT. XMTR GROUP ON INDICATOR FAILED TO INDICATE ON

6.54 Replace pin M in BOB #1 and remove pin N from same. Turn ON all S-IVB telemeters. Enter $PA040300. The following will be displayed:

FLT. XMTR GROUP CAUSED EXCESSIVE CURRENT ON 40311 BUS. CURRENT SHOULD BE LESS THAN 52 ADC (1.733 VDC ON PCM SCALE) SCALE READING IS FLT. XMTR GROUP ON INDICATOR FAILED TO GO OFF MANUALLY PUT STAGE POWER SWITCH IN THE OFF POSITION. CORRECT CAUSE OF EXCESSIVE CURRENT AND PUT STAGE POWER SWITCH IN THE ON POSITION BEFORE TAKING EITHER OF THE FOLLOWING OPTIONS:

Turn off all s-IVB TELEMTERS.

6.55 Replace pin N in BOB #1 and remove pin M from same. Enter $PA. The following will be displayed:

FLIGHT XMTR GROUP ON IND. FAILED TO INDICATE ON * C *

REVISIONS			
SYM	DESCRIPTION	DATE	APPROVAL

6.56 Replace pin M in BOB #1 and remove pin CC from same. The following will be displayed after entering $PA.

ORBIT XMTR GROUP ON IND. FAILED TO INDICATE ON

6.57 Replace pin CC in BOB #1 and remove pin NN from same. Turn on all S-IVB telemeters. Enter $PA043000. The following will be displayed:

ORBIT XMTR GROUP CAUSED EXCESSIVE CURRENT ON 4D311 BUS. CURRENT SHOULD BE LESS THAN 64ADC (2.133 VDC ON PCM SCALE) SCALE READING IS ------ ORBIT XMTR GROUP ON IND. FAILED TO GO OFF *C*

6.58 Turn OFF all S-IVB telemeters. Replace pin NN in BOB #1 and remove pin CC. Enter $PA. The following will be displayed:

ORBIT XMTR GROUP ON IND. FAILED TO INDICATE ON. * C *

6.59 Replace pin CC in BOB #1 and remove pin R from same. Enter $PA. The following will be displayed:

SSB XMTR GROUP ON INDICATOR FAILED TO INDICATE ON

6.60 Replace pin R in BOB #1 and remove pin V from same. Turn on all S-IVB telemeters. Upon entering $PA045500, the following will be displayed;

SSB XMTR GROUP CAUSED EXCESSIVE CURRENT ON 4D311 BUS. CURRENT SHOULD BE LESS THAN 70ADC (2-33VDC ON PCM SCALE) SCALE READING IS ---- SSB XMTR GROUP ON INDICATOR FAILED TO GO OFF * C *

6.61 Replace pin V in BOB #1 and remove pin R from same. Turn off all S-IVB telemeters. Enter $PA. The following will be displayed:

SSB XMTR GROUP ON IND. FAILED TO INDICATE ON *C*

6.62 Replace pin R in BOB #1 and remove pin w from same. Enter $PA. The following will be displayed:

FLIGHT SCO GROUP ON IND. FAILED TO INDICATE ON

6.63 Replace pin w in BOB #1 and remove pin y from same. Turn on all S-IVB telemeters. Enter $PA048000. The following will be displayed:

FLIGHT SCO GROUP CAUSED EXCESSIVE CURRENT ON 4D311 BUS. CURRENT SHOULD BE LESS THAN 73 ADC (2-433 VDC ON PCM SCALE) SCALE READING IS---- FLIGHT SCO GROUP ON IND. FAILED TO GO OFF * C *

6.64 Turn off all S-IVB telemeters except SCO group. Enter $PA. The following will be displayed:

FLIGHT SCO GROUP IND. FAILED TO GO OFF

REVISIONS			
SYM	DESCRIPTION	DATE	APPROVAL

6.65 Replace pin y in BOB #1 and remove pins w, Z, & e from same. Manually turn OFF SCO Group. Enter $PA050000. The following will be displayed:

FLIGHT SCO GROUP ON IND. FAILED TO INDICATE ON

6.66 Enter $PA. The following will be displayed:

SSB GROUP ON INDICATOR FAILED TO INDICATE ON

6.67 Replace pin Z in BOB #1. Turn on all S-IVB telemeters. The following will be displayed after entering $PA051300:

SSB GROUP CAUSED EXCESSIVE CURRENT ON 4D311 BUS. CURRENT SHOULD BE LESS THAN 75 ADC (2.5 VDC ON PCM SCALE). SCALE READING IS --- SSB GROUP ON INDICATOR FAILED TO GO OFF * C *

6.69 Enter $PA. The following will be displayed:

SSB GROUP INDICATOR FAILED TO GO OFF.

6.70 Replace pin e in BOB # 1. Turn OFF all S-IVB telemeters. Enter $PA. The following will be displayed:

FMI XMTR OUTPUT PWR SHOULD BE GREATER THAN 15 WATTS (2.586 ON PCM SCALE) SCALE READING IS 0.0 (IF NOT DISPLAYED ENTER $PA055100)

FM2 XMTR OUTPUT PER SHOULD BE GREATER THAN 15 WATTS (2-586 VDC ON PCM SCALE) SCALE READING IS 0.0

FM3 XMTR OUTPUT PWR SHOULD BE GREATER THAN 15 WATTS (2.586 VDC ON PCM SCALE) SCALE READING IS 0.0 (IF NOT DISPLAYED ENTER $PA056400)

PCM XMTR OUTPUT PWR SHOULD BE GREATER THAN 15 WATTS (2.586 VDC ON PCM SCALE) SCALE READING IS 0.0

SSB XMTR OUTPUT PWR SHOULD BE GREATER THAN 15 WATTS (2.586 ON PCM SCALE) SCALE READING IS ---- (IF NOT DISPLAYED ENTER $PA057800)

6.71 Turn on all S-IVB telemeters. Enter $PA. The following will be displayed:

MANUALLY PUT THE RF SILENCE SWITCH ...etc.
VERIFY THAT RF SILENCE IS OFF.

6.72 Enter $PA. The following will be displayed:

RF SILENCE INDICATOR FAILED TO INDICATE ON
SSB XMTR ON INDICATOR FAILED TO GO OFF
XMTR FMI OUTPUT PWR SHOULD BE LESS THAN 1.45 WATTS

REVISIONS			
SYM	DESCRIPTION	DATE	APPROVAL

(.250 VDC ON PCM SCALE) SCALE READING IS ---

XMTR FM2 OUTPUT PWR SHOULD BE LESS THAN 1.45 WATTS
(.250 VDC ON PCM SCALE) SCALE READING IS ---

XMTR FM3 OUTPUT PWR SHOULD BE LESS THAN 1.45 WATTS
(.250 VDC ON PCM SCALE) SCALE READING IS---

PCM XMTR OUTPUT PWR SHOULD BE LESS THAN 1.45 WATTS
(.250 VDC ON PCM SCALE) SCALE READING IS ---

SSB XMTR OUTPUT PWR SHOULD BE LESS THAN 1.45 WATTS
(.250 VDC ON PCM SCALE) SCALE READING IS ---
FOR RETEST OF XMTR OUTPUT ...ETC.

6.73 Remove the following pins from BOB #1; pins N, V, and NN. Enter $PA. The following will be displayed:

TO CONTINUE TEST - MANUALLY PUT RF SILENCE... ETC.

6.74 Enter $PA. The following will be displayed:

FLIGHT XMTR GROUP ON IND. FAILED TO GO OFF.

ORBIT XMTR GROUP ON IND. FAILED TO GO OFF

SSB XMTR GROUP ON INDICATOR FAILED TO GO OFF

*** CAUTION ***

DO NOT PROCEDD UNTIL ALL TRANSMITTERS ...ETC.

6.75 Replace pins N, V, and NN in BOB #1. Turn OFF all S-IVB telemeters. Verify that RF Silence is ON. Enter $PA061700. The following will be displayed:

RF SILENCE INDICATOR FAILED TO GO OFF

SSB XMTR ON INDICATOR FAILED TO INDICATE ON

6.76 Verify that RF Silence is off. On the S-IVB Meas. and RF Panel place MODE SELECT (S-27) to the COAX position and mode selector (S26) to the COAX position. Enter $PA. The following will be displayed:

TM MODE F1/F3 OFF COMMAND FAILED

TM MODE F2/S1/P1 OFF COMMAND FAILED

REVIEW PRINTOUT TO DETERMINE FAILURE MODE OF COAX

6.77 Enter $PA. The following will be displayed:

RF POWER, SW SELECTOR AND SILENCE CIRCUITS TEST
HAS BEEN COMPLETED.

REVISIONS			
SYM	DESCRIPTION	DATE	APPROVAL

6.78 Turn on all S-IVB telemeters. Remove the following pins from BOB #1: V, NN, N, e, y. Enter $PA700000 for B4 to B3. The following will be displayed:

SSB XMTR GROUP ON INDICATOR FAILED TO GO OFF.

ORBIT XMTR GROUP ON IND. FAILED TO GO OFF

FLIGHT XMTR GROUP ON IND. FAILED TO GO OFF

FLIGHT SCO GROUP ON IND, FAILED TO GO OFF

SSB GROUP ON INDICATOR FAILED TO GO OFF

*** CAUTION ***

DO NOT PROCEED UNTIL ALL TRANSMITTERS ARE VERIFIED
IN THE OFF STATE

6.79 Verify: MODE SELECT (S-26) COAX and MODE SELECT (S-27) COAX. Enter $PA. The following will be displayed:

F2/S1/P1 T/M MODE OFF FAILED

F1/F3 TM MODE OFF FAILED. BACKUP B4 TO B3 HAS BEEN COMPLETED.
REVIEW PRINTOUT ...etc.
MANUALLY PUT RF SILENCE SWITCH IN OFF POSITION.

6.80 Replace the following pins in BOB #1: V,NN,N,e, and y. Remove the following pins from BOB #1: BB,s,P,h. Remove the following pin from BOB #2: t. Turn OFF all S-IVB telemeters. Verify MODE SELECT (S-26) - AUTO and MODE SELECT (S-27) - AUTO. Turn ON the following:

6.80.1 P.U. OVEN AND INVERTER

6.80.2 P.U. ACTIVATE

6.80.3 FUEL BOIL OFF BIAS

6.80.4 APS VALVE POWER

6.81 MANUALLY issue S-IVB Channels 42 and 101 from Switch Selector Manual Panel. Enter $PA750000. The following will be displayed:

B3 to B2 BACKUP IS IN EXECUTION

P.U. OVEN AND INVERTER POWER ON IND. FAILED TO GO OFF

P.U. ACTIVATE INDICATOR FAILED TO GO OFF
FUEL BOILOFF BIAS INDICATOR FAILED TO GO OFF

REVISIONS			
SYM	DESCRIPTION	DATE	APPROVAL

70 LB ULLAGE ENGINE RELAY RESET IND FAILED TO GO ON

APS 1 VALVE PWR ON IND FAILED TO GO OFF
APS 2 VALVE PWR ON IND FAILED TO GO OFF

6.82 Replace the following pins in BOB #1: BB, P, s, and h
Replace pin t on BOB #2. Turn OFF the items which were turned ON in steps 79.1 thru 79.4. Issue S-IVB Channels 102 and 43 from the Manual Switch Selector Panel.
On the S-IVB Engine Test Panel perform the following :

6.82.1 ENGINE CONTROL POWER (S-1) - ON

6.82.2 ENGINE IGNITION POWER (S-2) - ON

6.82.3 CUTOFF SENSOR POWER (S-33) - ON

6.82.4 LH SENSOR NO. 1 (S-34) - SIM. WET

6.82.5 LH SENSOR NO.2 (S-35) - SIM. WET

6.82.6 LH SENSOR NO.3 (S-36) - SIM. WET

6.82.7 LOX SENSOR NO. 1 (S-38) - SIM. WET

6.82.8 LOX SENSOR NO. 2 (S-39) - SIM. WET

6.82.9 LOX SENSOR NO. 3 (S-40) - SIM. WET

Enter $PA785000. The following will be displayed:

B2 to B1 BACKUP IS IN EXECUTION
LOX SENSOR 1 WET INDICATOR FAILED TO GO OFF
LOX SENSOR 2 WET INDICATOR FAILED TO GO OFF
LOX SENSOR 3 WET INDICATOR FAILED TO GO OFF
LH SENSOR 1 WET INDICATOR FAILED TO GO OFF
LH SENSOR 2 WET INDICATOR FAILED TO GO OFF
LH SENSOR 3 WET INDICATOR FAILED TO GO OFF

ENGINE IGNITION PWR ON IND. FAILED TO GO OFF
CUTOFF SENSOR PWR ON IND, FAILED TO GO OFF
ENGINE CONTROL PWR ON IND. FAILED TO GO OFF
BACKUP B2 TO B1 HAS BEEN COMPLETED

6.83 Verify that the switches called out in steps 6.82.1 thru 6.82.10 have been returned to the AUTO position.

Enter $PA 000330. The following will be displayed:

*****CAUTION*****

Disconnect P14 of cable 411W200 from tape receiver (411A84A203) and verify chilldown pump simulators are installed.

REVISIONS			
SYM	DESCRIPTION	DATE	APPROVAL

6.84 On the S-IVB EBW and Ordnance Panel place ullage Rocket F/U (S-3) to ENABLE. Enter $PA. The following will be displayed:

*** CAUTION ***

ULLAGE ROCKETS FIRING UNITS ENABLED INDICATOR
*** ON *** SHOULD BE OFF *** DO NOT CONTINUE
UNTIL CONDITION CORRECTED.

6.85 Remove the following pins from BOB # 2: A,B,q, and C. Enter $PA. The following will be displayed:

ULLAGE ROCKET PILOT RELAYS RESET INDICATOR * C *
*** ON *** SHOULD BE OFF ***

The preceding messages will be displayed a total of four times.

6.86 Replace pins A,B,C, and q in BOB #2. Remove pins JJ and V from BOB #2. Enter $PA001200. The following will be displayed a total of four times:

ULLAGE ROCKET PILOT RELAYS RESET INDICATOR
*** OFF *** SHOULD BE ON ***

ULLAGE ROCKET PILOT RELAYS RESET INDICATOR
C ***OFF*** SHOULD BE ON ***

6.87 Replace pins JJ and U in BOB #2. Remove pin FF from BOB #1 and pin W from BOB #2. Enter $PA004900. The following will be displayed twice:

ENGINE START PILOT RELAYS INDICATOR *** ON ***
SHOULD BE OFF ***
ENGINE START PILOT RELAYS INDICATOR * C * *** ON ***
SHOULD BE OFF ***

6.88 Replace pin FF in BOB #1 and pin W in BOB #2. Remove pin z from BOB #1 and pin X from BOB #2. Enter $PA009710. The following will be displayed twice:

ENGINE START PILOT RELAYS INDICATOR *** OFF *** SHOULD
BE ON ***
ENGINE START PILOT RELAYS INDICATOR * C * *** OFF ***
SHOULD BE ON ***

6.89 Replace pin z in BOB #1 and pin X in BOB #2. Remove pin i from BOB #1 and pin v from BOB #2. Enter $PA. The following will be displayed twice

LOX FLT PRESSURE AND COAST PERIOD RELAY RESET IND *** ON ***
SHOULD BE OFF ***

REVISIONS			
SYM	DESCRIPTION	DATE	APPROVAL

LOX FLT PRESSURE AND COAST PERIOD RELAY RESET IND. *C*
*** ON *** SHOULD BE OFF.

6.90 Replace pin i in BOB #1 and pin v in BOB #2. Remove pin j from BOB #1 and pin z from BOB #2. Enter $PA014000. The following will be displayed twice:

LOX FLT PRESSURE AND COAST PERIOD RELAY RESET IND.
*** OFF *** SHOULD BE ON.

LOX FLT PRESSURE AND COAST PERIOD RELAY RESET IND. * C *
*** OFF *** SHOULD BE ON.

6.91 Replace pin j in BOB #1 and pin z in BOB #2. Remove pins K and y from BOB #2. Enter $PA014000. The following will be displayed twice:

PLAYBACK ON INDICATOR *** OFF *** SHOULD BE ON

PLAYBACK ON INDICATOR *** OFF *** SHOULD BE ON * C *

6.92 Replace pins K and y in BOB #2. Remove pins M and CC from BOB #2. Enter $PA018310. The following will be displayed twice:

PLAYBACK ON INDICATOR *** ON *** SHOULD BE OFF

PLAYBACK ON INDICATOR * C * *** ON *** SHOULD BE OFF

6.93 Replace pins M and CC in BOB #2. Remove pin G from BOB #2. Enter $PA018310. The following will be displayed:

IN-FLIGHT RELAYS GROUP ON INDICATOR *** OFF *** SHOULD
BE ON

IN-FLIGHT RELAYS GROUP ON INDICATOR *** OFF *** SHOULD
BE ON * C *

6.94 Replace pin G in BOB #2. Remove pin Y from BOB #2. Enter $PA022600. The following will be displayed:

IN-FLIGHT RELAYS GROUP ON INDICATOR *** ON *** SHOULD BE OFF

IN-FLIGHT RELAYS GROUP ON INDICATOR * C * *** ON *** SHOULD
BE OFF

6.95 Replace pin Y in BOB #2. Remove pins H and x from BOB #1. Remove pin HH from BOB #2. Enter $PA. The following will be displayed:

SLOW RECORD ON INDICATOR *** OFF *** SHOULD BE ON
SLOW RECORD ON INDICATOR *C* *** OFF *** SHOULD BE ON

RECORDER BYPASS IND *** OFF *** SHOULD BE ON
RECORDER BYPASS IND * C * *** OFF *** SHOULD BE ON

REVISIONS			
SYM	DESCRIPTION	DATE	APPROVAL

FAST RECORD ON INDICATOR *** OFF *** SHOULD BE ON
FAST RECORD ON INDICATOR * C * *** OFF *** SHOULD BE ON

6.96 Replace pins H and x in BOB #1. Replace pin HH in BOB #2. Remove pin K from BOB #1. Remove pins f and J from BOB #2. Enter $PA024900. The following will be displayed:

SLOW RECORD ON INDICATOR *** ON *** SHOULD BE OFF
SLOW RECORD ON INDICATOR *C* *** ON *** SHOULD BE OFF

RECORDER BYPASS IND *** ON *** SHOULD BE OFF
RECORDER BYPASS IND *C* *** ON *** SHOULD BE OFF

FAST RECORD ON INDICATOR *** ON *** SHOULD BE OFF
FAST RECORD ON INDICATOR *C* *** ON *** SHOULD BE OFF

6.97 Replace pin K in BOB #1. Replace pins f and J in BOB #2. Remove pins EE and AA from BOB #1. On the S-IVB Hydraulics panel turn Power (S-3) ON. Enter $PA024900. The following will be displayed:

AUX HYD PUMP COAST MODE RELAY RESET

AUX HYD PUMP COAST MODE RELAY RESET INDICATOR * C *
*** ON *** SHOULD BE OFF
AUX HYD PUMP ON INDICATOR * C *
*** ON *** SHOULD BE OFF
AUX HYD PUMP FLIGHT MODE RELAY RESET INDICATOR
*** ON *** SHOULD BE OFF
AUX HYD PUMP PWR ON IND *** ON *** SHOULD BE OFF

AUX HYD PUMP FLIGHT MODE RELAY RESET INDICATOR * C *
*** ON *** SHOULD BE OFF
AUX HYD PUMP PWR ON IND * C *
** ON *** SHOULD BE OFF

6.98 Replace pins AA and EE in BOB #1. Remove pins DD and GG from BOB #1. On S-IVB Hydraulics Panel place Power (S-3) OFF and verify that AUX. Hyd. Pump Power ON (DS-3) is OFF. The following will be displayed :

AUX HYD PUMP COAST MODE RELAY RESET INDICATOR
*** OFF *** SHOULD BE ON

AUX HYD PUMP COAST MODE RELAY RESET INDICATOR * C *
*** OFF *** SHOULD BE ON
AUX HYD PUMP POWER ON IND. *** OFF *** SHOULD BE ON
AUX HYD PUMP FLIGHT MODE RELAY RESET INDICATOR
*** OFF *** SHOULD BE ON
AUX HYD PUMP POWER ON IND. *** OFF *** SHOULD BE ON
AUX HYD PUMP FLIGHT FRLAY RESET INDICATOR * C *
*** OFF *** SHOULD BE ON

6.99 Replace pins DD and GG in BOB #1. Remove pin j FROM BOB #1. Replace fuse B202-1129A10A3 J3/N. On the S-IVB Hydraulics Panel, place Power (S3) to AUTO. Enter $PA.

REVISIONS			
SYM	DESCRIPTION	DATE	APPROVAL

The following will be displayed:
LOX CHILLDOWN INV PWR ON IND *** OFF *** SHOULD BE ON

LOX CHILLDOEN INVERTER PILOT RELAY RESET INDICATOR
*** ON *** SHOULD BE OFF

CURRENT TO LOX CHILLDOWN INVERTER SHOULD BE 20 ± 5 ADC
(0.500 ± 0.125 VDC ON PCM SCALE) SCALE READING

*** CAUTION ***
LOX CHILLDOWN INVERTER HAS DRAWN OUT OF TOLERANCE CURRENT.

6.100 Enter $PA040.700. The following will be displayed:

LOX INVERTER FREQUENCY SHOULD BE 400 ± 4 cps.
(2.5 ± 1.0 VDC ON PCM SCALE) SCALE READING IS

LOX INVERTER PHASE A-B VOLTAGE SHOULD BE 55 ± 5 V
(4.231 ± 0.385 VDC ON PCM SCALE) SCALE READING IS
LOX INV PHASE A-C VOLTAGE SHOULD BE 55 ± 5 V
(4.231 ± 0.385 VDC ON PCM SCALE) SCALE READING IS

LOX INV PHASE A1-B1 VOLTAGE SHOULD BE 55 ± 5 V
(4.231 ± 0.385 VDC ON PCM SCALE) SCALE READING IS

LOX INV PHASE A1-C1 VOLTAGE SHOULD BE 55 ± 5 V
(4.231 ± 0.385 VDC ON PCM SCALE) SCALE READING IS

6.101 Replace pin j in BOB #1. Remove pin n from BOB #1. Enter $PA038600. The following will be displayed:

LOX CHILLDOWN INVERTER POWER ON INDICATOR
*** ON *** SHOULD BE OFF.

LOX CHILLDOWN PILOT RELAY RESET INDICATOR
*** OFF *** SHOULD BE ON

6.102 Replace pin n in BOB #1. Remove pin GG from BOB #1. Manually turn OFF Lox Chilldown Inverter. Enter $PA04600. The following will be displayed:

LH CHILLDOWN INVERTER POWER ON INDICATOR
*** OFF *** SHOULD BE ON

LH CHILLDOWN INVERTER PILOT RELAY RESET INDICATOR
*** ON *** SHOULD BE OFF

CURRENT TO LH CHILLDOWN INVERTER SHOULD BE
20 ± 5 ADC (0.500 ± 0.125 VDC ON PCM SCALE)
SCALE READING IS

*** CAUTION ***
LH CHILLDOWN INVERTER HAS DRAWN OUT OF TOLERANCE
CURRENT.

6.103 Enter $PA048400. The following will be displayed:

REVISIONS			
SYM	DESCRIPTION	DATE	APPROVAL

LH INVERTER FREQUENCY SHOULD BE 400 ± 4 CPS
(2.5 ± 1.0 VDC ON PCM SCALE) SCALE READING IS

LH INVERTER PHASE A-B VOLTAGE SHOULD BE 55 ± 5 V
(4.231 ± 0.385 VDC ON PCM SCALE) SCALE READING IS

LH INVERTER PHASE A-C VOLTAGE SHOULD BE 55 ± 5 V
(4.231 ± 0.385 VDC ON PCM SCALE) SCALE READING IS

LH INVERTER PHASE A1-B1 VOLTAGE SHOULD BE 55 ± 5V
(4.231 ± 0.385 VDC ON PCM SCALE) SCALE READING IS

LH INVERTER PHASE A1-C1 VOLTAGE SHOULD BE 55 ± 5 V
(4.231 ± 0.385 VDC ON PCM SCALE) SCALE READING IS

6.104 Replace pin GG in BOB #1. Remove pin F from BOB #1. Enter $PA046210. The following will be displayed:

LH CHILLDOWN INVERTER POWER ON INDICATOR
*** ON *** SHOULD BE OFF

LH CHILLDOWN INVERTER PILOT RELAY RESET INDICATOR
*** OFF *** SHOULD BE ON

6.105 Replace pin F in BOB #1. Manually turn OFF LH Chilldown Inverter. Verify that Destruct System Enable is OFF. On the S-IVB Propellant Dispersion Panel verify that System Status (S-11) is SAFE. Enter $PA053000 then $PA. The following will be displayed:

DESTRUCT SYS ENABLED INDICATION
*** OFF *** SHOULD BE ON

SYSTEM STATUS INDICATOR *** ON *** SHOULD BE OFF

PREREQUISITE CONDITIONS FOR R.S. TRANSFER TO EXT.
TEST HAVE NOT BEEN MET.

6.106 Enter $PA. The following will be displayed:

RSCR 1 POWER ON INDICATOR *** OFF *** SHOULD BE ON

RSCR 2 POWER ON INDICATOR *** OFF *** SHOULD BE ON

6.107 Enter $PA. The following will be displayed:

EBW 1 POWER ON INDICATOR *** OFF *** SHOULD BE ON

EBW 2 POWER ON INDICATOR *** OFF *** SHOULD BE ON

6.108 Verify that Destruct System Enable is ON. On the S-IVB Propellant Dispersion Panel verify the following:

6.108.1 STATUS SYSTEM (S-11) - OFF
6.108.2 RSCR NO.1 GND. PWR. (S-2) - ON

REVISIONS			
SYM	DESCRIPTION	DATE	APPROVAL

6.108.3 RSCR NO.2 GND. PWR. (S-7) - ON

Enter $PA054100. The following will be displayed:

RSCR 1 POWER ON INDICATOR *** ON *** SHOULD BE OFF

RSCR 2 POWER ON INDICATOR *** ON *** SHOULD BE OFF

6.109 On the S-IVB Propellant Dispersion Panel verify the following:

6.109.1 RSCR NO.1 GND. POWER (S-2) - OFF
6.109.2 RSCR NO.2 GND. POWER (S-7) - OFF
6.109.3 RSCR NO.1 PWR. TRANSFER (S-1) - INTERNAL (Momentarily)
6.109.4 RSCR NO.2 PWR. TRANSFER (S-6) - INTERNAL (Momentarily)

Remove fuses B202-1129A13A2J1/x and B202-1129A13A2J1/v.

Enter $PA054100. The following will be displayed:

RSCR 1 INT POWER ON IND. *** ON *** SHOULD BE OFF

RSCR 2 INT POWER ON IND. *** ON *** SHOULD BE OFF

6.110 Replace fuses B202-1129A13A2J/v and B202-1129A13A2J/x.
On the S-IVB Propellant Dispersion Panel verify the following:

6.110.1 RSCR NO.1 GND. PWR. (S-2) -AUTO
6.110.2 RSCR NO.2 GND. PWR. (S-7) - AUTO
6.110.3 EBW NO.1 GND. PWR. (S-10) - ON
6.110.4 EBW NO.2 GND. PWR. (S-14) - ON
6.110.5 RSCR NO.1 PWR. TRANSFER (S-1) - EXTERNAL (Momentarily)
6.110.6 RSCR NO.2 PWR. TRANSFER (S-6) - EXTERNAL (Momentarily)

Enter $PA. The following will be displayed:

EBW 1 POWER ON INDICATOR *** ON *** SHOULD BE OFF

EBW 2 POWER ON INDICATOR *** ON *** SHOULD BE OFF

6.111 On the S-IVB Propellant Dispersion Panel verify the following:

6.111.1 EBW NO.1 POWER TRANSFER (S-9) - OFF
6.111.2 EBW NO.2 POWER TRANSFER (S-13) - OFF
6.111.3 EBW NO.1 GROUND POWER (S-10) - AUTO
6.111.4 EBW NO.2 GROUND POWER (S-14) -AUTO
6.111.5 PROPELLANT DISPERSION RSCR (S-4) -ENABLE
Have R.F. Ground Station send S-IVB Arm and Engine Cutoff. Enter $PA057400. The following will be displayed:

EBW NO.1 INT POWER ON INDICATOR *** ON *** SHOULD BE OFF

EBW NO.2 INT POWER ON INDICATOR *** ON *** SHOULD BE OFF

REVISIONS			
SYM	DESCRIPTION	DATE	APPROVAL

6.112 On the S-IVB Propellant Dispersion Panel verify the following:

6.112.1 EBW NO.1 POWER TRANSFER (S-9) - AUTO
6.112.2 EBW NO.2 POWER TRANSFER (S-13) - AUTO
6.112.3 PROPELLANT DISPERSION (S-4) - OFF

Have R.F. Ground Station send P.D. Safe. Verify that Battery Simulator Power is OFF. Enter $PA. The following will be displayed:

4D10 VOLTAGE SHOULD BE 28 ± 2 VDC
(3.50 ± 0.25 ON PCM SCALE) SCALE READING IS

4D20 VOLTAGE SHOULD BE 28 ± 2 VDC
(3.50 ± 0.25 ON PCM SCALE) SCALE READING IS

4D30 VOLTAGE SHOULD BE 28 ± 2 VDC
(3.50 ± 0.25 ON PCM SCALE) SCALE READING IS

4D40 VOLTAGE SHOULD BE 56 ± 4 VDC
(3.50 ± 0.25 ON PCM SCALE) SCALE READING IS

REVIEW PRINTOUT TO DETERMINE WHICH BATTERY VOLTAGES ARE OF TOLERANCE.

6.113 On the S-IVB Meas. and R.F. Panel verify that C/O meas. Group (S-28) is ON. Enter $PA. The following will be displayed:

CHECKOUT MEAS. GROUP IND. FAILED TO GO OFF

6.114 On the S-IVB Meas. & R.F. Panel place C/O Meas. Group (S-28) OFF then AUTO. Enter $PA067700. The following will be displayed:

FWD. PWR HAS FAILED TO GO INT

AFT BUS 1 PWR DID NOT GO INT

AFT BUS 2 PWR DID NOT GO INT

STAGE POWER DID NOT GO INT

4D11 VOLTAGE SHOULD BE 28 ± 2 VDC
(2.0 ± 0.5 VDC ON PCM SCALE) SCALE READING IS

4D21 VOLTAGE SHOULD BE 28 ± 2 VDC
(2.0 ± 0.5 VDC ON PCM SCALE) SCALE READING IS

4D31 VOLTAGE SHOULD BE 28 ± 2 VDC
(2.0 ± 0.5 VDC ON PCM SCALE) SCALE READING IS

4D41 VOLTAGE SHOULD BE 56 ± 4 VDC
(3.0 ± 0.571 VDC ON PCM SCALE) SCALE READING IS

One or more faulty E/I switch is indicated.

REVISIONS			
SYM	DESCRIPTION	DATE	APPROVAL

6.115 On the S-IVB Networks Panel, place Power Transfer Test (S-20) to EXTERNAL position. Enter $PA069700. The following will be displayed:

PWR XFER TO INT COM FAILED

6.116 Enter $PA. The following will be displayed:

4D111 SUPV FAILED TO GO OFF

4D211 SUPV FAILED TO GO OFF

4D311 SUPV FAILED TO GO OFF

4D411 SUPV FAILED TO GO OFF

STAGE ON EXTERNAL POWER FAILED TO GO OFF

POWER TRANSFER COMPLETE FAILED TO INDICATE ON.

6.117 On the S-IVB Networks Panel place 4D411 (S-17) to AUTO. Enter $PA071800. The following will be displayed:

VOLTAGE MALFUNCTION FAILED TO OF OFF

6.118 On the S-IVB Networks Panel place both 4D411 (S-17) ON and Power Transfer Test (S-20) INTERNAL. Enter $PA074550. The following will be displayed:

FWD PWR ON INTERNAL IND FAILED TO GO OFF

AFT BUS 1 ON INT IND FAILED TO GO OFF

AFT BUS 2 ON INT IND FAILED TO GO OFF

STAGE ON INT POWER IND FAILED TO GO OFF

POWER TRANSFER FAILED TO GO OFFF

STAGE ON EXT PWR IND FAILED TO INDICATE ON

4D111 SUPERVISION FAILED TO INDICATE ON

4D211 SUPERVISION FAILED TO INDICATE ON

4D311 SUPERVISIOM FAILED TO INDICATE ON

4D411 SUPERVISION FAILED TO INDICATE ON

6.119 On the S-IVB Meas. and R.F. Panel place C/O Meas. Group Pwr. (S-28) OFF. Enter $PA. The following will be displayed:

POWER XFER COMPLETE IND FAILED TO GO OFF

REVISIONS			
SYM	DESCRIPTION	DATE	APPROVAL

CHECKOUT MEAS GP ON IND ***OFF*** SHOULD BE ON

On the S-IVB Networks Panel, place Power Transfer Test (S-20) to AUTO.

6.120 Enter $PA700400. The following will be displayed:

CHECKOUT MEAS CP ON IND *** OFF *** SHOULD BE ON

6.121 On the S-IVB Propellant Dispersion Panel verify the following:

6.121.1 STATUS SYSTEM (S-11) - OFF
6.121.2 RSCR NO.1 GROUND POWER (S-2) - ON
6.121.3 RSCR NO.2 GROUND POWER (S-7) - ON

Verify that Destruct System is Enabled. Enter $PA780000. The following will be displayed:

RSCR 1 PWR ON IND *** ON *** SHOULD BE OFF

RSCR 2 PWR ON IND *** ON *** SHOULD BE OFF

B3 TO B2 BACKUP COMPLETE

6.122 On the S-IVB Propellant Dispersion Panel verify the following:

6.122.1 RSCR NO.1 GROUND POWER (S-2) - AUTO
6.122.2 RSCR NO.2 GROUND POWER (S-7) - AUTO
6.122.3 EBW NO.1 GROUND POWER (S-10) - ON
6.122.4 EBW NO.2 GROUND POWER (S-14) - ON

Enter $PA780000. The following will be displayed:

B3 TO B2 BACKUP EXECUTING

EBW 2 PWR ON IND. *** ON *** SHOULD BE OFF

EBW 1 PWR ON IND. *** ON *** SHOULD BE OFF

6.123 On the S-IVB Propellant Dispersion Panel verify the following:

6.123.1 EBW NO.1 GROUND POWER (S-10) - AUTO
6.123.2 EBW NO.2 GROUND POWER (S-14) - AUTO
6.123.3 STATUS SYSTEM (S-11) - SAFE

Verify that Destruct System is OFF. Enter $PA999999.

6.124 Upon completion of this procedure, power down S-IVB stage and remove BOB #1 and BOB #2.

MSFC FORM 422 (VERTICAL) (AUGUST 1960)

NOTICE — When Government drawings, specifications, or other data are used for any purpose other than in connection with a definitely related Government procurement operation, the United States Government thereby incurs no responsibility nor obligation whatsoever; and the fact that the Government may have formulated, furnished, or in any way supplied the said drawings specifications or other data is not to be regarded by implication or otherwise as in any manner licensing the holder or any other person or corporation, or conveying any rights or permission to manufacture, use, or sell any patented invention that may in any way be related thereto.

APPLICATION		PART No.	M F	REVISIONS			
NEXT ASSY	USED ON			SYM	DESCRIPTION	DATE	APPROVAL

AS-503

VERIFICATION PROCEDURE

LAUNCH VEHICLE SIMULATED FLIGHT PREPARATIONS (VAVS)

73V1619

UNLESS OTHERWISE SPECIFIED DIMENSIONS ARE IN INCHES TOLERANCES ON: FRACTIONS DECIMALS ANGLES	ORIGINAL DATE OF DRAWING 7/22/68 DRAFTSMAN / CHECKER TRACER / CHECKER ENGINEER / ENGINEER	LAUNCH VEHICLE SIMULATED FLIGHT PREPARATIONS (VAVS) AS-503	GEORGE C. MARSHALL SPACE FLIGHT CENTER NATIONAL AERONAUTICS AND SPACE ADMINISTRATION HUNTSVILLE, ALABAMA
MATERIAL	SUBMITTED G. N. COKER		
HEAT TREATMENT	APPROVED H. B. HARRISON	SCALE	DWG SIZE A — 73V1619
FINAL PROTECTIVE FINISH		UNIT WT	SHEET 1 OF 4

REVISIONS			
SYM	DESCRIPTION	DATE	APPROVAL

1.0 SCOPE

THIS PROGRAM WILL BE EXECUTED PRIOR TO SIMULATED FLIGHT TESTS SETTING UP THE LIQUID LEVEL WET SENSORS AND THRUST OK LOGIC FOR ALL STAGES. THE PROGRAM WILL BE EXECUTED FOLLOWING SIMULATED FLIGHT TESTS TO RESET LIQUID LEVEL WET SENSORS AND THRUST OK LOGIC FOR ALL STAGES.

2.0 APPLICABLE GOVERNMENT FURNISHED DOCUMENTS

AESS S-IC ESE SCHEMATICS 40M10616

AESS S-II ESE SCHEMATICS 40M10590

AESS S-IVB ESE SCHEMATICS 40M13870

IBM SYSTEMS PROGRAMMING CONTRACT
NAS8-1400, KSC SUPPLEMENT NO. 1
"L/V SIMULATED FLIGHT PREPARATIONS"

3.0 GENERAL NOTES

NONE

4.0 PREREQUISITES

4.1 ALL STAGES WILL BE POWERED UP TO "READY FOR POWER TRANSFER".

4.2 IF PROGRAM OPTIONS PR1 OR PR3 ARE SELECTED TO CONTROL THE S-IC STAGE THRUST OK DISCRETES BY OAT EQUIPMENT, ON THE S-IC OAT PANEL VERIFY THAT POWER SWITCH S36 IS PLACED TO THE "ON" POSITION.

5.0 PROCEDURE

5.1 CALL UP THE PROGRAM BY ENTERING $TPRQVAVS FROM THE DISPLAY CONSOLE.

5.2 ENTER $PA AT THE DISPLAY CONSOLE AND DEPRESS THE "EXECUTE" PUSHBUTTON TO BEGIN THE PROGRAM.

5.3 AT STEP 12 OF THE PROGRAM, THE OPERATOR IS GIVEN THE FOLLOWING SIX OPTIONS FROM WHICH TO CHOOSE BEFORE PROCEEDING:

```
**********************************
TO SET UP SIM WET SENSORS
ONLY  ENTER $PR1
TO SET UP INCL ALL S-IC TOKS
      ENTER $PR2
TO SET UP INCL S-IC ENG 1-4 TOKS
      ENTER $PR3
TO RESET INCL S-IC TOK MDOS
      ENTER $PR4
TO RESET INCL S-IC TOKS
      ENTER $PR5
TO TERMINATE
      ENTER $PR6
```

REVISIONS			
SYM	DESCRIPTION	DATE	APPROVAL

5.4 SELECT THE DESIRED OPTION AND CONTINUE THE PROGRAM AS FOLLOWS:

A. TO TURN ON S-IC STAGE THRUST OK MODs VIA OAT PANEL:

1. ENTER $PR1 FROM DISPLAY CONSOLE.

2. VERIFY THAT THE S-IC OAT PANEL THRUST OK SWITCHES ARE CONFIGURED FOR AUTOMATIC THRUST OK INDICATIONS AFTER ENGINE START.

3. VERIFY THAT ALL PROPELLANT LEVEL SENSORS DRY INDICATIONS ARE OFF ON ALL STAGE CONSOLES.

4. VERIFY THAT THE PROGRAM HAS COMPLETED EXECUTION AND IS READY TO BE TERMINATED.

5. TERMINATE THE PROGRAM BY ENTERING $PR6.

B. TO TURN ON ALL S-IC STAGE THRUST OK MDOs VIA PROGRAM:

1. VERIFY THAT THE S-IC OAT PANEL THRUST OK SWITCHES ARE OFF.

2. ENTER $PR2 FROM DISPLAY CONSOLE.

3. VERIFY THAT ALL PROPELLANT LEVEL SENSORS DRY INDICATIONS ARE OFF FOR ALL STAGES.

4. VERIFY THAT THE PROGRAM HAS COMPLETED EXECUTION AND IS READY TO BE TERMINATED.

5. TERMINATE THE PROGRAM BY ENTERING $PR6.

C. TO TURN S-IC STAGE THRUST OK MDOs VIA PROGRAM FOR ENGINES 101 THROUGH 104.

1. VERIFY THAT THE S-IC OAT PANEL THRUST OK SWITCHES FOR ENGINES 101 THROUGH 104 ARE "OFF" AND FOR ENGINE 105 ARE CONFIGURED FOR AUTOMATIC THRUST OK INDICATION AFTER ENGINE START.

2. ENTER $PR3 FROM DISPLAY CONSOLE.

3. VERIFY THAT ALL PROPELLANT LEVEL SENSORS DRY INDICATIONS ARE "OFF" FOR ALL STAGES.

4. VERIFY THAT THE PROGRAM HAS COMPLETED EXECUTION AND IS READY TO BE TERMINATED.

5. TERMINATE THE PROGRAM BY ENTERING $PR6 FROM DISPLAY CONSOLE.

REVISIONS			
SYM	DESCRIPTION	DATE	APPROVAL

5.4 Continued

D. TO RESET ALL MDOs INCLUDING S-IC STAGE THRUST OK MDOs (THIS OPTION CANNOT ISSUE THRUST OK MDOs "OFF" IF THEY ARE BEING HELD "ON" BY OAT PANEL SWITCHES):

1. ENTER $PR4 FROM DISPLAY CONSOLE.

2. VERIFY THAT ALL PROPELLANT LEVEL SENSORS DRY INDICATIONS ARE "ON", ON ALL STAGE CONSOLES.

3. VERIFY THAT ALL THRUST OK INDICATIONS ARE "OFF" FOR S-IC STAGE.

4. WHEN THE PROGRAM HAS COMPLETED EXECUTION, TERMINATE BY ENTERING $PR6 AT THE DISPLAY CONSOLE.

E. TO RESET ALL MDOs OF THE PROGRAM EXCEPT THE S-IC STAGE THRUST OK MDOs.

1. ENTER $PR5 FROM DISPLAY CONSOLE.

2. VERIFY THAT ALL PROPELLANT LEVEL SENSORS DRY INDICATIONS ARE "ON" FOR ALL STAGES.

3. VERIFY THAT S-IC STAGE THRUST OK INDICATIONS ARE NOT AFFECTED BY THE PROGRAM.

4. TURN "OFF" ALL S-IC STAGE THRUST OK MDOs WITH OAT PANEL SWITCHES IF REQUIRED.

5. TERMINATE THE PROGRAM BY ENTERING $PR6 AT DISPLAY CONSOLE.

F. PROGRAM TERMINATION.

1. ENTER $PR6 AT DISPLAY CONSOLE.

REVISIONS			
SYM	DESCRIPTION	DATE	APPROVAL

This ATOLL Program (VAED) has been deleted until information is made available indicating what new ATOLL Program will be used as a replacement.

NOTICE — When Government drawings, specifications, or other data are used for any purpose other than in connection with a definitely related Government procurement operation, the United States Government thereby incurs no responsibility nor obligation whatsoever; and the fact that the Government may have formulated, furnished, or in any way supplied the said drawings specifications or other data is not to be regarded by implication or otherwise as in any manner licensing the holder or any other person or corporation, or conveying any rights or permission to manufacture, use, or sell any patented invention that may in any way be related thereto.

APPLICATION		PART No.	MF	REVISIONS			
NEXT ASSY	USED ON			SYM	DESCRIPTION	DATE	APPROVAL

SA-503

VERIFICATION PROCEDURE

S-IVB RANGE SAFETY FUNCTIONAL TEST PROGRAM (XARS)

73V1621

UNLESS OTHERWISE SPECIFIED DIMENSIONS ARE IN INCHES TOLERANCES ON: FRACTIONS DECIMALS ANGLES	ORIGINAL DATE OF DRAWING 6/25/68 DRAFTSMAN / CHECKER TRACER / CHECKER ENGINEER / ENGINEER SUBMITTED R. WILHITE 7/17/68 APPROVED R. DRAKEY 7/19/68	S-IVB RANGE SAFETY FUNCTIONAL TEST PROGRAM (XARS) SA-503	GEORGE C. MARSHALL SPACE FLIGHT CENTER NATIONAL AERONAUTICS AND SPACE ADMINISTRATION HUNTSVILLE, ALABAMA
MATERIAL		SCALE	DWG SIZE A — 73V1621
HEAT TREATMENT		UNIT WT	SHEET 1 OF 9
FINAL PROTECTIVE FINISH			

REVISIONS			
SYM	DESCRIPTION	DATE	APPROVAL

S-IVB RANGE SAFETY FUNCTIONAL TEST PROGRAM (XARS)

1.0 SCOPE

THIS PROCEDURE WILL VERIFY RANGE SAFETY FUNCTIONALY TEST PROGRAM (XARS).

2.0 APPLICABLE GOVERNMENT FURNISHED DOCUMENTS

S-IVB ESE AESS 40M13870
S-IVB MSE AESS 40M13992
S-IVB IP&C - 503
OPERATOR REFERENCE MANUAL FOR THE OPERATING SYSTEM FOR 68-F11-003
THE SATURN V LAUNCH COMPUTER COMPLEX
VEHICLE AS-503

3.0 GENERAL NOTES

XARS WILL BE ENTERED FROM THE KEYBOARD IN ACCORDANCE WITH THE IBM OPERATOR REFERENCE MANUAL.

4.0 PREREQUISITES

4.1 POWER UP HAS BEEN ACCOMPLISHED PER 80X0401 PROCEDURE.
4.2 REQUEST THE RANGE SAFETY ENGINEER TO ACTIVATE THE RANGE SAFETY GROUND STATION AS FOLLOWS:

4.2.1 SIGNAL GENERATOR: FREQUENCY - 450 MHZ
DEVIATION - +1 -60KHZ
ATTENUATION - 70 DBM
(TO THE RECEIVERS)

4.2.2 CODER: CLOCK MODE - NORM
NOTE: UPON INSTRUCTION FROM C4KB EACH COMMAND WILL BE TRANSMITTED IN THE RECEIVER MODE FOR APPROXIMATELY 2 SECONDS.

4.3 VERIFY SAFETY BUS "ON" AND OAT POWER "ON".

REVISIONS			
SYM	DESCRIPTION	DATE	APPROVAL

4.0 (Continued)

4.4 TRANSFER THE SYSTEM SAFE SWITCH TO "SAFE" THEN "OFF".

4.5 VERIFY THAT THE FOLLOWING SWITCHES ARE IN THE "AUTO" POSITION:

4.5.1 RSCR #1 GROUND POWER POWER TRANSFER
4.5.2 RSCR #2 GROUND POWER POWER TRANSFER
4.5.3 EBW #1 GROUND POWER POWER TRANSFER
4.5.4 EBW #2 GROUND POWER POWER TRANSFER
4.5.5 PULSE SENSOR POWER
4.5.6 PULSE SENSOR TEST
4.5.7 PULSE SENSOR RESET
4.5.8 LIFTOFF SIMULATE
4.5.9 SAFE AND ARM
4.5.10 ENGINE CONTROL POWER
4.5.11 ENGINE CUTOFF
4.5.12 ENGINE READY BY-PASS
4.5.13 COMPONENT TEST LOCKOUT

4.6 VERIFY I.U. IS POWERED-UP AND THE SWITCH SELECTOR IS OPERATIVE.

4.7 INSTALL A SHORTING PLUG IN THE SPECIAL COMPONENTS PANEL B202-423A2 AT POSITION E2 TO GIVE "SIMULATE LIFTOFF" (RANGE SAFETY).

5.0 PROCEDURE

5.1 CALL UP THE PROGRAM ATGT.

5.2 TAKE AN $P1 OPTION.

5.3 CALL UP THE PROGRAM XARS AND PROCEED PER THE PROGRAM INSTRUCTION.

6.0 ERROR MESSAGES

6.1 "MEAS NO M16 OCT OF TOL"
-FWD BATT NO. 1 OUTPUT VOLT. M16.

6.2 "MEAS NO M18 OUT OF TOL"
-FWD BATT NO. 2 OUTPUT VOLT. M18.

6.3 "MEAS NO M6 OUT OF TOL"
-ENG CNTRL BUSS VOLT, M6.

REVISIONS			
SYM	DESCRIPTION	DATE	APPROVAL

6.0 (Continued)

6.4 "MEAS NO M30 DOES NOT INDICATE PROPER CHARGING OF EBW 1"
-F/U 1 EBW RANGE SAFETY VOLT, M30.

6.5 "MEAS NO M31 DOES NOT INDICATE PROPER CHARGING OF EBW 2"
-F/U 2 EBW RANGE SAFETY VOLT, M31.

6.6 "MEAS NO K98 OUT OF TOL"
-EVENT R/S 1 ARM CUTOFF DEST IND, K98.

6.7 "MEAS NO N57 OUT OF TOL"
-MISC-SEC R/S REVR 1 L/L SIG STR, N57.

6.8 "MEAS NO K99 OUT OF TOL"
-EVENT R/S 2 ARM CUTOFF DEST IND, K99.

6.9 "MEAS NO N62 OUT OF TOL"
-MISC-SEC R/S DECODER 2 L/L SIG STR, N62.

TM CHANNELS

DP1B0-04-05-00	VOLT - F/U 1 EBW RANGE SAFETY
DP1B0-04-06-00	VOLT - F/U 2 EBW RANGE SAFETY
CP1B0-03-09-00	MISC - SECURE R/S RCVR 1 LOW LVL SIG STGTH
CP1B0-03-10-00	MISC - SECURE R/S RCVR 2 LOW LVL SIG STGTH
CP1B0-23-06-00	VOLT - PU VALVE POSITION FEEDBACK
CP1B0-09R04-07	EVENT - R/S 1 PULSE SENSOR
CP1B0-09R04-08	EVENT - R/S 2 PULSE SENSOR
CP1B0-09R03-01	EVENT - CUTOFF SIGNAL
CP1B0-09R03-02	EVENT - ENGINE RELAY
CP1B0-09R09-06	EVENT - ENGINE CUTOFF COMMAND - ON

REVISIONS			
SYM	DESCRIPTION	DATE	APPROVAL

TABLE II

S-IVB SWITCH SELECTOR CHANNEL FUNCTIONS

CHANNEL	NOMENCLATURE	POSITION
3	LOX REPRESSURIZATION CONTROL VALVE OPEN COMMAND	ON
4	LOX REPRESSURIZATION CONTROL VALVE OPEN COMMAND	OFF
5	P.U. ACTIVATE	ON
6	P.U. ACTIVATE	OFF
7	P.U. INVERTER & DC OVEN POWER COMMAND	ON
8	P.U. INVERTER & DC OVER POWER COMMAND	OFF
9	ENGINE START	ON
10	ENGINE READY BYPASS COMMAND	ON
11	FUEL INJ. TEMPERATURE BYPASS COMMAND	ON
12	ENGINE CUT-OFF	ON
13	ENGINE CUT-OFF	OFF
14	LOX CHILLDOWN PUMP PURGE OUTLET LINE DUMP	ON
15	VALVE OPEN COMMAND	OFF
16	FUEL INJ. TEMPERATURE BYPASS COMMAND	OFF
17	P.U. VALVE HARDOVER POSITION	ON
18	P.U. VALVE HARDOVER POSITION	OFF
19	SPARE	OFF
20	LOX CHILLDOWN PUMP PURGE CONTROL VALVE ENABLE	ON
21	COMMAND	OFF
22	LOX CHILLDOWN PUMP	ON

REVISIONS			
SYM	DESCRIPTION	DATE	APPROVAL

CHANNEL	NOMENCLATURE	POSITION
23	LOX CHILLDOWN PUMP	OFF
24	ENGINE PUMP PURGE CONTROL VALVE ENABLE	ON
25	ENGINE PUMP PURGE CONTROL VALVE ENABLE COMMAND	OFF
26	O_2H_2BURNER LH_2 VALVE & LOX SHUTDOWN VALVE OPEN PILOT VALVE COMMAND	ON
27	ENGINE START	OFF
28	AUXILIARY HYDRAULIC PUMP FLIGHT MODE	ON
29	AUXILIARY HYDRAULIC PUMP FLIGHT MODE	OFF
30	AUXILIARY HYDRAULIC PUMP COAST MODE COMMAND	ON
31	AUXILIARY HYDRAULIC PUMP COAST MODE COMMAND	OFF
32	SECOND BURN COMMAND	ON
33	SECOND BURN COMMAND	OFF
34	PU FUEL BOIL OFF BIAS COMMAND	ON
35	PU FUEL BOIL OFF BIAS COMMAND	OFF
36	REPRESS SYSTEM MODE SELECTOR (AMBIENT)	ON
37	REPRESS SYSTEM MODE SELECTOR (CRYOGENIC)	OFF
38	LH_2 TANK VENT OPEN COMMAND	ON
39	LH_2 REPRESSURIZATION CONTROL VALVE	ON
40	PCM GROUP SYSTEM	ON
41	PCM GROUP SYSTEM	OFF
42	70 ULLAGE ENGINE #1	ON
43	70 ULLAGE ENGINE #1	OFF
44	LOX TANK NON-PROPULSIVE VENT OPEN LATCH	ON
45	LOX TANK NON-PROPULSIVE VENT OPEN LATCH	OFF
46	FM/FM SYSTEM GROUP	ON
47	FM/FM SYSTEM GROUP	OFF

REVISIONS			
SYM	DESCRIPTION	DATE	APPROVAL

CHANNEL	NOMENCLATURE	POSITION
50	HEAT EXCHANGER BY-PASS VALVE ENABLE	OFF
51	HEAT EXCHANGER BY-PASS VALVE ENABLE	ON
54	CHARGING ULLAGE IGNITION	ON
55	CHARGING ULLAGE JETTISON	ON
56	FIRE ULLAGE IGNITION	ON
57	FIRE ULLAGE JETTISON	ON
58	FUEL CHILLDOWN PUMP	ON
59	FUEL CHILLDOWN PUMP	OFF
60	O_2H_2 BURNER LH_2 VALVE & LOX SHUTDOWN VALVE	ON
61	CLOSE PILOT VALVE COMMAND	OFF
62	SPECIAL CALIBRATION RELAY GROUP	ON
63	SPECIAL CALIBRATION RELAY GROUP	OFF
64	PCM RF ASSY. POWER COMMAND	ON
65	PCM RF ASSY. POWER COMMAND	OFF
66	RF ASSY. POWER COMMAND	ON
67	RF ASSY POWER COMMAND	OFF
68	FIRST BURN COMMAND	ON
69	FIRST BURN COMMAND	OFF
70	BURNER EXCITER COMMAND	ON
71	BURNER EXCITER COMMAND	OFF
72	O_2H_2 BURNER LH_2 VALVE & LOX SHUTDOWN VALVE OPEN PILOT VALVE COMMAND	OFF
73	F. U. RESET	OFF
74	O_2H_2 BURNER LOX VALVE PILOT VALVE CLOSE	ON
75	O_2H_2 BURNER LOX VALVE PILOT VALVE CLOSE	OFF

REVISIONS			
SYM	DESCRIPTION	DATE	APPROVAL

CHANNEL	NOMENCLATURE	POSITION
76	LH_2 TANK VENT OPEN COMMAND	OFF
77	LH_2 TANK VENT BOOST CLOSE COMMAND	ON
78	LH_2 TANK VENT BOOST CLOSE COMMAND	OFF
79	COAST PERIOD COMMAND	ON
80	COAST PERIOD COMMAND	OFF
81	LH_2 REPRESSURIZATION CONTROL VALVE	OFF
82	PREVALVE CLOSE COMMAND	ON
83	PREVALVE CLOSE COMMAND	OFF
84	FUEL TANK CONTINUOUS VENT	ON
85	VOTING CIRCUIT ENABLE	ON
86	VOTING CIRCUIT ENABLE	OFF
87	VALVE CLOSE COMMAND	OFF
88	CHARGING COMMAND RESET	OFF
89	O_2H_2 BURNER LOX VALVE PILOT VALVE OPEN	ON
90	O_2H_2 BURNER LOX VALVE PILOT VALVE OPEN	OFF
91	CHILLDOWN SHUT-OFF PILOT	ON
92	CHILLSOWN SHUT-OFF PILOT	OFF
93	LOX VENT OPEN COMMAND	ON
94	LOX VENT OPEN COMMAND	OFF
95	LOX VENT VALVE BOOST CLOSE COMMAND	ON
96	LOX VENT VALVE BOOST CLOSE COMMAND	OFF
97	POINT LEVEL SENSOR ARMING COMMAND	ON
98	POINT LEVEL SENSOR ARMING COMMAND	OFF
99	RATE GYRO COMMAND	ON

REVISIONS			
SYM	DESCRIPTION	DATE	APPROVAL

CHANNEL	NOMENCLATURE	POSITION
100	RATE GYRO COMMAND	OFF
101	70 LB. ULLAGE ENGINE #2	ON
102	70 LB. ULLAGE ENGINE #2	OFF
103	LOX TANK FLIGHT PRESSURIZATION SYSTEM ON COMMAND	ON
104	LOX TANK FLIGHT PRESSURIZATION SYSTEM ON COMMAND	OFF
105	LOX TANK NPV OPEN	ON
106	LOX TANK NPV OPEN	OFF
107	LH_2 TANK CONTINUOUS VENT RELIEF OVR. SHTF VLV OPEN	ON
108	LH_2 TANK CONTINUOUS VENT RELIEF OVR. SHTF VLV OPEN	OFF
109	SPARE	ON
110	SPARE	OFF
111	FUEL TANK CONTINUOUS VENT ORIFICE SHTF VALVE OPEN COMMAND	ON
112	FUEL TANK CONTINUOUS VENT ORIFICE SHTF VALVE OPEN COMMAND	OFF

NOTICE—When Government drawings, specifications, or other data are used for any purpose other than in connection with a definitely related Government procurement operation, the United States Government thereby incurs no responsibility nor obligation whatsoever; and the fact that the Government may have formulated, furnished, or in any way supplied the said drawings specifications or other data is not to be regarded by implication or otherwise as in any manner licensing the holder or any other person or corporation, or conveying any rights or permission to manufacture, use, or sell any patented invention that may in any way be related thereto.

APPLICATION		PART No.	M F	REVISIONS			
NEXT ASSY	USED ON			SYM	DESCRIPTION	DATE	APPROVAL

SA-503

VERIFICATION PROCEDURE

S-II SWITCH SELECTOR FUNCTIONAL TEST (QAS2)

73V1622

UNLESS OTHERWISE SPECIFIED DIMENSIONS ARE IN INCHES TOLERANCES ON: FRACTIONS DECIMALS ANGLES	ORIGINAL DATE OF DRAWING 7/22/68 DRAFTSMAN / CHECKER TRACER / CHECKER ENGINEER / ENGINEER	S-II SWITCH SELECTOR FUNCTIONAL TEST (QAS2) SA-503	GEORGE C. MARSHALL SPACE FLIGHT CENTER NATIONAL AERONAUTICS AND SPACE ADMINISTRATION HUNTSVILLE, ALABAMA
MATERIAL	SUBMITTED Julius B. Campbell J. B. CAMPBELL		
HEAT TREATMENT			
FINAL PROTECTIVE FINISH	APPROVED H. B. Harrison H. B. HARRISON	SCALE UNIT WT	DWG SIZE A 73V1622 SHEET 1 OF 6

REVISIONS			
SYM	DESCRIPTION	DATE	APPROVAL

1.0 SCOPE

THIS PROCEDURE WILL VERIFY THE ATOLL PROGRAM, "S-II SWITCH SELECTOR FUNCTIONAL", QAS2.

2.0 APPLICABLE GOVERNMENT FURNISHED DOCUMENTS

AESS S-II ESE SATURN V	40M10590
AESS S-II STAGE SIMULATOR	40M34242
OPERATOR REFERENCE MANUAL FOR SLCC PROGRAMMING SYSTEM, VEHICLE SA-503	IBM NO. 68-F11-0003
SPECIFICATIONS FOR THE TEST PROGRAMS FOR THE SATURN V LAUNCH COMPUTER COMPLEX, VOLUMES I AND II	MSFC NO. 1-4-441-9 IBM NO. 66-F11-0006

3.0 GENERAL NOTES

QAS2 WILL BE ENTERED FROM KEYBOARD IN ACCORDANCE WITH THE OPERATOR REFERENCE MANUAL. ALL PROGRAM OPTIONS WILL BE EXERCISED AND HARDWARE RESPONSE WILL BE MONITORED.

4.0 PREREQUISITES

NONE

REVISIONS			
SYM	DESCRIPTION	DATE	APPROVAL

5.0 PROCEDURE

5.1 S-II SHALL BE POWERED UP.

5.2 IU SHALL BE POWERED UP AND SWITCH SELECTOR ON LINE.

5.3 AT SANDERS DISPLAY CONSOLE NO. 6 ENTER S-II SWITCH SELECTOR FUNCTIONAL (QAS2), BY ENTERING $TPRQ QAS2.

5.4 DURING QAS2 VERIFICATION, THE FOLLOWING MDO's AND DDAS DISCRETES WILL BE UTILIZED. MDI's CAN BE VERIFIED BY DEE-6 PRINTOUTS AND VISUAL INDICATIONS ON THE S-II PANELS.

SIGNAL	NOMENCLAUTRE
MDI	
1548	PU RESET
1076	RECIRCULATION STOP RESET
1036	TAPE RECORDER RESET
1196	ENGINE LOGIC RESET
1557	MEAS CONTROL SWITCH NO. 2 ACTIVATE
1627	PREVALVE LOCKOUT OFF
1008	SEPARATION SYSTEM RESET
1077	RECIRCULATION RESET
1062	ACCUMULATOR LOCK
1100	STEP PRESSURE RESET AND ACCUMULATOR UNLOCKED
1566	EDS 2 CUTOFF
1567	RSCR 2 CUTOFF
2522	STAGE LOGIC RESET

REVISIONS			
SYM	DESCRIPTION	DATE	APPROVAL

SIGNAL	NOMENCLATURE
MDI	
2310	S-II STAGE SELECT INDICATOR
816	REG. CONTROL BIT 1 VERIFY INDICATOR
817	REG. CONTROL BIT 2 VERIFY INDICATOR
818	REG. CONTROL BIT 3 VERIFY INDICATOR
819	REG. CONTROL BIT 4 VERIFY INDICATOR
820	REG. CONTROL BIT 5 VERIFY INDICATOR
821	REG. CONTROL BIT 6 VERIFY INDICATOR
822	REG. CONTROL BIT 7 VERIFY INDICATOR
823	REG. CONTROL BIT 8 VERIFY INDICATOR
1396	SWITCH SELECTOR ZERO

DDAS	NOMENCLATURE
EP1A2-26R03-09	SWITCH SELECTOR REGISTER TEST
DP1A0-19G00-02	BIT NO. 1 VERIFY (CHANNEL)
DP1A0-19G00-02	BIT NO. 2 VERIFY
DP1A0-19G00-03	BIT NO. 3 VERIFY
DP1A0-19G00-04	BIT NO. 4 VERIFY
DP1A0-19G00-05	BIT NO. 5 VERIFY
DP1A0-19G00-06	BIT NO. 6 VERIFY
DP1A0-19G00-07	BIT NO. 7 VERIFY
DP1A0-19G00-08	BIT NO. 8 VERIFY
ECP1A2-26R02-06	FIRING COMMAND RESET

REVISIONS			
SYM	DESCRIPTION	DATE	APPROVAL

CHANNEL	NOMENCLATURE
30	START 1st PAM FM/FM CAL
9	STOP 1st PM FM/FM CAL
25	START PHASE LIM. C/O ARM
6	START PHASE LIM. C/O RESET
11	S-II ORDNANCE ARM
24	ULLAGE TRIGGER
23	SECOND PLANE SEPARATION
8	S-II/S-IVB ORDNANCE ARM
5	S-II/S-IVB SEPARATION
33	ENGINE START
18	ENGINE CUTOFF
31	ALL ENGINE CUTOFF RESET
3	LOX DEPLETION SENSOR ECO ARM
42	LH2 DEPLETION SENSOR ECO ARM
99	PREVALVES CLOSE ARM COMMAND
38	FUEL TANK LOW PRES. MODE
71	START RECORDERS
104	STOP RECORDERS
90	MEASUREMENT CONTROL SWITCH #2 ACTIVATE
32	PU SYSTEM ACTIVATE
66	START RECORDER TIMES
48	CHILLDOWN STOP COMMAND
7	FUEL PRESS STEP COMMAND
14	LOX PRESS STEP COMMAND

REVISIONS			
SYM	DESCRIPTION	DATE	APPROVAL

CHANNEL	NOMENCLATURE
12	HYDRAULIC ACCUM UNLOCK
88	CHILLDOWN VALVES CLOSE
20	ENGINE READY BYPASS
49	ENGINE READY BYPASS RESET
19	PREVALVE LOCKOUT RESET

MDO	NOMENCLATURE
334	PREVALVE LOCKOUT OFF
1061	STAGE LOGIC RESET
548	ACCUM CONTROL LOCK
736	S-II STAGE SELECT
768	REG. CONTROL BIT 1 ADDRESS
769	REG. CONTROL BIT 2 ADDRESS
770	REG. CONTROL BIT 3 ADDRESS
771	REG. CONTROL BIT 4 ADDRESS
772	REG. CONTROL BIT 5 ADDRESS
773	REG. CONTROL BIT 6 ADDRESS
774	REG. CONTROL BIT 7 ADDRESS
775	REG. CONTROL BIT 8 ADDRESS
776	SWITCH SELECTOR RESET
777	SWITCH SELECTOR READ
1137	PREVALVE LOCKOUT
1135	LIFTOFF SIMULATE

NOTICE — When Government drawings, specifications, or other data are used for any purpose other than in connection with a definitely related Government procurement operation, the United States Government thereby incurs no responsibility nor obligation whatsoever; and the fact that the Government may have formulated, furnished, or in any way supplied the said drawings specifications or other data is not to be regarded by implication or otherwise as in any manner licensing the holder or any other person or corporation, or conveying any rights or permission to manufacture, use, or sell any patented invention that may in any way be related thereto.

APPLICATION		PART No.	M F	REVISIONS			
NEXT ASSY	USED ON			SYM	DESCRIPTION	DATE	APPROVAL

AS-503

VERIFICATION PROCEDURE

S-IVB POWER DISTRIBUTION DATA DISPLAY (NES4)

73V1623

UNLESS OTHERWISE SPECIFIED DIMENSIONS ARE IN INCHES TOLERANCES ON: FRACTIONS DECIMALS ANGLES	ORIGINAL DATE OF DRAWING 6/28/68		S-IVB POWER DISTRIBUTION DATA DISPLAY (NES4) AS-503	GEORGE C. MARSHALL SPACE FLIGHT CENTER NATIONAL AERONAUTICS AND SPACE ADMINISTRATION HUNTSVILLE, ALABAMA	
	DRAFTSMAN	CHECKER			
	TRACER	CHECKER			
MATERIAL	ENGINEER	ENGINEER			
HEAT TREATMENT	SUBMITTED R. WILHITE 7/8/68				
FINAL PROTECTIVE FINISH	APPROVED R. DRAKEY		SCALE UNIT WT	DWG SIZE A	73V1623 SHEET 1 OF 10

REVISIONS			
SYM	DESCRIPTION	DATE	APPROVAL

1.0 SCOPE

Thie procedure describes the instructions necessary to verify Test Program, S-IVB Power Distribution Data Display (NES4).

2.0 APPLICABLE GOVERNMENT FURNISHED DOCUMENTS

2.1 40M13870 Advanced Electrical System Schematics, S-IVB ESE Saturn V

2.2 Validation Procedure for S-IVB Power Distribution Data Display Program (NES4)

2.3 1B43567 Instrumentation Program and Components List Saturn S-IVB 503.

3.0 GENERAL NOTES

The test program will be called up and executed from Sanders Display Console No. 5 as described in this procedure. Each option will be exercised (if applicable).

4.0 PREREQUISITES

4.1 IU powered up (ground power).

4.2 S-IVB powered up.

4.3 S-IVB Telemetry powered up.

4.4 IU DDAS and Telemetry on line and supporting.

4.5 The slide required by the program must be mounted in position 11 of the slide projection equipment.

5.0 PROCEDURE

5.1 Depress TYPE, key in the following and depress EDIT EXECUTE.

$FUNCNES4/015

5.2 The slide, as shown in Figure 1, should be displayed. Disregard measurement values and switch positions displayed.

5.3 Adjust console and slide as necessary so that the data will be displayed in the proper boxes on the slide.

5.4 Depress TYPE, key in the following and depress EDIT EXECUTE.

$FUNTNES4

REVISIONS			
SYM	DESCRIPTION	DATE	APPROVAL

5.5 Depress CLEAR PAGE. The slide and data should no longer be displayed.

5.6 Depress TYPE, key in the following and depress EDIT EXECUTE.

$FUNCNES4/015

5.7 The slide shown in Figure 1 should again be displayed.

5.8 Operate the following switches and monitor the display for proper response (see Figure 2).

SWITCH	PANEL	MONITOR ON DISPLAY
16	S-IVB NETWORKS	SEQ. PWR.
44	S-IVB APS LAUNCH AND MONITOR	APS 1 & 2 PWR.
1	S-IVB ENG. TEST	ENG. CONT. PWR.
2	S-IVB ENG. TEST	ENG. IGN. PWR.
3	S-IVB HYDRAULIC	AUX. HYD. PUMP
5	S-IVB RECIRCULATION	LOX C/D INV.
6	S-IVB RECIRCULATION	LH C/D INV.
1	S-IVB PROPELLANT UTILIZATION	PU
11	S-IVB MEASURING & RF	C/O MEAS. GRP.
13	S-IVB NETWORKS	+4D119 (SEQ. PWR. & STAGE PWR. SHOULD BE "OFF" BEFORE +4D119 CAN BE TURNED "OFF".)

5.9 Verify +4D119, Stage Power, Seq. Power and +4D411 power is "ON" on the S-IVB Networks panel.

5.10 Verify that the S-IVB stage is on external power transfer vectors (E/I switch) should be as shown in Figure 2.

5.11 Verify that the S-IVB Battery Simulators are powered up.

5.12 Transfer the S-IVB stage to Internal power. The power transfer vectors should now be connected to the Battery source.

5.13 Transfer the S-IVB stage to External Power. The power transfer vectors should be connected to the External source.

REVISIONS			
SYM	DESCRIPTION	DATE	APPROVAL

5.14 Place the LCC IU and S-IVB stage DDAS and Ground DDAS to the SIMULATE MODE. Simulate the following values and monitor the display for proper response.

DDAS Address	Simulate Value (Octal)	Monitor	Desired Display Value
EP1A0-01-08	1747/0030	EXT +4D110A	500 AMPS/0 AMPS
EP1A0-07-08	"	EXT +4D110V	40 VOLTS/20 VOLTS
DP1B0-14-08	"	Battery +4D10A	200 AMPS/0 AMPS
DP1B0-14-06	"	Battery +4D10V	40 VOLTS/20 VOLTS
DP1B0-11-10	"	Unit 1 Temp. (Aft No. 1)	660°/460°
DP1B0-23-07	"	Unit 2 Temp. (Aft No. 1)	660°/460°
EP1A0-09-05	"	+4D11V	40 VOLTS/20 VOLTS
EP1B0-20-09	"	+4D400V	70/35 VOLTS
EP1A0-03-03	"	+4D400A	300/0 AMPS
DP1B0-14-09	"	+4D40A	200/0 AMPS
DP1B0-14-05	"	+4D40V	80/0 VOLTS
DP1B0-14-10	"	Unit 1 Temp. (Aft No. 2)	660°/460°
DP1B0-23-09	"	Unit 2 Temp. (Aft No. 2)	660°/460°
EP1B0-19-10	"	+4D41 Bus	70/35 AMPS
EP1A0-01-06	"	+4D310A	300/0 AMPS
EP1A0-16-09	"	+4D310V	40/20 VOLTS
DP1B0-01-06	"	+4D30A	200/0 AMPS
DP1B0-01-04	"	+4D30V	40/0 VOLTS
EP1A0-02-06	"	+4D31 Bus	40/20 VOLTS
DP1B0-05-10	"	Aft 5V Excit Mod V	5.5/4.5 VOLTS

REVISIONS			
SYM	DESCRIPTION	DATE	APPROVAL

5.1 (Continued)

DDAS Address	Simulate Value (Octal)	Monitor	Desired Display Value
CP1BO-14-10	1747/0030	Aft 5V Excit Mod Hz	2300/0 CPS
DP1BO-05-09	"	FWD 5V Excit Mod V	5.5/4.5 VOLTS
DP1BO-04-08	"	FWD 5V Excit Mod Hz	2300/0 CPS
DP1BO-02-05	"	Unit 1 Temp. (FWD No. 1)	660°/460°
DP1BO-23-08	"	Unit 2 Temp. (FWD No. 1)	660°/460°
EP1AO-04-09	"	+4D210A	150/0 AMPS
EP1AO-09-07	"	+4D210V	40/20 VOLTS
DP1BO-01-07	"	+4D20A	20/0 AMPS
DP1BO-01-05	"	+4D20V	40/0 VOLTS
EP1AO-08-04	"	+4D21 Bus	40/20 VOLTS
DP1BO-02-06	"	Temp. (FWD No. 2)	660°/460°

5.15 Simulate the indicated values for the following addresses. Monitor the measurement being simulated on the display for blinking. (See Figure 3.)

Measurement No.	Address	DDAS Value (Octal)	Blink
M146-340	EP1AO-07-08	0410	Yes
		0420	No
		1055	No
		1065	Yes
M169-340	EP1AO-01-08	0155	No
		0165	Yes
M021-404	DP1BO-14-08	0360	No
		0370	Yes
M014-404	DP1BO-14-06	1165	Yes
		1175	No
		1410	No
		1420	Yes
M171-340	EP1AO-16-09	0370	No
		0400	Yes
M148-340	EP1AO-16-09	0410	Yes
		0420	No
		1055	No
		1065	Yes

REVISIONS			
SYM	DESCRIPTION	DATE	APPROVAL

5.15 (Continued)

Measurement No.	Address	DDAS Value (Octal)	Blink
M019-41	DP1B0- 01-06	0550	No
		0560	Yes
M016-411	DP1B0- 01-04	1220	Yes
		1230	No
		1360	No
		1370	Yes
M154-340	EP1A0-02-06	0410	Yes
		0420	No
		1055	No
		1065	Yes
M166-340	EP1A0-03-03	0673	No
		0703	Yes
M145-340	EP1B0-20-09	1010	Yes
		1020	No
		1315	No
		1325	Yes
M022-404	DP1B0-14-09	1216	No
		1226	Yes
M015-404	DP1B0-14-05	1232	Yes
		1242	No
		1360	No
		1370	Yes
M017-340	EP1A0-04-09	0066	No
		0076	Yes
M147-340	EP1A0-09-07	0471	Yes
		0501	No
		0724	No
		1004	Yes
M020-411	DP1B0-01-07	0410	No
		0420	Yes
M018-411	DP1B0-01-05	1220	Yes
		1230	No
		1360	No
		1370	Yes
M153-340	EP1B0-19-10	1010	Yes
		1020	No
		1315	No
		1325	Yes
M152-340	EP1A0-08-04	0410	Yes
		0420	No
		1055	No
		1065	Yes
C104-404	DP1B0-11-10	0471	Yes
		0501	No
		1055	No
		1065	Yes
C102-411	DP1B0-02-05	0471	Yes
		0501	No
		1055	No
		1065	Yes

REVISIONS			
SYM	DESCRIPTION	DATE	APPROVAL

5.15 (Continued)

Measurement No.	Address	DDAS Value (Octal)	Blink
C211-411	DP1BO-23-08	0471	Yes
		0501	No
		1055	No
		1065	Yes
C105-404	DP1BO-14-10	0471	Yes
		0501	No
		1055	No
		1065	Yes
C103-411	DP1BO-02-06	0471	Yes
		0501	No
		1055	No
		1065	Yes
C131-404	DP1BO-23-07	0471	Yes
		0501	No
		1055	No
		1065	Yes
C212-404	DP1BO-23-09	0471	Yes
		0501	No
		1055	No
		1065	Yes

5.16 Depress TYPE, key in the following and depress EDIT EXECUTE.

$FUNTNES4

5.17 Depress CLEAR PAGE.

5.18 Verify operating system message indicating the function executor has terminated.

5.19 Return all DDAS to the receive mode.

REVISIONS			
SYM	DESCRIPTION	DATE	APPROVAL

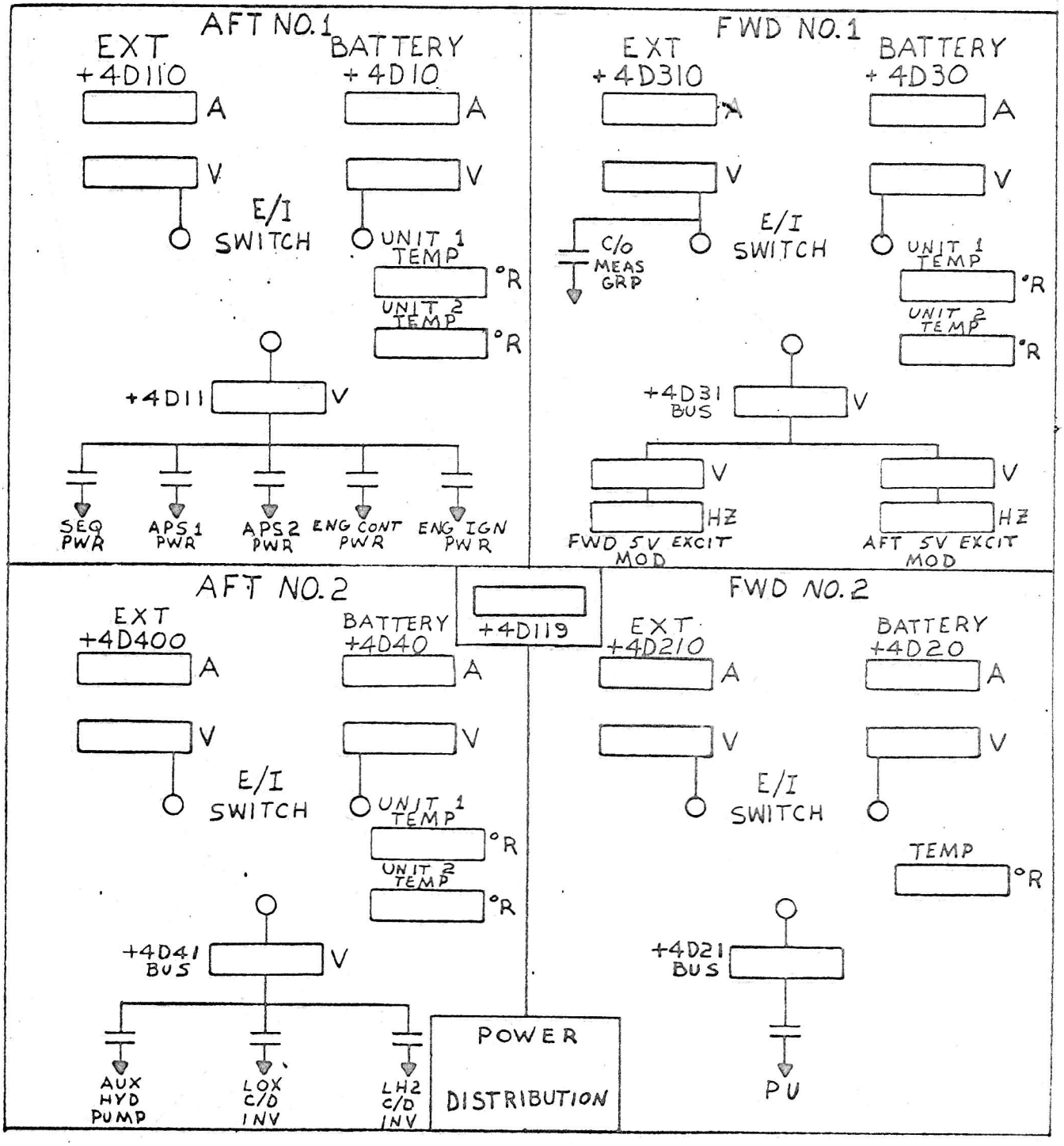

FIGURE 1

CODE IDENT NO	DWG SIZE	73V1623
	A	SHEET 8 of 10

REVISIONS			
SYM	DESCRIPTION	DATE	APPROVAL

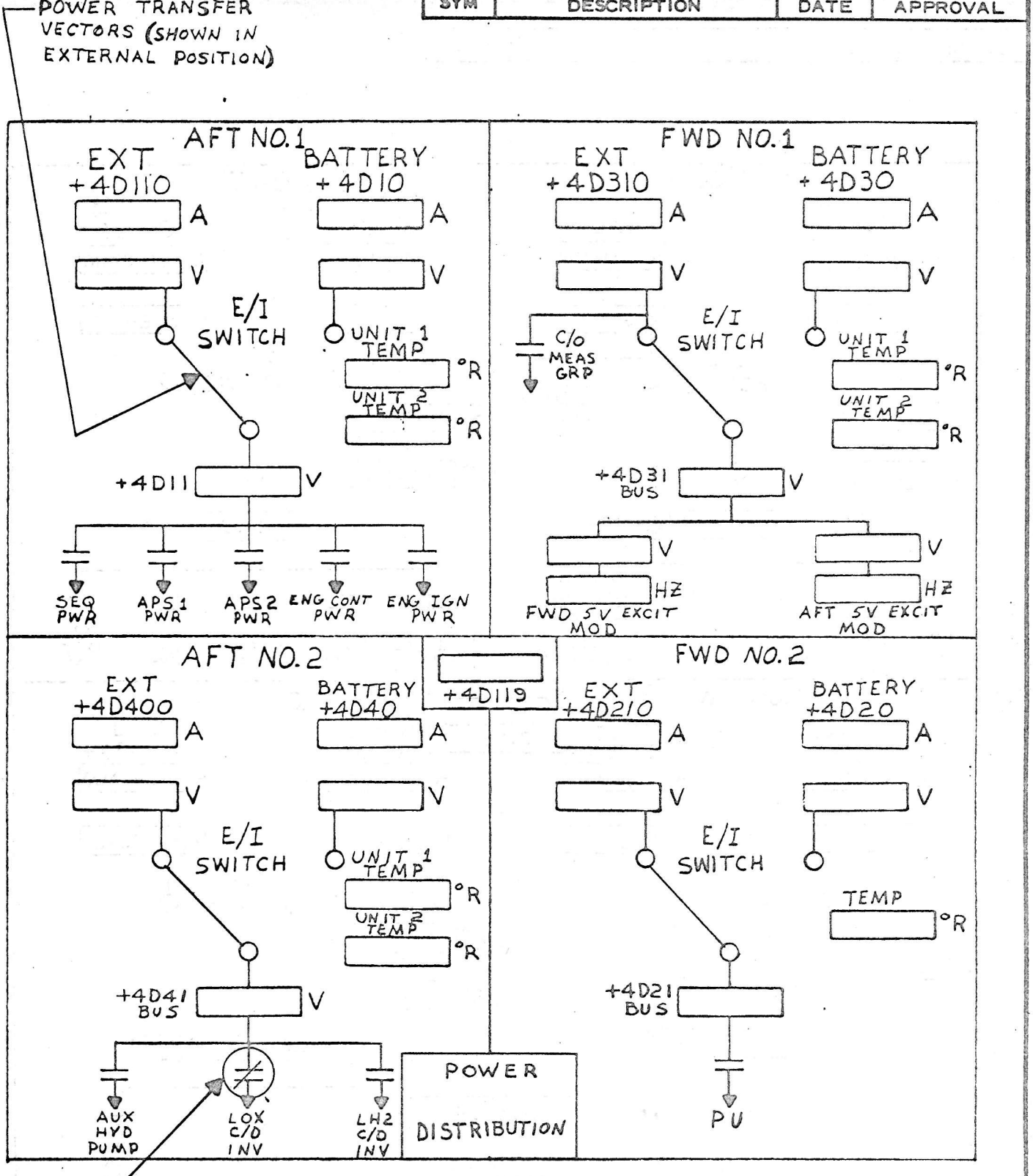

FIGURE 2

CODE IDENT NO	DWG SIZE	73V1623
	A	SHEET 9 of 10

REVISIONS			
SYM	DESCRIPTION	DATE	APPROVAL

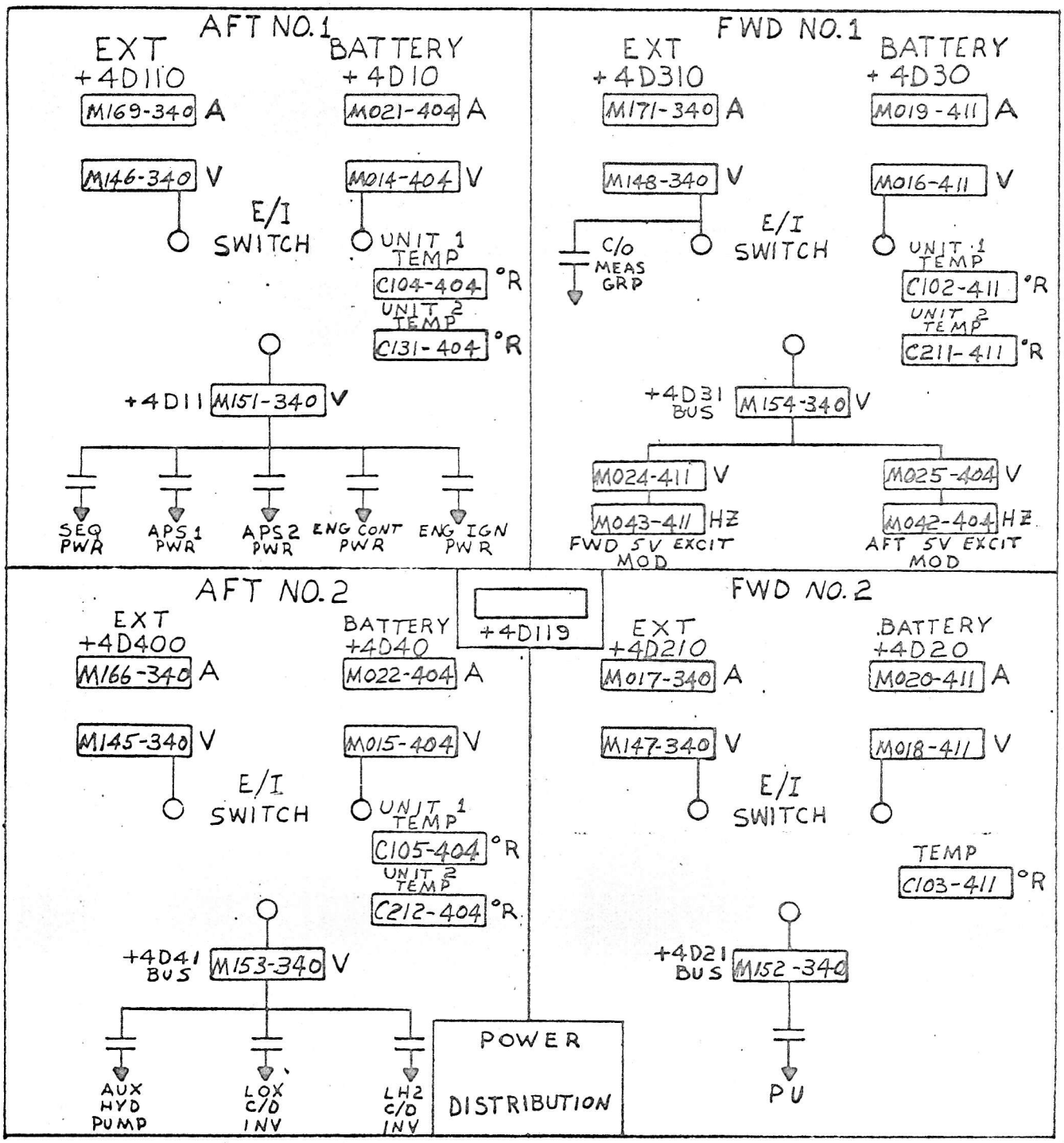

FIGURE 3

CODE IDENT NO	DWG SIZE	73V1623
	A	SHEET 10 of 10

REVISIONS			
SYM	DESCRIPTION	DATE	APPROVAL

This ATOLL Program (VACM) has been deleted until information is made available indicating what new ATOLL Program will be used as a replacement.

MSFC FORM 422-3 (VERTICAL) (NOVEMBER 1962) CONTINUATION SHEET

REVISIONS			
SYM	DESCRIPTION	DATE	APPROVAL

This ATOLL Program (VAEA) has been deleted until information is made available indicating what new ATOLL Program will be used as a replacement.

CODE IDENT NO	DWG SIZE	73V1625
	A	SHEET 1 of 1

REVISIONS			
SYM	DESCRIPTION	DATE	APPROVAL

This ATOLL Program (VARE) has been deleted until information is made available indicating what new ATOLL Program will be used as a replacement.

REVISIONS			
SYM	DESCRIPTION	DATE	APPROVAL

This ATOLL Program (VAPR) has been deleted until information is made available indicating what new ATOLL Program will be used as a replacement.

MSFC FORM 422 (VERTICAL) (AUGUST 1960)

NOTICE — When Government drawings, specifications, or other data are used for any purpose other than in connection with a definitely related Government procurement operation, the United States Government thereby incurs no responsibility nor obligation whatsoever; and the fact that the Government may have formulated, furnished, or in any way supplied the said drawings specifications or other data is not to be regarded by implication or otherwise as in any manner licensing the holder or any other person or corporation, or conveying any rights or permission to manufacture, use, or sell any patented invention that may in any way be related thereto.

APPLICATION		PART No.	M F	REVISIONS			
NEXT ASSY	USED ON			SYM	DESCRIPTION	DATE	APPROVAL

AS-503

VERIFICATION PROCEDURE

S-IC POWER ON (WAPO)

73V1628

UNLESS OTHERWISE SPECIFIED DIMENSIONS ARE IN INCHES TOLERANCES ON: FRACTIONS DECIMALS ANGLES	ORIGINAL DATE OF DRAWING 7/22/68	S-IC POWER ON (WAPO) AS-503	GEORGE C. MARSHALL SPACE FLIGHT CENTER NATIONAL AERONAUTICS AND SPACE ADMINISTRATION HUNTSVILLE, ALABAMA
MATERIAL	DRAFTSMAN / CHECKER TRACER / CHECKER ENGINEER / ENGINEER		
HEAT TREATMENT	SUBMITTED G. N. COKER		
FINAL PROTECTIVE FINISH	APPROVED H. B. HARRISON	SCALE UNIT WT	DWG SIZE A 73V1628 SHEET 1 OF 5

REVISIONS			
SYM	DESCRIPTION	DATE	APPROVAL

1.0 SCOPE

THIS PROGRAM PROVIDES THE CAPABILITY OF POWERING UP THE S-IC STAGE AND ESE AND MONITORING FOR CORRECT DISCRETE ACTION.

2.0 APPLICABLE GOVERNMENT FURNISHED DOCUMENTS

AESS S-IC POWER ESE SATURN V	40M13614
AESS S-IC ESE	40M10616
AESS S-IC STAGE SIMULATOR	40M34240
AESS S-IC MSE SIMULATOR	40M13442

3.0 GENERAL NOTES

NONE

4.0 PREREQUISITES

4.1 ALL S-IC SYSTEMS WILL BE IN THE ELECTRICAL SIMULATE OR MAB MODE.

4.2 THE STAGE WILL NOT BE POWERED UP, BUT THE FACILITY CIRCUIT BREAKERS WILL BE CLOSED.

4.3 ON POWER SWITCHING PANEL PLACE +20D111 POWER (S1) AND +20D211 POWER (S2) TO THE ON POSITION.

4.4 VERIFY THAT CARD KEY NO. 1 OR 9 IS INSTALLED IN THE SANDERS DISPLAY CONSOLE.

REVISIONS			
SYM	DESCRIPTION	DATE	APPROVAL

5.0 PROCEDURE

5.1 PLACE ALL CONSOLE SWITCHES IN THE CONFIGURATION SPECIFIED IN PROCEDURE V-21038, REV. 002 DATED 29 DECEMBER 1967.

5.2 CALL UP THE PROGRAM BY TYPING IN $TPRQWAPO ON THE CONSOLE KEYBOARD AND DEPRESSING THE "EDIT EXECUTE" PUSHBUTTON.

5.2.1 AFTER PROGRAM HAS LOADED ENTER $PA TO INITIATE PROGRAM.

5.3 THE PROGRAM WILL MAKE AN INITIAL SCAN. IF AN ERROR OCCURS DURING THE INITIAL SCAN, THE FOLLOWING MESSAGE WILL BE DISPLAYED:

INITIAL CONDITION ERROR
ENTER $PR1 TO RESCAN
ENTER $PR2 TO CONTINUE WITHOUT CORRECTING ERROR
ENTER $PR3 TO TERMINATE
ENTER $PR4 TO LAPSE INTO SEMI FOR OTHER ENTRY

5.4 IF INITIAL SCAN IS O.K., THE FOLLOWING MESSAGE IS DISPLAYED:

C1NE - VERIFY PREPS COMPLETE ANNOUNCE THAT S-IC STAGE POWER WILL BE APPLIED IN APPROXIMATELY 2 MINUTES.

5.4.1 ENTER $PA TO CONTINUE. THE PROGRAM WILL ISSUE S-IC PLUG SUPERVISION POWER ON.

5.5 ENTER $PR1 TO CONTINUE. DEPRESS 1D100 START BUTTON WITHIN 20 SECONDS.

5.6 THE VOLTAGE OF THE 1D100 POWER SUPPLY WILL BE DISPLAYED ON THE CONSOLE SCREEN. OPTIONS ARE GIVEN TO RETEST, TERMINATE OR LAPSE INTO "SEMI" MODE FOR OTHER ENTRY.

5.7 THE FOLLOWING MESSAGE WILL BE DISPLAYED:

ENTER $PR1 TO CONTINUE
C1PP - PLACE 1D100 OUTPUT POWER SWITCH TO ON WITHIN 20 SECONDS
ENTER $PR3 TO TERMINATE
ENTER $PR4 TO LAPSE INTO SEMI FOR OTHER ENTRY.

5.8 ENTER $PR1 AND TURN ON 1D100 OUTPUT POWER WITHIN 20 SECONDS.

5.9 THE VOLTAGE OF THE 1D110 BUS WILL BE DISPLAYED.

REVISIONS			
SYM	DESCRIPTION	DATE	APPROVAL

5.10 THE FOLLOWING MESSAGE WILL BE DISPLAYED:

C1DE - VERIFY FOLLOWING DEE ON
3121, 3134, 3132, 3175,
3176, 3207, 3133

ENTER $PR1 TO CONTINUE AND
C1PP - DEPRESS 1D200 START
BUTTON WITHIN 20 SEC.
ENTER $PR3 TO TERMINATE
ENTER $PR4 TO LAPSE INTO
SEMI FOR OTHER ENTRY

5.11 ENTER $PR1 AND DEPRESS 1D200 START BUTTON WITHIN 20 SECONDS.

5.12 THE VOLTAGE OF THE 1D200 POWER SUPPLY WILL BE DISPLAYED. OPTIONS ARE GIVEN TO RETEST, TERMINATE, OR LAPSE INTO SEMI MODE FOR OTHER ENTRY.

5.13 THE FOLLOWING MESSAGE WILL BE DISPLAYED:

ENTER $PR1 TO CONTINUE AND
C1PP - PLACE 1D200 OUTPUT
POWER SWITCH TO ON
WITHIN 20 SECONDS
ENTER $PR3 TO TERMINATE
ENTER $PR4 TO LAPSE INTO
SEMI FOR OTHER ENTRY

5.14 ENTER $PR1 AND PLACE 1D200 OUTPUT POWER SWITCH ON WITHIN 20 SECONDS.

5.15 THE VOLTAGE OF THE 1D210 BUS WILL BE DISPLAYED.

5.16 THE FOLLOWING MESSAGE WILL BE DISPLAYED:

C1SN - VERIFY STAGE PERSONNEL
ARE READY FOR S-IC
STAGE POWER
ENTER $PR1 TO CONTINUE
ENTER $PR3 TO TERMINATE
ENTER $PR4 TO LAPSE INTO
SEMI FOR OTHER ENTRY

5.17 ENTER $PR1 TO CONTINUE THE TEST.

5.18 THE PROGRAM WILL TURN THE 1D119 INDICATION BUS ON, AND TEST FOR STAGE LOGIC ZERO.

REVISIONS			
SYM	DESCRIPTION	DATE	APPROVAL

5.19 THE FOLLOWING MESSAGE WILL BE DISPLAYED:

C1NP - VERIFY 1D119 METER READS 28 VDC NOMINAL
C1DE - VERIFY FOLLOWING DEE ON - 3143, 3145, 3196
C1NP - POSITION METER SELECT SWS TO 1D11 AND 1D21
ENTER $PR1 TO APPLY PRELAUNCH POWER
ENTER $PR3 TO TERMINATE
ENTER $PR4 TO LAPSE INTO SEMI FOR OTHER ENTRY

5.20 ENTER $PR1 TO APPLY PRELAUNCH POWER.

5.21 THE VOLTAGE OF THE 1D11 BUS WILL BE DISPLAYED. NO ERROR MESSAGE WILL OCCUR IF VOLTAGE IS BETWEEN 26.0 VDC AND 30.0 VDC.

5.22 THE VOLTAGE OF THE 1D21 BUS WILL BE DISPLAYED. NO ERROR MESSAGE WILL OCCUR IF VOLTAGE IS BETWEEN 26.0 VDC AND 30.0 VDC.

5.23 THE PROGRAM TESTS FOR 1D111 CURRENT LESS THAN 25 AMPS. AN ERROR MESSAGE IS DISPLAYED IF THE CURRENT IS GREATER THAN 25 AMPS.

5.24 THE PROGRAM TESTS FOR 1D211 CURRENT LESS THAN 25 AMPS. AN ERROR MESSAGE IS DISPLAYED IF THE CURRENT IS GREATER THAN 25 AMPS.

5.25 THE FOLLOWING MESSAGE IS DISPLAYED:

C1NE - ANNOUNCE S-IC STAGE POWER HAS BEEN APPLIED
C1NP - VERIFY 1D131 AND 1D151 METERS READ 28 VDC NOMINAL.
ENTER $PR1 TO CONTINUE
ENTER $PR3 TO TERMINATE
ENTER $PR4 TO LAPSE INTO SEMI FOR OTHER ENTRY

5.26 ENTER $PR1 TO CONTINUE THE TEST.

5.26.1 THE PROGRAM WILL ISSUE PAM/PCM TM ON, MEAS RACKS OPER. ON, AND MEAS. RACK R+D ON.

5.27 THE MESSAGE "WAPO S-IC POWER ON IS COMPLETE" IS DISPLAYED.

5.28 ENTER $PR3 TO TERMINATE THE TEST.

5.29 PROGRAM NEBM WILL START AFTER WAPO HAS TERMINATED. TO TERMINATE NEBM TYPE $FUNTNEBM AND DEPRESS "EDIT EXECUTE" ON DISPLAY CONSOLE.

MSFC FORM 422 (VERTICAL) (AUGUST 1960)

NOTICE — When Government drawings, specifications, or other data are used for any purpose other than in connection with a definitely related Government procurement operation, the United States Government thereby incurs no responsibility nor obligation whatsoever; and the fact that the Government may have formulated, furnished, or in any way supplied the said drawings specifications or other data is not to be regarded by implication or otherwise as in any manner licensing the holder or any other person or corporation, or conveying any rights or permission to manufacture, use, or sell any patented invention that may in any way be related thereto.

APPLICATION		PART No.	M F	REVISIONS			
NEXT ASSY	USED ON			SYM	DESCRIPTION	DATE	APPROVAL

AS-503

VERIFICATION PROCEDURE

S-IC POWER TRANSFER (WAPX)

73V1629

UNLESS OTHERWISE SPECIFIED DIMENSIONS ARE IN INCHES TOLERANCES ON: FRACTIONS DECIMALS ANGLES	ORIGINAL DATE OF DRAWING 7/22/68 DRAFTSMAN / CHECKER TRACER / CHECKER ENGINEER / ENGINEER	S-IC POWER TRANSFER (WAPX) AS-503	GEORGE C. MARSHALL SPACE FLIGHT CENTER NATIONAL AERONAUTICS AND SPACE ADMINISTRATION HUNTSVILLE, ALABAMA
MATERIAL	SUBMITTED G. N. COKER		
HEAT TREATMENT	APPROVED H. B. HARRISON	SCALE / UNIT WT	DWG SIZE A — 73V1629
FINAL PROTECTIVE FINISH			SHEET 1 OF 3

REVISIONS			
SYM	DESCRIPTION	DATE	APPROVAL

1.0 SCOPE

THIS PROGRAM PROVIDES AN AUTOMATIC POWER TRANSFER TEST FOR THE S-IC STAGE.

2.0 APPLICABLE GOVERNMENT FURNISHED DOCUMENTS

AESS S-IC ESE	40M10616
AESS S-IC STAGE SIMULATOR	40M34240
AESS S-IC MSE SIMULATOR	40M13442

3.0 GENERAL NOTES

NONE

4.0 PREREQUISITES

4.1 ALL S-IC SYSTEMS WILL BE IN THE ELECTRICAL SIMULATE OR MAB MODE.

4.2 THE S-IC STAGE WILL BE POWERED UP.

4.3 ON THE NETWORKS PANEL, PLACE BATTERY INSTALLED INDICATION ENABLE SWITCH S16 AND SIMULATED LAUNCH SWITCH S9 TO THE "ON" POSITION.

4.4 ON THE MEASURING AND RF PANEL, PLACE R&D NO. 1 (S19) AND R&D NO. 2 (S20) TO THE "ON" POSITION.

4.5 ON THE MEASURING AND RF PANEL, PLACE SWITCHES S14, S15, S25, S26, S27, S28, S31, S34, S35 AND S36 TO THE "ON" POSITION AND SWITCHES S29 AND S37 TO THE "COAX" POSITION.

4.6 ON POWER SWITCHING PANEL, PLACE 1D10 POWER (S10) TO "ON" AND 1D20 POWER (S11) TO "ON".

4.7 ON THE S-IC CAMERA CONTROL PANEL, PLACE TV SYSTEM SWITCH S10 TO THE "ON" POSITION.

4.8 VERIFY THAT CARD KEY 1 OR 9 IS INSTALLED IN THE SANDERS DISPLAY CONSOLE.

REVISIONS			
SYM	DESCRIPTION	DATE	APPROVAL

5.0 PROCEDURE

5.1 CALL UP THE PROGRAM BY TYPING $TPRQWAPX ON THE DISPLAY CONSOLE. DEPRESS THE "EDIT EXECUTE" PUSHBUTTON.

5.2 INITIATE PROGRAM BY TYPING $PA ON DISPLAY CONSOLE AND DEPRESSING THE "EDIT EXECUTE" PUSHBUTTON.

5.3 THE PROGRAM WILL TURN ON SSB TM SYSTEMS 1 AND 2 AND TM CALIBRATOR.

5.4 PROGRAM TESTS 1D110 BUS FOR VOLTAGE BETWEEN 27 AND 32 VOLTS.

5.5 PROGRAM TESTS 1D11 BUS FOR VOLTAGE BETWEEN 26 AND 30 VOLTS.

5.6 PROGRAM TESTS 1D10 BATTERY BUS FOR VOLTAGE GREATER THAN 29 VOLTS.

5.7 PROGRAM TESTS 1D210 BUS FOR VOLTAGE BETWEEN 27 AND 32 VOLTS.

5.8 PROGRAM TESTS 1D21 BUS FOR VOLTAGE BETWEEN 26 AND 30 VOLTS.

5.9 PROGRAM TESTS 1D20 BATTERY BUS FOR VOLTAGE GREATER THAN 29 VOLTS.

5.10 PROGRAM TRANSFERS S-IC STAGE TO INTERNAL.

5.11 1D10 AND 1D20 BATTERY VOLTAGE AND CURRENT READINGS ARE DISPLAYED.

5.12 PROGRAM TRANSFERS S-IC STAGE BACK TO EXTERNAL AFTER 20 SECONDS.

5.13 ANY BUS OF STEPS 5.4 THROUGH 5.9 THAT WERE OUT OF TOLERANCE DURING POWER TRANSFER ARE DISPLAYED WITH AN ERROR MESSAGE.

5.14 THE PROGRAM WILL TURN OFF SSB TM SYSTEMS 1 AND 2 AND TM CALIBRATOR.

5.15 PROGRAM TERMINATES ITSELF.

5.16 RESTORE ALL SWITCHES TO THEIR ORIGINAL POSITIONS PRIOR TO PROGRAM EXECUTION.

MSFC FORM 422 (VERTICAL) (AUGUST 1960)

NOTICE — When Government drawings, specifications, or other data are used for any purpose other than in connection with a definitely related Government procurement operation, the United States Government thereby incurs no responsibility nor obligation whatsoever; and the fact that the Government may have formulated, furnished, or in any way supplied the said drawings specifications or other data is not to be regarded by implication or otherwise as in any manner licensing the holder or any other person or corporation, or conveying any rights or permission to manufacture, use, or sell any patented invention that may in any way be related thereto.

APPLICATION		PART No.	M F	REVISIONS			
NEXT ASSY	USED ON			SYM	DESCRIPTION	DATE	APPROVAL

AS-503

VERIFICATION PROCEDURE

S-II SEPARATION SYSTEM FUNCTIONAL (QASP)

73V1630

UNLESS OTHERWISE SPECIFIED DIMENSIONS ARE IN INCHES TOLERANCES ON: FRACTIONS DECIMALS ANGLES	ORIGINAL DATE OF DRAWING 7/22/68 DRAFTSMAN / CHECKER TRACER / CHECKER ENGINEER / ENGINEER	S-II SEPARATION SYSTEM FUNCTIONAL (QASP)	GEORGE C. MARSHALL SPACE FLIGHT CENTER NATIONAL AERONAUTICS AND SPACE ADMINISTRATION HUNTSVILLE, ALABAMA
MATERIAL	SUBMITTED Julius B. Campbell J. B. CAMPBELL		
HEAT TREATMENT			
FINAL PROTECTIVE FINISH	APPROVED H. B. Harrison H. B. HARRISON	SCALE UNIT WT	DWG SIZE A 73V1630 SHEET 1 OF 4

REVISIONS			
SYM	DESCRIPTION	DATE	APPROVAL

1.0 SCOPE

THIS PROCEDURE WILL VERIFY THE NETWORK SYSTEM PROGRAM, "S-II SEPARATION SYSTEM FUNCTIONAL, QASP".

2.0 APPLICABLE GOVERNMENT FURNISHED DOCUMENTS

DRAWINGS

AESS S-II SATURN V	40M10590
AESS S-II STAGE SIMULATORS	40M34242
OPERATOR REFERENCE MANUAL FOR SLCC PROGRAMMING SYSTEM, VEHICLE SA-503	IBM NO. 68-F11-0003
SPECIFICATIONS FOR THE TEST PROGRAM FOR THE SATURN V LCC VOLUMES I AND II	MSFC NO. 1-4-441-9 IBM NO. 66-F11-0006

3.0 GENERAL NOTES

QASP WILL BE CALLED UP AND ALL PROGRAM OPTIONS WILL BE EXERCISED AND HARDWARE RESPONSE TO COMPUTER STIMULI WILL BE MONITORED.

4.0 PREREQUISITES

NONE

REVISIONS			
SYM	DESCRIPTION	DATE	APPROVAL

5.0 PROCEDURE

5.1 S-II SHALL BE POWERED UP PER S.O.P. 80X0201.

5.2 IU SHALL BE POWERED UP AND SWITCH SELECTOR ON LINE.

5.3 AT SANDERS DISPLAY CONSOLE NO. 6 ENTER S-II SEPARATION SYSTEM FUNCTIONAL (QASP) BY ENTERING $TPRQ QASP.

5.4 DURING QASP VERIFICATION, THE FOLLOWING MDO'S AND DDAS DISCRETES WILL BE UTILIZED. MDI's CAN BE VERIFIED BY DEE-6 PRINTOUTS AND VISUAL INDICATIONS ON THE S-II PANELS.

SIGNAL	NOMENCLATURE
MDI	
2522	STAGE LOCIG RESET
1008	SEPARATION SYSTEM RESET
1396	SWITCH SELECTOR ZERO
2310	S-II STAGE SELECT INDICATOR
816	REG. CONTROL BIT #1 VERIFY INDICATOR
817	REG. CONTROL BIT #2 VERIFY INDICATOR
818	REG. CONTROL BIT #3 VERIFY INDICATOR
819	REG. CONTROL BIT #4 VERIFY INDICATOR
820	REG. CONTROL BIT #5 VERIFY INDICATOR
821	REG. CONTROL BIT #6 VERIFY INDICATOR
822	REG. CONTROL BIT #7 VERIFY INDICATOR
823	REG. CONTROL BIT #8 VERIFY INDICATOR
DDAS	
EP1A2-26R03-09	SWITCH SELECTOR REGISTER TEST
DP1A0-19G00-01	BIT NO. 1 VERIFY (CHANNEL)
DP1A0-19G00-02	BIT NO. 2 VERIFY (CHANNEL)
DP1A0-19G00-03	BIT NO. 3 VERIFY (CHANNEL)
DP1A0-19G00-04	BIT NO. 4 VERIFY (CHANNEL)
DP1A0-19G00-05	BIT NO. 5 VERIFY (CHANNEL)
DP1A0-19G00-06	BIT NO. 6 VERIFY (CHANNEL)
DP1A0-19G00-07	BIT NO. 7 VERIFY (CAHNNEL)
DP1A0-19G00-08	BIT NO. 8 VERIFY (CAHNNEL)
EP1A2-26R02-06	FIRING COMMAND RESET
BP1B0-24R03-10	ULLAGE ROCKETS EBW NO. 1 FIRED
BP1B0-24R03-01	ULLAGE ROCKETS EBW NO. 2 FIRED
BP1B0-25R02-01	2ND. SEP. EBW NO. 1 FIRED
BP1B0-25R02-02	2ND. SEP. EBW NO. 2 FIRED
BP1B0-24R04-06	S-II/S-IVB SEP. EBW NO. 1 FIRED
BP1B0-24R04-07	S-II/S-IVB SEP. EBW NO. 2 FIRED
BP1B0-25R02-03	RETRO-ROCKETS EBW NO. 1 FIRED
BP1B0-25R02-04	RETRO-ROCKETS EBW NO. 2 FIRED

REVISIONS			
SYM	DESCRIPTION	DATE	APPROVAL

SIGNAL	NOMENCLATURE
DDAS	
BP1A2-20-05-00	ULLAGE CHG. VOLTAGE EBW NO. 1
BP1A2-20-08-00	ULLAGE CHG. VOLTAGE EBW NO. 2
BP1B0-23-09-00	SECOND SEP. CHG. VOLTAGE EBW NO. 1
BP1B0-23-10-00	SECOND SEP. CHG. VOLTAGE EBW NO. 2
BP1B0-01-02-00	S-II/S-IVB SEP. CHG. VOLTAGE EBW NO. 1
BP1B0-01-03-00	S-II/S-IVB SEP. CHG. VOLTAGE EBW NO. 2
BP1B0-18-03-00	RETRO-ROCKET CHG. VOLTAGE EBW NO. 1
BP1B0-18-09-00	RETRO-ROCKET CHG. VOLTAGE EBW NO. 2
MDO	
1061	S-II STAGE LOGIC RESET
1234	SEPARATION SYSTEM RESET
1235	LIFTOFF SIMULATED
1236	EBW PULSE SENSOR RESET
1237	EBW PULSE SENSOR SELF TEST
1172	ENGINE LOGIC RESET
768	REG. CONT. BIT #1 ADDRESS
769	REG. CONT. BIT #2 ADDRESS
770	REG. CONT. BIT #3 ADDRESS
771	REG. CONT. BIT #4 ADDRESS
772	REG. CONT. BIT #5 ADDRESS
773	REG. CONT. BIT #6 ADDRESS
774	REG. CONT. BIT #7 ADDRESS
775	REG. CONT. BIT #8 ADDRESS
776	IU RESET SWITCH ON
736	S-II STAGE SELECT
CHANNEL	
11	S-II ORDNANCE ARM
24	ULLAGE TRIGGER
23	SECOND PLANE SEPARATION
8	S-II/S-IVB ORDNANCE ARM
5	S-II/S-IVB SEPARATION
18	ENGINE CUTOFF
31	ALL ENGINE CUTOFF RESET

MSFC FORM 422 (VERTICAL) (AUGUST 1960)

NOTICE — When Government drawings, specifications, or other data are used for any purpose other than in connection with a definitely related Government procurement operation, the United States Government thereby incurs no responsibility nor obligation whatsoever; and the fact that the Government may have formulated, furnished, or in any way supplied the said drawings specifications or other data is not to be regarded by implication or otherwise as in any manner licensing the holder or any other person or corporation, or conveying any rights or permission to manufacture, use, or sell any patented invention that may in any way be related thereto.

APPLICATION		PART No.	M F	REVISIONS			
NEXT ASSY	USED ON			SYM	DESCRIPTION	DATE	APPROVAL

AS-503

PROGRAM VERIFICATION

APS FIRING TEST (CT00)

73V1701

UNLESS OTHERWISE SPECIFIED DIMENSIONS ARE IN INCHES TOLERANCES ON: FRACTIONS DECIMALS ANGLES	ORIGINAL DATE OF DRAWING 7/19/68 DRAFTSMAN / CHECKER TRACER / CHECKER ENGINEER / ENGINEER	APS FIRING TEST (CT00) AS-503	GEORGE C. MARSHALL SPACE FLIGHT CENTER NATIONAL AERONAUTICS AND SPACE ADMINISTRATION HUNTSVILLE, ALABAMA
MATERIAL	SUBMITTED E. N. Bryan E. N. BRYAN		
HEAT TREATMENT			
FINAL PROTECTIVE FINISH	APPROVED R. A. Drakey R. A. DRAKEY	SCALE UNIT WT	DWG SIZE A 73V1701 SHEET 1 OF 4

REVISIONS			
SYM	DESCRIPTION	DATE	APPROVAL

APS FIRING TEST PROGRAM (CT00)

1.0 SCOPE

THIS PROCEDURE WILL VERIFY THE CONTROL SYSTEM PROGRAM "APS FIRING TEST (CT00)".

2.0 APPLICABLE GOVERNMENT FURNISHED DOCUMENTS

DRAWINGS	
AESS LVDA INTERFACE	50M36401
AESS INSTRUMENT UNIT ESE SATURN V	40M14490
INSTRUMENT UNIT ELECTRICAL SCHEMATICS	40M33221
DOCUMENTS	
IP & C S-IU-503	6009048
TEST PROGRAM SPECIFICATIONS SATURN V LAUNCH COMPUTER COMPLEX AS-503	67-F11-0008
PRELAUNCH CHECKOUT SPECIFICATIONS AND CRITERIA FOR S-IU-503	67-257-0004
OPERATOR REFERENCE MANUAL FOR SLCC PROGRAMMING SYSTEM	68-F11-0003

3.0 GENERAL NOTES

CT00 WILL BE ENTERED FROM KEYBOARD IN ACCORDANCE WITH THE IBM OPERATOR REFERENCE MANUAL. ALL PROGRAM OPTIONS WILL BE EXERCISED AND HARDWARE RESPONSE TO COMPUTER STIMULI WILL BE MONITORED.

4.0 PREREQUISITES

NONE

REVISIONS			
SYM	DESCRIPTION	DATE	APPROVAL

5.0 PROCEDURE

APS FIRING TEST PROGRAM (CTOO)

5.1 POWER INSTRUMENT UNIT UNTIL "GROUND POWER" INDICATION IS RECEIVED.

5.2 VERIFY THAT THE "LVDC POWER ON" INDICATION (DS16) ON THE "GUIDANE COMPUTER PANEL" 601-608A13 IS NOT BEING RECEIVED. IF THE LVDC IS POWERED UP, ENTER FT04, POWER OFF OPTION, IN ACCORDANCE WITH 2-1 OF SECTION 3 OF THE IBM USER MANUAL.

5.3 REQUEST THAT THE S-IVB STAGE BE POWERED UNTIL "READY FOR POWER TRANSFER" INDICATION IS RECEIVED.

5.4 REQUEST THAT THE "AUX HYD PUMP SWITCH" (S3) ON THE "S-IVB HYDRAULICS PANEL" 601-407A1 BE PLACED TO THE ON POSITION.

5.5 REQUEST THAT THE "APS ENGINE VALVE POWER" SWITCH (S44) ON THE "S-IVB APS LAUNCH AND MONITOR PANEL" 601-419A1 BE PLACED TO THE ON POSITION.

5.6 VERIFY THAT THE "AUXILIARY PROPULSION SYSTEM CONTROL POWER ON "INDICATION (DS1) ON THE "S-IVB ENGINE DEFLECTION PANEL 601-607A10 HAS BEEN RECEIVED.

5.7 PLACE THE "FLIGHT CONTROL COMPUTER POWER ON" SWITCH (S3) ON "THE FLIGHT CONTROL COMPUTER PANEL" 601-607A7 TO THE ON POSITION.

5.8 VERIFY THE FOLLOWING SWITCHES ON THE "CONTROL COMPUTER INPUT SUBSTITUTE" PANEL, 601-607A6:

(a) S-IVB COAST TEST-ON
(b) ST-124M INPUT SUBSTITUTE - ON
(c) TEST INPUT A - ON
(d) TEST INPUT B - ON
(e) STEP ENABLE - ON
(f) PITCH, YAW, AND ROLL AXIS SELECT - AUTO
(g) RAMP SWITCH TO POSITIVE UNTIL RAMPS OF APPROXIMATELY 20 VOLTS ARE MONITORED.

REVISIONS			
SYM	DESCRIPTION	DATE	APPROVAL

5.10 AT SANDERS DISPLAY CONSOLE NO. 2 KEY 4 ENTER APS FIRING TEST PROGRAM (CT00) IN ACCORDANCE WITH THE IBM OPERATOR REFERENCE MANUEL. EXERCISE THE FOLLOWING OPTIONS AND MONITOR FOR THE APPROPRIATE INDICATIONS. DATA OBTAINED SHOULD BE WITHIN 6% OF THE LISTED VALUES.

A. TERMINATE
B. RESTART
C. PITCH PULSE PATTERN

$\pm\psi_P$		$\pm\dot{\phi}_P$		APS ENGINES
FCC PANEL PITCH ERROR	CCIS PANEL TEST INPUT	FCC PANEL PITCH RATE	CCIS PANEL TEST INPUT	S-IVB ENGINE DEFLECTION PANEL
+1 DEG	+0.8 VDC	+0.2 DEC/SEC	+0.9 VDC	Ip (BLINKS)
-1	-0.8	-0.2	-0.9	IIIp (BLINKS)
+1.6	+1.26	+0.32	+1.44	Ip (FULL ON)
-1.6	-1.26	-0.32	-1.44	IIIp (FULL ON)

D. ROLL PULSE PATTERN

$\pm\psi_R$		$\pm\dot{\phi}_R$		APS ENGINES
FCC PANEL ROLL ERROR	CCIS PANEL TEST INPUT	FCC PANEL ROLL RATE	CCIS PANEL TEST INPUT	S-IVB ENGINE DEFLECTION PANEL
+1 DEG	+0.8 VDC	+0.2 DEC/SEC	+0.9 VDC	$^{I}_{II} - ^{III}_{IV}$ (BLINKS)
-1	-0.8	-0.2	-0.9	$^{I}_{IV} - ^{III}_{II}$ (BLINKS)
+1.6	+1.26	+0.32	+1.44	$^{I}_{II} - ^{III}_{IV}$ (FULL ON)
-1.6	-1.26	-0.32	-1.44	$^{I}_{IV} - ^{III}_{II}$ (FULL ON)

E. ULLAGE ROCKET COMMAND NO. 1 PULSE PATTERN

F. ULLAGE ROCKET COMMAND NO. 2 PULSE PATTERN

MSFC FORM 422 (VERTICAL) (AUGUST 1960)

NOTICE — When Government drawings, specifications, or other data are used for any purpose other than in connection with a definitely related Government procurement operation, the United States Government thereby incurs no responsibility nor obligation whatsoever; and the fact that the Government may have formulated, furnished, or in any way supplied the said drawings specifications or other data is not to be regarded by implication or otherwise as in any manner licensing the holder or any other person or corporation, or conveying any rights or permission to manufacture, use, or sell any patented invention that may in any way be related thereto.

APPLICATION		PART No.	M F	REVISIONS			
NEXT ASSY	USED ON			SYM	DESCRIPTION	DATE	APPROVAL

AS-503

PROGRAM VERIFICATION

FLIGHT CONTROL RAMP SUBSTITUTE (CTA1)

73V1704

UNLESS OTHERWISE SPECIFIED DIMENSIONS ARE IN INCHES TOLERANCES ON: FRACTIONS DECIMALS ANGLES	ORIGINAL DATE OF DRAWING 7/19/68 DRAFTSMAN / CHECKER TRACER / CHECKER ENGINEER / ENGINEER SUBMITTED Don J Ward for E. N. BRYAN APPROVED R. C. Drakey R. A. DRAKEY	FLIGHT CONTROL RAMP SUBSTITUTE (CTA1) AS-503	GEORGE C. MARSHALL SPACE FLIGHT CENTER NATIONAL AERONAUTICS AND SPACE ADMINISTRATION HUNTSVILLE, ALABAMA
MATERIAL			
HEAT TREATMENT			
FINAL PROTECTIVE FINISH		SCALE / DWG SIZE A / 73V1704 UNIT WT / SHEET 1 OF 4	

REVISIONS			
SYM	DESCRIPTION	DATE	APPROVAL

FLIGHT CONTROL RAMP SUBSTITUTE PROGRAM (CTA1)

1.0 SCOPE

THIS PROCEDURE WILL VERIFY THE FLIGHT CONTROL RAMP SUBSTITUTE TEST PROGRAM (CTA1).

2.0 APPLICABLE GOVERNMENT FURNISHED DOCUMENTS

DRAWINGS	
AESS LVDA INTERFACE	50M36401
AESS INSTRUMENT UNIT ESE SATURN V	40M14490
INSTRUMENT UNIT ELECTRICAL SCHEMATICS	40M33221
DOCUMENTS	
IP & C S-IU-503	6009048
TEST PROGRAM SPECIFICATIONS SATURN V LAUNCH COMPUTER COMPLEX AS-503	67-F11-0008
PRELAUNCH CHECKOUT SPECIFICATIONS AND CRITERIA FOR S-IU-503	68-257-0004
OPERATOR REFERENCE MANUAL FOR SLCC PROGRAMMING SYSTEM	68-F11-0003

3.0 GENERAL NOTES

CTA1 WILL BE ENTERED FROM KEYBOARD IN ACCORDANCE WITH THE IBM OPERATOR REFERENCE MANUAL. ALL PROGRAM OPTIONS WILL BE EXERCISED AND HARDWARE RESPONSE TO COMPUTER STIMULI WILL BE MONITORED.

4.0 PREREQUISITES

NONE

5.0 PROCEDURE

5.1 POWER INSTRUMENT UNIT UNTIL "GROUND POWER" INDICATION IS RECEIVED.

5.2 REQUEST THAT S-IVB IS POWERED UNTIL "READY FOR POWER TRANSFER" INDICATION IS RECEIVED.

5.3 VERIFY THAT THE "LVDC POWER ON" INDICATION (DS16) ON THE "GUIDANCE COMPUTER PANEL" 60-608A13 IS NOT BEING RECEIVED. IF THE LVDC IS POWERED UP, ENTER FT04, SELECT POWER OFF OPTION, IN ACCORDANCE WITH THE IBM OPERATOR REFERENCE MANUAL.

REVISIONS			
SYM	DESCRIPTION	DATE	APPROVAL

FLIGHT CONTROL RAMP SUBSTITUTE PROGRAM (CTA1)

5.4 REQUEST THAT S-IVB POWER UP STAGE HYDRAULICS TO SUPPORT FLIGHT CONTROL TESTS.

5.5 REQUEST THAT S-II POWERED UNTIL "READY FOR POWER TRANSFER" IS RECEIVED.

5.6 REQUEST S-II TO VERIFY THAT THE "400 CPS ACT. SUB. PWR" SWITCH (S2) ON THE POWER SWITCHING PANEL (601-214A3) IS IN THE ON POSITION.

5.7 VERIFY THAT ON THE S-II ACTUATOR SUBSTITUTE PANEL (34A2) THE "POWER ON" (S1), "S-IC/S-II ENGINE NO. 1" (S2),"S-IC/S-II ENGINE NO. 2" (S3),"S-IC/S-II ENGINE NO. 3" (S4), AND "S-IC/S-II ENGINE NO. 4 (S5) SWITCHES ARE IN THE "ON" POSITION.

5.8 REQUEST THAT S-IC BE POWERED UNTIL "READY FOR POWER TRANSFER" IS RECEIVED.

5.9 REQUEST S-IC TO VERIFY THAT THE "400 CPS ACT. SUBS PWR. ON" SWITCH (S10) ON THE "POWER SWITCH PANEL" 601-114A3 IS IN THE ON POSITION.

5.10 REQUEST S-IC TO VERIFY THAT THE "S-IC 400 CPS POWER ON" SWITCH (S10) ON THE "POWER SWITCHING PANEL" 601-114A3 IS IN THE ON POSITION.

5.11 REQUEST S-IC TO VERIFY THAT THE "400C POWER ON COMMAND" SWITCH (S12) ON THE "S-IC MEASURING AND RF PANEL" 601-111A1 IS IN THE "ON" POSITION.

5.12 VERIFY THAT ON THE "S-IC ACTUATOR SUBSTITUTE PANEL" 5A2 THE "POWER ON" (S1), "S-IC/S-II ENGINE NO. 1" (S2), "S-IC/S-II ENGINE NO. 2" (S3), "S-IC/S-II ENGINE NO. 3"(S4), AND "S-IC/S-II ENGINE NO. 4" (S5) SWITCHES ARE IN THE "ON" POSITION.

5.13 PLACE THE FLIGHT CONTROL COMPUTER POWER SWITCH ON THE FLIGHT CONTROL COMPUTER PANEL (601-607A7) TO THE "ON" POSITION.

REVISIONS			
SYM	DESCRIPTION	DATE	APPROVAL

5.13.1 VERIFY THAT THE "APS CONTROL POWER POWER" INDICATION ON THE S-IVB ENGINE DEFLECTION PANEL 601-607A5 IS OFF.

5.14 AT SANDERS DISPLAY CONSOLE NO. 2 KEY 4 ENTER CTA1 FLIGHT CONTROL RAMP SUBSTITUTE TEST, IN ACCORDANCE WITH THE IBM OPERATOR REFERENCE MANUAL. EXERCISE ALL OPTIONS AND MONITOR THE APPROPRIATE RESPONSE.

NOTE: A BURN MODE MUST BE SELECTED ON THE CCIS PANEL FOR THE STAGE RESPONSE DESIRED.

MSFC FORM 422 (VERTICAL) (AUGUST 1960)

NOTICE — When Government drawings, specifications, or other data are used for any purpose other than in connection with a definitely related Government procurement operation, the United States Government thereby incurs no responsibility nor obligation whatsoever; and the fact that the Government may have formulated, furnished, or in any way supplied the said drawings specifications or other data is not to be regarded by implication or otherwise as in any manner licensing the holder or any other person or corporation, or conveying any rights or permission to manufacture, use, or sell any patented invention that may in any way be related thereto.

APPLICATION		PART No.	M F	REVISIONS			
NEXT ASSY	USED ON			SYM	DESCRIPTION	DATE	APPROVAL

AS-503

VERIFICATION PROCEDURE

GAIN TEST (CTC1)

73V1705

UNLESS OTHERWISE SPECIFIED DIMENSIONS ARE IN INCHES TOLERANCES ON: FRACTIONS DECIMALS ANGLES	ORIGINAL DATE OF DRAWING 7/19/68 DRAFTSMAN / CHECKER TRACER / CHECKER ENGINEER / ENGINEER	GAIN TEST (CTC1) AS-503	GEORGE C. MARSHALL SPACE FLIGHT CENTER NATIONAL AERONAUTICS AND SPACE ADMINISTRATION HUNTSVILLE, ALABAMA
MATERIAL	SUBMITTED for Don J. Ward E. N. BRYAN		
HEAT TREATMENT			
FINAL PROTECTIVE FINISH	APPROVED R. A. Drakey R. A. DRAKEY	SCALE UNIT WT	DWG SIZE A 73V1705 SHEET 1 OF 10

REVISIONS			
SYM	DESCRIPTION	DATE	APPROVAL

FLIGHT CONTROL COMPUTER GAIN TEST (CTC1)

1.0 SCOPE

THIS PROCEDURE WILL VERIFY THE CONTROL COMPUTER GAIN TEST PROGRAM (CTC1).

2.0 APPLICABLE GOVERNMENT FURNISHED DOCUMENTS

DRAWINGS AESS LVDA INTERFACE	50M36401
AESS INSTRUMENT UNIT ESE SATURN V	40M14490
INSTRUMENT UNIT ELECTRICAL SCHEMATICS	40M33221
DOCUMENTS 1P & C S-IU-503	6009048
TEST PROGRAM SPECIFICATIONS SATURN V LAUNCH COMPUTER COMPLEX AS-503	67-F11-0008
PRELAUNCH CHECKOUT SPECIFICATIONS AND CRITERIA FOR S-IU-503	68-257-0004
OPERATOR REFERENCE MANUAL FOR SLCC PROGRAMMING SYSTEM	68-F11-0003

3.0 GENERAL NOTES

CTC1 WILL BE ENTERED FROM KEYBOARD IN ACCORDANCE WITH THE IBM OPERATOR REFERENCE MANUAL. ALL PROGRAM OPTIONS WILL BE EXERCISED AND HARDWARE RESPONSE TO COMPUTER STIMULI WILL BE MONITORED.

4.0 PREREQUISITES

NONE

REVISIONS			
SYM	DESCRIPTION	DATE	APPROVAL

5.0 PROCEDURE

GAIN TEST (CTC1)

5.1 VERIFY THAT THE INSTRUMENT UNIT IS POWERED DOWN.

5.2 VERIFY LVDC (603A28) AND LVDA (603A29) STAGE INTERCONNECTING CABLES ARE INSTALLED ACCORDING TO SHEET 5 OF 40M33220.

5.3 PLACE POWER SWITCH (S1) ON GCP 601-608A13 IN THE "OFF" POSITION.

5.4 NOTIFY POWER ROOM TO PLACE +6D100 AND +6D200 BACK-UP BATTERIES IN THE LOAD CONDITION AND TO CLOSE THE IU CIRCUIT BREAKER.

5.5 START +6D100 AND +6D200 POWER SUPPLIES.

5.6 ACTIVATE POWER-ON SWITCHES ON +6D100 AND +6D200 POWER SUPPLIES. NOTE VOLTAGE INDICATION FOR +6D110 AND +6D210 ON NETWORKS PANEL 601-605A1.

5.7 ACTIVATE BATTERY ENABLE SWITCHES ON +6D100 AND +6D200 POWER SUPPLY PANEL. DEPRESS STOP BUTTONS SIMULTANEOUSLY AND VERIFY BATTERY POWER IS ACTIVATED. VERIFY LIMITS OF +6D110 AND +6D210 ARE 28 VDC (+2.0). DO NOT PROCEED IF LIMITS ARE NOT AS DESCRIBED ABOVE.

5.8 RESET BATTERIES ON 6D100 AND 6D200 POWER SUPPLY PANEL. START +6D100 AND +6D200 POWER SUPPLIES. ACTIVATE POWER ON SWITCH AND VERIFY NETWORKS PANEL +6D110 AND +6D210. READ +28 VDC (+2.0) ADJUST VOLTAGE. -0.0

5.9 POWER INSTRUMENT UNIT UNTIL "GROUND POWER" INDICATION IS RECEIVED (VERIFY GSCU ON).

5.10 REQUEST MLF COMPUTER ENGINEERING TO VERIFY THAT COMPUTER PERIPHERAL EQUIPMENT (LVDA INTERFACE) IS READY TO SUPPORT TEST.

5.11 REQUEST S-IVB TO VERIFY THAT "+4D411 POWER ON" IS RECEIVED.

5.12 REQUEST THAT S-IVB POWER UP STAGE HYDRAULICS TO SUPPORT A_0 AND A_1 GAIN TEST.

REVISIONS			
SYM	DESCRIPTION	DATE	APPROVAL

5.13 REQUEST THAT S-II POWER IS APPLIED UNTIL "READY FOR POWER TRANSFER" IS RECEIVED.

5.14 REQUEST S-II TO VERIFY THAT THE "400 CPS ACT. SUB. PWR. ON" SWITCH (S2) ON THE "POWER SWITCHING PANEL" 601-214A3 IS IN THE ON POSITION.

5.15 REQUEST S-II TO VERIFY THAT THE "ACCUMULATOR CONTROL UNLOCK" SWITCH (S21) ON THE "S-II HYDRAULICS PANEL" 601-206A12 IS IN THE UNLOCK POSITION.

5.16 VERIFY THAT ON THE "S-II ACTUATOR SUBSTITUTE PANEL" 34A2 THE "POWER ON" (S1), "S-IC/S-II ENGINE NO. 1" (S2), "S-IC/S-II ENGINE NO. 2" (S3), "S-IC/S-II ENGINE NO. 3" (S4), AND "S-IC/S-II ENGINE NO. 4 (S5) SWITCHES ARE IN THE ON POSITION.

5.17 REQUEST THAT S-IC IS POWERED UNTIL "READY FOR POWER TRANSFER" IS RECEIVED.

5.18 REQUEST S-IC TO VERIFY THAT THE "400 CPS ACT. SUB. PWR. ON" SWITCH (S2) ON THE "POWER SWITCHING PANEL" 601-114A3 IS IN THE ON POSITION.

5.19 REQUEST S-IC TO VERIFY THAT THE "S-IC 400 CPS POWER ON" SWITCH (S10) ON THE "POWER SWITCHING PANEL" 601-114A6 IS IN THE ON POSITION.

5.20 REQUEST S-IC TO VERIFY THAT THE "400 CPS POWER ON COMMAND" SWITCH (S12) ON THE "S-IC MEASURING AND R.F. PANEL" 601-111A1 IS IN THE ON POSITION.

5.21 VERIFY THAT ON THE S-IC ACTUATOR SUBSTITUTE PANEL" 5A2 THE "POWER ON" (S1), "S-IC/S-II ENGINE NO. 1" (S2), "S-IC/S-II ENGINE NO. 2 (S3), S-IC/S-II ENGINE NO. 3 (S4), AND S-IC/S-II ENGINE NO. 4 (S5) SWITCHES ARE IN THE ON POSITION.

5.22 VERIFY THAT ALL FLIGHT CONTROL SYSTEM SWITCHES ARE IN THE AUTO POSITION.

5.23 VERIFY THAT THE "APS CONTROL POWER ON" INDICATION ON THE S-IVB ENGINE DEFLECTION PANEL 601-607A5 IS OFF.

5.24 PLACE POWER ON SWITCH (S1) AT GCP 601-608A13 TO AUTO POSITION.

REVISIONS			
SYM	DESCRIPTION	DATE	APPROVAL

5.25 AT SANDERS DISPLAY CONSOLE NO. 4 KEY 7 ENTER FT04. POWER ON-OFF AND/OR REDUNDANCY PROGRAM, IN ACCORDANCE WITH THE IBM OPERATOR REFERENCE MANUAL. SELECT THE POWER ON OPTION.

5.26 AT SANDERS DISPLAY CONSOLE NO. 4 KEY 4 ENTER THE GAIN TEST PROGRAM (CTC1) IN ACCORDANCE WITH THE IBM OPERATOR REFERENCE MANUAL. TAKE THE NORM OPTION TO CALCULATE A_0 AND A_1 GAINS FOR ALL STAGES. THE NOMINAL GAIN VALUES SHOWN ARE GIVEN FOR FLIGHT QUALIFIED EQUIPMENT.

5.27 A_o GAIN VALUES

A. S-IC - PITCH - ACTUATOR CONNECTED

	A_o AVERAGE	A_o NOMINAL GAIN
ENGINE 1 SW. PT. 0	_____	0.90
ENGINE 2 SW. PT. 0	_____	0.90
ENGINE 3 SW. PT. 0	_____	0.90
ENGINE 4 SW. PT. 0	_____	0.90
ENGINE 1 SW. PT. 1	_____	0.45
ENGINE 2 SW. PT. 1	_____	0.45
ENGINE 3 SW. PT. 1	_____	0.45
ENGINE 4 SW. PT. 1	_____	0.45
ENGINE 1 SW. PT. 2	_____	0.32
ENGINE 2 SW. PT. 2	_____	0.32
ENGINE 3 SW. PT. 2	_____	0.32
ENGINE 4 SW. PT. 2	_____	0.32

B. S-IC - YAW - ACTUATOR CONNECTED

ENGINE 1 SW. PT. 0	_____	0.90
ENGINE 2 SW. PT. 0	_____	0.90
ENGINE 3 SW. PT. 0	_____	0.90
ENGINE 4 SW. PT. 0	_____	0.90
ENGINE 1 SW. PT. 1	_____	0.45
ENGINE 2 SW. PT. 1	_____	0.45
ENGINE 3 SW. PT. 1	_____	0.45
ENGINE 4 SW. PT. 1	_____	0.45

REVISIONS			
SYM	DESCRIPTION	DATE	APPROVAL

5.27 (Continued)

ENGINE 1 SW. PT. 2	_____	0.32
ENGINE 2 SW. PT. 2	_____	0.32
ENGINE 3 SW. PT. 2	_____	0.32
ENGINE 4 SW. PT. 2	_____	0.32

C. S-IC - ROLL - ACTUATORS CONNECTED

ENGINE 1 SW. PT. 0	_____	0.245
ENGINE 2 SW. PT. 0	_____	0.245
ENGINE 3 SW. PT. 0	_____	0.245
ENGINE 4 SW. PT. 0	_____	0.245
ENGINE 1 SW. PT. 1	_____	0.245
ENGINE 2 SW. PT. 1	_____	0.245
ENGINE 3 SW. PT. 1	_____	0.245
ENGINE 4 SW. PT. 1	_____	0.245
ENGINE 1 SW. PT. 2	_____	0.245
ENGINE 2 SW. PT. 2	_____	0.245
ENGINE 3 SW. PT. 2	_____	0.245
ENGINE 4 SW. PT. 2	_____	0.245

D. S-II - PITCH - ACTUATORS CONNECTED

ENGINE 1 SW. PT. 2	_____	1.12
ENGINE 2 SW. PT. 2	_____	1.12
ENGINE 3 SW. PT. 2	_____	1.12
ENGINE 4 SW. PT. 2	_____	1.12
ENGINE 1 SW. PT. 3	_____	0.65
ENGINE 2 SW. PT. 3	_____	0.65
ENGINE 3 SW. PT. 3	_____	0.65
ENGINE 4 SW. PT. 3	_____	0.65
ENGINE 1 SW. PT. 4	_____	0.44
ENGINE 2 SW. PT. 4	_____	0.44
ENGINE 3 SW. PT. 4	_____	0.44
ENGINE 4 SW. PT. 4	_____	0.44

E. S-II - YAW - ACTUATORS CONNECTED

ENGINE 1 SW. PT. 2	_____	1.12
ENGINE 2 SW. PT. 2	_____	1.12
ENGINE 3 SW. PT. 2	_____	1.12
ENGINE 4 SW. PT. 2	_____	1.12

REVISIONS			
SYM	DESCRIPTION	DATE	APPROVAL

5.27 (Continued)

ENGINE 1 SW. PT. 3	____	0.65
ENGINE 2 SW. PT. 3	____	0.65
ENGINE 3 SW. PT. 3	____	0.65
ENGINE 4 SW. PT. 3	____	0.65
ENGINE 1 SW. PT. 4	____	0.44
ENGINE 2 SW. PT. 4	____	0.44
ENGINE 3 SW. PT. 4	____	0.44
ENGINE 4 SW. PT. 4	____	0.44

F. S-II - ROLL - ACTUATORS CONNECTED

ENGINE 1 SW. PT. 2	____	0.25
ENGINE 2 SW. PT. 2	____	0.25
ENGINE 3 SW. PT. 2	____	0.25
ENGINE 4 SW. PT. 2	____	0.25
ENGINE 1 SW. PT. 3	____	0.25
ENGINE 2 SW. PT. 3	____	0.25
ENGINE 3 SW. PT. 3	____	0.25
ENGINE 4 SW. PT. 3	____	0.25
ENGINE 1 SW. PT. 4	____	0.25
ENGINE 2 SW. PT. 4	____	0.25
ENGINE 3 SW. PT. 4	____	0.25
ENGINE 4 SW. PT. 4	____	0.25

G. S-IVB - PITCH - ACTUATORS CONNECTED

ENGINE 1 SW. PT. 4	____	0.843

H. S-IVB - YAW - ACTUATORS CONNECTED

ENGINE 1 SW. PT. 4	____	1.120

REVISIONS			
SYM	DESCRIPTION	DATE	APPROVAL

5.28 A_1 GAIN VALUES

	A_1 AVERAGE GAIN	A_1 NOMINAL GAIN
A. S-IC - PITCH - ACTUATOR CONNECTED		
ENGINE 1 SW. PT. 0	_____	0.69
ENGINE 2 SW. PT. 0	_____	0.69
ENGINE 3 SW. PT. 0	_____	0.69
ENGINE 4 SW. PT. 0	_____	0.69
ENGINE 1 SW. PT. 1	_____	0.44
ENGINE 2 SW. PT. 1	_____	0.44
ENGINE 3 SW. PT. 1	_____	0.44
ENGINE 4 SW. PT. 1	_____	0.44
ENGINE 1 SW. PT. 2	_____	0.30
ENGINE 2 SW. PT. 2	_____	0.30
ENGINE 3 SW. PT. 2	_____	0.30
ENGINE 4 SW. PT. 2	_____	0.30
B. S-IC - YAW - ACTUATORS CONNECTED		
ENGINE 1 SW. PT. 0	_____	0.69
ENGINE 2 SW. PT. 0	_____	0.69
ENGINE 3 SW. PT. 0	_____	0.69
ENGINE 4 SW. PT. 0	_____	0.69
ENGINE 1 SW. PT. 1	_____	0.44
ENGINE 2 SW. PT. 1	_____	0.44
ENGINE 3 SW. PT. 1	_____	0.44
ENGINE 4 SW. PT. 1	_____	0.44
ENGINE 1 SW. PT. 2	_____	0.30
ENGINE 2 SW. PT. 2	_____	0.30
ENGINE 3 SW. PT. 2	_____	0.30
ENGINE 4 SW. PT. 2	_____	0.30
C. S-IC - ROLL - ACTUATORS CONNECTED		
ENGINE 1 SW. PT. 0	_____	0.15
ENGINE 2 SW. PT. 0	_____	0.15
ENGINE 3 SW. PT. 0	_____	0.15
ENGINE 4 SW. PT. 0	_____	0.15

REVISIONS			
SYM	DESCRIPTION	DATE	APPROVAL

5.28 (Continued)

ENGINE 1 SW. PT. 1	____	0.15
ENGINE 2 SW. PT. 1	____	0.15
ENGINE 3 SW. PT. 1	____	0.15
ENGINE 4 SW. PT. 1	____	0.15
ENGINE 1 SW. PT. 2	____	0.15
ENGINE 2 SW. PT. 2	____	0.15
ENGINE 3 SW. PT. 2	____	0.15
ENGINE 4 SW. PT. 2	____	0.15

D. S-II - PITCH - ACTUATORS CONNECTED

ENGINE 1 SW. PT. 2	____	1.89
ENGINE 2 SW. PT. 2	____	1.89
ENGINE 3 SW. PT. 2	____	1.89
ENGINE 4 SW. PT. 2	____	1.89
ENGINE 1 SW. PT. 3	____	1.10
ENGINE 2 SW. PT. 3	____	1.10
ENGINE 3 SW. PT. 3	____	1.10
ENGINE 4 SW. PT. 3	____	1.10
ENGINE 1 SW. PT. 4	____	0.74
ENGINE 2 SW. PT. 4	____	0.74
ENGINE 3 SW. PT. 4	____	0.74
ENGINE 4 SW. PT. 4	____	0.74

E. S-II - YAW - ACTUATORS CONNECTED

ENGINE 1 SW. PT. 2	____	1.89
ENGINE 2 SW. PT. 2	____	1.89
ENGINE 3 SW. PT. 2	____	1.89
ENGINE 4 SW. PT. 2	____	1.89
ENGINE 1 SW. PT. 3	____	1.10
ENGINE 2 SW. PT. 3	____	1.10
ENGINE 3 SW. PT. 3	____	1.10
ENGINE 4 SW. PT. 3	____	1.10
ENGINE 1 SW. PT. 4	____	0.74
ENGINE 2 SW. PT. 4	____	0.74
ENGINE 3 SW. PT. 4	____	0.74
ENGINE 4 SW. PT. 4	____	0.74

REVISIONS			
SYM	DESCRIPTION	DATE	APPROVAL

5.28 (Continued)

F. S-II - ROLL - ACTUATORS CONNECTED

ENGINE 1 SW. PT. 2	_____	0.20
ENGINE 2 SW. PT. 2	_____	0.20
ENGINE 3 SW. PT. 2	_____	0.20
ENGINE 4 SW. PT. 2	_____	0.20
ENGINE 1 SW. PT. 3	_____	0.20
ENGINE 2 SW. PT. 3	_____	0.20
ENGINE 3 SW. PT. 3	_____	0.20
ENGINE 4 SW. PT. 3	_____	0.20
ENGINE 1 SW. PT. 4	_____	0.20
ENGINE 2 SW. PT. 4	_____	0.20
ENGINE 3 SW. PT. 4	_____	0.20
ENGINE 4 SW. PT. 4	_____	0.20

G. S-IVB - PITCH - ACTUATORS CONNECTED

ENGINE 1 SW. PT. 4	_____	0.97

H. S-IVB - YAW - ACTUATORS CONNECTED

ENGINE 1 SW. PT. 4	_____	0.97

MSFC FORM 422 (VERTICAL) (AUGUST 1960)

NOTICE — When Government drawings, specifications, or other data are used for any purpose other than in connection with a definitely related Government procurement operation, the United States Government thereby incurs no responsibility nor obligation whatsoever; and the fact that the Government may have formulated, furnished, or in any way supplied the said drawings specifications or other data is not to be regarded by implication or otherwise as in any manner licensing the holder or any other person or corporation, or conveying any rights or permission to manufacture, use, or sell any patented invention that may in any way be related thereto.

APPLICATION		PART No.	M F	REVISIONS			
NEXT ASSY	USED ON			SYM	DESCRIPTION	DATE	APPROVAL

AS-503

VERIFICATION PROCEDURE

RELAY REDUNDANCY (CTC2)

73V1706

UNLESS OTHERWISE SPECIFIED DIMENSIONS ARE IN INCHES TOLERANCES ON: FRACTIONS DECIMALS ANGLES	ORIGINAL DATE OF DRAWING 7/19/68 DRAFTSMAN / CHECKER TRACER / CHECKER ENGINEER / ENGINEER	RELAY REDUNDANCY (CTC2) AS-503	GEORGE C. MARSHALL SPACE FLIGHT CENTER NATIONAL AERONAUTICS AND SPACE ADMINISTRATION HUNTSVILLE, ALABAMA
MATERIAL	SUBMITTED W.L. Grayson W. L. Grayson		
HEAT TREATMENT			
FINAL PROTECTIVE FINISH	APPROVED R. A. Drakey R. A. Drakey	SCALE UNIT WT	DWG SIZE A 73V1706 SHEET 1 OF 3

REVISIONS			
SYM	DESCRIPTION	DATE	APPROVAL

1.0 SCOPE

THIS PROCEDURE WILL VERIFY THE CONTROL COMPUTER "RELAY REDUNDANCY PROGRAM (CTC2)".

2.0 APPLICABLE GOVERNMENT FURNISHED DOCUMENTS

DRAWINGS:

AESS LVDA INTERFACE	50M36401
AESS IU ESE SATURN V	40M14490
INSTRUMENT UNIT ELECTRICAL SCHEMATICS	40M33221

DOCUMENTS:

IP&C S-IU-503	6009047
PRELAUNCH CHECKOUT SPECIFICATIONS AND CRITERIA FOR S-IU-5C3	66-257-0004
USER INSTRUCTION FOR THE OPERATING SYSTEM FOR THE SATURN V LAUNCH COMPUTER COMPLEX AS-5C3	67-F11-0005
TEST PROGRAM SPECIFICATIONS SATURN V LAUNCH COMPUTER COMPLEX AS-503	67-F11-0008

3.0 GENERAL NOTES

CTC2 WILL BE ENTERED FROM THE KEYBOARD IN ACCORDANCE WITH IBM USER'S MANUAL. ALL PROGRAM OPTIONS WILL BE EXERCISED AND HARDWARE RESPONSE TO COMPUTER STIMULI WILL BE MONITORED.

4.0 PREREQUISITES

NONE

5.0 PROCEDURE

5.1 VERIFY THAT THE INSTRUMENT UNIT IS POWERED DOWN.

5.2 VERIFY LVDC (603A28) AND LVDA (603A29) STAGE INTERCONNECTING CABLES ARE INSTALLED ACCORDING TO SHEET 5 OF 40M33220.

REVISIONS			
SYM	DESCRIPTION	DATE	APPROVAL

5.3 PLACE POWER SWITCH (S1) ON GCP 601-608A13 IN THE "OFF" POSITION.

5.4 NOTIFY POWER ROOM TO PLACE +6D100 AND +6D200 BACK-UP BATTERIES IN THE LOAD CONDITION.

5.5 START +6D100 AND +6D200 POWER SUPPLIES.

5.6 ACTIVATE POWER-ON SWITCHES ON +6D100 AND +6D200 POWER SUPPLIES. NOTE VOLTAGE INDICATIONS FOR +6D110 AND +6D210 ON NETWORKS PANEL 601-605A1.

5.7 ACTIVATE BATTERY ENABLE SWITCHES ON +6D100 AND +6D200 POWER SUPPLY PANEL. DEPRESS STOP BUTTONS SIMULTANEOUSLY AND VERIFY BATTERY POWER IS ACTIVATED. VERIFY LIMITS OF +6D110 AND +6D210 ARE 28 VDC (+2.0). DO NOT PROCEED IF LIMITS ARE NOT AS DESCRIBED ABOVE.

5.8 RESET BATTERIES ON 6D100 AND 6D200 POWER SUPPLY PANEL. START +6D100 AND +6D200 POWER SUPPLIES. ACTIVATE POWER ON SWITCH AND VERIFY NETWORKS PANEL +6D110 AND +6D210. READ +28 VDC (+2.0) ADJUST VOLTAGE. -0.0

5.9 POWER INSTRUMENT UNIT UNTIL "GROUND POWER" INDICATION IS RECEIVED (VERIFY GSCU ON).

5.10 REQUEST MLF COMPUTER ENGINEERING TO VERIFY THAT COMPUTER PERIPHERAL EQUIPMENT (LVDA INTERFACE) IS READY TO SUPPORT TEST.

5.11 REQUEST S-IVB TO VERIFY THAT "+4D411 POWER ON" IS RECEIVED.

5.12 VERIFY THAT ALL FLIGHT CONTROL SYSTEM SWITCHES ARE IN THE AUTO POSITION.

5.13 VERIFY THAT S-IC, S-II, and S-IVB HYDRAULIC PUMPS ARE OFF.

5.14 VERIFY THAT "APS CONTROL POWER ON" INDICATION ON THE S-IVB ENGINE DEFLECTION PANEL 601-607A5 IS OFF.

5.15 PLACE THE POWER ON SWITCH ON THE GUIDANCE COMPUTER PANEL TO THE AUTO POSITION.

5.16 AT SANDERS DISPLAY CONSOLE NO. 2, KEY 4, ENTER CTC2, RELAY REDUNDANCY TEST, IN ACCORDANCE WITH THE IBM OPERATOR REFERENCE MANUAL. SELECT THE NORM OPTION TO EXERCISE ALL HARDWARE RESPONSES.

NOTE: THE EXPECTED PROGRAM RESPONSES ARE GIVEN IN THE IBM TEST PROGRAM SPECIFICATIONS SATURN V LCC, SECTION 4, PAGE 8-4.

NOTICE — When Government drawings, specifications, or other data are used for any purpose other than in connection with a definitely related Government procurement operation, the United States Government thereby incurs no responsibility nor obligation whatsoever; and the fact that the Government may have formulated, furnished, or in any way supplied the said drawings specifications or other data is not to be regarded by implication or otherwise as in any manner licensing the holder or any other person or corporation, or conveying any rights or permission to manufacture, use, or sell any patented invention that may in any way be related thereto.

APPLICATION		PART No.	M F	REVISIONS			
NEXT ASSY	USED ON			SYM	DESCRIPTION	DATE	APPROVAL

AS-503

VERIFICATION PROGRAM

COMPARATOR TEST (CTC3)

73V1707

UNLESS OTHERWISE SPECIFIED DIMENSIONS ARE IN INCHES TOLERANCES ON: FRACTIONS DECIMALS ANGLES	ORIGINAL DATE OF DRAWING 7/19/68 DRAFTSMAN / CHECKER TRACER / CHECKER ENGINEER / ENGINEER	COMPARATOR TEST PROGRAM (CTC3) AS-503	GEORGE C. MARSHALL SPACE FLIGHT CENTER NATIONAL AERONAUTICS AND SPACE ADMINISTRATION HUNTSVILLE, ALABAMA
MATERIAL	SUBMITTED Don J Ward for E. N. BRYAN		
HEAT TREATMENT			
FINAL PROTECTIVE FINISH	APPROVED R. A. DRAKEY	SCALE UNIT WT	DWG SIZE A 73V1707 SHEET 1 OF 4

REVISIONS			
SYM	DESCRIPTION	DATE	APPROVAL

1.0 SCOPE

THIS PROCEDURE WILL VERIFY THE CONTROL COMPUTER COMPARATOR TEST PROGRAM (CTC3).

2.0 APPLICABLE GOVERNMENT FURNISHED DOCUMENTS

DRAWINGS AESS LVDA INTERFACE	50M36401
AESS INSTRUMENT UNIT ESE SATURN V	40M14490
INSTRUMENT UNIT ELECTRICAL SCHEMATICS	40M33221
DOCUMENTS IP & C S-IU-503	6009048
TEST PROGRAM SPECIFICATIONS SATURN V LAUNCH COMPUTER COMPLES AS-503	67-F11-0008
PRELAUNCH CHECKOUT SPECIFICATIONS AND CRITERIA FOR S-IU-503	68-257-0004
OPERATOR REFERENCE MANUAL FOR SLCC PROGRAMMING SYSTEM	68-F11-0003

3.0 GENERAL NOTES

CTC3 WILL BE ENTERED FROM KEYBOARD IN ACCORDANCE WITH THE IBM OPERATOR REFERENCE MANUAL. ALL PROGRAM OPTIONS WILL BE EXERCISED AND HARDWARE RESPONSE TO COMPUTER STIMULI WILL BE MONITORED.

4.0 PREREQUISITES

NONE

5.0 PROCEDURE

5.1 VERIFY THAT THE INSTRUMENT UNIT IS POWERED DOWN.

5.2 VERIFY LVDC (603A28) AND LVDA (603A29) STAGE INTERCONNECTING CABLES ARE INSTALLED ACCORDING TO SHEET 5 OF 40M33220.

5.3 PLACE POWER SWITCH (S1) ON GCP 601-608A13 IN THE "OFF" POSITION.

5.4 NOTIFY POWER ROOM TO PLACE +6D100 AND +6D200 BACK UP BATTERIES IN THE LOAD CONDITION.

REVISIONS			
SYM	DESCRIPTION	DATE	APPROVAL

5.5 START +6D100 AND +6D200 POWER SUPPLIES.

5.6 ACTIVATE POWER ON SWITCHES ON +6D100 AND +6D200 POWER SUPPLIES. NOTE VOLTAGE INDICATIONS FOR +6D110 AND +6D210 ON NETWORKS PANEL 601-605A1.

5.7 ACTIVATE BATTERY ENABLE SWITCHES ON +6D100 AND +6D200 POWER SUPPLY PANEL. DEPRESS STOP BUTTONS SIMULTANEOUSLY AND VERIFY BATTERY POWER IS ACTIVATED. VERIFY LIMITS OF +6D110 AND +6D210 ARE 28 VDC (+2.0). DO NOT PROCEED IF LIMITS ARE NOT AS DESCRIBED ABOVE.

5.8 RESET BATTERIES ON 6D100 AND 6D200 POWER SUPPLY PANEL. START +6D100 AND +6D200 POWER SUPPLIES. ACTIVATE POWER ON SWITCH AND VERIFY NETWORKS PANEL +6D110 AND +6D210. READ +28 VDC (+2.0) -0.0 ADJUST VOLTAGE.

5.9 POWER INSTRUMENT UNIT UNTIL "GROUND POWER" INDICATION IS RECEIVED (VERIFY GSCU ON).

5.10 REQUEST MLF COMPUTER ENGINEERING TO VERIFY THAT COMPUTER PERIPHERAL EQUIPMENT (LVDA INTERFACE) IS READY TO SUPPORT TEST.

5.11 REQUEST S-IVB TO VERIFY THAT "+4D411 POWER ON" IS RECEIVED.

5.12 REQUEST THAT S-IVB POWER UP STAGE HYDRAULICS TO SUPPORT FLIGHT CONTROL TESTS.

5.13 REQUEST THAT S-II POWERED UNTIL "READY FOR POWER TRANSFER" IS RECEIVED.

5.14 REQUEST S-II TO VERIFY THAT THE "400 CPS ACT. SUB. PWR. ON" SWITCH (S2) ON THE "POWER SWITCH PANEL" 601-214A3 IS IN THE ON POSITION.

5.15 VERIFY THAT ON THE "S-II ACTUATOR SUBSTITUE PANEL" 34A2 THE "POWER ON" (S1), "S-IC/S-II ENGINE NO. 1" (S2), "S-IC/S-II ENGINE NO. 2" (S3), "S-IC/S-II ENGINE NO. 3" (S4), AND "S-IC/S-II ENGINE NO. 4 (S5) SWITCHES ARE IN THE ON POSITION.

5.16 REQUEST THAT S-IC IS POWERED UNTIL "READY FOR POWER TRANSFER" IS RECEIVED.

REVISIONS			
SYM	DESCRIPTION	DATE	APPROVAL

5.17 AT SANDERS DISPLAY CONSOLE #2 CARD KEY #7 REQUEST AND EXECUTE FT04 OPTION 1 TO POWER UP LVDC.

5.18 REQUEST S-IC TO VERIFY THAT THE "S-IC 400 CPS POWER ON" SWITCH (S10) ON THE "POWER SWITCH PANEL" 601-114A6 IS IN THE ON POSITION.

5.19 REQUEST S-IC TO VERIFY THAT THE "400C POWER ON COMMAND" SWITCH (S12) ON THE "S-IC MEASURING AND RF PANEL" 601-111A1 IS IN THE ON POSITION.

5.20 VERIFY THAT ON THE "S-IC ACTUATOR SUBSTITUTE PANEL" 5A2 THE "POWER ON" (S1), "S-IC/S-II ENGINE NO. 1" (S2), "S-IC/S-II ENGINE NO. 2 (S3), S-IC/S-II ENGINE NO. #(S4), AND S-IC/S-II ENGINE NO. 4 (S5) SWITCHES ARE IN THE ON POSITION.

5.21 VERIFY THAT THE "APS CONTROL POWER" INDICATION ON THE S-IVB ENGINE DEFLECTION PANEL, 601607A5, IS OFF.

5.22 VERIFY THAT ALL FLIGHT CONTROL AND EDS/CRG SYSTEM SWITCHES ARE IN THE AUTO POSITION.

5.23 AT SANDERS DISPLAY CONSOLE NO. 4, KEY 4 ENTER CTC3, THE CONTROL COMPUTER COMPARATOR TEST PROGRAM, IN ACCORDANCE WITH THE IBM OPERATOR REFERENCE MANUAL. ENTER THE NORM OPTION TO TAKE ALL PROGRAM OPTIONS MEASURING PICK POINTS FOR S-IVB BURN AND SPATIAL COMPARATORS.

MSFC FORM 422 (VERTICAL) (AUGUST 1960)

NOTICE — When Government drawings, specifications, or other data are used for any purpose other than in connection with a definitely related Government procurement operation, the United States Government thereby incurs no responsibility nor obligation whatsoever; and the fact that the Government may have formulated, furnished, or in any way supplied the said drawings specifications or other data is not to be regarded by implication or otherwise as in any manner licensing the holder or any other person or corporation, or conveying any rights or permission to manufacture, use, or sell any patented invention that may in any way be related thereto.

APPLICATION		PART No.	M F	REVISIONS			
NEXT ASSY	USED ON			SYM	DESCRIPTION	DATE	APPROVAL

AS-503

VERIFICATION PROCEDURE

APS GAIN TEST (CTC5)

73V1708

UNLESS OTHERWISE SPECIFIED DIMENSIONS ARE IN INCHES TOLERANCES ON: FRACTIONS DECIMALS ANGLES	ORIGINAL DATE OF DRAWING 7/19/68 DRAFTSMAN / CHECKER TRACER / CHECKER ENGINEER / ENGINEER	APS GAIN TEST (CTC5) AS-503	GEORGE C. MARSHALL SPACE FLIGHT CENTER NATIONAL AERONAUTICS AND SPACE ADMINISTRATION HUNTSVILLE, ALABAMA
MATERIAL	SUBMITTED E. N. Bryan E. N. BRYAN		
HEAT TREATMENT			
FINAL PROTECTIVE FINISH	APPROVED R. A. Drakey R. A. DRAKEY	SCALE UNIT WT	DWG SIZE A 73V1708 SHEET 1 OF 4

REVISIONS			
SYM	DESCRIPTION	DATE	APPROVAL

1.0 SCOPE

THIS PROCEDURE WILL VERIFY THE "APS GAIN PROGRAM (CTC5)".

2.0 APPLICABLE GOVERNMENT FURNISHED DOCUMENTS

DRAWINGS	
AESS LVDA INTERFACE	50M36401
AESS INSTRUMENT UNIT ESE SATURN V	40M14490
INSTRUMENT UNIT ELECTRICAL SCHEMATICS	40M33221
DOCUMENTS	
IP & C S-IU-503	6009048
TEST PROGRAM SPECIFICATIONS SATURN V LAUNCH COMPUTER COMPLEX AS-503	67-F11-0008
PRELAUNCH CHECKOUT SPECIFICATIONS AND CRITERIA FOR S-IU-503	68-257-0004
OPERATOR REFERENCE MANUAL FOR SLCC PROGRAMMING SYSTEM	68-F11-0003

3.0 GENERAL NOTES

CTC5 WILL BE ENTERED FROM KEYBOARD IN ACCORDANCE WITH THE IBM OPERATOR REFERENCE MANUAL. ALL PROGRAM OPTIONS WILL BE EXERCISED AND HARDWARE RESPONSE TO COMPUTER STIMULI WILL BE MONITORED.

4.0 PREREQUISITES

NONE

5.0 PROCEDURE

5.1 VERIFY THAT THE INSTRUMENT UNIT IS POWERED DOWN.

5.2 VERIFY LVDC (603A28) AND LVDA (603A29) STAGE INTERCONNECTING CABLES ARE INSTALLED ACCORDING TO SHEET 5 OF 40M33220.

REVISIONS			
SYM	DESCRIPTION	DATE	APPROVAL

5.3 PLACE POWER SWITCH (S1) ON GCP 601-608A13 IN THE "OFF" POSITION.

5.4 NOTIFY POWER ROOM TO PLACE +6D100 AND +6D200 BACKUP BATTERIES IN THE LOAD CONDITION.

5.5 START +6D100 AND +6D200 POWER SUPPLIES.

5.6 ACTIVIATE"POWER ON" SWITCHES ON +6D100 AND +6D200 POWER SUPPLIES. NOTE VOLTAGE INDICATIONS FOR +6D110 AND +6D210 ON NETWORKS PANEL 601-605A1.

5.7 ACTIVATE BATTERY ENABLE SWITCHES ON +6D100 AND +6D200 POWER SUPPLY PANEL. DEPRESS STOP BUTTONS SIMULTANEOUSLY AND VERIFY BATTERY POWER IS ACTIVATED. VERIFY LIMITS OF +6D110 AND +6D210 ARE 28 VDC (+2.0). DO NOT PROCEED IF LIMITS ARE NOT AS DESCRIBED ABOVE.

5.8 RESET BATTERIES ON 6D100 AND 6D200 POWER SUPPLY PANEL. START +6D100 AND +6D200 POWER SUPPLIES. ACTIVATE POWER ON SWITCH AND VERIFY NETWORKS PANEL +6D110 AND +6D210. READ +28 VDC (+2.0) ADJUST VOLTAGE. -0.0

5.9 POWER INSTRUMENT UNIT UNTIL "GROUND POWER" INDICATION IS RECEIVED (VERIFY GSCU ON).

5.10 REQUEST MLF COMPUTER ENGINEERING TO VERIFY THAT COMPUTER PERIPHERAL EQUIPMENT (LVDA INTERFACE) IS READY TO SUPPORT TEST.

5.11 REQUEST S-IVB TO VERIFY THAT "+4D411 POWER ON" IS RECEIVED.

5.12 REQUEST THAT S-IVB POWER UP STAGE HYDRAULICS TO SUPPORT FLIGHT CONTROL TESTS.

5.13 REQUEST THAT S-II IS POWERED UNTIL "READY FOR POWER TRANSFER" IS RECEIVED.

5.14 REQUEST S-II TO VERIFY THAT THE "400 CPS ACT. SUB. PWR. ON" SWITCH (S2) ON THE "POWER SWITCH PANEL" 601-214A3 IS IN THE ON POSITION.

5.15 VERIFY THAT ON THE "S-II ACTUATOR SUBSTITUTE PANEL" 34A3 THE "POWER ON" (S1), "S-IC/S-II ENGINE NO. 1" (S2), "S-IC/S-II ENGINE NO. 2" (S3), "S-IC/S-II ENGINE NO. 3" (S4), AND "S-IC/S-II ENGINE NO. 4 (S5) SWITCHES ARE IN THE ON POSTION.

5.16 REQUEST THAT S-IC IS POWERED UNTIL "READY FOR POWER TRANSFER IS RECEIVED.

5.17 REQUEST S-IC TO VERIFY THAT THE "400 CPS ACT. SUB PWR. ON" SWITCH (S2) ON THE "POWER SWITCH PANEL" 601-114A3 IS IN THE ON POSITION.

REVISIONS			
SYM	DESCRIPTION	DATE	APPROVAL

5.18 REQUEST S-IC TO VERIFY THAT THE "S-IC 400 CPS POWER ON" SWITCH (S10) ON THE "POWER SWITCH PANEL" 601-114A3 IS IN THE ON POSITION.

5.19 REQUEST S-IC TO VERIFY THAT THE "400C POWER ON COMMAND" SWITCH (S12) ON THE "S-IC MEASURING AND RF PANEL" 601-111A1 IS IN THE ON POSITION.

5.20 VERIFY THAT ON THE "S-IC ACTUATOR SUBSTITUTE PANEL" 5A2 THE "POWER ON" (S1), "S-IC/S-II ENGINE NO. 1" (S2), "S-IC/S-II ENGINE NO. 2 (S3), S-IC/S-II ENGINE NO. 3 (S4), AND S-IC/S-II ENGINE NO. 4 (S5) SWITCHES ARE IN THE ON POSITION.

5.21 VERIFY THAT ALL SWITCHES IN THE FLIGHT CONTROL AND EDS/CRG SYSTEMS ARE IN THE AUTO POSITION.

5.22 VERIFY THAT THE "APS CONTROL POWER" INDICATION ON THE S-IVB ENGINE DEFLECTION PANEL 601-607A5,IS OFF.

5.23 PLACE THE LVDA POWER ON SWITCH ON GCP 601-608A13 TO THE AUTO POSITION.

5.24 AT SANDERS DISPLAY CONSOLE NO. 2, KEY 7 ENTER FT04, LVDC POWER ON AND/OR REDUNDANCY PROGRAM, IN ACCORDANCE WITH THE IBM OPERATOR REFERENCE MANUAL. TAKE THE POWER ON PORTION.

5.25 AT SANDERS DISPLAY CONSOLE NO. 2, KEY 4 ENTER CTC5, APS GAIN TEST, IN ACCORDANCE WITH THE IBM OPERATOR REFERENCE MANUAL. TAKE THE NORM OPTION TO CALCULATE THE GAIN FOR EACH APS MODE OF OPERATION.

MSFC FORM 422 (VERTICAL) (AUGUST 1960)

NOTICE—When Government drawings, specifications, or other data are used for any purpose other than in connection with a definitely related Government procurement operation, the United States Government thereby incurs no responsibility nor obligation whatsoever; and the fact that the Government may have formulated, furnished, or in any way supplied the said drawings specifications or other data is not to be regarded by implication or otherwise as in any manner licensing the holder or any other person or corporation, or conveying any rights or permission to manufacture, use, or sell any patented invention that may in any way be related thereto.

APPLICATION		PART No.	MF	REVISIONS			
NEXT ASSY	USED ON			SYM	DESCRIPTION	DATE	APPROVAL

AS-503

PROGRAM VERIFICATION

EDS CONTROL RATE GYRO TEST (CTC4)

73V1709

UNLESS OTHERWISE SPECIFIED DIMENSIONS ARE IN INCHES TOLERANCES ON: FRACTIONS DECIMALS ANGLES	ORIGINAL DATE OF DRAWING 7/19/68 DRAFTSMAN / CHECKER TRACER / CHECKER ENGINEER / ENGINEER	EDS CONTROL RATE GYRO TEST (CTC4) AS-503	GEORGE C. MARSHALL SPACE FLIGHT CENTER NATIONAL AERONAUTICS AND SPACE ADMINISTRATION HUNTSVILLE, ALABAMA
MATERIAL	SUBMITTED W. L. Grayson W. L. GRAYSON		
HEAT TREATMENT	APPROVED R. A. Drakey 6/4/68 R. A. DRAKEY	SCALE	DWG SIZE A — 73V1709
FINAL PROTECTIVE FINISH		UNIT WT	SHEET 1 OF 3

REVISIONS			
SYM	DESCRIPTION	DATE	APPROVAL

1.0 SCOPE

THIS PROCEDURE WILL VERIFY THE EDS/CRG TEST PROGRAM (CTC4).

2.0 APPLICABLE GOVERNMENT FURNISHED DOCUMENTS

DRAWINGS:

AESS LVDA INTERFACE	50M36401
AESS INSTRUMENT UNIT ESE SATURN V	40M14490
INSTRUMENT UNIT ELECTRICAL SCHEMATICS	40M33221

DOCUMENTS:

IP & C S-IU-503	6009048
TEST PROGRAM SPECIFICATIONS SATURN V LAUNCH COMPUTER COMPLEX AS-503	67-F11-0008
PRELAUNCH CHECKOUT SPECIFICATIONS AND CRITERIA FOR S-IU-503	
OPERATOR REFERENCE MANUAL FOR SLCC PROGRAMMING SYSTEM	68-F11-0003

3.0 GENERAL NOTES

CTC4 will be entered from keyboard in accordance with the IBM manual. All program options will be exercised and hardware response to computer stimuli will be monitored.

4.0 PREREQUISITES

None

REVISIONS			
SYM	DESCRIPTION	DATE	APPROVAL

5.0 PROCEDURE

5.1 VERIFY THAT THE INSTRUMENT UNIT IS POWERED DOWN.

5.2 VERIFY THAT LVDA (603A29) AND LVDC (603A28) STAGE INTERCONNECTING CABLES ARE INSTALLED ACCORDING TO IU CID (40M33080).

5.3 VERIFY THAT POWER SWITCH (S1) ON THE GCP (601-608A13) IS IN THE "OFF" POSITION.

5.4 NOTIFY POWER ROOM TO CLOSE THE IU CIRCUIT BREAKERS.

5.5 START THE +6D100 AND +6D200 POWER SUPPLIES.

5.6 PLACE THE +6D100 AND +6D200 OUTPUT POWER SWITCHES TO THE "ON" POSITION.

5.7 POWER THE INSTRUMENT UNIT UNTIL THE "GROUND POWER" INDICATION IS RECEIVED PER STANDARD OPERATING PROCEDURE.

5.8 VERIFY THAT GSCU IS ON.

5.9 ADJUST +6D100 AND +6D200 REMOTE VOLTAGE METERS TO READ 28V(+2,-0) VIA THE VOLTAGE INCREASE/DECREASE SWITCHES.

5.10 VERIFY ESE/LVDA SWITCH IN ESE POSITION.

5.11 ISSUE A SWITCH SELECTOR REGISTER TEST FOR THE IU AND VERIFY THE REGISTER TEST INDICATION.

5.12 REQUEST MLF COMPUTER ENGINEERING TO VERIFY THAT COMPUTER PERIPHERAL EQUIPMENT IS READY TO SUPPORT.

5.13 REQUEST TEST CONDUCTOR TO VERIFY THAT LCC & MLF DDAS IS IN "RECEIVE".

5.14 REQUEST THAT S-IVB STAGE APPLY POWER UNTIL "READY FOR POWER TRANSFER" INDICATION IS RECEIVED.

5.15 VERIFY THAT ALL EDS/CRG CONTROL SYSTEM SWITCHES ARE IN THE "AUTO" POSITION.

5.16 VERIFY THAT THE FLIGHT CONTROL COMPUTER SYSTEM POWER IS OFF.

5.17 AT SANDERS DISPLAY CONSOLE NO. 4, KEY 4, ENTER THE EDS CONTROL RATE GYRO TEST (CTC4) IN ACCORDANCE WITH THE IBM OPERATOR REFERENCE MANUAL. TAKE THE OPTION ($PALL) TO VERIFY THE ENTIRE PROGRAM.

MSFC FORM 422 (VERTICAL) (AUGUST 1960)

NOTICE — When Government drawings, specifications, or other data are used for any purpose other than in connection with a definitely related Government procurement operation, the United States Government thereby incurs no responsibility nor obligation whatsoever; and the fact that the Government may have formulated, furnished, or in any way supplied the said drawings specifications or other data is not to be regarded by implication or otherwise as in any manner licensing the holder or any other person or corporation, or conveying any rights or permission to manufacture, use, or sell any patented invention that may in any way be related thereto.

APPLICATION		PART No.	M F	REVISIONS			
NEXT ASSY	USED ON			SYM	DESCRIPTION	DATE	APPROVAL

AS-503

PROGRAM VERIFICATION

END TO END POLARITY TEST (CTC6)

73V1710

UNLESS OTHERWISE SPECIFIED DIMENSIONS ARE IN INCHES TOLERANCES ON: FRACTIONS DECIMALS ANGLES	ORIGINAL DATE OF DRAWING 7/19/68 DRAFTSMAN / CHECKER TRACER / CHECKER ENGINEER / ENGINEER	END TO END POLARITY TEST (CTC6) AS-503	GEORGE C. MARSHALL SPACE FLIGHT CENTER NATIONAL AERONAUTICS AND SPACE ADMINISTRATION HUNTSVILLE, ALABAMA
MATERIAL	SUBMITTED W. L. Grayson W. L. GRAYSON		
HEAT TREATMENT			
FINAL PROTECTIVE FINISH	APPROVED R. A. Drakey 4/6/68 R. A. DRAKEY	SCALE UNIT WT	DWG SIZE A 73V1710 SHEET 1 OF 4

REVISIONS			
SYM	DESCRIPTION	DATE	APPROVAL

1.0 SCOPE

THIS PROCEDURE WILL VERIFY THE END TO END POLARITY TEST (CTC6).

2.0 APPLICABLE GOVERNMENT FURNISHED DOCUMENTS

DRAWINGS:

AESS LVDA INTERFACE	50M36401
AESS INSTRUMENT UNIT ESE SATURN V	40M14490
INSTRUMENT UNIT ELECTRICAL SCHEMATICS	40M33221

DOCUMENTS:

IP & C S-IU-503	6009048
TEST PROGRAM SPECIFICATIONS SATURN V LAUNCH COMPUTER COMPLEX AS-503	67-F11-0008
PRELAUNCH CHECKOUT SPECIFICATIONS AND CRITERIA FOR S-IU-503	
OPERATOR REFERENCE MANUAL FOR SLCC PROGRAMMING SYSTEM	68-F11-0003

3.0 GENERAL NOTES

CTC6 WILL BE ENTERED FROM KEYBOARD IN ACCORDANCE WITH THE IBM MANUAL. ALL PROGRAM OPTIONS WILL BE EXERCISED AND HARDWARE RESPONSE TO COMPUTER STIMULI WILL BE MONITORED.

4.0 PREREQUISITES

None

REVISIONS			
SYM	DESCRIPTION	DATE	APPROVAL

END TO END POLARITY TEST PROGRAM (CTC6)

5.0 PROCEDURE

5.1 VERIFY THAT THE INSTRUMENT UNIT IS POWERED DOWN.

5.2 VERIFY THAT LVDA (603A29) AND LVDC (603A28) STAGE INTERCONNECTING CABLES ARE INSTALLED ACCORDING TO IU CID (40M33080).

5.3 VERIFY THAT POWER SWITCH (S1) ON THE GCP (601-608A13) IS IN THE "OFF" POSITION.

5.4 NOTIFY POWER ROOM TO CLOSE THE IU CIRCUIT BREAKERS AND PLACE THE +6D100 AND +6D200 BACKUP BATTERIES ON LINE.

5.5 START THE +6D100 AND +6D200 POWER SUPPLIES.

5.6 PLACE THE +6D100 AND +6D200 OUTPUT POWER SWITCHES TO THE "ON" POSITION.

5.7 PLACE THE +6D100 and +6D200 BACKUP BATTERY ENABLE SWITCHES TO THE "ON" POSITION AND VERIFY BACKUP BATTERY ENABLED INDICATIONS ON EVENTS DISPLAY PANEL.

5.8 POWER THE INSTRUMENT UNIT UNTIL THE "GROUND POWER" INDICATION IS RECEIVED PER STANDARD OPERATING PROCEDURE.

5.9 VERIFY THAT GSCU IS ON.

5.10 ADJUST +6D100 AND +6D200 REMOTE VOLTAGE METERS TO READ 28V(+2,-0) VIA THE VOLTAGE INCREASE/DECREASE SWITCHES.

5.11 VERIFY ESE/LVDA SWITCH IN ESE POSITION.

5.12 ISSUE A SWITCH SELECTOR REGISTER TEST FOR THE IU AND VERIFY THE REGISTER TEST INDICATION.

5.13 REQUEST MLF COMPUTER ENGINEERING TO VERIFY THAT COMPUTER PERIPHERAL EQUIPMENT IS READY TO SUPPORT.

5.14 REQUEST TEST CONDUCTOR TO VERIFY THAT LCC & MLF DDAS IS IN "RECEIVE".

5.15 REQUEST THAT S-IVB STAGE APPLY POWER UNTIL "READY FOR POWER TRANSFER" INDICATION IS RECEIVED.

5.16 REQUEST THAT S-IVB POWER UP STAGE HYDRAULICS TO SUPPORT FLIGHT CONTROL TESTS.

5.17 REQUEST THST S-II POWER IS APPLIED UNTIL "READY FOR POWER TRANSFER" IS RECEIVED.

5.18 REQUEST S-II TO VERIFY THAT THE "400 CPS ACT. SUB. PWR. ON" SWITCH (S2) ON THE "POWER SWITCHING PANEL" 601-214A3 IS IN THE ON POSITION.

REVISIONS			
SYM	DESCRIPTION	DATE	APPROVAL

5.19 REQUEST S-II TO VERIFY THAT THE "ACCUMULATOR CONTROL UNLOCK" SWITCH (S21) ON THE "S-II HYDRAULICS PANEL" 601-206A12 IS IN THE UNLOCK POSITION.

5.20 VERIFY THAT ON THE "S-II ACTUATOR SUBSTITUTE PANEL" 34A2 THE "POWER ON" (S1), "S-IC/S-II ENGINE NO. 1" (S2), "S-IC/S-II ENGINE NO. 2" (S3), "S-IC/S-II ENGINE NO. 3" (S4), AND "S-IC/S-II ENGINE NO. 4 (S5) SWITCHES ARE IN THE ON POSITION.

5.21 REQUEST THAT S-IC IS POWERED UNTIL "READY FOR POWER TRANSFER" IS RECEIVED.

5.22 REQUEST S-IC TO VERIFY THAT THE "400 CPS ACT. SUB. PWR. ON" SWITCH (S2) ON THE "POWER SWITCHING PANEL" 601-114A3 IS IN THE ON POSITION.

5.23 REQUEST S-IC TO VERIFY THAT THE "S-IC 400 CPS POWER ON" SWITCH (S10) ON THE "POWER SWITCHING PANEL" 601-114A6 IS IN THE ON POSITION.

5.24 REQUEST S-IC TO VERIFY THAT THE "400 CPS POWER ON COMMAND" SWITCH (S12) ON THE "S-IC MEASURING AND R.F. PANEL" 601-111A1 IS IN THE ON POSITION.

5.25 VERIFY THAT ON THE S-IC ACTUATOR SUBSTITUTE PANEL" 5A2 THE "POWER ON" (S1), "S-IC/S-II ENGINE NO. 1 " (S2), "S-IC/S-II ENGINE NO. 2 (S3), S-IC/S-II ENGINE NO. 3 (S4), AND S-IC/S-II ENGINE NO. 4 (S5) SWITCHES ARE IN THE ON POSITION.

5.26 VERIFY THAT ALL FLIGHT CONTROL SYSTEM SWITCHES ARE IN THE AUTO POSITION.

5.27 VERIFY THAT THE "APS CONTROL POWER ON" INDICATION ON THE S-IVB ENGINE DEFLECTION PANEL 601-607A5 IS OFF.

5.28 POWER UP THE ST-124M SYSTEM ACCORDING TO IU OPERATING PROCEDURE.

5.29 PLACE POWER ON SWITCH (S1) AT GCP 601-608A13 TO AUTO POSITION.

5.30 AT SANDERS DISPLAY CONSOLE NO. 4, KEY 7, ENTER FT04, POWER ON/OFF AND/OR REDUNDANCY PROGRAM, IN ACCORDANCE WITH THE IBM OPERATOR REFERENCE MANUAL. SELECT THE POWER ON OPTION ($P000000).

5.31 AT SANDERS DISPLAY CONSOLE NO. 4, KEY 4, ENTER THE END TO END POLARITY TEST (CTC6) IN ACCORDANCE WITH THE IBM OPERATOR REFERENCE MANUAL. EXERCISE THE OPTIONS FOR EACH AXIS ON ALL STAGES AND MONITOR THE APPROPRIATE RESPONSE

MSFC FORM 422 (VERTICAL) (AUGUST 1960)

NOTICE — When Government drawings, specifications, or other data are used for any purpose other than in connection with a definitely related Government procurement operation, the United States Government thereby incurs no responsibility nor obligation whatsoever; and the fact that the Government may have formulated, furnished, or in any way supplied the said drawings specifications or other data is not to be regarded by implication or otherwise as in any manner licensing the holder or any other person or corporation, or conveying any rights or permission to manufacture, use, or sell any patented invention that may in any way be related thereto.

APPLICATION		PART No.	M F	REVISIONS			
NEXT ASSY	USED ON			SYM	DESCRIPTION	DATE	APPROVAL

AS-503

VERIFICATION PROCEDURE

S-IC PROPELLANT MONITOR UPDATE TEST PROGRAM (BT01)

S-IC PROPELLANT TEMPERATURE MONITOR PROGRAM (BE01)

S-IC PROPELLANT LEVEL MONITOR PROGRAM (BE02)

73V1801

UNLESS OTHERWISE SPECIFIED DIMENSIONS ARE IN INCHES TOLERANCES ON: FRACTIONS DECIMALS ANGLES	ORIGINAL DATE OF DRAWING 7/23/68 DRAFTSMAN / CHECKER TRACER / CHECKER ENGINEER / ENGINEER	S-IC PROPELLANT MONITOR PROGRAMS (BT01, BE01, AND BE02) AS-503	GEORGE C. MARSHALL SPACE FLIGHT CENTER NATIONAL AERONAUTICS AND SPACE ADMINISTRATION HUNTSVILLE, ALABAMA
MATERIAL	SUBMITTED G. N. COKER		
HEAT TREATMENT			
FINAL PROTECTIVE FINISH	APPROVED M. B. HARRISON	SCALE / UNIT WT	DWG SIZE A
			73V1801 SHEET 1 OF 11

REVISIONS			
SYM	DESCRIPTION	DATE	APPROVAL

1.0 SCOPE

THESE PROGRAMS SHALL MONITOR THE RP1 AND LOX LIQUID LEVELS IN THE S-IC STAGE PROPELLANT TANKS, MONITOR THE S-IC RP1 TEMPERATURE, COMPUTE THE LIQUID LEVEL CORRECTIONS NECESSARY TO OBTAIN OPTIMUM S-IC PROPELLANT MASSES AT LIFT OFF AND DISPLAY PROPELLANT TANKING COMPUTER SYSTEM MASS READOUTS FROM S-IC, S-II AND S-IVB STAGES. BT01 WILL PROCESS INPUT HARDWARE CONSTANTS AND CALIBRATION DATA NOT KNOWN UNTIL LOAD TIME FOR USE BY FUNCTION EXECUTORS BE01 AND BE02. BE01 CONTROLS THE DETERMINATION OF RP1 TEMPERATURE AND THE CALCULATION OF LIFT-OFF RP1 AND LOX FLIGHT MASSES. BE02 CONTROLS THE DETERMINATION OF PROPELLANT LEVELS DURING TANK FILL AND MONITOR PHASES.

2.0 APPLICABLE GOVERNMENT FURNISHED DOCUMENTS

AESS S-IC ESE SATURN V	40M10616
AESS S-IC STAGE SIMULATOR	40M34240
OPERATOR REFERENCE MANUAL FOR SLCC PROGRAMMING SYSTEM SATURN V	IBM NO. 68-F11-0003

3.0 GENERAL NOTES

3.1 PROGRAM BT01 IS USED ONLY WHEN IT IS NECESSARY TO CALCULATE AND LOAD NEW CONSTANTS INTO FUNCTION EXECUTOR ROUTINES BE01 AND BE02. FUNCTION EXECUTOR ROUTINES BE01 AND BE02 CAN BE RUN SIMULTANEOUSLY OR INDEPENDENTLY OF EACH OTHER (AND OF BT01) AT CYCLIC RATES VARIABLE FROM A MINIMUM OF TEN SECONDS TO A MAXIMUM OF TEN MINUTES.

3.2 INITIALIZATION OF BE01 AND BE02 IS A PREREQUISITE TO CALLING UP TEST PROGRAM BT01.

4.0 PREREQUISITES

4.1 THE S-IC STAGE SIMULATOR WILL BE IN THE ELECTRICAL OR MECHANICAL SIMULATE MODE.

4.2 POWER UP THE S-IC STAGE SIMULATOR AND ESE.

4.3 REQUEST S-II TEST OPERATOR TO START POWER SUPPLY +2D100 AND ENERGIZE +2D110 POWER BUS.

4.4 REQUEST POWER ROOM PERSONNEL TO CLOSE CIRCUIT BREAKER FOR +2D110 GETS POWER BUS.

REVISIONS			
SYM	DESCRIPTION	DATE	APPROVAL

4.5 STATION ONE TECHNICIAN AT THE MASS LOADING SIMULATOR PANEL IN THE MLF AND ANOTHER TECHNICIAN AT THE A1 RACK OF THE S-IC STAGE SIMULATOR.

4.6 ON THE MASS LOADING SIMULATOR PANEL IN THE MLF, PLACE THE POWER SWITCH IN THE "ON" POSITION.

4.7 MONITOR COMMUNICATION CHANNEL 1 FOR PROGRAM REQUESTS FROM THE TEST OPERATOR.

5.0 PROCEDURE

5.1 INITIALIZE PROGRAM BE01 BY ENTERING $FUNCBE01/SSSI AT THE DISPLAY CONSOLE WHERE SSS IS THE DESIRED SCAN RATE IN SECONDS BETWEEN 10 SECONDS AND 10 MINUTES.

5.2 INITIALIZE PROGRAM BE02 BY ENTERING $FUNCBE02/SSSI AT THE DISPLAY CONSOLE WHERE SSS IS THE SAME SCAN RATE USED IN STEP 5.1.

5.3 CALL UP TEST PROGRAM BT01 BY ENTERING $TPRQBT01 AT THE DISPLAY CONSOLE.

5.4 EXECUTE TEST PROGRAM BT01 BY ENTERING $PX AT THE DISPLAY CONSOLE.

5.5 REQUEST BT01 INPUT DATA CARDS BE PLACED IN THE LCC COMPUTER CARD READER AS REQUIRED FOR THE PROGRAM.

5.6 REQUEST BT01 LOAD OPTION BY ENTERING $PLOADC AT THE DISPLAY CONSOLE TO TRANSMIT DATA FROM THE CARDS IN STEPS 5.5 TO BE STORED IN THE MLF COMPUTER HSM FOR PROGRAMS BE01 AND BE02.

5.7 SUCCESSFUL EXECUTION OF BT01 WILL BE DISPLAYED AND OPTIONS AVAILABLE FORMAT WILL BE REDISPLAYED FOR ANOTHER SELECTION OR ERROR MESSAGES WILL BE DISPLAYED PER SECTIONS 10A AND 10B OF OPERATOR REFERENCE MANUAL.

5.8 SELECT OTHER BT01 OPTIONS BY KEYBOARD ENTRIES AS REQUESTED BY THE PROGRAM TO MODIFY BE01 RP-1 TEMPERATURE PROBE READING ROUTINE PER SECTION 9 BT01/BE01/BE02 TABLE 1 OF OPERATOR REFERENCE MANUAL.

REVISIONS			
SYM	DESCRIPTION	DATE	APPROVAL

5.9 CALL UP AND EXECUTE PROGRAM BE01 OPTION Z BY ENTERING $FUNCBE01/SSSZ AT THE DISPLAY CONSOLE WHERE SSS IS DESIRED SCAN RATE IN SECONDS BETWEEN 10 SECONDS AND 10 MINUTES. SIMULATE TEMPERATURE READINGS OF RP1 AS REQUIRED BY THE PROGRAM.

NOTE: WHEN REQUIRED BY THE PROGRAM, REQUEST THE T/M GROUP TECHNICIAN TO VARY THE POTENTIOMETER SETTINGS AT THE S-IC STAGE SIMULATOR PANEL 1A3 TO SIMULATE THE THREE RP1 TEMPERATURE SIGNALS AS SHOWN BELOW. THE SIGNAL LEVELS CAN BE VERIFIED AT THE QUICK LOOK PANEL IN THE DDAS GROUND STATION.

TEMP. PROBE	POTENTIOMETER	DDAS CHANNEL
T-1 (C302-117)	1A3R107	AP1B0-20-09-00
T-2 (C301-117)	1A3R116	AP1BO-20-02-00
T-3 (C300-117)	1A3R106	AP1BO-20-01-00

5.10 SELECT OTHER BE01 OPTIONS BY KEYBOARD ENTRIES AS REQUESTED BY THE PROGRAM PER SECTION 9 BT01/BE01/BE02 TABLE 1 OF OPERATOR REFERENCE MANUAL.

5.11 REQUEST THE TECHNICIAN AT THE MASS LOADING SIMULATOR PANEL IN THE MLF TO PERFORM THE FOLLOWING OPERATIONS AS REQUESTED BY THE PROGRAM TO SIMULATE MASS LOADING PERCENTAGE LEVELS.

(1). PLACE THE ENABLE SWITCH IN THE "CLOSED" POSITION FOR THE SYSTEM TO BE SIMULATED. THE SYSTEMS AVAILABLE ARE S-IC LOX AUTO, S-IC LOX MANUAL, S-IC RP1 AUTO, AND S-IC RP1 MANUAL.

(2). PLACE THE PERCENTAGE LEVEL SWITCHES IN THE APPROPRIATE POSITION TO OBTAIN THE PERCENTAGE READINGS AT THE COMPUTER AS REQUESTED BY THE PROGRAM. BY PROPER SELECTION OF SWITCHES, ANY LEVEL BETWEEN 0.01% AND 100% CAN BE SIMULATED. THE SWITCHES LABELLED WITH A (+) MUST BE USED FIRST IN SETTING UP A PERCENTAGE READING.

(3) PLACE THE ENABLE SWITCH IN THE "OFF" POSITION WHEN SIMULATION OF THAT SYSTEM IS NO LONGER REQUIRED BY THE PROGRAM.

5.12 BE01 OUTPUT DATA MESSAGES ON MASS, DENSITY AND TEMPERATURE WILL BE DISPLAYED OR ERROR MESSAGES WILL BE DISPLAYED PER SECTIONS 10A AND 10B OF OPERATOR REFERENCE MANUAL.

REVISIONS			
SYM	DESCRIPTION	DATE	APPROVAL

5.13 TERMINATE BE01 BY ENTERING $FUNTBE01 AT THE KEYBOARD.

5.14 TERMINATE BT01 BY ENTERING $TERMBT01 AT THE KEYBOARD.

5.15 CALL UP AND EXECUTE PROGRAM BE02 BY ENTERING $FUNCBE02/SSSN AT THE KEYBOARD TO MONITOR THE PROPELLANT LEVELS WHERE "SSS" IS THE TIME IN SECONDS BETWEEN 10 SECONDS AND 10 MINUTES AND "N" IS THE STAGE MONITOR OPTIONS AS FOLLOWS"

1 = S-IC STAGE
2 = S-II STAGE
3 = S-IVB STAGE
7 = ALL STAGES

5.16 REQUEST THE TECHNICIANS AT THE MASS LOADING SIMULATOR PANEL IN THE MLF TO ENABLE THE SYSTEMS AND SET THE PERCENTAGE READINGS AS REQUIRED FOR BE02 SIMILAR TO PROCEDURE IN STEP 5.11.

5.17 REQUEST THE TECHNICIAN AT THE 5 VOLT DISCRETE MEASUREMENT SIMULATOR PANEL TO PLACE SWITCHES S1 THROUGH S4 IN THE APPROPRIATE POSITION TO SIMULATE THE DISCRETE LOX LEVEL MEASUREMENT (L10-119) AS REQUIRED FOR BE02.

NOTE: THE LOX LEVEL INPUT CONSISTS OF A DISCRETE LEVEL MADE UP OF A 4 BIT BINARY WORD (L10-119) AND A RAMP LEVEL MADE UP OF A 10 BIT BINARY WORD (L2-119 IN STEP 5.18). THE DISCRETE LOX LEVEL SIGNAL (L10-119) WILL BE SIMULATED BY THE FOLLOWING SWITCHES ON THE 5 VOLT DISCRETE MEASUREMENT SIMULATOR PANEL.

SWITCH NO.	BIT NO.	COUNT VALUE	QUICK LOOK CHANNEL
S1	4	2^3 (8)	AP1B0-19R03-06
S2	3	2^2 (4)	AP1B0-19R03-07
S3	2	2^1 (2)	AP1B0-19R03-08
S4	1	2^0 (1)	AP1B0-19R03-09

FOR EXAMPLE, SWITCH S1 WOULD BE PLACED TO THE "ON" POSITION FOR A BINARY 2^3 (OR A COUNT OF 8). SIMILARLY, SWITCH S3 AND S4 WOULD BOTH BE PLACED TO THE "ON" POSITION FOR A COUNT OF 3.

5.18 REQUEST THE TECHNICIAN AT THE 5 VOLT DISCRETE MEASUREMENT SIMULATOR PANEL TO PLACE SWITCHES S6 THROUGH S15 IN THE APPROPRIATE POSITION TO SIMULATE THE LOX TANK RAMP LEVEL MEASUREMENT (L2-119) AS REQUIRED FOR PROGRAM BE02.

REVISIONS			
SYM	DESCRIPTION	DATE	APPROVAL

5.18 Continued

NOTE: THE LOX TANK RAMP LEVEL WILL BE SIMULATED BY THE FOLLOWING SWITCHES ON THE 5 VOLT DISCRETE MEASUREMENT PANEL AND CAN BE MONITORED ON QUICK LOOK CHANNEL AP1B2-17G00-00.

SWITCH NO.	COUNT VALUE
S6	2^9 (512)
S7	2^8 (256)
S8	2^7 (128)
S9	2^6 (64)
S10	2^5 (32)
S11	2^4 (16)
S12	2^3 (8)
S13	2^2 (4)
S14	2^1 (2)
S15	2^0 (1)

SINCE THE COMPUTER LOOKS AT ALL 10 BITS OF THE WORD, SWITCH S8 WOULD BE PLACED ON THE "ON" POSITION FOR A BINARY 2^7 (OR 128). HOWEVER, THE PROGRAM WILL NOT RECOGNIZE AN INITIAL COUNT OF LESS THAN $2^5 + 2^4 + 2^1$ (OR 50), OR A FINAL COUNT OF MORE THAN $2^9 + 2^8 + 2^6 + 2^4 + 2^1$ (OR 850). THERFORE, THE FIRST INPUT MUST BE A 2^6 COUNT (OR 64), OR A COMBINATION OF LOWER COUNTS THAT EQUAL 50 OR MORE.

5.19 REQUEST THE TECHNICIAN AT THE 5 VOLT DISCRETE MEASUREMENT SIMULATOR PANEL TO PLACE SWITCHES S16 THROUGH S19 IN THE APPROPRIATE POSITION TO SIMULATE THE DISCRETE FUEL LEVEL MEASUREMENT AS REQUIRED FOR BE02.

NOTE: THE FUEL LEVEL INPUT CONSISTS OF A DISCRETE LEVEL MADE UP OF A 4 BIT BINARY WORD (L11-119) AND A RAMP LEVEL MADE UP OF A 10 BIT BINARY WORD (L6-117, IN STEP 5.20). THE DISCRETE FUEL LEVEL SIGNAL (L11-119) WILL BE SIMULATED BY THE FOLLOWING SWITCHES ON THE 5 VOLT DISCRETE MEASUREMENT SIMULATOR PANEL.

SWITCH No.	BIT NO.	COUNT VALUE	QUICK LOOK CHANNEL
S16	4	2^3 (8)	AP1B0-19R03-02
S17	3	2^2 (4)	AP1B0-19R03-03
S18	2	2^1 (2)	AP1B0-19R03-04
S19	1	2^0 (1)	AP1B0-19R03-05

REVISIONS			
SYM	DESCRIPTION	DATE	APPROVAL

5.20 REQUEST THE TECHNICIAN AT THE 5 VOLT DISCRETE MEASUREMENT SIMULATOR PANEL TO PLACE SWITCHES S21 THROUGH S30 IN THE APPROPRIATE POSITION TO SIMULATE THE FUEL TANK RAMP LEVEL MEASUREMENT (L6-117) AS REQUIRED FOR PROGRAM BE02.

NOTE: THE FUEL TANK RAMP LEVEL WILL BE SIMULATED BY THE FOLLOWING SWITCHES ON THE 5 VOLT DISCRETE MEASUREMENT PANEL AND CAN BE MONITORED ON QUICK LOOK CHANNEL AP1B3-18G00-00.

SWITCH NO.	COUNT VALUE
S21	2^9 (512)
S22	2^8 (256)
S23	2^7 (128)
S24	2^6 (64)
S25	2^5 (32)
S26	2^4 (16)
S27	2^3 (8)
S28	2^2 (4)
S29	2^1 (2)
S30	2^0 (1)

SINCE THE COMPUTER LOOKS AT ALL 10 BITS OF THE WORD, SWITCH S23 WOULD BE PLACED TO "ON" FOR A BINARY 2^7 (OR A COUNT OF 128). HOWEVER, THE PROGRAM WILL NOT RECOGNIZE AN INITIAL COUNT OF LESS THAN $2^5 + 2^4 + 2^1$ (OR 50), OR A FINAL COUNT OF MORE THAN $2^9 + 2^8 + 2^6 + 2^1$ (OR 850). THEREFORE, THE FIRST INPUT MUST BE A COUNT OF 2^6 (OR 64), OR A COMBINATION OF LOWER COUNTS THAT EQUAL 50 OR MORE.

5.21 PROGRAM BE02 OUTPUT DATA ON MASS READOUTS AND PROPELLANT LIQUID LEVELS WILL BE DISPLAYED OR ERROR MESSAGES WILL BE DISPLAYED PER SECTIONS 10A AND 10B OF THE OPERATOR REFERENCE MANUAL.

5.22 TERMINATE PROGRAM BE02 BY ENTERING $FUNTBE02 AT THE KEYBOARD.

5.23 RESTORE ALL PANEL SWITCHES TO THEIR ORIGINAL POSITIONS.

REVISIONS			
SYM	DESCRIPTION	DATE	APPROVAL

6.0 ERROR MESSAGE TEST

6.1 VERIFY THAT PROGRAM BT01, BE01, AND BE02 ARE TERMINATED.

6.2 CALL UP PROGRAM BT01 PER STEPS 5.4 AND 5.4 AND PERFORM LOAD OPTION PER STEPS 5.5 AND 5.6.

6.3 VERIFY THAT ERROR MESSAGE "FUNCTION EXECUTOR NOT INITIALIZED" IS DISPLAYED AND PROGRAM BT01 IS TERMINATED.

6.4 REQUEST THE COMPUTER TECHNICIAN TO REMOVE THE GROUP 1 CARD (RP1 TEMPERATURE PROBE LIMITS) FROM THE FIRST POSITION AND PLACE IT IN THE LAST POSITION OF THE CARD DECK IN THE LCC COMPUTER CARD READER.

6.5 INITIALIZE PROGRAM BE01 PER STEP 5.1 AND PROGRAM BE02 PER STEP 5.2.

6.6 PERFORM STEP 6.2.

6.7 VERIFY THAT ERROR MESSAGE "ILLEGAL CARD FORMAT - BT01" IS DISPLAYED AND PROGRAM BT01 IS TEMINATED.

6.8 REQUEST THE COMPUTER TECHNICIAN TO RETURN THE CARD RELOCATED PER STEP 6.4 TO ITS ORIGINAL POSITION IN THE CARD DECK.

6.9 REQUEST THE COMPUTER TECHNICIAN TO TURN OFF THE LCC COMPUTER CARD READER.

6.10 PERFORM STEP 6.2.

6.11 VERIFY THAT ERROR MESSAGE "CARD READER ERROR - BT01" IS DISPLAYED AND PROGRAM BT01 IS TERMINATED.

6.12 REQUEST THE COMPUTER TECHNICIAN TO TURN ON THE LCC COMPUTER CARD READER AND TURN OFF THE LCC COMPUTER LINE PRINTER.

6.13 PERFORM STEP 6.2.

6.14 VERIFY THAT ERROR MESSAGE "PRINTER ERROR - BT01" IS DISPLAYED AND PROGRAM BT01 CONTINUES EXECUTION.

6.15 REQUEST THE COMPUTER TECHNICIAN TO TURN ON THE LCC COMPUTER LINE PRINTER AND PLACE THE DATA LINK IN THE TEST MODE.

6.16 VERIFY THAT ERROR MESSAGE "DATA LINK ERROR" IS DISPLAYED AND PROGRAM BT01 IS TERMINATED.

6.17 REQUEST THE COMPUTER TECHNICIAN TO RETURN THE DATA LINK TO THE NORMAL OPERATING MODE.

REVISIONS			
SYM	DESCRIPTION	DATE	APPROVAL

6.18 CALL UP PROGRAM BT01 PER STEPS 5.3 AND 5.4.

6.19 REQUEST THE COMPUTER TECHNICIAN TO P-STOP THE LCC COMPUTER AND SET THE ARITHMETIC OVERFLOW FLIP/FLOP FOR AN OVERFLOW CONDITION.

6.20 PERFORM PROGRAM BT01 LOAD OPTION PER STEPS 5.5 AND 5.6.

6.21 VERIFY THE ERROR MESSAGE "ARITHMETIC OVERFLOW - BT01" IS DISPLAYED AND PROGRAM BT01 IS TERMINATED.

6.22 REQUEST THE COMPUTER TECHNICIAN TO RESTORE THE ARITHMETIC OVERFLOW FLIP/FLOP TO NORMAL OPERATION.

6.23 CALL UP PROGRAM BT01 PER STEPS 5.3 AND 5.4.

6.24 ENTER MESSAGE $LOAD OR OTHER ERRONEOUS BT01 MESSAGE AT THE KEYBOARD.

6.25 VERIFY THAT ERROR MESSAGE "OPERATOR ERROR - REPEAT INSTRUCTION" IS DISPLAYED AND PROGRAM BT01 RETURNS TO THE AVAILABLE OPTIONS STEP.

6.26 ENTER MESSAGE $PTLIM60350 OR OTHER MESSAGE WITH UNACCEPTABLE TEMPERATURE LIMITS AT THE KEYBOARD.

6.27 VERIFY THAT ERROR MESSAGE "TEMPERATURE LIMITS NOT VALID" IS DISPLAYED AND PROGRAM BT01 RETURNS TO AVAILABLE OPTIONS STEP.

6.28 PERFORM PROGRAM BT01 LOAD OPTION PER STEPS 5.5 AND 5.6.

6.29 CALL UP PROGRAM BE01 BY ENTERING $FUNCBE01/010Z AT THE KEYBOARD.

6.30 ENTER MESSAGE $FUNCBE01/005Z OR OTHER BE01 MESSAGE WITH UNACCEPTABLE PROGRAM SCAN RATE AT THE KEYBOARD.

6.31 VERIFY THAT ERROR MESSAGE "SCAN RATE NOT VALID - BE01 TERMINATED" IS DISPLAYED.

6.32 PERFORM STEP 6.29.

6.33 ENTER PROGRAM BT01 OPTIONS $POMIT1, $POMIT2 AND $POMIT3 AT THE KEYBOARD.

6.34 VERIFY THAT ERROR MESSAGE "THIS SCAN WAS BYPASSED" IS DISPLAYED AND PROGRAM BE01 CONTINUES TO SCAN.

6.35 ENTER PROGRAM BT01 OPTIONS $PENAB1, $PENAB2 AND $PENAB3 AT THE KEYBOARD.

REVISIONS			
SYM	DESCRIPTION	DATE	APPROVAL

6.36 REQUEST THE TM TECHNICIAN TO ADJUST POTENTIOMETERS 1A3R106, 1A3R107 AND 1A3R116 FOR MAXIMUM OUTPUT.

6.37 VERIFY THAT ERROR MESSAGE "BE01 T-0 EXTRAPOLATION INVALID" IS DISPLAYED AND PROGRAM BE01 CONTINUES TO SCAN.

6.38 REQUEST THE TM TECHNICIAN TO RE-ADJUST POTENTIOMETERS 1A3R106, 1A3R107 AND 1A3R116 TO THEIR ORIGINAL OUTPUT SETTINGS.

6.39 ON THE LOX SYSTEM PANEL, PLACE SWITCH S22 TO THE "ON" POSITION.

6.40 VERIFY THAT ERROR MESSAGE "LOX PRESSURIZED - BE01 TERMINATED" IS DISPLAYED.

6.41 ON THE LOX SYSTEM PANEL, PLACE SWITCH S22 TO THE "AUTO" POSITION.

6.42 PERFORM STEP 6.29.

6.43 ENTER MESSAGE $FUNTBE01 AT THE KEYBOARD.

6.44 VERIFY THAT ERROR MESSAGE "FORCED TEST END - BE01" IS DISPLAYED.

6.45 PERFORM STEP 6.29.

6.46 ENTER MESSAGE $FUNCBE01/SSSM OR OTHER MESSAGE WITH INVALID BE01 OPTION AT THE KEYBOARD WHERE SSS IS THE REQUIRED PROGRAM SCAN RATE.

6.47 VERIFY THAT ERROR MESSAGE "OPTIONS NOT VALID - BE01 TERMINATED" IS DISPLAYED.

6.48 ENTER MESSAGE $FUNCBE02/0051 OR OTHER BE02 MESSAGE WITH UNACCEPTABLE PROGRAM SCAN RATE AT THE KEYBOARD.

6.49 VERIFY THAT ERROR MESSAGE "SCAN RATE NOT VALID - BE02 TERMINATED" IS DISPLAYED.

6.50 PERFORM STEPS 5.14 AND 5.15.

6.51 ON LOX SYSTEM PANEL, PLACE SWITCH S22 TO THE "ON" POSITION.

6.52 VERIFY THAT ERROR MESSAGE "LOX PRESSURIZED - BE02 TERMINATED" IS DISPLAYED.

6.53 ON LOX SYSTEM PANEL, PLACE SWITCH S22 TO THE "AUTO" POSITION.

6.54 PERFORM STEP 5.15.

6.55 ENTER MESSAGE $FUNTBE02 AT THE KEYBOARD.

REVISIONS			
SYM	DESCRIPTION	DATE	APPROVAL

6.56 VERIFY THAT ERROR MESSAGE "FORCED TEST END - BE02" IS DISPLAYED.

6.57 RETURN ALL PANEL SWITCHES TO THEIR ORIGINAL POSITIONS, POWER DOWN THE S-II +2D110 GETS POWER BUS, POWER DOWN THE S-IC ESE AND STAGE SIMULATOR, AND REMOVE ALL SPECIAL TEST EQUIPMENT USED FOR THESE PROGRAMS.

6.58 THE ERROR MESSAGES AVAILABLE FOR DISPLAY BY PROGRAMS BT01, BE01 AND BE02 ARE LISTED BELOW.

ERROR MESSAGE	PROGRAM
FUNCTION EXECUTOR NOT INITIALIZED	BT01
DATA LINK ERROR	BT01
ILLEGAL CARD FORMAT - BT01	BT01
CARD READER ERROR - BT01	BT01
ARITHMETIC OVERFLOW - BT01	BT01
OPERATOR ERROR - REPEAT INSTRUCTION	BT01
TEMPERATURE LIMITS NOT VALID	BT01
PRINTER ERROR - BT01	BT01
LOX PRESSURIZED - BE01 TERMINATED	BE01
FORCED TEST END - BE01	BE01
SCAN RATE NOT VALID - BE01 TERMINATED	BE01
THIS SCAN WAS BYPASSED	BE01
BE01 T-0 EXTRAPOLATION INVALID	BE01
OPTIONS NOT VALID - BE01 TERMINATED	BE01
FORCED TEST END - BE02 TERMINATED	BE02
LOX PRESSURIZED - BE02 TERMINATED	BE02
SCAN RATE NOT VALID - BE02 TERMINATED	BE02

MSFC FORM 422 (VERTICAL) (AUGUST 1960)

NOTICE — When Government drawings, specifications, or other data are used for any purpose other than in connection with a definitely related Government procurement operation, the United States Government thereby incurs no responsibility nor obligation whatsoever; and the fact that the Government may have formulated, furnished, or in any way supplied the said drawings specifications or other data is not to be regarded by implication or otherwise as in any manner licensing the holder or any other person or corporation, or conveying any rights or permission to manufacture, use, or sell any patented invention that may in any way be related thereto.

APPLICATION		PART No.	MF	REVISIONS			
NEXT ASSY	USED ON			SYM	DESCRIPTION	DATE	APPROVAL

AS-503

VERIFICATION PROCEDURE

S-II PROPELLANT UTILIZATION (PTP5)

73V1802

UNLESS OTHERWISE SPECIFIED DIMENSIONS ARE IN INCHES TOLERANCES ON: FRACTIONS DECIMALS ANGLES	ORIGINAL DATE OF DRAWING 7/22/68 DRAFTSMAN / CHECKER TRACER / CHECKER ENGINEER / ENGINEER SUBMITTED Julius B. Campbell J. B. CAMPBELL APPROVED H. B. Harrison H. B. HARRISON	S-II PROPELLANT UTILIZATION (PTP5) SA-503	GEORGE C. MARSHALL SPACE FLIGHT CENTER NATIONAL AERONAUTICS AND SPACE ADMINISTRATION HUNTSVILLE, ALABAMA
MATERIAL			
HEAT TREATMENT			
FINAL PROTECTIVE FINISH		SCALE UNIT WT	DWG SIZE A 73V1802 SHEET 1 OF 7

REVISIONS			
SYM	DESCRIPTION	DATE	APPROVAL

1.0 SCOPE

THIS PROCEDURE WILL VERIFY THE PROPELLANT SYSTEM PROGRAMS. S-II "PROPELLANT UTILIZATION FUNCTIONAL TEST PROGRAM", PTP5.

2.0 APPLICABLE GOVERNMENT FURNISHED DOCUMENTS

AESS S-II ESE SATURN V	40M10590
AESS S-II STAGE SIMULATOR	40M34242
OPERATOR REFERENCE MANUAL FOR SLCC PROGRAMMING SYSTEM, VEHICLE AS-503	IBM No. 68-F11-0003
SPECIFICATIONS FOR THE TEST PROGRAMS FOR THE SATURN V LAUNCH COMPUTER COMPLEX, VOLUMES I AND II	MSFC No. 1-4-441-9 IBM No. 66-F11-0006

3.0 GENERAL NOTES

PTP5 WILL BE ENTERED FROM KEYBOARD IN ACCORDANCE WITH THE OPERATOR REFERENCE MANUAL. ALL PROGRAM OPTIONS WILL BE EXERCISED AND HARDWARE RESPONSE WILL BE MONITORED.

4.0 PREREQUISITES

NONE

REVISIONS			
SYM	DESCRIPTION	DATE	APPROVAL

5.0 PROCEDURE

5.1 S-II SHALL BE POWERED UP.

5.2 VERIFY THAT MAIN BUS POWER 2D111 IS ON.

5.3 VERIFY THAT THE P.U. UNIT HAS BEEN RESET.

5.4 VERIFY THAT S40 IN 32A3 PANEL IS IN POSITION 1.

5.5 VERIFY THAT 400 HZ POWER IS ON.

5.6 IU SHALL BE POWERED UP AND SWITCH SELECTOR ON LINE.

5.7 AT SANDERS DISPLAY CONSOLE NO. 6 ENTER S-II PROPELLANT UTILIZATION, PTP5 IN ACCORDANCE WITH SECTION 9 OF THE IBM OPERATOR REFERENCE MANUAL.

5.8 DURING PTP5 VERIFICATION THE FOLLOWING MDO's, LDO's AND DDAS DISCRETES WILL BE UTILIZED. MDI's CAN BE VERIFIED BY DEE-6 PRINTOUTS AND VISUAL INDICATIONS AT THE PROPELLANT UTILIZATION PANEL.

SIGNAL	NOMENCLATURE
MDO 1282	P. U. SYSTEM RESET
MDO 0554	MASS TEST LOX 1/3
MDO 0555	MASS TEST LOX EMPTY
MDO 0556	MASS TEST LH 1/3
MDO 0557	MASS TEST LH EMPTY
MDO 0558	MASS TEST LOX FULL
MDO 0559	MASS TEST LOX 2/3
MDO 0560	MASS TEST LH FULL
MDO 0561	MASS TEST LH 2/3
MDO 0563	VALVES TEST INCREASE
MDO 1130	VALVES TEST ON
MDO 0562	VALVES TEST DECREASE

REVISIONS			
SYM	DESCRIPTION	DATE	APPROVAL

MDI 1548	P. U. SYSTEM RESET
LDO 1397	MAIN BUS POWER
LDO 1396	SW. SELECTOR ZERO
EP1A2-26D01-05	2D15 BUS
BP1A2-19-02-00	P. U. 115 VAC 400 CPS POWER
BP1A2-06-01-00	OVEN TEMPERATURE
BP1B0-11L09-00	HEAT SINK TEMPERATURE
BP1B0-11L10-00	INTERNAL TEMPERATURE
BP1A2-21-10-00	SUMMING POINT ERROR SIGNAL
BP1A3-12-09-00	P. U. VALVE #1 POSITION VLTG.
BP1B0-06-10-00	P. U. VALVE #2 POSITION VLTG.
BP1B0-01-05-00	P. U. VALVE #3 POSITION VLTG.
BP1A3-01-08-00	P. U. VALVE #4 POSITION VLTG.
BP1A3-01-09-00	P. U. VALVE #5 POSITION VLTG.
BP1B0V07-07-00	LOX FINE MASS VOLTAGE
BP1B0V23-05-00	LH2 FINE MASS VOLTAGE

CHANNEL	
32	PROPELLANT UTILIZATION RESET

REVISIONS			
SYM	DESCRIPTION	DATE	APPROVAL

6.0 ERROR MESSAGES

6.1 PLACE S14 ON NETWORKS PANEL TO AUTO POSITION.

6.2 ADJUST R101 FOR ZERO OUTPUT IN 28A7 (C886-214).

6.3 PLACE S40 ON 32A3 PANEL TO POSITION 2.

6.4 INSTALL BREAKOUT BOX BETWEEN CABLE 33W10 AND 33A1 J40. INSTALL SHORTING PLUGS ON ALL PINS EXCEPT PIN N.

6.5 PLACE S1 ON PROPELLANT UTILIZATION PANEL TO THE 1/3 POSITION.

6.6 CALL PROGRAM PTP5 PER SECTION 5.6 OF 73V1802.

6.7 VERIFY ERROR MESSAGE AS FOLLOWS:

"MDO 554 NOT IN DESIRED STATE"

6.8 PLACE S1 ON PROPELLANT UTILIZATION PANEL TO AUTO.

6.9 PLACE S4 ON PROPELLANT UTILIZATION PANEL TO THE ACTIVATE POSITION THEN AUTO.

6.10 RETEST BY ENTERING $PAC.

6.11 VERIFY ERROR MESSAGES AS FOLLOWS:

"MDI 1548 OFF INCORRECT STATUS FOR PU SYSTEM RESET"

"LDO 1398 MAIN BUS POWER NOT IN DESIRED STATE"

"PU 115 VAC 400 CPS PNR VLTG OUT OF TOLERANCE"

6.12 PLACE S14 ON NETWORKS PANEL TO ON POSITION.

6.13 MOMENTARILY PLACE S3 ON PROPELLANT UTILIZATION PANEL TO RESET.

6.14 PLACE S40 ON 32A3 PANEL TO POSITION 1.

6.15 RETEST BY ENTERING & PAC.

6.16 VERIFY ERROR MESSAGE AS FOLLOWS:

"OVEN TEMPERATURE OUT OF TOLERANCE XXXX DEGREES"

6.17 VERIFY THAT ERROR MESSAGE IS DISPLAYED AGAIN IN APPROXIMATELY ONE MINUTE.

6.18 ADJUST R101 FOR VAC OUTPUT IN 28A7 (C886-214).

REVISIONS			
SYM	DESCRIPTION	DATE	APPROVAL

6.19 VERIFY ERROR MESSAGE AS FOLLOWS:

"SUMMING POINT ERROR SIGNAL DOES NOT CALIBRATE CORRECTLY IN THE HI MODE RESPONSE WAS 0.00 VAC".

6.20 JUMP TO Ø3 BY ENTERING $PCØ3.

6.21 VERIFY ERROR MESSAGE AS FOLLOWS:

"SUMMING POINT VOLTAGE OUT OF TOLERANCE VALVE 0.00 VAC".

6.22 INSTALL SHORTING PLUG AT PIN N OF BREAKOUT BOX AT 33A1 J40.

6.23 RETEST BY ENTERING $PAC.

6.24 VERIFY ERROR MESSAGE AS FOLLOWS:

"SUMMING POINT ERROR VOLTAGE OUT OF TOLERANCE WITH STORED VALVE HIGH TOL. XXX LOX TOL. XXX PRESENT VLTG XXX.

6.25 REMOVE SHORTING PLUG FROM PIN P OF BREAKOUT BOX AT 33A1 J40.

6.26 JUMP TO Ø 1 BY ENTERING $PAØ1.

6.27 VERIFY ERROR MESSAGE AS FOLLOWS:

"PU VALVE #1 POSITION VOLTAGE OUT OF TOLERANCE 0.00 VDC".

"PU VALVE #5 POSITION VOLTAGE OUT OF TOLERANCE 0.00 VAC".

6.28 CONTINUE BY ENTERING $PAC.

6.29 TERMINATE BY ENTERING $ TERM PTP5.

6.30 REMOVE STAGE POWER.

6.31 REMOVE BREAKOUT BOX AT 33A1 J40 AND RECONNECT CABLE 33N10.

REVISIONS			
SYM	DESCRIPTION	DATE	APPROVAL

6.32 LIST OF ERROR MESSAGES

MDO XXXX NOT IN DESIRED STATE

MDI 1548 XX INCORRECT STATUS FOR PU SYSTEM RESET

LDO 1398 MAIN BUS POWER NOT IN DESIRED STATE

PU 115 VAC 400 CPS POWER VLTG OUT OF TOLERANCE

XXXX TEMPERATURE OUT OF TOLERANCE YYY DEGREES

SUMMING POINT ERROR SIGNAL DOES NOT CALIBRATE CORRECTLY
IN THE XXX MODE RESPONSE WAS Y.YY VDC.

SUMMING POINT ERROR VOLTAGE OUT OF TOLERANCE VALVE X.XX.

SUMMING POINT ERROR VOLTAGE OUT OF TOLERANCE WITH STORED
VALUE HIGH TOL X.XX, LOW TOL Y.YY PRESENT VLTG Z.ZZ.

XXX YYY FINE MASS VOLTAGE OUT OF TOLERANCE
WITH STORED TABLE VALUE, DISCREPANCY E.EE.

XXX = LOX OR LH_2
YYY = EMPTY, 1/3, 2/3, OR FULL
E.EE = VOLTAGE VALUE: INDICATES AMOUNT OF TOLERANCE

MSFC FORM 422 (VERTICAL) (AUGUST 1960)

NOTICE — When Government drawings, specifications, or other data are used for any purpose other than in connection with a definitely related Government procurement operation, the United States Government thereby incurs no responsibility nor obligation whatsoever; and the fact that the Government may have formulated, furnished, or in any way supplied the said drawings specifications or other data is not to be regarded by implication or otherwise as in any manner licensing the holder or any other person or corporation, or conveying any rights or permission to manufacture, use, or sell any patented invention that may in any way be related thereto.

APPLICATION		PART No.	M F	REVISIONS			
NEXT ASSY	USED ON			SYM	DESCRIPTION	DATE	APPROVAL

SA-503

VERIFICATION PROCEDURE

S-IVB PROPELLANT UTILIZATION (PTP4)

73V1805

UNLESS OTHERWISE SPECIFIED DIMENSIONS ARE IN INCHES TOLERANCES ON: FRACTIONS DECIMALS ANGLES	ORIGINAL DATE OF DRAWING 5/13/68	S-IVB PROPELLANT UTILIZATION (PTP4)	GEORGE C. MARSHALL SPACE FLIGHT CENTER NATIONAL AERONAUTICS AND SPACE ADMINISTRATION HUNTSVILLE, ALABAMA
MATERIAL	DRAFTSMAN / CHECKER TRACER / CHECKER ENGINEER / ENGINEER		
HEAT TREATMENT	SUBMITTED Stephen P. Weiss H. C. DANIELS		
FINAL PROTECTIVE FINISH	APPROVED R. A. Drakey R. A. DRAKEY	SCALE UNIT WT	DWG SIZE A 73V1805 SHEET 1 OF 30

REVISIONS			
SYM	DESCRIPTION	DATE	APPROVAL

1.0 SCOPE

This procedure describes the instructions to verify IBM Test Program, S-IVB Propellant Utilization (PTP4).

2.0 APPLICABLE GOVERNMENT FURNISHED DOCUMENTS

2.1 9001 (500ST) - Control System Schematics

2.2 9001 (500ST) - Instrumentation System Schematics

2.3 40M13870 - Advanced Electrical System Schematics, S-IVB ESE Saturn V

2.4 III-4-440-5 - Operator Reference Manual for the Saturn V Launch Computer Complex Vehicle AS-503, dated May 1, 1968

3.0 GENERAL NOTES

The test program will be called up and executed as described in the IBM User's Manual. Each option will be exercised and hardware stimulation checked.

4.0 PREREQUISITES

4.1 IU powered up (switch selector operative.).

4.2 Verify LVDA/ESE switch in ESE position.

4.3 S-IVB powered up.

4.4 IU and S-IVB DDAS and Telemetry on line and supporting.

4.5 Switch setup

4.5.1 On the S-IVB Propellant Utilization Panel, perform or verify the following:

Verify all switches are in the "AUTO" position.

NOTE: The P.U. Oven & Inverter Power should be on approximately forty-five (45) minutes prior to running the program in order to allow this assembly to stabilize.

4.5.2 On the S-IVB Propellant Monitor Panel, verify the following:

LOX Tank not Overfilled (DS42) "ON"
LH Tank not Overfilled (DS90) "ON"
LOX Fast Fill Sensor Wet (DS41) "OFF"
LH Fast Fill Sensor Wet (DS89) "OFF"

REVISIONS			
SYM	DESCRIPTION	DATE	APPROVAL

4.5.3 On the Aft Depletion Control Assembly (406A98), perform the following:

Depletion (S3) "CHECKOUT"
Fast Fill (S1) "CHECKOUT"
Over Fill (S2) "DRY"

4.5.4 On the Forward Depletion Control Assembly (411A150), perform the following:

Depletion (S3) "CHECKOUT"
Fast Fill (S1) "CHECKOUT"
Over Fill (S2) "DRY"

5.0 PROCEDURE

5.1 Test Program "S-IVB Propellant Utilization (PTP4)" will be called into high speed memory from the Sanders Display Console using card key No. 9. It will be called up and executed in accordance with Section 7, Paragraph 3.0 of the IBM User's Manual.

5.2 Each option will be exercised and each message as described in the User's Manual shall be displayed.

5.3 To execute new calculation for proper mass ratio via card reader, 12 cards are necessary followed by a blank card.

CARD COLUMN

1 2 3 4 5 6 7 8 9 10 11 12 13 14 15 16 17 18			
0 . 0 0 0	F	1	Card #1
0 . 0 0 0	C	1	2
0 . 2 9 7	F	2	3
0 . 2 9 4	C	2	4
0 . 6 2 1	F	3	5
0 . 6 1 4	C	3	6
0 . 0 0 0	F	4	7
0 . 0 0 0	C	4	8
0 . 2 9 4	F	5	9
0 . 2 9 1	C	5	10
0 . 5 9 9	F	6	11
0 . 5 9 3	C	6	12
Blank			13

6.0 ERROR MESSAGES

Special equipment: Breakout Box 1 installed at B202-421A1, J43
Breakout Box 2 installed at B202-421A1, J45

NOTE: The HARD COPY feature of the Sanders Display System may be used throughout the procedure to obtain a permanent record of displayed messages.

REVISIONS			
SYM	DESCRIPTION	DATE	APPROVAL

6.1 Place the LOX BRIDGE AUTO CHECKOUT switch (S7) and the LH BRIDGE AUTO CHECKOUT switch (S9) on the S-IVB Propellant Utilization Panel to the 1/3 position. Insure PU power is off.

6.2 Enter $SLDI0586 and observe the following message:

SLDI0586 ØN

6.3 Enter $SLDI0588 and observe the following message:

SLDI0588 ØN

6.4 Perform steps 3.1.2.1,b,(1), through 3.1.2.1,b,(3).

6.5 Enter $PX and observe the following message:

```
PTP4 S-IVB PRP UTL
TEST PROGRAM HAS STARTED EXECUTION
PU SUBSYSTEM TEST - 503
HH MM/SS XXXXXXXXXXXXXXXXXXXXXXXXXXXXXX
SWITCH DISCRETE/S (LDI) NOT IN DESIRED STATE/S
    0586 ØN          0588 ØN
XXXXXXXXXXXXXXXXXXXXXXXXXXXXXXXXXXXXXXX
VEHICLE DISCRETE/S (MDO) NOT IN DESIRED STATE/S
    0586 ØN          0588 ØN
XXXXXXXXXXXXXXXXXXXXXXXXXXXXXXXXXXXXXXX
VEHICLE DISCRETE/S (MDI) NOT IN DESIRED STATE/S
    1828 ØFF
XXXXXXXXXXXXXXXXXXXXXXXXXXXXXXXXXXXXXXX
SWITCH DISCRETE/S (LDO) NOT IN DESIRED STATE/S
    1828 ØFF
POINT    AC02
OPTION ENTRIES
$PRSUM
$PRTST
$PBTKUP
$PREET
$PXBZZ
$PTFLG
```

6.6 Place the LOX BRIDGE AUTO CHECKOUT switch (S7) and the LH BRIDGE AUTO CHECKOUT switch (S9) on the S-IVB Propellant Utilization Panel to the AUTO position.

6.7 Place the LH LEVEL SENSOR SIMULATE OVERFILL switch (S10) on the S-IVB Propellant Monitor Panel to the ON position.

6.8 Place the PROPELLANT UTILIZATION OVEN AND INVERTER PWR switch (S1) on the S-IVB Propellant Utilization Panel to the ON and then AUTO positions.

REVISIONS			
SYM	DESCRIPTION	DATE	APPROVAL

6.9 Enter $PRTST and observe the following message:

```
OPTION RTST BEING EXECUTED

XXXXXXXXXXXXXXXXXXXXXXXXXXXXXXXXXXXXXXXX
SWITCH DISCRETE/S (LDI) NOT IN DESIRED STATE/S
      2382 ØN
XXXXXXXXXXXXXXXXXXXXXXXXXXXXXXXXXXXXXXXXX
VEHICLE DISCRETE/S (MDØ) NOT IN DESIRED STATE/S
      1695 ØN
XXXXXXXXXXXXXXXXXXXXXXXXXXXXXXXXXXXXXXXXX
VEHICLE DISCRETE/S (MDI) NOT IN DESIRED STATE/S
      1781 OFF
XXXXXXXXXXXXXXXXXXXXXXXXXXXXXXXXXXXXXXXXX
SWITCH DISCRETE/S (LDØ) NOT IN DESIRED STATE/S
      1781 ØFF
POINT   ACD2
OPTION ENTRIES
$PRSUM
$PRTST
$PBKUP
$PREET
$PXBZZ
$PTFLG
```

6.10 Place the LH LEVEL SENSOR SIMULATE OVERFILL switch (S10) on the S-IVB Propellant Monitor Panel to the AUTO position.

6.11 Place the PROPELLANT UTILIZATION OVEN AND INVERTER PWR Switch (S1) on the S-IVB Propellant Utilization Panel to the OFF and then AUTO position.

6.12 Place the S-IVB SWITCH SELECTOR INHIBIT switch (S22) on the S-IVB NETWORKS Panel to the ON position.

6.13 Enter $PRSUM and observe the following message:

```
OPTION RSUM BEING EXECUTED

PU SUBSYSTEM POWER ON TEST
SWITCH SELECTOR ERROR CODE 0005
SIV SS CHAN 0007 NOT ISSUED - HARDWARE INHIBITED
XXXXXXXXXXXXXXXXXXXXXXXXXXXXXXXXXXXXXXXXXXXXXXXXXXX
1828 OFF
PU POWER NOT ON
POINT ADF4
OPTION ENTRIES
$PRSUM
$PRTST
$PBKUP
$PREET
$PXBZZ
$PTFLG
```

REVISIONS			
SYM	DESCRIPTION	DATE	APPROVAL

6.14 Place the SWITCH SELECTOR INHIBIT switch (S22) on the S-IVB Networks Panel to the OFF position.

6.15 Place the PROPELLANT UTILIZATION OVER AND INVERTER PWR Switch (S1) on the S-IVB Propellant Utilization Panel to the ON and then AUTO positions.

6.16 Enter $PRTST and observe the following message:

OPTION RTST BEING EXECUTED

PU ON TIME IS 0000
$PENDT TO TERMINATE
POINT ADH4
OPTION ENTRIES
$PRSUM
$PRTST
$PBKUP
$PREET
$PXBZZ
$PTFLG

NOTE: If at anytime, during execution of the program, an error message appears other than those induced, investigate and determine that the condition does indeed exist. Take corrective action and take the retest option ($PRTST).

6.17 Enter $PENDS and observe the following message:

ILLEGAL OPTION, RESELECT OPTION
POINT ADH4
OPTION ENTRIES
$PRSUM
$PRTST
$PBKUP
$PREET
$PXBZZ
$PRFLG

6.18 Enter $P1B03 and observe the following message:

FLAG 03 SET TO THE 1 STATE

6.19 Enter $PRSUM and observe the following message:

OPTION RSUM BEING EXECUTED

RATIOS AND VOLTAGES
COARSE MASS DATA

REVISIONS			
SYM	DESCRIPTION	DATE	APPROVAL

DESCRIPTION	RATIO VALUES	VOLTS
LOX EMPTY RATIO	0.025	0.12
LOX 1/3 BRIDGE SLEW RATIO	0.333	1.66
LOX 2/3 BRIDGE SLEW RATIO	0.666	3.32
LH2 EMPTY RATIO	0.025	0.12
LH2 1/3 BRIDGE SLEW RATIO	0.333	1.66
LH2 2/3 BRIDGE SLEW RATIO	0.666	3.32
RESIDUAL BIAS EMPTY		1.89
FINE MASS DATA		
LOX EMPTY RATIO	0.025	4.43
LOX 1/3 BRIDGE SLEW RATIO	0.333	4.62
LOX 2/3 BRIDGE SLEW RATIO	0.666	2.73
LH2 EMPTY RATIO	0.025	4.43
LH 2 1/3 BRIDGE SLEW RATIO	0.333	4.62
LH2 2/3 BRIDGE SLEW RATIO	0.666	2.73

TO EXECUTE NEW CALC VIA CARD READER ENTER $PRDCD
POINT ACG3
OPTION ENTRIES
$PRSUM
$PRTST
$PBKUP
$PREET
$PXBZZ
$PTFLG

6.20 Place the LCC S-IVB DDAS to SIMULATE Mode with all addresses set to an octal count of 0030.

6.21 Enter $PRSUM and observe the following message:

OPTION RSUM BEING EXECUTED

INVERTER CONVERTER CHECK
INV-CONV INT TEMP OUT OF TOL 0.000 OR DDAS
CHANNEL CP1A1-17-02-00 MALF
INV-CNV 115V OUT OF TOL (90.000)
OR CHAN CP1A1-17-04-MALF
INV-CONV 400CPS OUT OF TOL (390.000)
OR CHAN CP1A1-19-06 MALF
INV-CNV 21V OUR OF TOL (20.000)
OR CHAN CP1A1-13-07 MALF.
INV-CONV 5V OUT OF TOL (4.500)
OR CHAN CP1A1-17-05 MALF.
P.U. ASSY. INT TEMP OUT OF TOL (-50.000)
OR CHAN CP1A1-17-01 MALF.
P.U. OVEN ON VOLT OUT OF TOLERANCE (4.500)
OR CHAN CP1A3-15-05 MALF.
POINT AGB4
OPTION ENTRIES
$PRSUM
$PRTST
$PBKUP
$PREET
$PXBZZ
$PTFLG

REVISIONS			
SYM	DESCRIPTION	DATE	APPROVAL

6.22 Return the LCC S-IVB DDAS to the normal (RECEIVE) mode.

6.23 Enter $PRTST and observe the following message:

OPTION RTST BEING EXECUTED

INVERTER CONVERTER CHECK
OPTION ENTRIES
$PRSUM
$PBKUP
$PREET
$PXBZZ
$PTFLG
POINT B03
$PJPYY

6.24 Place the LCC S-IVB DDAS in the SIMULATE mode with address CP1A1-23-00 set to an octal count of 0030.

6.25 Enter $PRSUM and observe the following message:

OPTION RSUM BEING EXECUTED

SERVO BALANCED BRIDGE GAIN TEST
PU SYS ERROR SIG VOLT OUT OF TOL
(-2.000) OR CHAN MALF CP1A1-23-00
POINT BBB4
OPTION ENTRIES
$PRSUM
$PRTST
$PREET

6.26 Return the LCC S-IVB DDAS to the normal (RECEIVE) mode. Place the LCC IU DDAS in the SIMULATE MODE WITH ADDRESS DP1B0-22-10 set to an octal count of 0030.

6.27 Enter $PRTST and observe the following message:

OPTION RTST BEING EXECUTED

PU SYS RATIO VALVE VOLT OUT OF TOLERANCE
(0.000) OR DDAS CHAN DP1B0-22-10 MALF
POINT AGH4
OPTION ENTRIES
$PRSUM
$PRTST
$PBKUP
$PREET
$PXBZZ
$PTFLG

6.28 Place the LCC IU DDAS in the SIMULATE mode with all addresses set to all ones (5.12 Volts).

REVISIONS			
SYM	DESCRIPTION	DATE	APPROVAL

6.29 Enter $PRSUM and observe the following message:

```
        OPTION RSUM BEING EXECUTED
        FUTURE TESTS USING P.U. VLVE VOLTAGE
        MEASUREMENTS ARE NOT VALID
LOX COARSE MASS VOLT OUT OF TOL OR CHAN MLF
DP1B0-22-04 MEAS VALUE      5.XXX
LOX FINE   MASS VOLT OUT OF TOL OR CHAN MLF
DP1B0-17-00 MEAS VALUE      5.XXX
LH2 COARSE  MASS VOLT OUT OF TOL OR CHAN MLF
DP1B0-13-02  MEAS VALUE     5.XXX
LH2 FINE    MASS VOLT OUT OF TOL OR CHAN MLF
DP1B0-24-00  MEAS VALUE     5.XXX
POINT   BAD2
OPTION ENTRIES
$PRSUM
$PRTST
$PBKUP
$PREET
$PXBZZ
$PTFLG
```

6.30 Enter $PRSUM and observe the following message:

```
OPTION RSUM BEING EXECUTED

PU SYS RATIO VALVE VOLT OUT OF TOLERANCE
(5.XXX) OR DDAS CHAN DP1B0-22-10 MALF
POINT AHE2
OPTION ENTRIES
$PRSUM
$PRTST
$PBKUP
$PREET
$PXBZZ
$PTFLG
```

6.31 Enter $PRSUM and observe the following message:

```
        OPTION RSUM BEING EXECUTED
LOX COARSE MASS VOLT OUT OF TOL OR CHAN MLF
DP1B0-22-04   MEAS VALUE    5.XXX
LOX FINE      MASS VOLT OUT OF TOL OR CHAN MLF
DP1B0-17-00   MEAS VALUE    5.XXX
LH2 COARSE MASS VOLT OUT OF TOL OR CHAN MLF
DP1B0-13-02   MEAS VALUE    5.XXX
LH2 FINE      MASS VOLT OUT OF TOL OR CHAN MLF
DP1B0-24-00   MEAS VALUE    5.XXX
POINT         BAD2
OPTION ENTRIES
$PRSUM
$PRTST
$PBKUP
$PREET
$PXBZZ
$PTFLG
```

REVISIONS			
SYM	DESCRIPTION	DATE	APPROVAL

6.32 Enter $PRSUM and observe the following message:

OPTION RSUM BEING EXECUTED

PU SYS RATIO VALVE VOLT OUT OF TOLERANCE
(5.XXX) OR DDAS CHAN DP1B0-22-10 MALF
POINT AJB2
OPTION ENTRIES
$PRSUM
$PRTST
$PBKUP
$PREET
$PXBZZ
$PTFLG

6.33 Enter $PRSUM and observe the following message:

OPTION RSUM BEING EXECUTED

LOX COARSE MASS VOLT OUT OF TOL OR CHAN MLF
DP1B0-22-04 MEAS VALUE 5.XXX
LOX FINE MASS VOLT OUT OF TOL OR CHAN MLF
DP1B0-17-00 MEAS VALUE 5.XXX
LH2 COARSE MASS VOLT OUT OF TOL OR CHAN MLF
DP1B0-13-02 MEAS VALUE 5.XXX
LH2 FINE MASS VOLT OUT OF TOL OR CHAN MLF
DP1B0-24-00 MEAS VALUE 5.XXX
POINT BAD2
OPTION ENTRIES
$PRSUM
$PRTST
$PBKUP
$PREET
$PXBZZ
$PTFLG

6.34 Enter $PRSUM and observe the following message:

OPTION RSUM BEING EXECUTED

PU SYS RATIO VALVE VOLT OUT OF TOLERANCE
(5.XXX) OR DDAD CHAN DP1B0-22-10 MALF
POINT AJG2
OPTION ENTRIES
$PRSUM
$PRTST
$PBKUP
$PREET
$PXBZZ
$PTFLG

REVISIONS			
SYM	DESCRIPTION	DATE	APPROVAL

6.35 Enter $PRSUM and observe the following message:

OPTION RSUM BEING EXECUTED

LOX COARSE MASS VOLT OUT OF TOL OR CHAN MLF
DP1B0-22-04 MEAS VALUE 5.XXX
LOX FINE MASS VOLT OUT OF TOL OR CHAN MLF
DP1B0-17-00 MEAS VALUE 5.XXX
LH2 COARSE MASS VOLT OUT OF TOL OR CHAN MLF
DP1B0-13-02 MEAS VALUE 5.XXX
LH2 FINE MASS VOLT OUT OF TOL OR CHAN MLF
DP1B0-24-00 MEAS VALUE 5.XXX
POINT BAD2
OPTION ENTRIES
$PRSUM
$PRTST
$PBKUP
$PREET
$PXBZZ
$PTFLG

6.36 Enter $P1B04 and observe the following message:

FLAG 04 SET TO THE 1 STATE

6.37 Place the LOX AUTO C/O TEST Switch (S7) on the S-IVB Propellant Utilization Panel to the 1/3 position.

6.38 Enter $PRSUM and observe the following message:

OPTION RSUM BEING EXECUTED
XXXXXXXXXXXXXXXXXXXXXXXXXXXXXXXX
VEHICLE DISCRETES +MDOS CANNOT BE ISSUED
0586 NOFF

PU SYS RATIO VALVE VOLT OUT OF TOLERANCE
(5.XXX) OR DDAS CHAN DP1B0-22-10 MALF
POINT AKC3
OPTION ENTRIES
$PRSUM
$PRTST
$PBKUP
$PREET
$PXBZZ
$PTFLG

6.39 Return the LCC IU DDAS to RECEIVE.

REVISIONS			
SYM	DESCRIPTION	DATE	APPROVAL

6.40 Enter $PRSUM and observe the following message:

OPTION ENTRIES
$PRSUM
$PBKUP
$PREET
$PXBZZ
$PTFLG
POINT B04
$PJPYY

6.41 Place the LOX AUTO C/O TEST switch (S7) on the S-IVB Propellant Utilization Panel to the AUTO position.

6.42 Remove jumper from pin MM of breakout box 1.

6.43 Enter $PRSUM and observe the following message:

OPTION RSUM BEING EXECUTED

LOX TANK NOT OVERFILLED INDICATOR IS NOT ON
INITIALLY
POINT AKH4
OPTION ENTRIES
$PRSUM
$PRTST
$PBKUP
$PREET
$PXBZZ
$PTFLG

6.44 Place +28 VDC on the computer side of pin MM in breakout box 1.

6.45 Enter $PRSUM and observe the following message:

OPTION RSUM BEING EXECUTED

LOX TANK NOT OVERFILLED INDICATOR IS NOT OFF
POINT ALB3
OPTION ENTRIES
$PRSUM
$PRTST
$PBKUP
$PREET
$PXBZZ
$PTFLG

6.46 Remove the +28VDC from pin MM. Do not replace the jumper. Remove jumper from pin LL.

6.47 Enter $PRTST and observe the following message:

OPTION RTST BEING EXECUTED

REVISIONS			
SYM	DESCRIPTION	DATE	APPROVAL

LOX TANK NOT OVERFILLED INDICATOR IS NOT ON
POINT ALE3
OPTION ENTRIES
$PRSUM
$PRTST
$PBKUP
$PREET
$PXBZZ
$PTFLG

6.48 Enter $PRSUM and observe the following message:

OPTION RSUM BEING EXECUTED

LH2 TANK NOT OVERFILLED INDICATOR IS NOT ON
INITIALLY
POINT ALF3
OPTION ENTRIES
$PRSUM
$PRTST
$PBKUP
$PREET
$PXBZZ
$PTFLG

6.49 Place +28 VDC on the computer side of pin LL of breakout box 1.

6.50 Enter $PRSUM and observe the following message:

OPTION RSUM BEING EXECUTED

LH2 TANK NOT OVERFILLED INDICATOR IS NOT OFF
POINT ALJ2
OPTION ENTRIES
$PRSUM
$PBKUP
$PREET
$PXBZZ
$PTFLG

6.51 Remove the +28 VDC from pin LL. Do not replace the jumper.

6.52 Enter $PRSUM and observe the following message:

OPTION RSUM BEING EXECUTED

LH2 TANK NOT OVERFILLED INDICATOR IS NOT ON
POINT AMD4
OPTION ENTRIES
$PRSUM
$PRTST
$PBKUP
$PREET
$PXBZZ
$PTFLG

REVISIONS			
SYM	DESCRIPTION	DATE	APPROVAL

6.53 Replace the jumper in pin LL. Remove the jumper from pin NN and place +28 VDC on the computer side of the pin.

6.54 Enter $PRSUM and observe the following message:

```
OPTION RSUM BEING EXECUTED

LOX TANK FAST FILL INDICATOR IS NOT OFF
INITIALLY
POINT AME4
OPTION ENTRIES
$PRSUM
$PRTST
$PBKUP
$PREET
$PXBZZ
$PTFLG
```

6.55 Remove the +28 VDC from pin NN. Leave jumper out.

6.56 Enter $PRSUM and observe the following message:

```
OPTION RSUM BEING EXECUTED

LOX TANK FAST FILL INDICATOR IS NOT ON
POINT AMH4
OPTION ENTRIES
$PRSUM
RPRTST
$PBKUP
$PREET
$PXBZZ
$PTFLG
```

6.57 Remove the jumper from pin NN and place +28 VDC on the computer side of the pin.

6.58 Enter $PRSUM and observe the following message:

```
OPTION RSUM BEING EXECUTED

LOX TANK FAST FILL INDICATOR IS NOT OFF
POINT ANC3
OPTION ENTRIES
$PRSUM
$PRTST
$PBKUP
$PREET
$PXBZZ
$PTFLG
```

6.59 Replace the jumper in pin NN of breakout box 1. Remove the jumper from pin A of breakout box 2 and place +28 VDC on the computer side of the pin.

REVISIONS			
SYM	DESCRIPTION	DATE	APPROVAL

6.60 Enter $PRSUM and observe the following message:

```
OPTION RSUM BEING EXECUTED

LH2 TANK FAST FILL INDICATOR IS NOT OFF INITIALLY
POINT AND3
OPTION ENTRIES
$PRSUM
$PRTST
$PBKUP
$PREET
$PXBZZ
$PTFLG
```

6.61 Remove the +28 VDC from the computer side of pin A. Do not replace the jumper.

6.62 Enter $PRSUM and observe the following message:

```
OPTION RSUM BEING EXECUTED

LH2  TANK FAST FILL INDICATOR IS NOT ON
POINT ANG3
OPTION ENTRIES
$PRSUM
$PRTST
$PBKUP
$PREET
$PXBZZ
$PTFLG
```

6.63 Remove the jumper from pin A of breakout box 2 and place +28 VDC on the computer side of the pin.

6.64 Enter $PRSUM and observe the following message:

```
OPTION RSUM BEING EXECUTED

LH2 TANK FAST FILL INDICATOR IS NOT  OFF
POINT APB4
OPTION ENTRIES
$PRSUM
$PRTST
$PBKUP
$PREET
$PXBZZ
$PTFLG
```

6.65 Remove the +28 VDC from pin A and replace the jumper.

6.66 Enter $PRTST and observe the following message:

```
OPTION RTST BEING EXECUTED
```

REVISIONS			
SYM	DESCRIPTION	DATE	APPROVAL

```
RATIO VALVE VOLT INVALID REF, SERVO
BALANCED BRIDGE GAIN TEST
     POINT   APD4
OPTION ENTRIES
$PRSUM
$PRTST
$PBKUP
$PREET
$PXBZZ
$PTFL6
```

6.67 Place the VALVE POS ERROR SIGNAL Switch (S5) on the S-IVB Propellant Utilization Panel to the DECREASE position. Replace all jumpers.

6.68 Enter $PRTST and observe the following message:

```
OPTION RTST BEING EXECUTED

PU VALVE MOVEMENT TEST
A.  STRIP CHART RECORD FOR FOLLOWING PARAMETERS
    1.  VALVE POSITION ERROR SIGNAL TEST COMMAND
    2.  PU SYSTEM RATIO VALVE DP1B0-22-10
        POSITION
B.  TURN ON STRIP CHART RECORDER BEFORE
    CONTINUING AUTOMATIC TEST PROGRAM
    POINT APF2
OPTION ENTRIES
$PRSUM
$PRTST
$PBKUP
$PREET
$PXBZZ
$PTFLG
```

NOTE: If after step 32 the PU VALVE VOLTAGE remained out of tolerance, an error message APG4 will be redisplayed. If corrective action cannot be taken request the continue option ($PRSUM).

6.69 Enter $PRSUM and observe the following message:

```
VALVE MOVEMENT TEST PRINTOUT
PU RATIO VALVE VOLTAGE (VO) IS X.XXX
   50 SEC PLUS SLEW
BEGIN RANGE TIME T IS HH MM/SS
+1  T1+1    VA = X.XXX  V1 = X.XX
+1  T1+3    VB = X.XXX  V2 = X.XX
+1  T1+5    VC = X.XXX  V3 = X.XX
+1  T1+8    VD = X.XXX  V4 = X.XX
+1  T1+20   VE = X.XXX  V5 = X.XX
+1  T1+50   VF = X.XXX  V6 = X.XX
```

REVISIONS			
SYM	DESCRIPTION	DATE	APPROVAL

```
        50 SEC MINUS SLEW
BEGIN RANGE TIME T IS HH MM/SS

-1   T2+1     VA = X.XXX    V1 = 0.00
-1   T2+3     VB = X.XXX    V2 = 0.00
-1   T2+5     VC = X.XXX    V3 = 0.00
-1   T2+8     VD = X.XXX    V4 = 0.00
-1   T2+20    VE = X.XXX    V5 = 0.00
-1   T2+50    VF = X.XXX    V6 = 0.00
XXXXXXXXXXXXXXXXXXXXXXXXXXXXXXXXXXXXXX

VEHICLE DISCRETES +MDOS CANNOT BE ISSUED
     0584 NOFF
END OF PU VALVE MOVEMENT TEST
    VERIFY VALVE MOVEMENT RESPONSE IS WITHIN TOLERANCE
TURN OFF STRIP CHART RECORDER BEFORE CONTINUING
AUTOMATIC TEST PROGRAM
POINT ASC2
OPTION ENTRIES
$PRSUM
$PRTST
$PBKUP
$PREET
$PXBZZ
$PTFLG
```

6.70 Place the VALVE POS ERROR SIGNAL switch (S5) on the S-IVB Propellant Utilization Panel to the INCREASE position.

6.71 Enter $PRTST and observe the following message:

```
        OPTION RTST BEING EXECUTED
XXXXXXXXXXXXXXXXXXXXXXXXXXXXXXXXXXXXXXX
VEHICLE DISCRETES +MDOS CANNOT BE ISSUED
        0585 NOFF

VALVE MOVEMENT TEST PRINTOUT
PU RATIO VALVE VOLTAGE (VO) IS X.XXX
        50 SEC PLUS SLEW
BEGIN RANGE TIME T IS HH MM/SS
+1   T1+1     VA = X.XXX    V1 = 0.00
+1   T1+3     VB = X.XXX    V2 = 0.00
+1   T1+5     VC = X.XXX    V3 = 0.00
+1   T1+8     VD = X.XXX    V4 = 0.00
+1   T1+20    VE = X.XXX    V5 = 0.00
+1   T1+50    VF = X.XXX    V6 = 0.00
        50 SEC MINUE SLEW
BEGIN RANGE TIME T IS HH MM/SS

-1   T2+1     VA = X.XXX    V1 = X.XX
-1   T2+3     VB = X.XXX    V2 = X.XX
-1   T2+5     VC = X.XXX    V3 = X.XX
-1   T2+8     VD = X.XXX    V4 = X.XX
```

REVISIONS			
SYM	DESCRIPTION	DATE	APPROVAL

```
-1   T2+20   VE = X.XXX     V5 = X.XX
-1   T2+50   VF = X.XXX     V6 = X.XX

END OF PU VALVE MOVEMENT TEST
  VERIFY VALVE MOVEMENT RESPONSE IS WITHIN TOLERANCE.
TURN OFF STRIP CHART RECORDER BEFORE CONTINUING
AUTOMATIC TEST PROGRAM
POINT ASC2
OPTION ENTRIES
$PRSUM
$PRTST
$PBKUP
$PREET
$PXBZZ
$PTFLG
```

6.72 Enter $PRSUM and observe the following message:

```
OPTION RSUM BEING EXECUTED

RATIO VALVE VOLT INVALID REF. SERVO
BALANCED BRIDGE GAIN TEST
POINT  ASF4
OPTION ENTRIES
$PRSUM
$PRTST
$PBKUP
$PREET
$PXBZZ
$PTFLG
```

6.73 Place the Switch Selector Inhibit switch (S22) on the S-IVB Networks Panel to the ON position.

6.74 Enter $PRSUM and observe the following message:

```
OPTION RSUM BEING EXECUTED

PU ACTIVATE TEST
A.  STRIP CHART RECORD PU SYSTEM
B.  TURN ON STRIP CHART RECORDER
    RATIO VLV DP1B0-22-10 POSITION
    BEFORE CONTINUING AUTOMATIC TEST
    PROGRAM
POINT ASH2
OPTION ENTRIES
$PRSUM
$PRTST
$PBKUP
$PREET
$PXBZZ
$PTFLG
```

REVISIONS			
SYM	DESCRIPTION	DATE	APPROVAL

6.75 Place the LCC IU DDAS in the SIMULATE mode with address DP1B0-22-10 set to all ones (5.12 volts).

6.76 Enter $PRSUM and observe the following message:

OPTION RSUM BEING EXECUTED

PU ACTIVATE ON GMT HH MM/SS
PU SYS RATIO VALVE VOLTAGE OUT OF TOLERANCE
(5.120) OR DDAS CHAN DP1B0-22-10 MALF
POINT ASJ4
OPTION ENTRIES
$PRSUM
$PRTST
$PBKUP
$PREET
$PXBZZ
$PTFLG

6.77 Simulate all LCC IU addresses all ones (5.12 volts).

6.78 Enter $PRSUM and observe the following message:

OPTION RSUM BEING EXECUTED

PU LOX COARSE MASS VOLTAGE OUT OF TOLERANCE
(X.XXX) OR CHAN DP1B0-22-04 MALF
POINT ATH3
OPTION ENTRIES
$PRSUM
$PRTST
$PBKUP
$PREET
$PXBZZ
$PTFLG

6.79 Enter $PRSUM and observe the following message:

OPTION RSUM BEING EXECUTED

SWITCH SELECTOR ERROR CODE 0005
SIV SS CHAN 0005 NOT ISSUED - HARDWARE INHIBITED
PU ACTIVATE IND NOT ON
POINT AUC3
OPTION ENTRIES
$PRSUM
$PRTST
$PBKUP
$PREET
$PXBZZ
$PTFLG

6.80 Place the Switch Selector INHIBIT switch (S22) on the S-IVB Networks Panel to the OFF position.

REVISIONS			
SYM	DESCRIPTION	DATE	APPROVAL

6.81 Enter $PRTST and observe the following message:

OPTION RTST BEING EXECUTED

PU SYS RATIO VALVE VOLT OUT OF TOLERANCE
(5.XXX) OR DDAS CHAN DP1BO-22-10 MALF
POINT AUF3
OPTION ENTRIES
$PRSUM
$PRTST
$PBKUP
$PREET
$PXBZZ
$PTFLG

6.82 Inhibit the S-IVB stage switch selector.

6.83 Enter $PRSUM and observe the following message:

OPTION RSUM BEING EXECUTED

SWITCH SELECTOR ERROR CODE 0005
S-IV SS CHAN 0006 NOT ISSUED - HARDWARE INHIBITED
PU ACTIVATE IND NOT OFF
POINT AUJ3
OPTION ENTRIES
$PRSUM
$PRTST
$PBKUP
$PREET
$PXBZZ
$PTFLG

6.84 Simulate all LCC IU DDAS addresses to zero volts and release the S-IVB stage switch selector inhibit.

6.85 Enter $PRTST and observe the following message:

OPTION RTST BEING EXECUTED

PU ACTIVATE OFF GMT HH MM/SS
(X.XXX) OR DDAS CHAN DP1BO-22-10 MALF
POINT AVD3
OPTION ENTRIES
$PRSUM
$PRTST
$PBKUP
$PREET
$PXBZZ
$PTLFG

6.86 Simulate all IU LCC DDAS addresses to all ones

REVISIONS			
SYM	DESCRIPTION	DATE	APPROVAL

6.87 Enter $PRSUM and observe the following message:

```
OPTION RSUM BEING EXECUTED

PU LOX COARSE MASS VOLTAGE OUT OF TOLERANCE
(X.XXX) OR CHAN DP1B0-22-04 MALF
POINT AVJ3
OPTION ENTRIES
$PRSUM
$PRTST
$PBKUP
$PREET
$PXBZZ
$PTFLG
```

6.88 Enter $PRSUM and observe the following message:

```
OPTION RSUM BEING EXECUTED

PU SYS RATIO VALVE VOLTAGE OUT OF TOLERANCE
(X.XXX) OR DDAS CHAN DP1B0-22-10 MALF
POINT AWC4
OPTION ENTRIES
$PRSUM
$PRTST
$PBKUP
$PREET
$PXBZZ
$PTFLG
```

6.89 Enter $PRSUM and observe the following message:

```
OPTION RSUM BEING EXECUTED

PU ACTIVATE OFF GMT HH MM/SS
END OF PU ACTIVATE TEST
    TURN OFF STRIP CHART RECORDER BEFORE
    CONTINUING AUTOMATIC TEST PROGRAM
POINT AWE2
OPTION ENTRIES
$PRSUM
$PRTST
$PBKUP
$PREET
$PXBZZ
$PTFLG
```

6.90 Place the SWITCH SELECTOR INHIBIT switch (S22) on the S-IVB Networks Panel to the ON position.

6.91 Return the LCC IU DDAS to the RECEIVE mode.

REVISIONS			
SYM	DESCRIPTION	DATE	APPROVAL

6.92 Enter $P1B08 and observe the following message:

FLAT 08 SET TO THE 1 STATE

6.93 Enter $PRSUM and observe the following message:

OPTION RSUM BEING EXECUTED

OPTION ENTRIES
$PRSUM
$PBKUP
$PREET
$PXBZZ
$PTFLG
POINT B07
$PJPYY

6.94 Enter $PRSUM and observe the following message:

OPTION RSUM BEING EXECUTED

SWITCH SELECTOR ERROR CODE 0005
S-IV SS CHAN 0034 NOT ISSUED - HARDWARE INHIBITED
FUEL BOIL OFF BIAS IND NOT ON
POINT AWF4
OPTION ENTRIES
$PRSUM
$PRTST
$PBKUP
$PREET
$PXBZZ
$PTFLG

6.95 Release the S-IVB switch selector inhibit and issue switch selector channel 035 manually (Fuel BOILOFF BIAS).

6.96 Enter $PBKUP and observe the following message:

OPTION BKUP BEING EXECUTED

OPTION ENTRIES
$PRSUM
$PBKUP
$PREET
$PXBZZ
$PTFLG
POINT B07
$PJPYY

6.97 Enter $P1B04 and observe the following message:

FLAG 04 SET TO THE 1 STATE

REVISIONS			
SYM	DESCRIPTION	DATE	APPROVAL

6.98 Enter $PJP04 and observe the following message:

```
OPTION JP04 BEING EXECUTED

OPTION ENTRIES
$PRSUM
$PBKUP
$PREET
$PXBZZ
$PTFLG
POINT B04
$PJPYY
```

6.99 Place the LOX AUTO C/O TEST switch (S57) on the S-IVB Propellant Utilization Panel to the 1/3 position.

6.100 Enter $PBKUP and observe the following message:

```
OPTION BKUP BEING EXECUTED
XXXXXXXXXXXXXXXXXXXXXXXXXXXXXX
VEHICLE DUSCRETES +MDOS CANNOT BE ISSUED
    586 NOFF
OPTION ENTRIES
$PRSUM
$PBKUP
$PREET
$PXBZZ
$PTFLG
$POINT B03
$PJPYY
```

6.101 Place the LOX AUTO C/O TEST switch (S7) on the S-IVB Propellant Utilization Panel to the AUTO position and place the LOX OVERFILL SIM Switch (S1) and the LH OVERFILL SIM switch (S9) on the S-IVB Propellant Monitor Panel to the ON position.

Enter $TERMPTP4 and observe the following message:

```
THIS COMMAND IS BEING PROCESSED TERMPTP4
XXXXXXXXXXXXXXXXXXXXXXXXXXXXXXXXXXXXXXXXXXXX
VEHICLE DISCRETES +MDOS CANNOT BE ISSUED
      1695 NOFF
XXXXXXXXXXXXXXXXXXXXXXXXXXXXXXXXXXXXXXXXXXXX
VEHICLE DISCRETES +MDOS CANNOT BE ISSUED
      1696 NOFF
END OF PU FORCED TEST END ROUTINE
PU POWER ON TIME HH MM/SS
LOX CYCLE COUNTER X
FUEL CYCLE COUNTER X
PTP4 S-IVB PRP UTL
PROG TERMINATED BY DISPLAY INPUT
```

REVISIONS			
SYM	DESCRIPTION	DATE	APPROVAL

6.102 Place the LOX OVERFILL SIM switch (S1) and the LH OVERFILL SIM switch (S9) on the S-IVB Propellant Monitor Panel to the AUTO position. This completes error condition validation.

6.103 Return System to Operational Status

Insure that all breakout boxes are removed, that all switches are placed in the normal positions and that the DDAS stations are in the receive mode.

7.0 ERROR MESSAGE CATALOG

	ERROR MESSAGE	DEFINITION
7.1	INV-CONV 5V OUT OF TOLERANCE XXX.XXX OR CHANNEL NO. DP1B0-04-02 MALF	Inv/conv 5V is out of tolerance. The program will enter the Option Processor after completing other inv/conv checks. The operator has RTST, RSUM, and standard options.
7.2	INV-CONV 21V OUT OF TOLERANCE XXX.XXX OR CHANNEL NO. DP1B0-04-04 MALF	Inv/conv 21V is out of tolerance. The program will enter the Option Processor after finishing other inv/conv checks. The operator has RTST, RSUM, and standard options.
7.3	INV-CONV 115 VAC IS OUT OF TOLERANCE XXX.XXX OR CHANNEL NO. DP1B0-15-09 MALF	Inv/conv 115 Vac is out of tolerance. The program will enter the Option Processor after completing other inv/conv tests. The operator has RTST, RSUM, and standard options.
7.4	INV-CONV 400 CPS OUT OF TOLERANCE XXX.XXX OR CHANNEL NO. DP1B0-04-03	Inv/conv 400 cps is out of tolerance. The program will enter the Option Processor after completing other inv/conv checks. The operator has RTST, RSUM, and standard options.
7.5	LH2 FASTFILL C/O IND NOT OFF	The program is in the Forced Test End routine (FTER). The program will display the message and continue FTER.

REVISIONS			
SYM	DESCRIPTION	DATE	APPROVAL

7.6	LH2 FASTFILL C/O SIM WET COMD NOT OFF	Program BKUP from B06 B05. The program failed to issue command off, and will display the message and exit to B05 after completing BKUP.
7.7	LH2 OVERFILL SNSR WET SIM ON CMD NOT OFF	Program BKUP from B06 B05. The program failed to issue command off, and will display the message and exit to B05 after completing BKUP.
7.8	LH2 TANK FASTFILL INDICATOR IS NOT ON	Discrete MDI indication of malfunction during the Servo Balanced Bridge Gain test. The program displays the message and enters the Option Processor. The operator has RTST, RSUM, and standard options.
7.9	LH2 TANK FASTFILL IND NOT OFF	Discrete MDI indication of malfunction during the Servo Balanced Bridge Gain test. The program displays the message and enters the option processor. The operator has RTST, RSUM, and standard options.
7.10	LH2 TANK FASTFILL IND NOT ON	Discrete MDI indication of malfunction during the Servo Balanced Bridge Gain test. The program displays the message and enters the option processor. The operator has RTST, RSUM, and standard options.
7.11	LH2 TANK NOT OVERFILLED INDICATOR IS NOT ON	The program is in the Forced Test End routine (FTER), and will display this message and continue FTER.
7.12	LH2 TANK OVERFILLED INDICATOR IS NOT OFF	Discrete MDI indicator of malfunction during the Servo Balanced Bridge test. The program displays and enters the Option Processor ALF3. The operator has RTST, RSUM, and standard options.
7.13	LH2 TANK OVERFILLED INDICATOR IS NOT ON	Discrete MDI indication of malfunction during the Servo Balanced Bridge Gain test. The program displays the message and enters the Option Processor.

REVISIONS			
SYM	DESCRIPTION	DATE	APPROVAL

		The operator has RTST, RSUM, and standard options.
7.14	LOX FASTFILL C/O IND NOT OFF	The program is in the Forced Test End routine (FTER), and will display this message and continue FTER.
7.15	LOX FASTFILL C/O SIM WET IND OFF	Program BKUP from B06 B05. The program failed to issue command off, and will display the message and exit to B05 after completing BKUP.
7.16	LOX TANK NOT OVERFILLED INDICATOR IS NOT ON	The program is in the Forced Test End routine (FTER), and will display this message and continue FTER.
7.17	LOX NOT OVERFILL SNSR WET IND NOT ON	Program BKUP from B06 B05. The program failed to issue command off, and will display the message and exit to B05 after completing BKUP.
7.18	LOX TANK FASTFILL INDICATOR IS NOT OFF	Discrete MDI indication of malfunction during the Servo Balanced Bridge Gain test. The program displays the message and enters the Option Processor. The operator has RTST, RSUM, and standard options.
7.19	LOX TANK FASTFILL INDICATOR IS NOT ON	Discrete MDI indication of malfunction during the Servo Balanced Bridge Gain test. The program displays the message and enters the Option Processor. The operator has RTST, RSUM, and standard options.
7.20	LOX TANK NOT OVERFILLED INDICATOR IS NOT OFF	Discrete MDI indication of malfunction during the Servo Balanced Bridge Gain test. The program displays the message and enters the Option Processor. The Operator has RTST, RSUM, and standard options.

REVISIONS			
SYM	DESCRIPTION	DATE	APPROVAL

7.21	LOX TANK NOT OVERFILLED INDICATOR IS NOT ON	Discrete MDI indication of malfunction during the Servo Balanced Bridge Gain test. The program displays the message and enters the Option Processor. The operator has RTST, RSUM, and standard options.

8.0 PROGRAM OPTIONS

8.1 Purpose

This program determines the operational status of the S-IVB Stage Propellant Utilization (PU) Subsystem. The test is divided into four subtests, and offers several intermediate optional stops which permit flexible testing.

8.2 Constraints

Prior to calling this program, the following conditions must be established.

8.2.1 S-IVB Stage, Stage Switch Selector, ESE, and IU need to be operational.

8.2.2 Turn on PU Subsystem Oven Power 45 minutes prior to Execution Time, using S-IVB Switch Selector Channel 7.

NOTE: Switches and indicators should be set on S-IVB ESE panels as follows:

Switch	Position
Valve Test Enable	Off
Ratio Valve Test Increase	Off
Ratio Valve Test Decrease	Off
4D119 Bus Power	On
S-IVB Power	On
PU Activate	Off
DDAS Power	On
Sequencer Power	On
S-IVB Power Transfer Test	On
LOX Load Test 1/3	Off
LOX Load Test 2/3	Off
LH2 Load Test 1/3	Off
LH2 Load Test 2/3	Off
PU Loading Enable	Off
LH2 Tank Overfill Sensor Wet	Off
LOX Tank Overfill Sensor Wet	Off
LH2 Tank Fastfill Sensor Wet	Off
LOX Tank Fastfill Sensor Wet	Off

REVISIONS			
SYM	DESCRIPTION	DATE	APPROVAL

8.2.3 Use

a. Card Keys: 10 and 11
b. Call-Up: $TPRQPTP4
c. Execute: $PX
d. Options: See Table 1
e. Terminate: $TERMPTP4
(See option $PENDT in Table 1)

REVISIONS			
SYM	DESCRIPTION	DATE	APPROVAL

TABLE 1

ENTRY	FUNCTION
$PRSUM	Resume Option: Allows test resumption despite any prevailing error conditions.
$PRTST	Retest Option: Allows repetition on the preceding sequence of operations. If an error message preceeded the option message, it will be displayed again unless the error condition has been corrected.
$PBKUP	Backup Option: Reestablishes the test conditions which existed at the previous breakout point (BO) and begins to run from that point, unless the flag has been set at that point.
$PREET	Reinitialize Option: Executes all backup routines in sequence until the first options are redisplayed.
$PJPYY	Jump Option: Where YY is a legal BO number, this option establishes the selected BO conditions. It may be used to bypass certain BO's when at a BO stop with no error conditions present.
$PXBZZ	Breakout Point (BO) Option: Where X is replaced by 1 when BO is to be set or 0 when cleared, and where ZZ is BO number 01 to 08, the test stops at flags set by this option. To continue, one of the other displayed options is entered.
$PTFLG	Test Flag Option: Indicates the status of all flags, as shown in the following sample message: FLAG 02 SET TO THE 1 STATE FLAG 03 SET TO THE 1 STATE FLAG 04 SET TO THE 0 STATE FLAG 05 SET TO THE 1 STATE FLAG 06 SET TO THE 0 STATE FLAG 07 SET TO THE 1 STATE FLAG 08 SET TO THE 1 STATE
$PENDT	Special Terminate Option: Ends PTP4 immediately after executing the PU Power On test, but does not execute forced test end routines. Specified system configurations are not altered.
$PRDCD	Read Card Option: Allows a predefined number of data cards to be read to update the ratio valve voltage table.

REVISIONS			
SYM	DESCRIPTION	DATE	APPROVAL

FUNCTIONAL BLOCK DIAGRAM (OPTIONS)

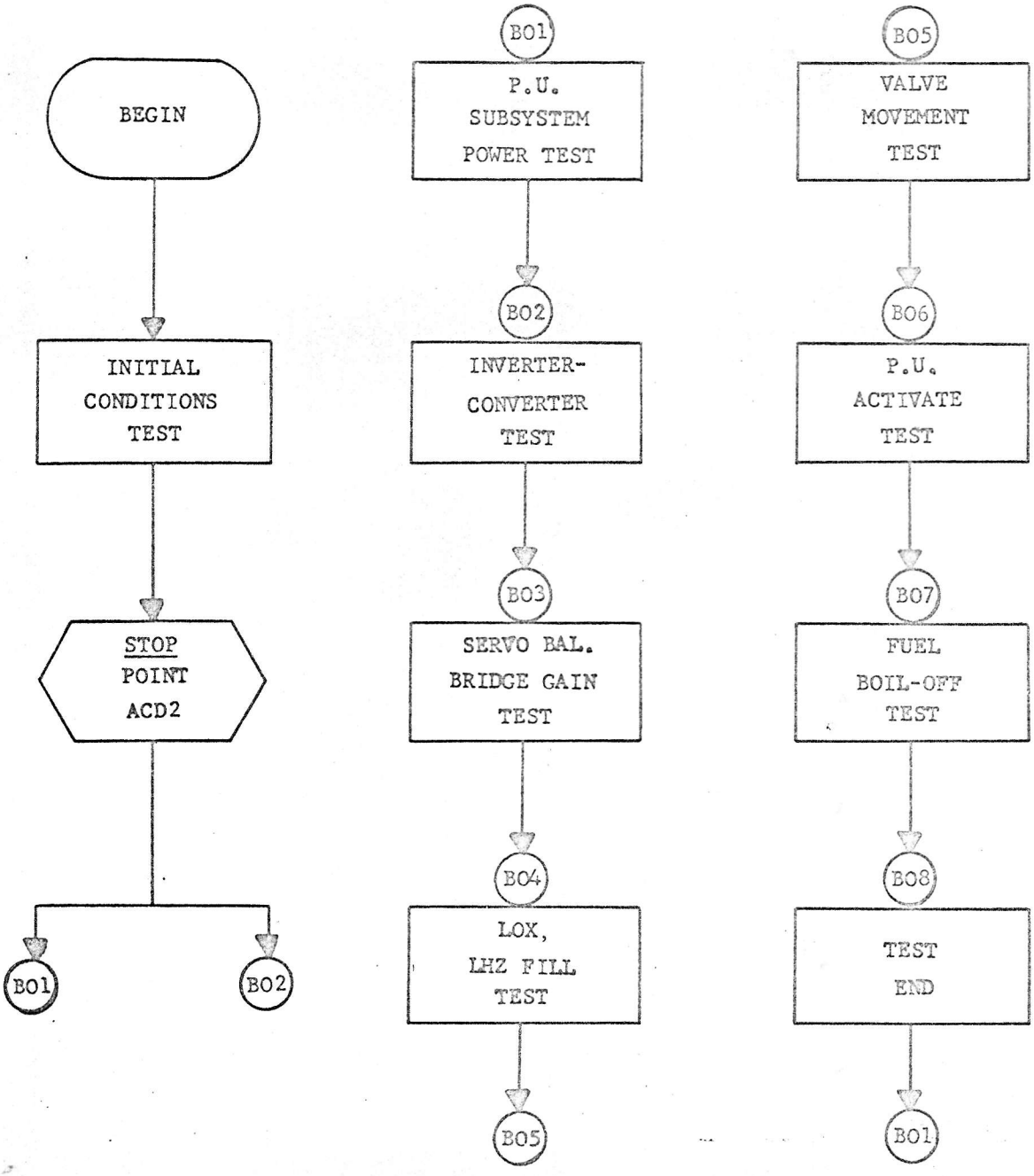

CODE IDENT NO	DWG SIZE	73V1805
	A	SHEET 30 of 30