For
Sam Greenberg
Consultant Pilot
Dept 707 Chart 39
Send to:
Scott MacLeod

APOLLO

CSM 104

SM2A-03-SC104-(2)

APOLLO OPERATIONS HANDBOOK

COMMAND AND SERVICE MODULES

Volume 2 / Operational Procedures

Prepared under direction of

THE NATIONAL AERONAUTICS AND SPACE ADMINISTRATION

SPACECRAFT SYSTEMS BRANCH / FLIGHT CREW SUPPORT DIVISION

SD 67-779

SM2A-03-SC104-(2)

APOLLO

CSM 104

APOLLO OPERATIONS HANDBOOK

COMMAND AND SERVICE MODULES

Volume 2
Operational Procedures

Contract NAS 9-150
EXHIBIT I, PARAGRAPH 10.3

Published under authority of
THE NATIONAL AERONAUTICS AND SPACE ADMINISTRATION
SPACECRAFT SYSTEMS BRANCH/FLIGHT CREW SUPPORT DIVISION

SD 67-779 15 MAY 1968

LIST OF EFFECTIVE PAGES

INSERT LATEST CHANGED PAGES. DESTROY SUPERSEDED PAGES.

NOTE: The portion of the text affected by the changes is indicated by a vertical line in the outer margins of the page.

TOTAL NUMBER OF PAGES IN THIS PUBLICATION IS 530 CONSISTING OF THE FOLLOWING:

Page	Issue
Title	Basic
A	Basic
i thru x	Basic
4-1 thru 4-448	Basic
5-1 thru 5-56	Basic
B-1 thru B-8	Basic
C-1 thru C-6	Basic

*The asterisk indicates pages changed, added, or deleted by the current change.

Manuals will be distributed as directed by the NASA Apollo Project Office. All requests for manuals should be directed to the NASA Apollo Spacecraft Project Office at Houston, Texas.

TABLE OF CONTENTS

FOREWORD

This handbook contains the flight crew operational procedures for Command Service Module 104. A volume 2 of the Apollo Operations Handbook is prepared for each Apollo manned spacecraft.

Volume 2 constitutes the crew Normal/Backup, Abort, Malfunction, and Emergency procedures. Normal procedures are defined as those used if all systems are operating normally. Backup procedures are those used to accomplish the objective of the normal procedures when system failure or some other anomaly prevents use of the normal procedures. Malfunction and Emergency procedures encompass the recognition, diagnosis, and corrective action for system malfunctions or failure.

Volume 1 - Spacecraft Description (SM2A-03-BLOCK II-(1)), is bound separately and contains the description portion of the spacecraft systems and equipment.

Comments or suggested changes to this handbook should be addressed to the Spacecraft Systems Branch, FCSD, MSC, Office Code CF22, Telephone HU3-5558.

SECTION 4

NORMAL/BACKUP PROCEDURES

INTRODUCTION

Procedural steps in this section are presented in tabular form and in numerical sequence. Steps are further organized by subgroups into related functions. Column headings of the Normal/Backup procedures consist of STATION/TIME (STA/T), STEP, PROCEDURE, PANEL and REMARKS. An explanation of each of these column headings is provided as follows:

STA/T — The station is equivalent to the crewmember assigned to the spacecraft location where a procedure or step is performed. Station CDR (commander), CMP (command module pilot) and LMP (lunar module pilot) correspond to the left, middle, and right crew couch positions, respectively. The CMP also pertains to the lower equipment bays inaccessible to the other crewmembers. The time column (T) will contain mission time, event time or altitudes.

STEP — The step is the numerical indication of the elements to be followed and their sequence in performing a complete procedure.

PROCEDURE — The procedure is a group of steps or overall task involved in performing a complete function or operation. If a perimeter of Xs are around a procedure, it constitutes a backup procedure relative to the preceding step.

PANEL — The panel location is the location of a particular control or display by panel number. The main display console (MDC) panels are numbered 1 through 12; the lower equipment bay (LEB), 100 through 164; the righthand equipment bay (RHEB), 225 through 278; the left hand equipment bay (LHEB), 325 through 382; the left hand forward equipment bay (LHFEB), 300 through 306; and the upper equipment bay (UEB), 600 through 602. (See figures B-1 and B-2 for panel locations.)

REMARKS

This column provides the rationale supporting the adjacent step and the operational procedure. Rationale will grow in scope as the operational procedures are refined through continued application by the Flight Crew as applied during mission simulation using Apollo evaluators and simulators. As the Flight Crew becomes more familiar with the spacecraft and increases their proficiency, the Abbreviated Checklist is expected to diminish in overall coverage. Volume 2, however, with its supporting rationale will become a repository of comprehensive data providing a reference baseline to the Flight Crew Abbreviated Checklist and for support personnel use.

Spacecraft controls and displays and their relative positions and indications are called out by their respective placard titles. Exceptions have been taken, where titles are lengthy by adoption of short-form nomenclature.

Whenever a designated callout refers to a control or display, they are identified by the following:

Light	lt
Switch	sw
Rotary type switch	sel
Circuit breaker	cb
Talkback indicator	tb
Valve	vlv
Indicator	ind
Push button	pb
Potentiometer or rheostat	cont
Thumbwheel	tw

For symbols and definitions, refer to Appendix A in the Apollo Operations Handbook, Block II Spacecraft, Volume 1 - Spacecraft Description (SM2A-03-BLOCK II-(1)).

STA/T	STEP	PROCEDURE	PANEL	REMARKS
	4.1	BACKUP CREW PRELAUNCH CHECKS		
		Prelaunch procedures consist of the operational and configuration checks performed by backup flight crew prior to ingress of the prime crew. It is assumed that a complete prelaunch checkout, including loose gear stowage, has been performed by ground support personnel, prior to backup crew ingress into the command module, and that all systems are in an active configuration as required at the time of ingress. The spacecraft suit circuit shall have been purged and oxygen content verified to be 95% minimum. The DIRECT O2 valve shall remain partially open subsequent to the suit circuit purge to assure positive suit-to-cabin ΔP. The suit flow valves (3) are in the SUIT FULL FLOW position and the SUIT CKT RET VLV is closed.		
	4.1.1	INGRESS AND STATUS CHECKS		
	1	Verify/set controls		
CDR		SECS PYRO ARM (2) - SAFE	8	Lever-lock with key locked guard.
CMP		CSM/LM FINAL SEP (both) - off (down)	2	Guarded.
		CM/SM SEP (both) - off (down)		Guarded.
		SIVB/LM SEP - off (down)		Guarded.
ALL		PWR (3) - OFF	9,10,6	
		SUIT PWR (3) - OFF		
CMP		PL VENT VLV UNLOCK - push (lock)	2	
ALL	2	Connect comm control head to CWG adapter (3)		
	3	Audio Panel Intercom Check		
		MODE (3) - INTERCOM/PTT	9,10,6	
		VOX SENS tw (3) - TBD		
		S BD (3) - T/R		
		S BD VOL tw (3) - TBD		

BACKUP CREW PRELAUNCH CHECKS

STA/T	STEP	PROCEDURE	PANEL	REMARKS
ALL		PWR (3) - AUDIO/TONE	9,10,6	
		MASTER VOL tw (3) - TBD		
		INTERCOM (3) - T/R		Establishes ground communications (hardline) plus SC intercommunications.
		INTERCOM VOL tw (3) - TBD		
		VHF AM (3) - T/R		
		VHF AM VOL tw (3) - TBD		
		AUDIO CONT (3) - NORM		
		SUIT PWR (3) - on (up)		
		PAD COMM (3) - T/R		
		PAD COMM VOL tw (3) - TBD		
	4	C&WS Status Check		
CMP		C/W NORM - NORMAL	2	
		C/W CSM - CSM		
		C/W PWR - 2		
ALL		MASTER ALARM pb/lt (3) - on, push	1,3,122	
CMP		C/W PWR - 1	2	
ALL		MASTER ALARM pb/lt (3) - on, push	1,3,122	
CMP		C/W LAMP TEST - 1	2	1 position is momentary.
CDR		MASTER ALARM pb/lt - on	1	
CMP		LH C/W lt (16) - on	2	
		C/W NORM - BOOST		
CDR		MASTER ALARM pb/lt - off	1	
CMP		C/W NORM - NORMAL	2	
CDR		MASTER ALARM pb/lt - on	1	
CMP		C/W LAMP TEST - 2	2	2 position is momentary.
CDR		MASTER ALARM pb/lt - off	1	
CMP		LH C/W lt (16) - off	2	
LMP		MASTER ALARM pb/lt - on	3	

BACKUP CREW PRELAUNCH CHECKS

STA/T	STEP	PROCEDURE	PANEL	REMARKS
CMP		RH C/W lt (23) - on	2	
		C/W LAMP TEST - off (center)		
LMP		MASTER ALARM pb/lt - off	3	
CMP		RH C/W lt (22) - off	2	SUIT COMPR C/W light will remain on until compressor is activated.
		C/W NORM - BOOST		Inhibits master alarm light on MDC-1.
	5	ECS Valve Status Check		
CDR		REPRESS O2 VLV - CLOSE	601	Guarded.
LMP		EMER O2 VLV - CLOSE	600	
		REPRESS O2 ind - 865-935 psia	602	
		REPRESS O2 RELF vlv - OPEN (CW)		
CDR		SURGE TK PRESS RELF vlv - AUTO	375	
		PLVC - NORMAL	376	
		O2 DEMAND REG vlv - BOTH	380	
		SUIT TEST vlv - OFF		
		SUIT CKT RET VLV - PUSH TO CLOSE		
		PRIM GLY TO RAD - normal (push)	325	
		CAB PRESS RELF (2) - BOOST		
		ENTRY (safety latch off)		
		GLY RSVR IN vlv - OPEN	326	
		GLY RSVR OUT vlv - OPEN		
		GLY RSVR BYPASS vlv - CLOSE		
		O2 SM SUPPLY vlv - ON		
		O2 SURGE TK vlv - ON		
		Verify CM O2 supply		Includes surge tank and repress/emergency tanks.
		O2 PLSS vlv - FILL		
CMP		O2 PRESS IND sw - SURGE TANK	2	
		CRYO TK 1 O2 PRESS ind - 865-935 psia		Nominal CM O2 supply pressure.
		O2 PRESS IND sw - TANK 1		

BACKUP CREW PRELAUNCH CHECKS

STA/T STEP	PROCEDURE	PANEL	REMARKS
CDR	02 PLSS vlv - OFF	326	
	DIRECT 02 vlv - partially OPEN (CCW)	7	Valve previously adjusted by ground support personnel for 0.2 lb/hr flow (off the peg) to assure suit circuit 02 purity of 95%.
CMP	PRESS EQUAL VLV - CLOSED	Combined hatch	
	LM/CM PRESS vlv - OFF	12	
	LM/CM PRESS DIFF ind - 0.0 psi		
	Cabin ht exch louvers - centered		
	PRIM CAB TEMP vlv - C (CW)	303	
	SEC CAB TEMP vlv - COOL-MAX (CW)		
	DRNK H20 SUPPLY vlv - OFF (CW)	304	Drinking water unavailable during launch hold periods.
	FOOD PREP H20 vlv (2) - rel	305	
	GLY TO RAD SEC vlv - NORMAL	377	
	PRIM ACCUM FILL vlv - OFF	379	
	PRIM GLY ACCUM vlv - on (CCW)	378	
	Open coolant control attenuation panel		Covers panel 382.
	SUIT HT EXCH PRIM GLY vlv - FLOW	382	
	WARNING SUIT FLOW RELF valve must remain OFF throughout mission or swelling of CO2-odor absorber filters may result.		
	SUIT FLOW RELF vlv - OFF		
	PRIM GLY EVAP IN TEMP vlv - MIN		
	SUIT HT EXCH SEC GLY vlv - FLOW		
	EVAP H20 CONT vlv (2) - AUTO		
	H20 ACCUM vlv (both) - RMTE		
	Close coolant control attenuation panel		

BACKUP CREW PRELAUNCH CHECKS

STA/T STEP	PROCEDURE	PANEL	REMARKS
CMP	Open CO2 canister attenuation panel		Covers CO2 canisters.
	CO2 cstr divert vlv - both (center)	350	
	Close CO2 canister attenuation panel		
	MAIN REG vlv (2) - OPEN	351	
	H2O/GLY TK PRESS vlv (2) - BOTH		
	EMER CAB PRESS vlv - OFF		
	CAB REPRESS vlv - close (CCW)		
	WASTE TK SERVICING vlv - CLOSE	352	Servicing fitting is capped.
	PRESS RELF vlv - BOTH		
	POT TK IN vlv - OPEN		Potable water chlorination port capped.
	WASTE TK IN vlv - AUTO		
6	ECS/Cryogenic Status Check		
	SUIT CAB ΔP ind - ____in. H20	2	
	O2 FLOW ind - 0.2 lb/hr (not pegged)		DIRECT O2 valve partially open.
	CRYO TK H2 PRESS ind (both) - 225-260 psia		
	CRYO TK O2 PRESS ind (both) - 865-935 psia		
	CRYO TK H2 QTY ind (both) - 100%		28 lbs nominal at 100 percent (each tank).
	CRYO TK O2 QTY ind (both) - 100%		320 lbs nominal at 100 percent (each tank).
	CAB FAN (both) - on (up)		
	H2 HTRS (both) - AUTO		
	O2 HTRS (both) - AUTO		
	H2 FANS (both) - AUTO		
	O2 FANS (both) - AUTO		
	ECS IND sel - PRIM		
	ECS RAD PRIM IN TEMP ind - 73-110°F		
	ECS RAD PRIM OUT TEMP ind - 30-50°F		
	GLY EVAP PRIM OUT TEMP ind - 30-50°F		
	GLY EVAP PRIM STM PRESS ind - 0.25 psia (pegged)		

BACKUP CREW PRELAUNCH CHECKS

STA/T STEP	PROCEDURE	PANEL	REMARKS
CMP	GLY DISCH PRIM PRESS ind - ____psig	2	
	SUIT TEMP ind - 45-55°F		
	CAB TEMP ind - 70-80°F		
	SUIT PRESS ind - approx 14.9 psia		
	CAB PRESS ind - approx 14.7 psia		
	CO2 PART PRESS ind - 0.0 mm Hg		
	ECS RAD FLOW AUTO CONT - AUTO		
	ECS RAD tb - gray		Gray indicates No. 1 flow proportioning valve controlling flow.
	ECS RAD FLOW PWR CONT - off (center)		
	ECS RAD MAN SEL - RAD 1		When switch is powered, by placing the ECS RAD FLOW PWR CONT switch to MAN SEL MODE, the center position will close all isolation valves.
	ECS RAD PRIM HTR - PRIM 1		
	ECS RAD SEC HTR - OFF		
	SUIT COMPR ΔP ind - 0.0 psi		SUIT COMPR C/W light remains on as long as compressors are not operating.
	ACCUM PRIM QTY ind - ____%		
	H2O QTY IND sw - WASTE		
	H2O QTY ind - ____%		
	H2O QTY IND sw - POT		
	H2O QTY ind - ____%		
	POT H2O HTR - OFF		
	SUIT CKT H2O ACCUM AUTO - center		
	SUIT CKT HEAT EXCH - ON		
	SEC COOL LOOP EVAP - RESET for 45 sec min, then off (center)		Assures secondary loop steam pressure valve is closed.
	SEC COOL LOOP PUMP - off (center)		
	GLY EVAP IN TEMP - MAN		

BACKUP CREW PRELAUNCH CHECKS

STA/T	STEP	PROCEDURE	PANEL	REMARKS
CMP		Position prim loop steam press valve GLY EVAP STM PRESS AUTO - MAN GLY EVAP STM PRESS INCR - INCR for 45 sec min, then DECR for 8.5±0.5 sec GLY EVAP H20 FLOW - off (center) CAB TEMP - MAN CAB AUTO TEMP tw - max decr	2	INCR and DECR positions are momentary. Steam pressure valve requires 36 seconds from full close to full open.
LMP	7	EPS Status Checks		
		FC RAD (all) - NORMAL	3	NORMAL position is momentary.
		FC RAD tb (all) - gray		Gray indicates FC radiator panels are not bypassing flow.
		FC HTRS (all) - on (up) FC PURG (all) - OFF FC REACS (all) - on (up)		On position is momentary.
		FC REACS tb (all) - gray		Gray indicates FC reactants valves are open.
		FC MN BUS A (3) - 1 & 2 center, 3 OFF FC MN BUS A tb (3) - 1 & 2 gray, 3 bp		Gray indicates FC connected to bus, barber pole indicates FC disconnected from bus.
		MN BUS A RSET - RESET		RESET position is momentary.
		FC MN BUS B (3) - 1 OFF, 2 & 3 center FC MN BUS B tb (3) - 1 bp, 2 & 3 gray		Gray indicates FC connected to bus, barber pole indicates FC disconnected from bus.
		MN BUS B RSET - RESET		RESET position is momentary.
		FC IND sel - 1, 2, 3 FC H2 FLOW ind - 0.01-0.05 lb/hr FC O2 FLOW ind - 0.10-0.40 lb/hr		Flow limits are proportional to individual FC currents and can be approximated by FC H2 Flow ≈ (amps x 2.5)/1000, and FC O2 Flow ≈ (amps x 2.0)/100. GSE is supplying most of spacecraft power.

BACKUP CREW PRELAUNCH CHECKS

STA/T STEP	PROCEDURE	PANEL	REMARKS
LMP	FC MOD SKIN TEMP ind - 390-450°F FC MOD COND EXH TEMP ind - 150-175°F FC tb (2) - gray	3	Gray displays indicate normal pH factor and normal FC radiator temperature.
	BAT CHARGE - OFF DC IND sel - FUEL CELL 1, 2, 3 DC AMPS ind - 5-20 amps DC IND sel - MAIN BUS A, B DC VOLTS ind - 26.5-31 vdc DC IND sel - BAT BUS A, B, BAT C DC VOLTS ind - 35-37.5 vdc DC AMPS ind - <3.0 amps DC IND sel - PYRO BAT A, B DC VOLTS ind - 36.0-37.5 vdc DC IND sel - MAIN BUS A		
	a Dual Inverter Status Check AC INV 1 - MNA AC INV 2 - MNB AC INV 3 - OFF AC INV 1 AC BUS 1 - on (up) AC INV 2 AC BUS 1 - OFF AC INV 3 AC BUS 1 - OFF AC INV 1 AC BUS 2 - OFF AC INV 2 AC BUS 2 - on (up) AC INV 3 AC BUS 2 - OFF AC IND sel - BUS 1 & 2, ϕ A, B, C AC VOLTS ind - 113-117 vac		
	b Standby Inverter (No. 3) Check AC BUS 2 RSET - OFF AC INV 3 - MNB AC INV 2 AC BUS 2 - OFF AC INV 3 AC BUS 2 - on (up)		

BACKUP CREW PRELAUNCH CHECKS

STA/T	STEP	PROCEDURE	PANEL	REMARKS
LMP		AC BUS 2 RSET - RESET	3	RESET position is momentary. Positioning AC BUS 1 or 2 RSET switches to RESET ensures a MASTER ALARM light and tone. Positioning AC BUS 1 or 2 RSET switches to on will cause random activation of MASTER ALARM lights and tone.
ALL		MASTER ALARM pb/lt (2) - on (push)	3,122	
CMP		C/W lts (38) - off	2	SUIT COMPR C/W light will remain on until compressor is activated.
LMP		AC IND sel - BUS 2, ϕA, B, C AC VOLTS ind - 113-117 vac AC BUS 2 RSET - OFF AC INV 3 AC BUS 2 - OFF AC INV 2 AC BUS 2 - on (up) AC BUS 2 RSET - RESET	3	RESET position is momentary. Positioning AC BUS 1 or 2 RSET switches to RESET ensures a MASTER ALARM light and tone. Positioning AC BUS 1 or 2 RSET switches to on will cause random activation of MASTER ALARM lights and tone.
ALL		MASTER ALARM pb/lt (2) - on (push)	3,122	
CMP		C/W lts (38) - off	2	SUIT COMPR C/W light will remain on until compressor is activated.
LMP		AC INV 3 - OFF AC IND sel - BUS 1 & 2, ϕA, B, C AC VOLTS ind - 113-117 vac	3	Inverter 1 powering a-c bus No. 1 and inverter 2 powering a-c bus No. 2.

BACKUP CREW PRELAUNCH CHECKS

STA/T	STEP	PROCEDURE	PANEL	REMARKS
	8	SPS Status Checks		
LMP		SPS PRPLNT TK TEMP ind - 100°F max	3	Normal operating temperature is +45 to +75°F. Redline is +27 and +100°F.
		SPS PRPLNT TK FUEL PRESS ind - 170-195 psia		Normal operating pressure after fuel and oxidizer tank is pressurized with He (after He valve is actuated) is 170-195 psia. GSE servicing pressure is 110 psia.
		SPS PRPLNT TK OXID PRESS ind - 170-195 psia		
		SPS PRESS IND sw - He, N2A, N2B		
		SPS PRPLNT TK He PRESS ind - 3300-3900 psia		GSE servicing pressure is 3600±50 psia.
		SPS PRPLNT TK N2 PRESS ind - 2200-2800 psia		
		SPS ENG INJ VLV ind (4) - CLOSE		
		OXID FLOW VLV tb (2) - gray		Gray indicates propellant utilization valve positioned for normal flow.
		OXID FLOW VLV INCR - NORM		
		OXID FLOW VLV PRIM - PRIM		
		PUG MODE - NORM		
		SPS He VLV tb (both) - bp		Barber pole indicates both helium isolation valves are closed.
		SPS He VLV (both) - AUTO		
		SPS LINE HTRS - OFF		
		SPS PRESS IND sw - He		
	9	RCS Status Check		
CMP		SM RCS He 1 tb (4) - bp	2	Barber pole indicates helium isolation valves for system 1 are closed.
		SM RCS He 2 tb (4) - bp		Barber pole indicates helium isolation valves for system 2 are closed.

BACKUP CREW PRELAUNCH CHECKS

STA/T STEP	PROCEDURE	PANEL	REMARKS
CMP	SM RCS PRIM PRPLNT tb (4) - bp	2	Barber pole indicates at least one primary propellant isolation valve (fuel or oxidizer) in each quad is closed.
	SM RCS SEC PRPLNT tb (4) - bp		Barber pole indicates at least one secondary propellant isolation valve (fuel or oxidizer) in each quad is closed.
	RCS IND sel - SM A, B, C, D SM RCS PKG TEMP ind - amb		Operational SM RCS package temperature is maintained by thermostatically controlled electrical heaters (2). Thermostat control limits of the primary heater are: on 115°F and off 134°F. The secondary heater limits are: on 70°F and off 118°F. Heaters are not operated on the pad and during ascent to reduce the effects of boost heating on the package temperature.
	SM RCS He PRESS ind - 4000-4350 psia		Nominal He load is 4150 psig at 70°F. Pressure and temperature excursions are due to ambient conditions.
	SM RCS SEC FUEL PRESS ind - 192-207 psia SM RCS IND sw - He TK TEMP SM RCS He TK TEMP ind - ____°F SM RCS IND sw - PRPLNT QTY SM RCS PRPLNT QTY ind - 100%		
	CM RCS PRPLNT (both) - on (up)		On position is momentary.
	CM RCS PRPLNT tb (both) - gray		Gray indicates propellant isolation valves are open.
	RCS IND sel - CM 1, CM 2 CM RCS He TEMP ind - 60-90°F CM RCS He PRESS ind - 4000-4450 psia CM RCS MANF PRESS ind - 25-105 psia		Pressure monitored is GSE servicing pressure on fuel and oxidizer tanks. Servicing pressure is 30±2 psia at 68°F. Pressure excursions are a function of temperature and ullage variations.

BACKUP CREW PRELAUNCH CHECKS

STA/T	STEP	PROCEDURE	PANEL	REMARKS
		4.1.2 EMS PRELAUNCH TESTS		
CDR	1	Open EMS GTA cover	1	
	2	GTA - up		The GTA switch is used during ground operations only. Setting the switch on (up) allows EMS calibration for zero g condition. The switch must be set off (down) and door closed before flight.
	3	EMS FUNC - OFF		
		CAUTION If SPS THRUST light comes on, there is a ground on one or both ΔV THRUST switches.		
LMP	4	Verify cb EPS GRP 2 (both) - close	229	
CDR	5	cb EMS (2) - close	8	
	6	EMS MODE - STBY	1	
	7	EMS FUNC - ΔV		
	8	Adjust nomenclature and alphanumeric brightness (option)		
	9	Wait 5 seconds		
	10	EMS MODE - AUTO		

STA/T	STEP	PROCEDURE	PANEL	REMARKS
CDR	11	Adjust EMS GTA null adj until RANGE/ΔV least significant digit changes <1/10 sec	1	
	12	EMS FUNC - ΔV SET		
	13	Slew RANGE/ΔV ind to +1586.8		The ΔV/EMS SET switch is used both for slewing the G-V scroll and for setting the RANGE/ΔV indicator. Slew speeds executed by the ΔV/EMS SET switch are as follows:
	14	EMS FUNC - ΔV TEST SPS THRUST lt - on RANGE/ΔV ind decreases (10 sec) SPS THRUST lt - off (at ΔV -0.1 fps) RANGE/ΔV ind - stops at -20.8±20.7 fps		

	G-V Display Ft/Sec 1827 Ft/Sec = 1 In. of Scroll	RANGE/ΔV Indicator Ft/Sec or Nautical Miles
Slow (soft stop) INCR or DECR	30 ft/sec/sec = 0.0164 in./sec	0.25/sec
Fast (hard stop) INCR or DECR	480 ft/sec/sec = 0.263 in./sec	127.5/sec

For negative numbers the RANGE/ΔV indicator will display a minus sign. No sign will appear for positive numbers.

STA/T	STEP	PROCEDURE	PANEL	REMARKS
CDR	15	EMS MODE - STBY	1	
	16	EMS FUNC - EMS TEST 1 (wait 5 sec)		
	17	EMS MODE - AUTO (wait 10 sec) .05 G lt - off SPS THRUST lt - off RSI lower lt - off RSI upper lt - off RANGE/ΔV ind - 0.0 Slew scroll until display index is superimposed upon notch in the self-test pattern		EMS considered stable after 10 seconds. EMS scroll reverse slew capability is limited to one inch.
	18	EMS FUNC - EMS TEST 2 .05 G lt - on Wait 10 sec All other lt - off		
	19	EMS FUNC - EMS TEST 3 .05 G lt - on (wait 10 sec) RSI upper lt - on Set RANGE/ΔV ind to 58±0.0 NM		
	20	EMS FUNC - EMS TEST 4 .05 G lt - on (all others off) G-V trace within test pattern for 10 sec, then stops in lower right corner RANGE/ΔV ind counts toward zero for 10 sec, then stops at 0.0±0.2		

STA/T	STEP	PROCEDURE	PANEL	REMARKS
CDR	21	EMS FUNC - EMS TEST 5 .05 G lt - on (wait 10 sec) RSI lower lt - on RANGE/ΔV ind - 0.0	1	
	22	Scribe traces vertical line ≈9g to 0.22±0.1g and stops (trace within test pattern)		
	23	EMS FUNC - RNG SET		
	24	EMS MODE - STBY Scribe traces vertical line from 0.22g to 0±0.1g and stops All lt - off		
	25	EMS FUNC - OFF WARNING GTA switch is used for ground tests only and must be set off (down) and door closed for proper flight operation of EMS.		
	26	GTA - down		
	27	Close GTA cover		

BACKUP CREW PRELAUNCH CHECKS

STA/T	STEP	PROCEDURE	PANEL	REMARKS
	4.1.3	ORDEAL PRELAUNCH SWITCH POSITION CHECK		This procedure assumes that the ORDEAL box has been interconnected between the FDAIs and the EDA during installation, and that prime or backup crews will not be required to connect or disconnect ORDEAL cables to stow or unstow ORDEAL.
CDR		EARTH/LUNAR - PWR OFF	13	
		CAUTION Before ORDEAL is stowed, or when not being used (whether EARTH/LUNAR switch in PWR OFF or not), FDAI 1 & 2 switches must be at INRTL. Otherwise, pitch inertial attitude cannot be displayed by FDAI ball.		
		FDAI sw (both) - INRTL ALT SET - TBD LTG - OFF MODE - HOLD/FAST SLEW - off (center)		
	4.1.4	PANEL CONFIGURATION CHECKS		
	4.1.4.1	LH Couch		
	1	THC - LOCKED		It is possible to actuate the THC clockwise or counterclockwise while locked.
	2	RHC - LOCKED		

STA/T	STEP	PROCEDURE	PANEL	REMARKS
CDR	3	MDC Side Panels		
		COAS PWR - OFF	15	
		UTIL PWR - OFF		Connector covered.
		PL BCN LT - off (center)		
		PL DYE MARKER - off (down)		Guarded.
		PL VENT - OFF		
		AUTO RCS SEL (16) - OFF	8	
		cb panel 8 - all closed except		
		cb SECS ARM (2) - open		
		cb SECS LOGIC (2) - open		
		FLOAT BAG (all) - VENT		
		SECS LOGIC (both) - OFF		Lever-lock.
		EDS PWR - OFF	7	
		CAUTION		
		More than 1 hour of continuous on-time for SCS TVC SERVO PWR switches may be detrimental to SPS gimbal actuators.		
		SCS TVC SERVO PWR (both) - OFF		
		FDAI/GPI PWR - BOTH		
		LOGIC 2/3 PWR - on (up)		
		SCS ELEC PWR - GDC/ECA		
		SCS SIG CONDR/DR BIAS (both) - AC1		
		BMAG PWR (both) - WARM UP		
	4	Main Display Console		
		Set altimeter index	1	Value obtained from LCC.
		CMC ATT - IMU		
		Accelerometer - check (+1g)		

BACKUP CREW PRELAUNCH CHECKS

STA/T STEP	PROCEDURE	PANEL	REMARKS
CDR	FDAI SCALE - 5/1	1	
	FDAI SEL - 1/2		
	FDAI SOURCE - CMC		
	ATT SET - GDC		
	FDAI error and rate ind (6) - zero	1,2	
	FDAI (both) - R 163°, P 90°, Y 0°		
	Event Timer - 00:00	1	
	MAN ATT (3) - RATE CMD		
	LIM CYCLE - OFF		
	ATT DBD - MIN		
	RATE - HIGH		
	TRANS CONTR PWR - on (up)		
	RHC PWR NORM (both) - AC/DC		
	RHC PWR DIRECT (both) - OFF		
	SC CONT - SCS		
	CMC MODE - FREE		
	LV/SPS IND α - α		
	LV α/SPS Pc ind - zero		
	LV/SPS IND SII/SIVB - SII/SIVB		
	LV SII FUEL TK PRESS ind (2) - ____		SII fuel tank pressure is displayed until SII/SIVB staging. SIVB OXID tank pressure is displayed after SII/SIVB staging.
	LV SIVB FUEL TK PRESS ind (2) - ____		
	BMAG MODE (3) - RATE 2		
	SPS THRUST - NORMAL		Lever-lock.
	ΔV THRUST (2) - OFF		Guarded.
	SCS TVC (2) - RATE CMD		
	SPS GMBL MOT (4) - OFF		
	ΔV CG - CSM		
	ELS LOGIC - OFF		Guarded.
	ELS AUTO - on (up)		
	CM RCS LOGIC - OFF		

BACKUP CREW PRELAUNCH CHECKS

STA/T STEP	PROCEDURE	PANEL	REMARKS
CDR	CM PRPLNT DUMP - OFF	1	Guarded.
	CM PRPLNT PURG - off (down)		Guarded.
	IMU CAGE - off (down)		Guarded.
	EMS ROLL - OFF		
	.05 G sw - OFF		
	LV/SPS IND SII/SIVB - GPI		
	TVC GMBL DR (2) - AUTO		
	FCSM (2) - RESET/OVERRIDE		
	EVNT TMR STRT - center		
	EVNT TMR RSET - (up, center)		
	4.1.4.2 Center Couch		
CMP	1 RHC - LOCKED		
	2 Main Display Console		
	PROBE EXTD/RETR tb (2) - gray	2	Gray indicates probe fully extended or fully retracted.
	DOCK PROBE (3) - OFF		EXTD/REL switch guarded.
	EXT RUN/EVA LT - OFF		
	EXT RNDZ LT - off (center)		
	TUNL LT - OFF		
	LM PWR - OFF		
	MSN TMR ind - zero		
	MSN TMR - START		Will reset to zero and count up at lift-off, but not abort initiation.
	MSN TMR ind - verify counting up		
	UP TLM CM - TBD		
	UP TLM IU - TBD		
	CM RCS PRESS - off (down)		Guarded.

BACKUP CREW PRELAUNCH CHECKS

STA/T STEP	PROCEDURE	PANEL	REMARKS
CMP	SM RCS HTRS (4) - OFF	2	
	RCS CMD - OFF		OFF position is momentary.
	RCS TRNFR - SM		SM position is momentary.
	EDS AUTO - OFF		
	ABRT SYS PRPLNT - DUMP AUTO		
	ABRT SYS 2 ENG OUT - AUTO		
	ABRT SYS LV RATES - AUTO		
	ABRT SYS TWR JETT (both) - AUTO		Guarded.
	LV GUID - IU		
	LV SII/SIVB - OFF		Guarded.
	LV XLUNAR - INJECT		
	MN REL - off (down)		Guarded.
	HI GAIN ANT TRACK - AUTO		
	HI GAIN ANT BEAM - WIDE		
	HI GAIN ANT PITCH POS - 0°		
	HI GAIN ANT YAW POS - 0°		
	HI GAIN ANT PITCH ind - 0°		
	HI GAIN ANT S BD ANT ind - TBD		
	HI GAIN ANT YAW ind - 0°		
	HI GAIN ANT PWR - OFF		
	HI GAIN ANT SERVO ELEC - PRIM		
4.1.4.3	RH Couch		
1	Main Display Console		
LMP	VHF ANT - SM LEFT	3	
	S BD NORM XPNDR - PRIM		
	S BD NORM PWR AMPL PRIM - PRIM		
	S BD NORM PWR AMPL HI - HIGH		
	PWR AMPL tb - gray (after 90 sec)		Gray indicates power is applied to S-band power amplifier.

STA/T STEP	PROCEDURE	PANEL	REMARKS
LMP	S BD NORM MODE VOICE - VOICE	3	
	S BD NORM MODE PCM - PCM		
	S BD NORM MODE RNG - RANGING		
	S BD AUX TAPE - OFF		
	S BD AUX TV - OFF		
	UP TLM DATA - DATA		
	UP TLM CMD - NORM		
	TAPE MOTION tb - bp		Barber pole indicates no tape motion.
	S BD ANT OMNI A - A		
	S BD ANT OMNI - OMNI		
	VHF AM SQLCH tw (2) - TBD		
	VHF AM A - SIMPLEX		
	VHF AM B - off (center)		
	VHF AM RCV ONLY - off (center)		
	VHF BCN - OFF		
	FC REACS VLV - NORM		
	H2 PURG LINE HTR - OFF		
	TAPE RCDR FWD - REWIND		Allow tape to completely rewind before proceeding. TAPE MOTION tb is gray when tape is in motion.
	TAPE RCDR PCM/ANLG - PCM/ANLG		
	TAPE RCDR RCD - RECORD		Power to switch is provided by the up-data link or the TAPE RCDR FWD switch in the FWD position.
	TAPE RCDR FWD - off (center)		
	SCE PWR - NORM		
	PMP PWR - NORM		
	TLM INPUTS PCM - LOW		
	TLM INPUTS BIOMED - LEFT		

BACKUP CREW PRELAUNCH CHECKS

STA/T	STEP	PROCEDURE	PANEL	REMARKS
	2	MDC Side Panels		
LMP		FC 1 PUMPS - AC1	5	
		FC 2 & 3 PUMPS - AC2		
		G/N PWR - AC1		
		MN BUS TIE (2) - OFF		
		BAT CHGR - AC1		
		NONESS BUS - MN B		
		cb panel 5 - all closed except		
		cb INST SEB (both) - open		
		cb INST SCI EQUIP HATCH - open		
		cb ECS STM/UR DUCT HTR (2) - open		
		SPS GAUGING - AC1	4	
		TELCOM GRP 1 - AC1		
		TELCOM GRP 2 - AC2		
		ECS GLY PUMPS - OFF		
		SUIT COMPR (both) - OFF		
		cb panel 4 - all closed		
		DOCK TRGT - OFF	16	Connector covered.
		UTIL PWR - OFF		Connector covered.
		COAS PWR - OFF		
		cb panel 229 - all closed except	229	
		cb MN REL PYRO (2) - open		
	3	RHEB		
		SCI INST PWR - OFF	227	Connector covered.
		cb panel 275 - all closed except	275	
		cb MNA & B BAT C (2) - open		
		cb FLT/PL BAT BUS A, B, BAT C (3) - open		
		cb panels 276, 277, and 278 - all closed	276,277,278	

BACKUP CREW PRELAUNCH CHECKS

STA/T	STEP	PROCEDURE	PANEL	REMARKS
	4.1.4.4	Equipment Bays		
	1	Fwd Equipment Bay		
CMP		MSN TMR ind - zero	306	
		MSN TMR - START		Mission timer will reset to zero and count up at launch.
		MSN TMR ind - verify counting up		
		EVNT TMR ind - zero		
		EVNT TMR STRT - center		
		EVNT TMR RSET - UP		
	2	LEB		
		UTIL PWR - OFF	100	Connector covered.
		FLOOD DIM - as desired		
		FLOOD FIXED - as desired		
		LEB LT (3) - as desired		
		G/N OPT PWR - OFF		
		G/N IMU PWR - on (up)		
		RNDZ XPNDR - OFF		
		SYS TEST (2) - 5A	101	
		SYS TEST ind - 1.1-1.9 vdc		Equivalent to +45° to +75°F nominal SPS oxidizer engine feedline temperature.
		SYS TEST (2) - 6A		
		CM RCS HTRS - OFF		
		WASTE H20 DUMP - OFF		
		UR DUMP - OFF		
		CAUTION		
		OPT MODE switch must not be moved during prelaunch or inadvertent jettison of optics covers could occur.		

BACKUP CREW PRELAUNCH CHECKS

STA/T STEP	PROCEDURE	PANEL	REMARKS
CMP	OPT ZERO - ZERO	122	
	OPT MODE - MAN		
	OPT SPEED - LO		
	OPT COUPLING - DIRECT		
	OPT TELTRUN - SLAVE TO SXT		
	COND LAMPS - ON		
	UP TLM - ACCEPT		
	SCI/UTIL PWR - OFF	163	Connector covered.
	Sci PWR - OFF	162	Connector covered.
3	RHEB		
	cb panel 225 - all closed	225	
	cb panel 226 - all closed except	226	
	cb FC REACS (3) - open		FC reactant valve circuit breakers are opened after FC start up to preclude inadvertent valve closure.
	cb panel 250 - all closed except	250	
	CAUTION		
	cb's PYRO A&B TIE TO BAT BUS A&B (2) should never be closed when cb's PYRO A&B SEQ A&B (2) are closed. Loss of pyro battery power could result.		
	cb PYRO A TIE TO BAT BUS A - open		
	cb PYRO B TIE TO BAT BUS B - open		
	cb BAT C TO BAT BUS A, B (2) - open		
	WASTE MGMT OVBD DRAIN vlv - OFF	251	
	BAT VENT vlv - VENT	252	
	WASTE STOWAGE VENT vlv - CLOSED		

BACKUP CREW PRELAUNCH CHECKS

STA/T	STEP	PROCEDURE	PANEL	REMARKS
		4.1.5 PRE-EGRESS PROCEDURES		
	1	Secondary Glycol Loop Check		
LMP		ECS IND sel - SEC	2	
		SEC COOL LOOP PUMP - AC 1		
		ECS RAD SEC IN TEMP ind - 73-100°F		
		ECS RAD SEC OUT TEMP ind - 73-100°F		
		GLY EVAP OUT TEMP ind - 73-100°F		
		GLY EVAP SEC STM PRESS ind - 0.25 psia (pegged)		
		GLY DISCH SEC PRESS ind - 39-51 psig		
		ACCUM SEC QTY ind - 30-50%		
		SEC COOL LOOP PUMP - AC 2		
		GLY DISCH SEC PRESS ind - 39-51 psig		
		SEC COOL LOOP PUMP - off (center)		
		ECS IND sel - PRIM		
CMP		GLY TO RAD SEC vlv - BYPASS	377	
	2	Primary Glycol Loop Activation		
LMP		ECS GLY PUMPS - 2-AC1	4	
		GLY DISCH PRIM PRESS ind - 40-52 psig	2	
		ACCUM PRIM QTY ind - 30-50%		
		ECS GLY PUMPS - 1-AC1	4	
		GLY DISCH PRIM PRESS ind - 40-52 psig	2	
		ECS RAD FLOW PWR CONT - PWR		
		ECS RAD FLOW AUTO CONT - 2		
		ECS RAD tb - 2		2 indicates No. 2 flow proportioning valve controlling flow.
		ECS RAD FLOW AUTO CONT - AUTO		
		ECS RAD tb - gray		Gray indicates No. 1 flow proportioning valve controlling flow.
		ECS RAD FLOW PWR CONT - off (center)		

BACKUP CREW PRELAUNCH CHECKS

STA/T	STEP	PROCEDURE	PANEL	REMARKS
	3	Suit Circuit O2 Flow Adjustment		
CDR		DIRECT O2 vlv - OPEN (CCW)	7	Valve adjusted to regulate O2 flow to 0.45 lb/hr for increased volume with prime crew in the loop.
LMP		O2 FLOW ind - 0.4-0.5 lb/hr	2	
	4	Verify/set controls		
ALL		PWR (3) - OFF SUIT PWR (3) - OFF	9,10,6	
	5	Disconnect comm control head from CWG adapter (3)		

BACKUP CREW PRELAUNCH CHECKS

STA/T	STEP	PROCEDURE	PANEL	REMARKS
	4.2	PRIME CREW PRELAUNCH CHECKS		
	4.2.1	INGRESS AND STATUS CHECKS		
CDR	1	Ingress into couch		
	2	Pyro Check and First Suit Hookup		
		SECS PYRO ARM (2) - SAFE (unlocked)	8	Range safety officer provides key to remove guard from the lever lock SECS PYRO ARM switches.
		SUIT PWR - OFF	9	
		PWR - OFF		
		AUDIO CONT - NORM		
		Suit flow vlv - OFF (by technician)	301	
		Remove suit hose interconnect		
		Connect CM O2 umbilical and comm control head to suit connectors		Aided by space suit technician.
		SUIT PWR - on (up)	9	
		PWR - AUDIO/TONE		
		Suit flow vlv - SUIT FULL FLOW (by technician)	301	
		SUIT COMPR 2 - AC1 (by technician)	4	
		SUIT COMPR 1t - off	2	
		SUIT CKT H20 ACCUM AUTO - 1		
		Shut off and remove portable O2 ventilator (by technician)		
		SUIT COMPR ΔP ind - 0.7-0.9 psi		Indicates suit compressor differential.
		SUIT CAB ΔP ind - >+2.0 in. H20		Indicates suit-to-cabin differential.
	3	Audio Panel Check		
		MODE - INTERCOM/PTT	9	
		VOX SENS tw - TBD		
		S BD - T/R		
		S BD VOL tw - TBD		

PRIME CREW PRELAUNCH CHECKS

NORMAL/BACKUP

STA/T	STEP	PROCEDURE	PANEL	REMARKS
CDR		MASTER VOL tw - TBD	9	
		INTERCOM - T/R		
		INTERCOM VOL tw - TBD		
		VHF AM - T/R		
		VHF AM VOL tw - TBD		
		AUDIO CONT - NORM		
		PAD COMM VOL tw - TBD		
		PAD COMM - T/R		
	4	Connect restraint harness (by technician)		
LMP	5	Ingress into couch		
	6	Second Suit Hookup		
		SUIT PWR - OFF	6	
		PWR - OFF		
		AUDIO CONT - NORM		
		Suit flow vlv - OFF (by technician)	300	
		Remove suit hose interconnect		
		Connect CM 02 umbilical and comm control head to suit connectors		Aided by space suit technician.
		SUIT PWR - on (up)	6	
		PWR - AUDIO/TONE		
		Suit flow vlv - SUIT FULL FLOW (by technician)	300	
		SUIT COMPR 1 - AC1	4	
		SUIT COMPR 2 - OFF		
		Shut off and remove portable 02 ventilator (by technician)		
		SUIT COMPR ΔP ind - 0.7-0.9 psi	2	Indicates suit compressor differential pressure.
		SUIT CAB ΔP ind - >+2.0 in. H20		Indicates suit-to-cabin differential pressure.
	7	Audio Panel Check per step 3	6	

PRIME CREW PRELAUNCH CHECKS

STA/T	STEP	PROCEDURE	PANEL	REMARKS
LMP	8	Connect restraint harness (by technician)		
CMP	9	Ingress into couch		
	10	Third Suit Hookup		
		SUIT PWR - OFF	10	
		PWR - OFF		
		AUDIO CONT - NORM		
		Suit flow vlv - OFF (by technician)	302	
		Remove suit hose interconnect		
		Connect CM O2 umbilical and comm control head to suit connectors		
		SUIT PWR - on (up)	10	
		PWR - AUDIO/TONE		
		Suit flow vlv - SUIT FULL FLOW (by technician)	302	
		Shut off and remove portable O2 ventilator (by technician)		
LMP		SUIT COMPR ΔP ind - 0.7-0.9 psi	2	Indicates suit compressor differential pressure.
		SUIT CAB ΔP ind - >+2.0 in. H20		Indicates suit to cabin differential pressure.
CMP	11	Audio Panel Check per step 3	10	
	12	Connect restraint harness (by technician)		
	13	Pressure Suit Circuit and PGA Check at Sea Level (a or b)		
		a. Gross Suit Circuit Verification		This procedure may be used in lieu of b (PGA Check Only), to ascertain complete suit loop integrity.
CDR		DIRECT O2 vlv - partially OPEN (CCW)	7	Previously adjusted by ground support personnel.

PRIME CREW PRELAUNCH CHECKS

STA/T STEP	PROCEDURE	PANEL	REMARKS
CMP	O2 FLOW ind - 0.4-0.5 lb/hr	2	
	SUIT PRESS ind - 14.9 psi		Suit pressure greater than cabin pressure to maintain integrity of suit circuit purge.
	SUIT TEMP ind - 45-55°F		
	CO2 PART PRESS ind - <7.6 mm Hg		
	SUIT CAB ΔP ind - >+2.0 in. H20		Pressure differential to be maintained at a minimum of 2.0 in. H20.
CDR	SUIT TEST vlv - PRESS	380	All crewmen exercise PGA joints during pressurization period.
CMP	SUIT CAB ΔP ind - +5.2 in. H20 (pegged)	2	
	O2 FLOW ind - 1.0 lb/hr (pegged)		
	O2 FLOW HI lt - on		After 16-second delay.
CMP,LMP	MASTER ALARM pb/lt (2) - on, push	3,122	MASTER ALARM light on MDC-1 disabled because C/W NORM switch is in BOOST position.
CMP	SUIT PRESS ind - 17.0 psia (pegged)	2	
ALL	PGA press ind - 4.1-4.5 psig	PGA	In approximately 75 seconds.
CDR	DIRECT O2 vlv - close (CW)	7	
	WARNING Sudden depressurization may result from aneroid chamber relief valve leakage when demand regulator is placed in OFF position, causing crew discomfort or possible injury.		
	O2 DEMAND REG vlv - OFF	380	
	O2 FLOW ind - 0.2 lb/hr (pegged)	2	
	O2 FLOW HI lt - off		

PRIME CREW PRELAUNCH CHECKS

STA/T STEP	PROCEDURE	PANEL	REMARKS
ALL	PGA press ind - <0.5 psi/min pressure decay	PGA	Crewmen to remain inactive while monitoring pressure decay to preclude indicator fluctuation.
CDR	O2 DEMAND REG vlv - BOTH	380	Momentary O2 flow increase until SUIT TEST vlv in DEPRESS position.
	SUIT TEST vlv - DEPRESS		
CMP	SUIT CAB ΔP ind - >+2.0 in. H20	2	Pressure differential to be maintained at a minimum of 2.0 in. H20.
	SUIT PRESS ind - slightly >PRESS CABIN ind		In approximately 75 seconds.
CDR	SUIT TEST vlv - OFF	380	
	DIRECT O2 vlv - partially OPEN (CCW)	7	
CMP	O2 FLOW ind - 0.4-0.5 lb/hr	2	
	SUIT CAB ΔP ind - >+2.0 in. H20		Indicates suit-to-cabin differential pressure.
	b. PGA Check Only		This procedure performed only if individual or collective PGA verification required.
CDR	DIRECT O2 vlv - partially OPEN (CCW)	7	Previously adjusted by ground support personnel.
CMP	O2 FLOW ind - 0.4-0.5 lb/hr	2	Suit pressure greater than cabin pressure to maintain integrity of suit circuit purge.
	SUIT CAB ΔP ind - >+2.0 in. H20		
CDR	SUIT TEST vlv - PRESS	380	All crewmen exercise PGA joints during pressurization period.
CMP	O2 FLOW ind - 1.0 lb/hr (pegged)	2	
	O2 FLOW HI lt - on		After 16-second delay.
	MASTER ALARM pb/lt (2) - on, push	3,122	MASTER ALARM light on MDC-1 disabled because C/W NORM switch in BOOST position.
	SUIT CAB ΔP ind - +5.2 in. H20 (pegged)	2	

PRIME CREW PRELAUNCH CHECKS

NORMAL/BACKUP

STA/T STEP	PROCEDURE	PANEL	REMARKS
CDR	DIRECT 02 vlv - close (CW)	7	
ALL	PGA press ind - 4.1-4.5 psig	PGA	In approximately 75 seconds.
	WARNING Suit flow valve(s) may remain in OFF position for no longer than one minute or asphyxiation may result.		
	CAUTION If all suit flow valves are closed simultaneously, the suit compressors must be shut off to prevent compressor damage due to deadheading of the suit loop.		
	SUIT flow vlv - OFF (suited crewmen)	300,301,302	Aided by space suit technician if all astronauts previously restrained.
	Disconnect 02 exhaust umbilical from PGA (suited crewmen)		
	PGA press ind - <0.5 psi/min pressure decay (suited crewmen)	PGA	Crewmen to remain inactive while monitoring pressure decay to preclude indicator fluctuation.
	Reconnect 02 exhaust umbilical to PGA (suited crewmen)		
	Suit flow vlv - SUIT FULL FLOW (suited crewmen)	300,301,302	
CDR	SUIT TEST vlv - DEPRESS	380	
CMP	02 FLOW HI lt - off	2	
	SUIT PRESS ind - slightly >CAB PRESS ind		In approximately 75 seconds.

PRIME CREW PRELAUNCH CHECKS

STA/T	STEP	PROCEDURE	PANEL	REMARKS
CMP		SUIT TEST vlv - OFF	380	
CDR		DIRECT 02 vlv - partially OPEN (CCW)	7	
CMP		02 FLOW ind - 0.4-0.5 lb/hr	2	
		SUIT CAB ΔP ind - >+2.0 in. H20		
	14	Cabin Closeout		
		Unified hatch closing	Unified hatch	
		Verify external tool stowed on outside of hatch (technician)		
		Remove hatch seal protector (technician)		
		Puncture GN2 bottle 1 (technician)		
		Hatch open lock - release (technician)		
		Push hatch to near closed position (technician)		
		Gear box sel - LATCH		
		Actr handle sel - L (latch)		
		Lock pin rel knob - UNLOCK (verify)		
		Actr handle rel - push or squeeze		Pushbutton or squeeze bar releases actuator handle for operation.
		Hold hatch closed		
		Actr handle - operate (until hatch is fully latched)		
		Lock pin rel knob - LOCK		Lock pin release knob automatically goes into LOCK and lock pin engaged when hatch fully latched.
		LOCK PIN ind - flush (verify)		Indicates lock pin not sheared and engaged.
		Actr handle rel - push or squeeze		
		Actr handle - move to stowage position		
		Configure hatch for rapid egress		
		Gear box sel - UNLATCH		
		Actr handle sel - U (unlatch)		

STA/T STEP	PROCEDURE	PANEL	REMARKS
CMP	BPC JETT knob - launch (CW)	Unified hatch	
	GN2 press ind - check		
	If pressure is below 2000 psig		
	GN2 vlv handle - unlock and push (outboard until pressure is 2200±200 psig)		Pressure ind will not show increase with GN2 valve handle in charge position.
	GN2 vlv handle - neutral (lock position)		
	xxxxxxxxxxxxxxxxxxxxxxxxxxxxxxxxxxxxxxxx		
	Rapid hatch opening		
LMP	Actr handle sel - push or squeeze		
	Actr handle - operate (until hatch is unlatched)		Lock pin will be sheared. About 5 complete cycles of actuator operation will open hatch.
	Push hatch open		
	If hatch does not open		
	GN2 charge knob 2 - CW		
	GN2 vlv handle - unlock and push (outboard)		
	xxxxxxxxxxxxxxxxxxxxxxxxxxxxxxxxxxxxxxxx		
	Ground performs hatch leak test		Requires approximately 20 minutes.
	Cabin purge to 60% 02/40% N2 (launch atmosphere)		
CDR	CAB PRESS RELF (RH) - DUMP (safety latch off)	325	
	Cabin air composition verified at 60% 02/40% N2		
	CAB PRESS RELF (RH) - BOOST ENTRY (safety latch off)		

PRIME CREW PRELAUNCH CHECKS

STA/T	STEP	PROCEDURE	PANEL	REMARKS
	15	EDS Checkout and Countdown Test		Crew participation in EDS test is directed by ground personnel. Test requires approximately 30 minutes.
		Verify/set controls after test		
CDR		EDS PWR - OFF	7	
CMP		EDS AUTO - OFF	2	
		ABRT SYS 2 ENG OUT - AUTO		
		ABRT SYS LV RATES - AUTO		
	16	RCS Status Check		
		RCS IND sel - SM A, B, C, D		
		SM RCS PKG TEMP ind - ambient		Temperature maintained by thermostatically controlled heaters. Thermostat on-off nominal range for primary heaters is 115-134°F, and 70-118°F for secondary heaters. Heaters operate only after boost insertion to reduce effects of boost heating on package.
		SM RCS He PRESS ind - 4000-4350 psia		Nominal He load 4150 psig at 70°F. Pressure and temperature excursions are due to ambient conditions.
		SM RCS SEC FUEL PRESS ind - 192-207 psia		Primary fuel pressure initially shown for each quad until momentary OPEN position of SEC PRPLNT FUEL PRESS A(B,C,D) switch selected.
		SM RCS IND sw - He TK TEMP		
		SM RCS He TK TEMP ind - ____°F		
		SM RCS IND sw - PRPLNT QTY		
		SM RCS PRPLNT QTY ind - 100%		
		RCS IND sel - CM 1, 2		
		CM RCS He TEMP ind - 60-90°F		
		CM RCS He PRESS ind - 4000-4450 psia		
		CM RCS MANF PRESS ind - 25-105 psia		Pressure monitored is GSE servicing pressure on fuel and oxidizer tanks. Servicing pressure is 30±2 psig at 68°F. Pressure excursions are a function of temperature.

STA/T STEP	PROCEDURE	PANEL	REMARKS
-60:00			
	4.2.2 G&C VERIFICATION		
	1 Gyro Powerup		
CDR	FDAI/GPI PWR - BOTH	7	
	SCS ELEC PWR - GDC/ECA		
	BMAG TEMP lt (both) - off	2	
	BMAG PWR (both) - ON	7	
	2 GDC Alignment		
	FDAI SEL - 1	1	
	FDAI SOURCE - ATT SET		
	ATT SET tw (3) - R 163°, P 90°, Y 0°		
	GDC ALIGN pb - push		
	FDAI 1 - errors null		
	ATT SET tw (3) - R TBD, P TBD, Y TBD		
	FDAI 1 - verify errors full scale R left, Y left, P down		
	FDAI SEL - 2		
CMP	FDAI 2 - verify same ind as FDAI 1	2	
CDR	GDC ALIGN pb - push	1	
CMP	FDAI 2 - errors null	2	
CDR	ATT SET tw (3) - R 163°, P 90°, Y 0°	1	
CMP	FDAI 2 - verify errors full scale R right, Y right, P up	2	
	FDAI SEL - 1		
CDR	FDAI 1 - verify same ind as FDAI 2	1	
	GDC ALIGN pb - push		
	FDAI 1 - verify total att R 163°, P 90°, Y 0°		

STA/T	STEP	PROCEDURE	PANEL	REMARKS
		WARNING Sequencers in the SECS should be deactivated to preclude an inadvertent abort.		
CDR		SECS PYRO ARM (2) - SAFE SECS LOGIC (both) - OFF	8	
	3	Gimbal Drive and Trim Check		Verifies trim control and manual (MTVC) control capability of primary and secondary gimbal control system. SPS gimbal angle settings based on CSM c.g. and vary with propellant loading. PITCH and YAW GMBL caution/warning lights (panel 2) will not illuminate unless an actual overcurrent sensed. Otherwise, no indication to crew, except for switch selection, that a gimbal motor not operating or auto switchover (THC-CW) has taken place. SPS GMBL indicator response opposite to RHC commands as follows: RHC — IND + Pitch — - Pitch - Pitch — + Pitch + Yaw — - Yaw - Yaw — + Yaw
		Initialization		
LMP		MN BUS TIE (2) - on (up)	5	
CDR		SCS TVC SERVO PWR 1 - AC1/MNA SCS TVC SERVO PWR 2 - AC2/MNB	7	
		LV/SPS IND SII/SIVB - GPI	1	

PRIME CREW PRELAUNCH CHECKS

NORMAL/BACKUP

STA/T STEP	PROCEDURE	PANEL	REMARKS
CDR	Primary TVC Check	1	
	SPS GMBL MOT PITCH 1 - START		START position is momentary. Start SPS gimbal motors sequentially at ≈1 sec intervals to avoid power surge.
	SPS GMBL MOT YAW 1 - START		START position is momentary.
	Confirm trim control on indicators SPS GMBL tw (2) - + and -		Gimbals drive in response to SPS PITCH and YAW thumbwheel movement. Verifies primary gimbal trim control.
	Auto Switchover Check		
	RHC PWR NORM 2 - AC RHC 2 - ARMED		Opens RHC 2 (Commander's) breakout switch d-c circuits. Prevents RCS jets from firing when RHC used for MTVC check. Normally IGN 1 signal disables RCS pitch and yaw channels 1 second after SPS engine ignition.
	THC - CW		It is possible to actuate THC clockwise or counterclockwise while locked.
	RHC 2 - perform MTVC check SPS GMBL ind (2) - no motion		Verifies TVC control switches from channel 1 to channel 2 (off) when THC-CW selected.
	Secondary TVC Check		
	SPS GMBL MOT PITCH 2 - START		START position is momentary. Start SPS gimbal motors sequentially at ≈1 sec intervals to avoid power surge.
	SPS GMBL MOT YAW 2 - START		START position is momentary.
	Confirm trim control on indicators SPS GMBL tw (2) - + and -		Gimbals drive in response to SPS GMBL PITCH & YAW thumbwheel movement. Verifies secondary gimbal trim control.
	RHC 2 - perform MTVC control check		Gimbals drive in response to RHC movement, and return to set-in values when RHC is neutral. Verifies secondary MTVC loops.

PRIME CREW PRELAUNCH CHECKS

STA/T STEP	PROCEDURE	PANEL	REMARKS
CDR	TVC GMBL DR (2) - 1	1	
	RHC 2 - perform MTVC control check		Gimbals drive in response to RHC movement, and return to set-in values when RHC is neutral. Verifies auto switch from secondary to primary control loops, and verifies control of primary MTVC loops through the RHC.
	THC - neutral		
	RHC PWR NORM 2 - AC/DC		
	TVC GMBL DR (2) - AUTO		
	SPS GMBL MOT PITCH 1 - OFF		Shut off gimbal motors sequentially to avoid a power surge.
	SPS GMBL MOT YAW 1 - OFF		
	SPS GMBL tw (2) - Y TBD, P TBD		Gimbals are trimmed to thrusting values (SCS modes). If thrusting performed in CMC control, CMC program will automatically drive gimbals to trim position at proper time.
	SPS GMBL MOT PITCH 2 - OFF		
	SPS GMBL MOT YAW 2 - OFF		
	LV/SPS IND SII/SIVB - SII/SIVB		
LMP	MN BUS TIE (2) - OFF, then AUTO	5	
	4. SM-RCS Ground Firing Tests		
CMP	SM RCS He 1 (4) - OPEN	2	OPEN position is momentary.
	SM RCS He 1 tb (4) - gray		He isolation valves open.
	SM RCS He 2 (4) - OPEN		OPEN position is momentary.
	SM RCS He 2 tb (4) - gray		He isolation valves open.
	SM RCS PRPLNT (4) - OPEN		OPEN position is momentary.
	SM RCS PRIM PRPLNT tb (4) - gray		Primary fuel and oxidizer isolation valves for all quads are open.

PRIME CREW PRELAUNCH CHECKS

NORMAL/BACKUP

STA/T STEP	PROCEDURE	PANEL	REMARKS
CMP	SM RCS SEC PRPLNT tb (4) - gray	2	Secondary fuel and oxidizer isolation valves for all quads open.
	RCS IND sel - SM A, B, C, D SM RCS SEC FUEL PRESS ind - 192-207 psia		Check pressure with RCS INDICATORS switch positioned at SM A, B, C, and D (in turn).
CDR	cb SECS ARM (2) - close	8	
	AUTO RCS SEL PITCH A4 - MNA		
	AUTO RCS SEL YAW B4 - MNA		
	AUTO RCS SEL PITCH C3 - MNA		
	AUTO RCS SEL YAW D3 - MNA		
	RCS CMD - ON	2	ON position is momentary. If SM RCS activated or fired prior to launch scrub, propellant would be in engine lines and propellant residue in engines. This would be an unsafe condition requiring deactivation and decontamination of SM RCS.
	CAUTION Each jet should be fired only once and for a duration of one second or less.		
	RHC - plus pitch Confirm jet C3 fires		Ground provides confirmation of jets firing.
	RHC - minus pitch Confirm jet A4 fires		
	RHC - plus yaw Confirm jet D3 fires		
	RHC - minus yaw Confirm jet B4 fires		
CMP	RCS CMD - OFF		OFF position is momentary.

PRIME CREW PRELAUNCH CHECKS

STA/T	STEP	PROCEDURE	PANEL	REMARKS
CDR		AUTO RCS SEL (16) - MNA RHC - plus R, P, Y, minus R, P, Y Confirm no jets fire AUTO RCS SEL (16) - OFF RHC - LOCKED	8	
	5	GDC Drive Check FDAI 1 - errors moved R right, P down, Y left FDAI SEL - 1/2 FDAI SOURCE - CMC FDAI 1 - total att R 163°, P 90°, Y 0°	1	
	6	RSI Setup EMS ROLL - on (up) GDC ALIGN pb - push and hold ATT SET YAW tw - adjust until RSI points up GDC ALIGN pb - rel EMS ROLL - OFF		
	7	Align GDC to IMU FDAI SEL - 1 FDAI SOURCE - ATT SET ATT SET - IMU ATT SET tw (3) - null FDAI 1 errors ATT SET - GDC GDC ALIGN pb - push FDAI SOURCE - CMC FDAI SEL - 1/2		Ensures that GDC is aligned to actual IMU angles, rather than calculated values. Attitude reference comparison (in orbit) will be more accurate.

STA/T	STEP	PROCEDURE	PANEL	REMARKS
CDR	8	EMS FUNC - EMS TEST 1	1	Delayed until T -30 minutes because procedure bypasses remaining ground test patterns, which are then unavailable if countdown recycled.
		Slew scroll to superimpose display index on alignment notch of 1st un-numbered test pattern		
-30:00				
	9	Pad Abort Enable		
		EDS PWR - on (up)	7	
ALL		Shoulder harness - locked		
CDR		cb SECS LOGIC (2) - close	8	
		SECS LOGIC (both) - on (up)		Lever-lock.
		SECS PYRO ARM (2) - on (up)		Both lever-lock pyro arm switches must be operated.
		CM RCS LOGIC - on (up)	1	LES pad abort capability enabled; SECS LOGIC and PYRO buses are armed.
-20:00				
	10	Set EMS ΔV		
		EMS FUNC - ΔV SET		
		Set ΔV ind - 3000 fps		
		Verify EMS MODE - STBY		
		EMS FUNC - ΔV		
		FDAI 1 - total att R 163°, P 90°, Y 0°		FDAI 2 will drift as function of earth rate.
		BMAG MODE (3) - RATE 1		
	4.2.3	LAUNCH PREPARATION		
-15:00				
	1	LCC Confirm Launch Ready		
CMP		Gear box sel - UNLATCH (verify)	Unified hatch	
		Actr handle sel - U (unlatch) (verify)		
CDR		FDAI SCALE - 5/5	1	
		RATE - HIGH		

PRIME CREW PRELAUNCH CHECKS

STA/T STEP	PROCEDURE	PANEL	REMARKS
CDR,CMP	RHC (both) - ARMED		
CDR	RHC PWR DIRECT (both) - MNA/MNB	1	
	AUTO RCS SEL B/D ROLL (4) - MNA	8	
	AUTO RCS SEL PITCH (4) - MNA		
	AUTO RCS SEL YAW (4) - MNA		
-10:00	CMC MODE - FREE	1	
	SPS THRUST lt - out		
	FCSM (2) - on (up)		
ALL	MODE (3) - PTT	6,9,10	
	PAD COMM (3) - OFF		
LMP	VHF AM - OFF	6	
	Perform S-band air-to-ground voice check with MCCH		
	VHF AM - T/R		
	S BD - OFF		
	Perform VHF air-to-ground voice check with MCCH		
	S BD - T/R		
ALL	S BD VOL tw - max decr	6,9,10	
CDR			
-05:00	SPS THRUST - NORMAL	1	Lever-lock.
	ΔV THRUST (2) - OFF		Guarded.
	LV/SPS IND α - α		
	LV/SPS IND SII/SIVB - SII/SIVB		
CMP	EDS AUTO - on (up)	2	
	ABRT SYS LV RATES - AUTO		
	ABRT SYS 2 ENG OUT - AUTO		
	RCS CMD - OFF		OFF position is momentary.
	LV SII/SIVB - OFF		Guarded.
2	G&C Preparation		
	UP TLM (2) - ACCEPT		
-03:00	Verify PO2		

PRIME CREW PRELAUNCH CHECKS

STA/T STEP	PROCEDURE	PANEL	REMARKS
	CAUTION Do not press ENTR after keying V75. If ENTR is pressed the G&C system will receive incorrect lift-off time.		
	Key V75		
3	Systems Preparation		
LMP	FC REACS VLV - LATCH	3	
CDR -01:15	PRIM GLY TO RAD - PULL TO BYPASS	325	Immediately after GSE water-glycol pump is deactivated at T -01:15.
CMP	GLY DISCH PRIM PRESS ind - ____ psig	2	
	ACCUM PRIM QTY ind - ____ %		
LMP	TAPE RCDR FWD - FWD	3	
	TAPE MOTION tb - gray		Indicates tape recorder operating.
	MN BUS TIE (2) - on (up)	5	
-00:45 CMP	GDC ALIGN pb - push, hold	1	
	FDAI 2 total attitude - no motion		
	GDC ALIGN pb - release		
	READY FOR IGNITION		

STA/T STEP	PROCEDURE		PANEL	REMARKS
	4.3 BOOST AND INSERTION			
	4.3.1 BOOST			
-00:09	Ignition			LV engines lights (5) go on at T -12 sec when S-IC indicating circuits are armed.
CDR -00:01	LV ENG lts (5) - off		1	Indicates all five engines have achieved over 90% of rated thrust.
00:00	LIFT OFF lt - on and NO AUTO ABORT lt - off	00:00		
		MODE 1A		Additional lift-off cues: Event timer start Voice communications from MSFN DSKY displays Program 11
	WARNING Do not press the LIFT OFF/NO AUTO ABORT pb if LV RATE or any LV ENG lts on.			Manual abort initiation may be required. (Refer to mission rules.)
	When liftoff verified LIFT OFF/NO AUTO ABORT pb - push			Guarded.
CDR, CMP	Verify event timer ind resets to zero and starts counting up	RATES $\pm 3°$/sec P,Y $\pm 20°$/sec R	1	

STA/T	STEP	PROCEDURE	PANEL	REMARKS
		xxxxxxxxxxxxxxxxxxx x x		
CDR		EVNT TMR STRT - START	1	START position is momentary.
		x x xxxxxxxxxxxxxxxxxxx		
CMP		Verify MSN TMR ind resets to zero and starts counting up	2	
		xxxxxxxxxxxxxxxxxxx x x		
		MSN TMR - START		
		x x xxxxxxxxxxxxxxxxxxx		
		Verify P11 (auto) Key VERB Key REL		
		xxxxxxxxxxxxxxxxxxxxx x x		
		NO P11 - Key ENTR	MODE 1A	V75 inserted in P02 prior to lift-off.
		x x xxxxxxxxxxxxxxxxxxxxx		
		V06 N62 VI XXXXX. FPS H DOT XXXXX. FPS H XXXX.X NM		These parameters will be displayed throughout ascent. VI = Inertial velocity. H DOT = Alt rate. H = Altitude above pad radius.

BOOST AND INSERTION

STA/T STEP	PROCEDURE		PANEL	REMARKS
CDR				
+00:10	Roll program - report Pitch program - report	ATT ERROR ±5° P,Y		
+00:38	Roll program - complete			
CMP				
+00:42	ABRT SYS PRPLNT - RCS CMD CM RCS PRPLNT tb (both) - gray Roger MODE 1B	00:42 MODE 1B	2	Gray indicates propellant valves open.
CDR				
+00:50	Monitor LV α/SPS Pc ind to T +00:55 Rate limit change to 5°/sec - report	RATES ±5°/sec P,Y ±20°/sec R	1	
LMP	CAB PRESS ind - starts decrease xxxxxxxxxxxxxxxxxxxxx x x If no decrease by T +00:55		2	Relieves high CM-to-atmosphere Δp.
CDR	CAB PRESS RELF (RH) - DUMP (safety latch off) x x xxxxxxxxxxxxxxxxxxxxx		325	RH valve has four positions. Cabin/ambient differential pressure increases to approximately 6.8 psia by T +00:55, and to the design limit of 8.6 psia by T +00:63.
+01:17	MAX Q	100% AOA 12° ROLL error		

BOOST AND INSERTION

NORMAL/BACKUP

STA/T STEP	PROCEDURE		PANEL	REMARKS
CMP				
+01:40	ABRT SYS 2 ENG OUT - OFF		2	
	ABRT SYS LV RATES - OFF			
CDR	LV/SPS IND α - Pc		1	
+01:50	Roger MODE 1C	01:50 MODE 1C		
	FDAI SCALE - 50/15/50/10			
+02:10	Report GO/NO GO for staging			
+02:26	CECO (LV ENG 5 lt - on)			Center engine cutoff.
	LIFT OFF lt - off			
+02:38.1	OECO (LV ENG 1, 2, 3 & 4 lts - on)			Outboard engine cutoff.
+02:39	All engine lts - off			S-IC/SII separation.
+02:40	LV ENG 1, 2, 3, 4 & 5 lts - on			SII engine ignition.
	SII SEP lt - on			SII 2nd plane separation circuitry armed.
+02:43	All engine lts - off			SII engines 65% rated thrust.
	xxxxxxxxxxxxxxxxxxxxxx x x If early SII/SIVB staging required LV SII/SIVB - LV STAGE x x xxxxxxxxxxxxxxxxxxxxxx		2	
	Monitor LV TANK PRESS ind (4) - >_____Δp	MODE 1C	1	SII and SIVB fuel tanks.

BOOST AND INSERTION

STA/T STEP	PROCEDURE	PANEL	REMARKS
CMP	GLY EVAP STM PRESS AUTO - AUTO GLY EVAP H2O FLOW - AUTO ECS IND sel - SEC SEC COOL LOOP EVAP - EVAP for 4 sec	2	
	CAUTION SEC COOL LOOP EVAP switch must be placed in RESET immediately after GLY EVAP SEC STM PRESS indicator drops below 0.25 psia (off the peg), to preclude water carryover and associated freezing.		
	GLY EVAP SEC STM PRESS ind - <0.25 psia SEC COOL LOOP EVAP - RESET for 15 sec, then off (center) CAB TEMP - AUTO ECS IND sel - PRIM		
CDR	LV/SPS IND SII/SIVB - GPI	1	Ground will monitor LV-FTP during time GPI is displayed and will inform crew of any problem.
	MODE 1C		
	SPS GMBL MOT PITCH 1 - START SPS GMBL MOT YAW 1 - START SPS GMBL MOT PITCH 2 - START		START position is momentary. Start SPS gimbal motors sequentially at ≈1 second interval to avoid power surge.

STA/T STEP	PROCEDURE		PANEL	REMARKS
CDR	SPS GMBL MOT YAW 2 - START Check SPS GMBL ind (2) YAW-TBD PITCH-TBD LV/SPS IND SII/SIVB - SII/SIVB		1	
+03:09	SII SEP lt - off			SII interstage jettisoned.
CMP +03:14	EDS AUTO - OFF ABRT SYS TWR JETT (2) - on (up) (TFF 1+20) Report TWR JETT and MODE II	03:14	2	Guarded. On position is momentary.
	xxxxxxxxxxxxxxxxxxxxxxxx x x No tower jettison Refer to EMERGENCY PROCEDURES, para 5.3.1.5 x x xxxxxxxxxxxxxxxxxxxxxxxx	MODE II		
+03:30	LV Guidance initiate			
+03:53	Guidance good			
CDR +04:00	Report status			
LMP +05:00	Report status			
CDR +06:00	Report status			
CMP +07:00	Report status			
LMP +08:00	Report status			

BOOST AND INSERTION

STA/T STEP	PROCEDURE	PANEL	REMARKS
CDR			
+08:42	All engine lts - on	1	SII engine cutoff.
+08:43	All engine lts - out		SII/SIVB separation.
	xxxxxxxxxxxxxxxxxxxxxxxxxxxx x x If no SII/SIBV staging LV SII/SIVB - LV STAGE x x xxxxxxxxxxxxxxxxxxxxxxxxxxxx		
+08:45	LV ENG 1 lt - on		SIVB ignition armed.
+08:48	LV ENG 1 lt - off		SIVB thrust to 65%.
	Monitor LV TANK PRESS ind (4) - >_____ΔP		SIVB OXID TANK and SIVB fuel tank.
+09:00	Report status	MODE II	
+10:00	Report status		
CMP			
+10:07	Report/confirm COI MODE IV	10:07	
+10:12		10:12 MODE IV MODE III	
+11:27	FIXED ΔV MODE	11:27 FIXED ΔV MODE	
CDR			
+11:29	Insertion LV ENG 1 lt - on SECO - Report	INSERTION 22:51	SIVB engine cutoff.

BOOST AND INSERTION

NORMAL/BACKUP

STA/T STEP	PROCEDURE	PANEL	REMARKS
	CAUTION If no SECO, go to backup. THC must be returned from CCW position before 3.0 sec or CSM/SIVB separation will occur.		
	xxxxxxxxxxxxxxxxxxxxxx x x		
CDR	THC - CCW - return within 1 sec		
	x x xxxxxxxxxxxxxxxxxxxxxx		
CMP	Record from DSKY		
	VI XXXXX. FPS	2	VI = Inertial velocity.
	H DOT XXXXX. FPS		H DOT = Alt rate.
	H XXXX.X NM		H = Alt above pad radius.
	Key V37E 00E		
	(R30, Orbital Parameters)		
	Key V82E		
	FL V06 N44		
	Ha XXXX.X NM		
	Hp XXXX.X NM		
	TFF XXBXX MIN-SEC		Time of free fall to 49.4 NM.
	PRO (exit if Hp < 50 NM)		
	SAFE ORBIT		

STA/T	STEP	PROCEDURE	PANEL	REMARKS
CMP		FL V06 N32	2	Time from perigee.
		T perigee	00XXX. HRS 000XX. MIN 0XX.XX SEC	
		PRO		

NORMAL/BACKUP

STA/T	STEP	PROCEDURE	PANEL	REMARKS
	4.3.2	POSTORBITAL INSERTION CHECK		
	4.3.2.1	Status Checklist		
CDR		SPS GMBL MOT PITCH 2 - OFF	1	Shut off gimbal motors sequentially to avoid power surge. Setting servo 2 off first minimizes switching in the logic.
		SPS GMBL MOT YAW 2 - OFF		
		SPS GMBL MOT PITCH 1 - OFF		
		SPS GMBL MOT YAW 1 - OFF		
LMP		MN BUS TIE (2) - OFF	5	
CDR		ΔV THRUST (2) - OFF	1	Guarded.
		TRANS CONTR PWR - OFF		
		RHC PWR DIRECT (2) - OFF		
		ELS AUTO - MAN		
		CM RCS LOGIC - OFF		
		FCSM (2) - RESET/OVERRIDE		
		cb ELS BAT (2) - open	8	
		cb FLOAT BAG (3) - open		
		SECS PYRO ARM (2) - SAFE		Lever lock.
		SECS LOGIC (both) - OFF		Lever lock.
		AUTO RCS SEL (16) - OFF		
		SCS TVC SERVO PWR (2) - OFF	7	
		EDS PWR - OFF		LV ENG 1 lt - out.
		cb FC REACS (3) - open (verify)	226	
LMP		FC REACS VLV - NORM	3	Setting switch to NORM removes holding voltage from open side of FC reactant valves.
CMP		UP TLM IU - as required	2	
		SM RCS HTRS (4) - PRIM		
		C/W NORM - NORMAL		
ALL		MODE (3) - as desired	9,10,6	
		Couch to docking position		
		Record 2-1 data from the ground		This data defines the landing site and thrusting parameters for a first orbit, deorbit and entry.
		Lat_____ Long_____		
		GETI PERM_____		
		GETI_____ ΔV_____		

STA/T	STEP	PROCEDURE	PANEL	REMARKS
	4.3.2.2	Perform SCS Attitude Reference Comparison Check, para 4.10.2.7		Check must be performed as near to orbit injection as possible to prevent additional drift in the attitude reference systems.
	4.3.2.3	SCT/SXT Dust Cover Jett Procedure		
		WARNING Until the optics are to be used, the OPT ZERO (panel 122), should be kept at ZERO to prevent inadvertent jettison of the optics covers.		
CMP	1	G/N PWR OPT - on (up)	100	
		OPT ZERO - OFF	122	Optics zero switch to OFF enables function of OPT MODE and OPT SPEED switches.
		OPT MODE - MAN		
		OPT COUPLING - DIRECT		
		OPT SPEED - HI		
	2	OHC - max right Observe ejection through optics		
	4.3.2.4	ECS Post Insertion Configuration		
CDR		cb PL VENT FLT/PL - open	8	Prevents inadvertent opening of postlanding vent valves.
		CAB PRESS RELF (2) - NORMAL (safety latch on)	325	
LMP		GLY EVAP PRIM STM PRESS ind - 0.097-0.145 psia	2	
		GLY EVAP PRIM OUT TEMP ind - 40-43°F		

STA/T	STEP	PROCEDURE	PANEL	REMARKS
LMP		Initiate radiator flow	2	Water-glycol flow through primary loop radiators to commence no sooner than T +15:00 or later than T +30:00. After 1 minute of flow, radiator outlet temp should be less than inlet temp.
		ECS RAD FLOW PWR CONT - PWR		
CDR		PRIM GLY TO RAD - normal (push)	325	
LMP		ECS RAD PRIM HTR - PRIM 1	2	
		ECS RAD PRIM OUT TEMP ind - below ECS RAD PRIM TEMP IN ind		
		xxxxxxxxxxxxxxxxxxxxxxxxxxxxxxxxx		
		Outlet temp higher than inlet		
CDR		PRIM GLY TO RAD - PULL TO BYPASS, recheck in 5 minutes	325	ECS primary loop radiators again isolated. In 5 minutes, flow through radiators is attempted once more by repeating procedure.
		xxxxxxxxxxxxxxxxxxxxxxxxxxxxxxxxx		
CMP		Open coolant control attenuation panel		Covers panel 382.
		EVAP H2O CONT SEC vlv - OFF	382	
		Close coolant control attenuation panel		
		DRNK H2O SUPPLY vlv - ON (CCW)	304	
LMP		ECS RAD tb - gray	2	Gray indicates No. 1 flow proportioning valve controlling flow.
		GLY EVAP IN TEMP - AUTO		
		cb ECS STM/UR DUCT HTR (2) - close	5	
CMP		WASTE H2O DUMP - HTR A	101	
		UR DUMP - HTR A		
CDR		GLY RSVR BYPASS vlv - OPEN	326	
		GLY RSVR OUT vlv - CLOSE		
		GLY RSVR IN vlv - CLOSE		

STA/T	STEP	PROCEDURE	PANEL	REMARKS
LMP		ACCUM PRIM QTY ind - 30-70%	2	
		xxxxxxxxxxxxxxxxxxxxxxxxxxxxxxxx x x If quantity < 30%		
CMP,LMP		PRIM ACCUM FILL vlv - ON, until 40-70% is reached	379	
		x x xxxxxxxxxxxxxxxxxxxxxxxxxxxxxxxx		
		4.3.2.5 Systems Verification and Monitoring		
	1	Mount ORDEAL BOX Perform ORDEAL Initialization, para 4.10.2.8		
	2	Perform C&WS Operational Check, para 4.7.5.1		
CMP	3	Perform SM RCS Monitoring Check, para 4.7.2.2		
	4	Perform CM RCS Monitoring Check, para 4.7.2.3	2	
CMP, LMP	5	Perform EPS Checks, para 4.7.3.1 through 4.7.3.5	2,101,3,5	
	6	Perform ECS Monitoring Check, para 4.7.4.1	379,2	
LMP	7	Perform SPS Monitoring Check, para 4.7.2.1	3	
		4.3.2.6 Cabin Atmosphere Changeover (TBD)		

STA/T STEP	PROCEDURE	PANEL	REMARKS
	4.4 INJECTIONS (TBD)		

NORMAL/BACKUP

STA/T STEP	PROCEDURE	PANEL	REMARKS

4.5 LM INTERFACES

4.5.1 MANEUVERS (TBD)

4.5.1.1 CSM/SLA Separation and Transposition (TBD)

4.5.1.2 Formation Flight With LM/SIVB (General) (TBD)

4.5.1.3 Docking With LM/SIVB (TBD)

4.5.1.4 LM Withdrawal From SLA (TBD)

4.5.1.5 LM Separation From CSM (TBD)

4.5.1.6 Formation Flight With LM (TBD)

4.5.1.7 LM Active Docking With CSM (TBD)

4.5.1.8 CSM Active Docking With LM (TBD)

4.5.1.9 Final CSM Separation From LM (TBD)

4.5.2 INTERVEHICULAR ACTIVITIES (TBD)

4.5.2.1 Preparation for LM Withdrawal (TBD)

4.5.2.2 IVT to LM (TBD)

4.5.2.3 IVT to CSM (TBD)

4.5.2.4 Preparation for Manned LM Separation (TBD)

4.5.3 EXTRAVEHICULAR ACTIVITY (TBD)

STA/T STEP	PROCEDURE	PANEL	REMARKS
	4.5.4 TUNNEL MECHANICAL SYSTEMS		
	4.5.4.1 Docking Probe Removal (CM side)		
CMP	TUNL LT - on (up)	2	
	DOCK PROBE (3) - OFF		
LMP,CDR	Open combined hatch, para 4.7.7.4	tunl	
	Depressurizing button - push for 15 sec		Red button located under pyro components cover. Depressurizes probe retract system when depressed.
	Remove probe stowage receptacle dust covers		
	Disconnect & stow probe umbilicals (2)		
	Close docking ring elect connector covers (2)		
	Remove probe assy		
	Push ratchet handle rel		
	Move ratchet handle outboard 30°		
	Fold probe assy		
	Move probe collar aft		
	Retract support arms from docking ring sockets		
	Rotate capture hatch rel handle 180° (CW) and remove probe		Releases capture latches (3) from drogue.
	Stow probe assy		Probe stowed in (TBD).
CMP	TUNL LT - OFF	2	
	4.5.4.2 Docking Probe Removal (LM side)		
	TUNL LT - on (up)		
CDR	Verify auto docking latches engaged (at least 3 engaged latches 120° apart)	tunl	If latch is not fully engaged, a red button will protrude from latch handle. Manually latch any open latches by pulling handle inboard two complete strokes to cock latch, then push manual release lever at bottom of latch. There are 12 automatic docking latches.

STA/T STEP	PROCEDURE	PANEL	REMARKS
CDR	Disconnect & stow probe umbilicals (2)	tunl	Umbilicals can be stowed after probe in LM.
	Remove probe assy		Steady with left hand while performing following probe removal steps.
	Pull ratchet handle rel toward LM Push ratchet handle 1 inch to detent ratchet and move handle inboard 30° Fold probe assy Move probe collar toward CM Retract support arms from docking ring sockets		
	Stow probe assy in LM		Probe stowed in (TBD).
CMP	TUNL LT - OFF	2	
	4.5.4.3 Docking Probe Installation (CM side)		
	TUNL LT - on (up)		
	Procure probe assy		Probe assy stowed (TBD). Probe assy has not been qualified to remain in cabin atmosphere for more than 24 hours.
	Pull capture latch rel handle aft & rotate (CCW) 150°		Places capture latch rel handle in latch cocked position.
	Install probe assy into drogue Push probe head into drogue until capture latches engage & lock		Probe head has three capture latches.
CMP,LMP	Verify capture latches engagement		CMP verifies engagement by pulling on probe assy. LMP verifies engagement by noting extended position of probe head button.

STA/T STEP	PROCEDURE	PANEL	REMARKS
CMP	Install probe assy into docking ring		
	Align probe support arm with docking ring by color code		Color coding is on probe support arms and docking ring. Electrical umbilicals on probe, and connectors in tunnel will be matched when probe is aligned. Color coding is TBD.
	Push ratchet handle rel		Fixed steady handle should be grasped with left hand for support.
	Pull ratchet handle aft as far as possible		
	Place installation strut in position against tunnel wall		
	Ratchet probe collar fwd until 3 probe support arms engage in docking ring sockets		Ratchet handle should be pumped between stops (25°) until collar fwd motion stops.
	Stow installation strut on support		
	Rotate ratchet handle to align with probe cylinder		
	Push ratchet handle rel		
	Move ratchet handle fwd until lug on ratchet housing is engaged		Handle telescopes during fwd motion and ends in stowed position.
	DOCK PROBE (3) - OFF (verify)	2	Guarded.
	cb INST CONT PWR OPR (2) - open	276	Required to assure power supplied during umbilical connection.
	Connect probe elect umbilicals (2) in docking ring		
	Place dust covers on probe stowage receptacles		Basic installation procedure complete. Not necessary to preload probe assy until LM is ready for separation.
	TUNL LT - OFF	2	
	cb INST CONT PWR OPR (2) - closed	276	

LM INTERFACE

STA/T STEP	PROCEDURE	PANEL	REMARKS
	4.5.4.4 Docking Drogue Removal (CM side)		Normally accomplished when all three crewman are in CM prior to an IVT to LM and normally follows probe removal.
CMP	Open combined hatch, para 4.7.7.4		
	Remove docking probe, para 4.5.4.1		
	TUNL LT - on (up)	2	
	Pull & rotate (CCW) drogue lock lever until flush against tunnel wall	tunl	
	Remove drogue		Drogue outer ring should be grasped with both hands at opposite sides. Drogue lugs must move to left end of support fitting before drogue can be pushed free.
	Rotate (CW) & push until 3 drogue lugs clear support fittings		
	Rotate toward CM and grasp any two handles		
	Maneuver drogue past support fittings and stow in CM		Drogue must be canted and rotated to clear tunnel. Drogue stowed in (TBD).
	TUNL LT - OFF	2	
	4.5.4.5 Docking Drogue Removal (LM side)		
	TUNL LT - on (up)		
	Verify auto docking latches engaged (at least 3 engaged latches 120° apart)	tunl	
CDR,LMP	Push probe capture latch rel with tool B		Releases three probe capture latches.
	Push & rotate (CW) 90° drogue latch lever (3)		
	Remove drogue		
	Rotate (CCW) until each drogue lug (3) is at end of recess in its mount		
	Pull toward LM cabin until drogue lugs are disengaged from support fittings		
	Maneuver into LM cabin & stow		Drogue is stowed in (TBD).

LM INTERFACE

NORMAL/BACKUP

STA/T STEP	PROCEDURE	PANEL	REMARKS
CMP	TUNL LT - OFF	2	
	4.5.4.6 Docking Drogue Installation - Single Crewman (CM side)		Normally used when all 3 crewmen are in the LM prior to an extended stay with the LM docked and the LM hatch is closed.
	TUNL LT - on (up)		
CDR,LMP	Procure drogue from stowage	tunl	Drogue is stowed in (TBD).
	Install drogue		
	Maneuver past support fittings in LM tunnel		Drogue must be canted and rotated to clear the support fittings in the tunnel. Limited clearance between the LM hatch and the support fittings requires care in maneuvering the drogue. Handles should be used for support.
	Align drogue lugs (3) with support fittings in LM tunnel		The drogue must be held along the outer diameter at opposite sides adjacent to the drogue lugs. At this point the drogue handles are facing the LM hatch.
	Pull drogue lugs into the support fittings and rotate (CCW) until lugs hit stops in support fittings		The ramps on the support fittings will guide the drogue lugs into the support fitting recesses.
	Push and rotate drogue latch lever (3) 90° (CW)		This locks the drogue latch mechanism.
	Install docking probe, para 4.5.4.3		
	Close combined hatch, para 4.7.7.5		
CMP	TUNL LT - OFF	2	
	4.5.4.7 Docking Drogue Installation - Two Crewmen (LM & CM side)		Normally used after the CDR and LMP have performed an IVT to LM with the LM hatch open.
	TUNL LT - on (up)		
	Procure drogue from stowage		Drogue is stowed in (TBD).

STA/T	STEP	PROCEDURE	PANEL	REMARKS
CMP		Install drogue		
		Insert drogue into tunnel and rotate until handles are accessible to LMP	tunl	Handles should be used to control movement past the support fittings in LM tunnel.
LMP		Align drogue lugs (3) and push into support fittings in LM tunnel		The ramps on the drogue support fittings will guide the lugs into the support fitting recesses.
		Rotate drogue (CW) until lugs hit stops in support fitting recesses		
		Push and rotate drogue latch lever (3) 90° (CCW)		
CMP		TUNL LT - OFF	2	

4.5.4.8 Hard Docking Tunnel Operations (TBD)

STA/T	STEP	PROCEDURE	PANEL	REMARKS
		4.6 RENDEZVOUS		
		4.6.1 TPI SEARCH (P17)		The purpose of this procedure is to: • Compute parameters associated with minimum energy, safe periapsis transfer maneuver and resultant intercept if GETI (TPI) provided by DSKY input. • Provide Astronaut with option of defining to CMC initial transfer trajectory search sector for central angles either > or <180° from position of active vehicle (CSM) at GETI (TPI). • Display parameters associated with transfer (TPI and intercept). This procedure may be performed concurrently with P20 or independently. If P20 is operating, sighting marks on LM may be initiated by keying V57E (R21) or V54E (R23) at any flashing display in P17. For sighting mark procedures, refer to para 4.6.2, steps 5-7 or 8-10, respectively.
		CMC - on (required), para 4.10.1.2		
CMP	1	Key V37E 17E DSKY P17	2,140	
	2	FL V06 N37 GETI (TPI) 00XXX. HRS 000XX. MIN 0XX.XX SEC Accept Record GETI (TPI) PRO Reject Key V25E Load desired GETI (TPI)		

STA/T	STEP	PROCEDURE		PANEL	REMARKS
CMP	3	FL V06 N72		2,140	
		Δ ang (TPI)	XXX.XX DEG		Δ ang (TPI) - Central angle between vehicles at GETI (TPI). +, CSM ahead; -, CSM behind.
		Δ alt (TPI)	XXXX.X NM		Δ alt (TPI) - Magnitude of altitude difference. +, LM above; -, LM below.
		Search option	0000X.		Search option - 00001, seach for central angle <180°; 00002, search for central angle >180° (from CSM at GETI (TPI) to intercept).
		Accept	Record data PRO		
		Reject	Key V32E Return to step 2 to adjust GETI (TPI)		
		or	Key V23E Load desired search option		
			Poss FL V05 N09 XXXXX (alarm code)		If no solution exists.
			Key V32E Return to step 2		To adjust GETI (TPI) and/or search option.
	4	FL V06 N58			
		Hp	XXXX.X NM		Hp - Altitude of perigee above launch pad radius after TPI maneuver.
		ΔV (TPI)	XXXX.X FPS		ΔV (TPI) - Required impulsive ΔV to accomplish the TPI maneuver at GETI (TPI).
		ΔV (TPF)	XXXX.X FPS		ΔV (TPF) - Required impulsive ΔV to accomplish intercept maneuver (TPF) at calculated time of intercept. +, CSM ascending; -, CSM descending.

STA/T STEP	PROCEDURE	PANEL	REMARKS
CMP	Accept Record data PRO Reject Key V32E Return to step 2 to adjust GETI (TPI) and/or search option	2,140	
5	FL V06 N55 R1 Per code 0000X.		Per code - 00001, perigee between TPI and TPF. 00002, perigee after TPF.
	R3 CENTANG XXX.XX DEG		CENTANG - Central angle of LM from GETI (TPI) to time of intercept.
	Accept Record data PRO Reject Key V32E Return to step 2 to adjust GETI (TPI) and/or search option		
6	FL V37		R00

STA/T	STEP	PROCEDURE	PANEL	REMARKS
		4.6.2 CSM RENDEZVOUS NAVIGATION (P20)		The purpose of this procedure is to: • Control CSM attitude and optics to acquire LM in SXT FOV and to point CSM transponder at LM or to control CSM attitude to acquire LM along CSM +X axis depending on option selected by crew. • To update either LM or CSM state vector depending on crew selection.
		CMC - on (required), para 4.10.1.2 ISS - on and orientation known (required), para 4.10.1.2 & 4.11 SCS - on (desired), para 4.10.2.2 OPTICS - powered up (required), para 4.10.1.4		Provides total attitude and rate monitoring.
CDR		CMC ATT - IMU	1	
		LOGIC 2/3 PWR - on (up)	7	Required for control and display functions if SCS - on option is not selected.
	1	Select Total Attitude Display, para 4.9.2.5		
	2	Select Attitude Control mode (desired), para 4.9.1		
CMP	3	Key V37E 20E DSKY P20	2,140	Selection of P20 automatically selects preferred tracking attitude option and LM state vector update option. Crew may exercise control of these options through use of the following extended verbs.
		Poss PROG alarm Key V05 N09 (to verify alarm) 00210 (ISS not on)		

STA/T STEP	PROCEDURE	PANEL	REMARKS
CMP	or XXXXX (IMU orientation unknown)	2,140	V76E - Selects preferred tracking attitude. V77E - Selects +X axis tracking attitude. V80E - Selects LM state vector update. V81E - Selects CSM state vector update.
	FL V37 Key XXE (select program to turn on ISS and/or perform IMU orientation determination)		
	(Attitude Maneuver Routine, R60)		Provides for maneuver (auto or manual) to attitude specified by option selected.
4	FL V50 N18 (auto maneuver request) R, P, Y XXX.XX DEG		Required gimbal angles.
CDR	Accept SC CONT - CMC CMC MODE - AUTO	1	
CMP	PRO	2,140	This may be performed second time as attitude trim.
	V06 N18 R, P, Y XXX.XX DEG		Priority display. Display will remain a minimum of 5 sec. At completion of maneuver, display will revert to FL V50 N18.
	Monitor auto maneuver on FDAI		
	Reject Key V62E RHC - null FDAI error needles		Provides reference for manual maneuver.
CDR	or SC CONT - SCS	1	
	or CMC MODE - other than AUTO		
CMP	PRO Recycle step 4	2,140	To update display without performing maneuver.

NORMAL/BACKUP

STA/T STEP	PROCEDURE	PANEL	REMARKS
CMP	When attitude is satisfactory ENTR	2,140	Terminates Attitude Maneuver Routine, R60. (Routine R61 will continue to compute and maintain selected attitude (option) as long as SC control is CMC AUTO.)
	a. If optics sighting marks are desired, go to step 5		
	or b. If backup optics (COAS) sighting marks are desired, go to step 8		
	(Automatic Optics Positioning, R52)		
	5 OPT MODE - CMC	122	
	Poss PROG alarm Key V05 N09 (to verify alarm) 00407 (TA >50°)	2,140	
	a. RHC - manually maneuver to selected tracking attitude		Key V16 N22 for desired gimbal angles. Key V16 N92 for desired optics angles.
CDR	or b. SC CONT - CMC CMC MODE - AUTO	1	
CMP	Key V58E	2,140	
	(Rendezvous Tracking Sighting Mark Routine, R21)		To perform SCT sighting marks on LM.
	6 Key V57E		

STA/T	STEP	PROCEDURE	PANEL	REMARKS
	7	FL V51 (please mark)		
CMP		OPT MODE - MAN	122	
		OHC - center LM in SCT		
		MARK pb - push		
		Accept Repeat mark procedure		If more marks are desired.
		or PRO		If sufficient marks have been made.
		OPT MODE - CMC		
		Go to step 11		
		Reject MARK REJ pb - push		
		Repeat mark procedure		
		(Backup Rendezvous Tracking Sighting Mark Routine, R23)		To perform sighting marks on LM using backup optics (COAS).
	8	Key V54E	2,140	
	9	FL V06 N92		
		SA XXX.XX DEG		SA - Shaft angle (nominal = 00000)
		TA XX.XXX DEG		TA - Trunnion angle (nominal = 57470)
		Accept PRO		
		Reject Key V24E		
		Load desired data		
	10	FL V53 (request alt LOS mark)		
		RHC - Align LM in COAS		
		ENTR		Alternate LOS mark.
		Accept Repeat mark procedure		If more marks are desired.
		or PRO		If sufficient marks have been made.
		Reject V86E		Rejects previous mark.
		Repeat mark procedure		

STA/T STEP	PROCEDURE	PANEL	REMARKS
	(Rendezvous Tracking Data Processing Routine, R22)		
CMP 11	Poss FL V06 N49	2,140	Excessive update parameters.
	ΔR XXXX.X NM		
	ΔV XXXX.X FPS		
	Source code 0000X.		00001 = Optics (CMC does not differentiate between SXT and COAS marks)
			00002 = VHF ranging (not applicable to CSM 104)
	Accept PRO		Incorporates update data.
	Reject Key V32E		Does not incorporate update data.
12	To terminate P20 and all other programs running Key V37E 00E DSKY P00		
or	To terminate P20 only Key V56E FL V37		R00

STA/T	STEP	PROCEDURE		PANEL	REMARKS
		4.6.3 TRANSFER PHASE INITIATION (P34)			The purpose of this procedure is to: • Calculate required ΔV and other initial conditions required by CMC for CSM execution of TPI maneuver, given: a. Time of ignition, GETI (TPI), or elevation angle (E) of CSM/LM LOS at GETI (TPI). b. Central angle of transfer (CENTANG) of passive vehicle (LM) from GETI (TPI) to time of intercept. • Calculate GETI (TPI) given E or E given GETI (TPI). This procedure may be performed concurrently with P20 or independently. If P20 is operating, sighting marks on LM may be initiated by keying V57E (R21) or V54E (R23) at any flashing display in P34. For sighting mark procedures, refer to para 4.6.2, steps 5-7 and 8-10 respectively.
		CMC - on (required), para 4.10.1.2 ISS - on and orientation known (desired), para 4.10.1.2 & 4.11			Required for meaningful display of MGA during final display of N45 (step 8).
CMP	1	Key V37E 34E DSKY P34		2,140	
	2	FL V06 N37 GETI (TPI)	00XXX. HRS 000XX. MIN 0XX.XX SEC		

STA/T STEP	PROCEDURE	PANEL	REMARKS
CMP	Key V25E Load desired GETI (TPI) Record GETI (TPI) PRO	2,140	Load desired GETI (TPI) if CMC computation of E is desired. If it is desired that E be specified and CMC compute GETI (TPI), load an initial value for GETI (TPI). This value should be within 30 minutes of actual.
3	FL V06 N55		
	R2 E XXX.XX DEG		E - Elevation angle
	R3 CENTANG XXX.XX DEG		CENTANG - Central angle of passive vehicle (LM) from GETI (TPI) to time of intercept.
	Accept Record CENTANG and E PRO Go to step 8		
	Reject Key V22E Load desired E in R2		CMC computes GETI (TPI).
	or Load +00000 in R2 Key V23E Load desired CENTANG in R3		CMC computes E.
4	If E specified (CMC computes GETI)		
	Poss FL V05 N09 00611 (no GETI for given E) PRO Go to step 2 (adjust input parameters)		
	FL V06 N37 GETI (TPI) 00XXX. HRS 000XX. MIN 0XX.XX SEC		

STA/T STEP	PROCEDURE	PANEL	REMARKS
CMP	Record GETI (TPI) PRO Go to step 5	2,140	
or	If +00000 specified for E (CMC computes E) FL V06 N55 R2 E XXX.XX DEG R3 CENTANG XXX.XX DEG Record E and CENTANG PRO		To obtain central angle of active vehicle (CSM), key V06 N52.
5	FL V06 N58 Hp XXXX.X NM ΔV (TPI) XXXX.X FPS ΔV (TPF) XXXX.X FPS Record data PRO If not final pass, go to step 7		Hp - Altitude of perigee above launch pad radius. ΔV (TPI) - Required impulsive ΔV to accomplish TPI maneuver at GETI (TPI). ΔV (TPF) - Required impulsive ΔV to accomplish intercept maneuver (TPF) at calculated time of intercept.
6	FL V06 N81 (final pass only) ΔVX, Y, Z (lcl vert) XXXX.X FPS Accept Record ΔV (lcl vert) PRO Reject Key V25E Load desired ΔV (lcl vert)		ΔV (lcl vert) - Components of required impulsive ΔV in active vehicle (CSM) local vertical coordinates. To modify ΔV (lcl vert) to correct for out of planeness key V90E (R36). Use data obtained from R36 to determine desired ΔV (lcl vert).

STA/T	STEP	PROCEDURE		PANEL	REMARKS
CMP	7	FL V06 N59		2,140	
		ΔV 1, 2, 3 (LOS)	XXXX.X FPS		ΔV (LOS) - Components of required impulsive ΔV in an orthogonal coordinate system oriented along CSM to LM LOS. (For complete definition, refer to section 5.4.4.2 of R577, Vol I.)
		Record ΔV (LOS)			
		PRO			
	8	FL V16 N45			
		Mark ctrs	XXBXX MARKS		Mark ctrs - Number of marks processed by Rendezvous Data Processing Routine, R22. a. Two most significant digits - VHF ranging marks (not meaningful on SC 104). b. Two least significant digits - Optics marks (Either SXT or backup optics (COAS) marks).
		TF GETI (TPI)	XXBXX MIN-SEC		TF GETI (TPI) - Time from ignition. Max reading is 59B59. -, before; +, after.
		MGA	-0000X		MGA - Middle gimbal angle (yaw). -00001 for other than final pass. -00002 for final pass. +XXX.XX DEG for final pass and IMU aligned.
		a. To continue mark process Key V32E Return to step 4			
	or	b. To terminate mark process and do final pass through program PRO Return to step 4			
	or	c. After final pass through program PRO			
	9	FL V37			R00

STA/T	STEP	PROCEDURE	PANEL	REMARKS
		4.6.4 TRANSFER PHASE MIDCOURSE (P35)		The purpose of this procedure is to calculate required ΔV and other initial conditions required by the CMC for CSM execution of next midcourse correction of the transer phase. This procedure may be performed concurrently with P20 or independently. If P20 is operating, sighting marks on LM may be initiated by keying V57E (R21) or V54E (R23) at any flashing display in P35. For sighting mark procedures refer to para 4.6.2, steps 5-7 and 8-10 respectively.
		CMC - on (required), para 4.10.1.2 Program P34 - (completed), para 4.6.3		Time of intercept (computed and stored by P34) is required for computations in P35.
		ISS - on and orientation known (desired), para 4.10.1.2 & 4.11		Required for meaningful display of MGA during final display of N45 (step 4).
CMP	1	Key V37E 35E DSKY P35 Go to step 4	2,140	
	2	FL V06 N81 (final pass only) ΔV X, Y, Z (lcl vert) XXXX.X FPS		ΔV (lcl vert) - Components of required ΔV in active vehicle (CSM) local vertical coordinates.
		Accept Record ΔV (lcl vert) PRO		
		Reject Key V25E Load desired ΔV (lcl vert)		To modify ΔV (lcl vert) to correct for out of planeness key V90E (R36). Use data obtained from R36 to determine desired ΔV (lcl vert).

STA/T	STEP	PROCEDURE		PANEL	REMARKS
CMP	3	FL V06 N59		2,140	
		ΔV 1, 2, 3 (LOS)	XXXX.X FPS		ΔV (LOS) - Components of required impulsive ΔV in an orthogonal coordinate system oriented along the CSM to LM LOS. (For complete definition refer to GSOP section 5.4.4.4 of R577, Vol I.)
		Record ΔV (LOS) PRO			To obtain central angle of active vehicle (CSM) key V06 N52.
	4	FL V16 N45			
		Mark ctrs	XXBXX MARKS		Mark ctrs - Number of marks processed by Rendezvous Data Processing Routine, R22. a. Two most significant digits - VHF ranging marks (not meaningful on SC 104). b. Two least significant digits - Optics marks (either SXT or backup optics (COAS) marks).
		TF GETI (TPM)	XXBXX MIN-SEC		TF GETI (TPM) - Time from ignition. Max reading is 59B59. -, before; +, after.
		MGA	-0000X		MGA - Middle gimbal angle (yaw). -00001 for other than final pass. -00002 for final pass. +XXX.XX DEG for final pass and IMU aligned.
		a. To continue mark process Key V32E Return to step 3			
	or	b. To terminate mark procedure and do final pass through program PRO Return to step 2			
	or	c. After final pass through program PRO			
	5	FL V37			ROO

STA/T STEP	PROCEDURE	PANEL	REMARKS
	4.6.5 STABLE ORBIT RENDEZVOUS (P38)		The purpose of this procedure is to: • Calulate and display required ΔV and other initial conditions required by CMC for CSM execution of first phase of stable orbit rendezvous (SOR) maneuver, given: a. GETI (SOR) b. CENTANG - Angle of transfer of passive vehicle c. The offset of the stable orbit point specified as a distance (ΔR, step 5) along passive vehicle (LM) orbit. • Calculate and display required ΔV and other initial conditions required by the CMC for CSM execution of second phase of SOR maneuver, given: a. A respecification of GETI (SOR) based on TPF and any midcourse corrections performed in program P39. b. An optional respecification of CENTANG. • Store SOR phase 1 and 2 target parameters for use by desired thrusting program. This procedure may be performed concurrently with P20 or independently. If P20 is operating, sighting marks on the LM may be initiated by keying V57E (R21) or V54E (R23) at any flashing display in P38. For sighting mark procedures, refer to para 4.6.2, steps 5-7 and 8-10 respectively.
	CMC - on (required), para 4.10.1.2 ISS - on and orientation known (desired), para 4.10.1.2 & 4.11		Required for meaningful display of MGA during final display of N45 (step 9).

STA/T	STEP	PROCEDURE	PANEL	REMARKS
		P39 completed (required for phase 2 of P38), para 4.6.6		The option of selecting phase 1 or 2 computation is provided in step 4.
CMP	1	Key V37E 38E DSKY P38	2,140	
	2	FL V06 N33 GETI (SOR) 00XXX. HRS 000XX. MIN 0XX.XX SEC Accept Record GETI (SOR) PRO Reject Key V25E Load desired GETI (SOR)		
	3	FL V06 N55 R3 CENTANG XXX.XX DEG Accept Record CENTANG PRO Reject Key V23E Load desired CENTANG		CENTANG - Central angle of passive vehicle (LM) from GETI (SOR) to time of intercept.
	4	FL V04 N06 00005 (specify phase option) 0000X (1 - phase 1; 2 - phase 2)		

STA/T	STEP	PROCEDURE		PANEL	REMARKS
CMP		Accept PRO If option 2 specified, go to step 9 Reject Key V22E Load desired option		2,140	
	5	FL V06 N57 ΔR (SOR)	XXXX.X NM		ΔR (SOR) - The offset of the stable orbit point, specified as distance along passive vehicle (LM) orbit. +, SOR point behind LM; -, SOR point ahead of LM.
		Accept Record ΔR (SOR) PRO Reject Key V21E Load desired ΔR (SOR)			
	6	FL V06 N34 GET (FINAL)	00XXX. HRS 000XX. MIN 0XX.XX SEC		GET (FINAL) - Ground elapse time of arrival at stable orbit.
		Record GET (FINAL) PRO Go to step 9			
	7	FL V06 N58 Hp (SOR)	XXXX.X NM		Hp (SOR) - Altitude of perigee above launch pad radius.
		ΔV (SOR)	XXXX.X FPS		ΔV (SOR) - Required impulsive ΔV to accomplish SOR maneuver at GETI (SOR).
		ΔV (SOR-FINAL)	XXXX.X FPS		ΔV (SOR-FINAL) - Required impulsive ΔV to accomplish SOR maneuver at time of intercept.

STA/T STEP	PROCEDURE	PANEL	REMARKS
CMP	Record Data PRO	2,140	To obtain CSM central angle of transfer key V06 N52. If CSM central angle is between 170-190 degrees, reaccess input targeting parameters based on ΔV and GETI.
8	FL V06 N81 ΔV X, Y, Z (lcl vert) XXXX.X FPS		ΔV (lcl vert) - Components of required impulsive ΔV in CSM local vertical coordinates.
	Accept Record ΔV (lcl vert) PRO		
	Reject Key V25E Load desired ΔV (lcl vert)		To modify ΔV (lcl vert) to correct for out of planeness, key V90E (R36). Use data obtained from routine R36 to determine desired ΔV (lcl vert)
9	FL V16 N45 Mark ctrs XXBXX MARKS		Mark ctrs - Number of marks processed by Rendezvous Data Processing Routine, R22. a. Two most significant digits - VHF marks (not meaningful on SC 104). b. Two least significant digits - Optics marks (these marks may be either SXT or backup optics marks).
	TF GETI (SOR) XXBXX MIN-SEC		TF GETI (SOR) - Time from ignition. Max reading 59B59. -, before; +, after.
	MGA -0000X. or +XXX.XX DEG		MGA - Middle gimbal angle (yaw). -00001 for other than final pass through P38. -00002 for final pass and IMU not aligned. +XXX.XX DEG for final pass and IMU aligned.

STA/T STEP	PROCEDURE	PANEL	REMARKS
CMP	a. To continue mark process Key V32E Return to step 7	2,140	
	or b. To terminate mark process and do final pass through program PRO Return to step 7		
	or c. After final pass through program PRO		
10	FL V37		ROO

NORMAL/BACKUP

STA/T	STEP	PROCEDURE	PANEL	REMARKS
		4.6.6 STABLE ORBIT MIDCOURSE (P39)		The purpose of this procedure is to: • Calculate required ΔV and other initial conditions required by CMC for CSM execution of next possible midcourse correction of stable orbit transfer phase. • Compute and display suitable information to enable crew to enter final rendezvous phase at correct time to complete required thrusting maneuver. This procedure may be performed concurrently with P20 or independently. If P20 is operating, sighting marks on LM may be initiated by keying V57E (R21) or V54E (R23) at any flashing display in P39. For sighting mark procedures, refer to para 4.6.2, steps 5-7 and 8-10 respectively.
		CMC - on (required), para 4.10.1.2 ISS - on and orientation known (desired), para 4.10.1.2 & 4.11		To obtain CMC central angle of transfer, key V06 N52. Required for meaningful display of MGA during final display of N45.
		Program P38 - phase 1 completed, para 4.6.5		Time of intercept (computed and stored by P38) is required for computations in P39.
CMP	1	Key V37E 39E DSKY P39 Go to step 3	2,140	
	2	FL V06 N81 ΔV X, Y, Z (lcl vert) XXXX.X FPS Accept Record ΔV (lcl vert) PRO		ΔV (lcl vert) - Components of required impulsive ΔV in CSM local vertical coordinates.

STA/T STEP	PROCEDURE	PANEL	REMARKS
CMP	Reject Key V25E Load desired ΔV (lcl vert)	2,140	To modify ΔV (lcl vert) to correct for out of planeness key V90E (R36). Use data obtained from routine R36 to determine desired ΔV (lcl vert).
3	FL V16 N45 Mark ctrs XXBXX MARKS		Mark ctrs - Number of marks processed by R22. a. Two most significant digits - VHF marks (not meaningful on SC 104) b. Two least significant digits - Optics marks (these marks may be either SXT or backup optics marks).
	TF GETI (MID) XXBXX MIN-SEC		TF GETI (MID) - Computed from T now plus some stored value, A. This value may be changed by prelaunch erasable load or P27 CMC update. Max reading 59B59. -, before; +, after.
	MGA -0000X or +XXX.XX DEG		MGA - Middle gimbal angle -00001, for other than final pass through P39. -00002, for final pass and IMU not aligned. +XXX.XX DEG for final pass and IMU aligned.
	a. To continue mark process Key V32E Return to step 2		
	or b. To terminate mark process and do final pass through program PRO Return to step 2		
	or c. After final pass through program PRO		
4	FL V37		ROO

STA/T	STEP	PROCEDURE	PANEL	REMARKS
		4.6.7 LM TPI TARGETING (P74)		The purpose of this procedure is to: • Calculate required ΔV and other initial conditions required by the LGC for LM execution of TPI maneuver, given: a. Time of ignition, GETI (TPI), or the elevation angle (E) of LM/CSM, LOS at GETI (TPI). b. Central angle of transfer (CENTANG) of passive vehicle (CSM) form GETI (TPI) to time of intercept. • Calculate GETI (TPI) given E or E given GETI (TPI). This procedure may be performed concurrently with P20 or independently. If P20 is operating, sighting marks on the LM may be initiated by keying V57E (R21) or V54E (R23) at any flashing display in P74. For sighting mark procedures, refer to para 4.6.2, steps 5-7 and 8-10 respectively.
		CMC - on (required), para 4.10.1.2		
CMP	1	Key V37E 74E DSKY P74	2,140	
	2	FL V06 N37 GETI (TPI) 00XXX. HRS 000XX. MIN 0XX.XX SEC Key V25E Load desired GETI (TPI) Record GETI (TPI) PRO		Load desired GETI (TPI) if CMC computation of E is desired. If it is desired that E be specified and CMC compute GETI (TPI), load an initial value for GETI (TPI). This value should be within 30 minutes of actual.

STA/T	STEP	PROCEDURE	PANEL	REMARKS
CMP	3	FL V06 N55	2,140	
		R2 E XXX.XX DEG		E - Elevation angle.
		R3 CENTANG XXX.XX DEG		CENTANG - central angle of passive vehicle (CMC) from GETI (TPI) to time of intercept.
		Accept Record CENTANG and E PRO Go to step 8		
		Reject Key V22E Load desired E in R2		CMC computes GETI (TPI).
		or Load +00000 in R2 Key V23E Load desired CENTANG in R3		CMC computes E.
	4	If E specified (CMC computes GETI)		
		Poss FL V05 N09 00611 (no GETI for given E) PRO Go to step 2 (adjust input parameters)		
		FL V06 N37 GETI (TPI) 00XXX. HRS 000XX. MIN 0XX.XX SEC Record GETI (TPI) PRO Go to step 5		

STA/T STEP	PROCEDURE		PANEL	REMARKS
	or If +00000 specified for E (CMC computes E)			
CMP	FL V06 N55		2,140	To obtain central angle of active vehicle (LM), key V06 N52.
	R2 E	XXX.XX DEG		
	R3 CENTANG	XXX.XX DEG		
	Record E and CENTANG			
	PRO			
5	FL V06 N58			
	Hp	XXXX.X NM		Hp - Altitude of perigee above launch pad radius.
	ΔV (TPI)	XXXX.X FPS		ΔV (TPI) - Required impulsive ΔV to accomplish TPI maneuver at GETI (TPI).
	ΔV (TPF)	XXXX.X FPS		ΔV (TPF) - Required impulsive ΔV to accomplish intercept maneuver (TPF) at calculated time of intercept.
	Record data			
	PRO			
	IF not final pass, go to step 7			
6	FL V06 N81 (final pass only)			
	ΔV X, Y, Z (lcl vert)	XXXX.X FPS		ΔV (lcl vert) - Components of required impulsive ΔV in active vehicle (LM) local vertical coordinates.
	Accept Record ΔV (lcl vert)			
	PRO			
	Reject Key V25E			To modify ΔV (lcl vert) to correct for out of planeness key V90E (R36). In using data obtained from R36 to determine desired ΔV (lcl vert) it must be noted that R36 calculations assumes an active CSM.
	Load desired ΔV (lcl vert)			

STA/T	STEP	PROCEDURE		PANEL	REMARKS
CMP	7	FL V06 N59		2,140	
		ΔV 1, 2, 3 (LOS)	XXXX.X FPS		ΔV (LOS) - Components of required impulsive ΔV in an orthogonal coordinate system oriented along the LM to CSM LOS. (For complete definition refer to GSOP, section 5.4.4.2 of R577, Vol I.)
		Record ΔV (LOS) PRO			
	8	FL V16 N45			
		Mark ctrs	XXBXX MARKS		Mark ctrs - Number of marks processed by Rendezvous Data Processing Routine, R22. a. Two most significant digits - VHF ranging marks (not meaningful on SC 104). b. Two least significant digits - Optics marks (either SXT or backup optics (COAS) marks).
		TF GETI (TPI)	XXBXX MIN-SEC		TF GETI (TPI) - Time from ignition. Max reading is 59B59. -, before; +, after.
		MGA	-0000X		MGA - Middle gimbal angle (yaw). -00001 for other than final pass. -00002 for final pass.
		a. To continue mark process Key V32E Return to step 4			
	or	b. To terminate mark process and do final pass through program PRO Return to step 4			

STA/T	STEP	PROCEDURE	PANEL	REMARKS
CMP	or c.	After final pass through program	2,140	
		PRO Transmit all maneuver parameters to LM		
	9	FL V37		R00

STA/T	STEP	PROCEDURE	PANEL	REMARKS
	4.6.8	LM TRANSFER PHASE MIDCOURSE TARGETING (P75)		The purpose of this procedure is to calculate required ΔV and other initial conditions required by LGC for LM execution of next midcourse correction of transfer phase. This procedure may be performed concurrently with P20 or independently. If P20 is operating, sighting marks on LM may be initiated by keying V57E (R21) or V54E (R23) at any flashing display in P75. For sighting mark procedures refer to para 4.6.2, steps 5-7 and 8-10 respectively.
		CMC - on (required), para 4.10.1.2 Program P74 - completed, para 4.6.7		Time of intercept (computed and stored by P74) is required for computations in P75.
CMP	1	Key V37E 75E DSKY P75 Go to step 4	2,140	
	2	FL V06 N81 (final pass only) ΔVX, Y, Z (lcl vert) XXXX.X FPS		ΔV (lcl vert) - Components of required ΔV in active vehicle (LM) local vertical coordinates.
		Accept Record ΔV (lcl vert) PRO		
		Reject Key V25E Load desired ΔV (lcl vert)		To modify ΔV (lcl vert) to correct for out of planeness key V90E (R36). In using data obtained from R36 to determine desired ΔV (lcl vert) it must be noted that R36 calculations assume an active CSM.
	3	FL V06 N59 ΔV 1, 2, 3 (LOS) XXXX.X FPS		ΔV (LOS) - Components of required impulsive ΔV in an orthogonal coordinate system oriented along CSM to LM LOS. (For complete definition refer to GSOP section 5.4.4.4 of R577, Vol I.)
		Record ΔV (LOS) PRO		To obtain central angle of active vehicle (LM), Key V06 N52.

STA/T	STEP	PROCEDURE		PANEL	REMARKS
CMP	4	FL V16 N45		2,140	
		Mark ctrs	XXBXX MARKS		Mark ctrs - Number of marks processed by Rendezvous Data Processing Routine, R22. a. Two most significant digits - VHF ranging marks (not meaningful on SC 104). b. Two least significant digits - Optics marks (either SXT or backup optics (COAS) marks).
		TF GETI (TPM)	XXBXX MIN-SEC		TF GETI (TPM) - Time from ignition. Max reading is 59B59. -, before; +, after.
		MGA	-0000X		MGA - Middle gimbal angle (yaw). -00001 for other than final pass. -00002 for final pass.
		a. To continue mark process Key V32E Return to step 3			
	or	b. To terminate mark procedure and do final pass through program PRO Return to step 2			
	or	c. After final pass through program PRO Transmit all maneuver parameters to LM			
	5	FL V37			R00

STA/T	STEP	PROCEDURE	PANEL	REMARKS
		4.6.9 LM TPI SEARCH (P77) CMC - on (required), para 4.10.1.2		The purpose of this procedure is to: • Compute parameters associated with a minimum energy, safe periapsis transfer maneuver, and the resultant intercept, provided a GETI (TPI) by DSKY input. • Provide Astronaut with option of defining to CMC initial transfer trajectory search sector for central angle either > or <180° from position of active vehicle (LM) to GETI (TPI). • Display parameters associated with transfer (TPI and intercept). This procedure may be performed concurrently with P20 or independently. If P20 is operating, sighting marks on LM may be initiated by keying V57E (R21) or V54E (R23) at any flashing display in P77. For sighting mark procedures, refer to para 4.6.2, steps 5-7 and 8-10 respectively.
CMP	1	Key V37E 77E DSKY P77	2,140	
	2	FL V06 N37 GETI (TPI) 00XXX. HRS 000XX. MIN 0XX.XX SEC Accept Record GETI (TPI) PRO Reject Key V25E Load desired GETI (TPI)		

STA/T	STEP	PROCEDURE		PANEL	REMARKS
CMP	3	FL V06 N72		2,140	
		Δ ang (TPI)	XXX.XX DEG		Δ ang (TPI) - Central angle between vehicles at GETI (TPI). +, LM ahead; -, LM behind.
		Δ alt (TPI)	XXXX.X NM		Δ alt (TPI) - Magnitude of the altitude difference. +, CSM above; -, CSM below.
		Search option	0000X.		Search option - 00001 search for central angle <180°; 00002 search for central angle >180° (from LM at GETI (TPI) to intercept).
		Accept	Record data PRO		
		Reject	Key V32E Return to step 2 (to adjust GETI (TPI))		
		or	Key V23E Load desired search option		
			Poss FL V05 N09 XXXXX (alarm code) Key V32E		If no solution exists.
			Return to step 2		To adjust GETI (TPI) and/or search option.
	4	FL V06 N58			
		Hp	XXXX.X NM		Hp - Altitude of perigee above launch pad radius after TPI maneuver.
		ΔV (TPI)	XXXX.X FPS		ΔV (TPI) - Required impulsive ΔV to accomplish TPI maneuver at GETI (TPI).
		ΔV (TPF)	XXXX.X FPS		ΔV (TPF) - Required impulsive ΔV to accomplish intercept maneuver (TPF) at calculated time of intercept. +, LM ascending; -, LM descending.

STA/T STEP	PROCEDURE	PANEL	REMARKS
CMP	Accept Record data PRO Reject Key V32E Return to step 2 (to adjust GETI (TPI) and/or search option)	2,140	
5	FL V06 N55 R1 Per code 0000X		Per code - 00001, perigee between TPI and TPF. 00002, perigee after TPF.
	R3 CENTANG XXX.XX DEG		CENTANG - Central angle of CSM from GETI (TPI) to time of intercept.
	Accept Record data PRO Reject Key V32E Return to step 2 (adjust GETI (TPI) and/or search option)		
6	FL V37		R00

STA/T STEP	PROCEDURE	PANEL	REMARKS
4.6.10	LM STABLE ORBIT RENDEZVOUS TARGETING (P78) CMC - on (required), para 4.10.1.2 P79 completed (required for phase 2 of P78), para 4.6.11		The purpose of this procedure is to: • Calculate and display required ΔV and other initial conditions required by LGC for LM execution of first phase of stable orbit rendezvous (SOR) maneuver, given: a. GETI (SOR) b. CENTANG - Angle of Transfer of passive vehicle c. The offset of the stable orbit point specified as a distance (ΔR, step 5) along passive vehicle (CSM) orbit. • Calculate and display required ΔV and other initial conditions required by the LGC for execution of second phase of the SOR maneuver, given: a. A respecification of GETI (SOR) based on TPF and any midcourse corrections performed in program 79 b. An optional respecification of CENTANG. • Store SOR phases 1 and 2 target parameters for use by desired thrusting program. This procedure may be performed concurrently with P20 or independently. If P20 is operating, sighting marks on LM may be initiated by keying V57E (R21) or V54E (R23) at any flashing display in P78. For sighting mark procedures refer to para 4.6.2, steps 5-7 and 8-10 respectively. The option of selecting phase 1 or 2 computation is provided in step 4.

STA/T	STEP	PROCEDURE	PANEL	REMARKS
CMP	1	Key V37E 78E DSKY P78	2,140	
	2	FL V06 N33 GETI (SOR) 00XXX. HRS 000XX. MIN 0XX.XX SEC Accept Record GETI (SOR) PRO Reject Key V25E Load desired GETI (SOR)		
	3	FL V06 N55 R3 CENTANG XXX.XX DEG Accept Record CENTANG PRO Reject Key V23E Load desired CENTANG		CENTANG - Central angle of passive vehicle (CSM) from GETI (SOR) to time of intercept.
	4	FL V04 N06 00005 (specify phase option) 0000X (1 - phase 1; 2 - phase 2) Accept PRO If option 2 specified, go to step 9 Reject Key V22E Load desired option		

STA/T	STEP	PROCEDURE		PANEL	REMARKS
CMP	5	FL V06 N57		2,140	
		ΔR (SOR)	XXXX.X NM		ΔR (SOR) - The offset of the stable orbit point, specified as distance along passive vehicle (CSM) orbit. +, SOR point behind CSM; -, SOR point ahead of CSM.
		Accept Record ΔR (SOR) PRO			
		Reject Key V21E Load desired ΔR (SOR)			
	6	FL V06 N34			
		GET (FINAL)	00XXX. HRS 000XX. MIN 0XX.XX SEC		GET (FINAL) - Ground elapse time of arrival at stable orbit.
		Record GET (FINAL) PRO Go to step 9			
	7	FL V06 N58			
		Hp (SOR)	XXXX.X NM		Hp (SOR) - Altitude of perigee above launch pad radius
		ΔV (SOR)	XXXX.X FPS		ΔV (SOR) - Required impulsive ΔV to accomplish SOR maneuver at GETI (SOR).
		ΔV (SOR-FINAL)	XXXX.X FPS		ΔV (SOR-FINAL) - Required impulsive ΔV to accomplish SOR maneuver at time of intercept.
		Record data PRO			To obtain LM central angle of transfer key V06 N52. If between 170-190 degrees, reaccess the input targeting parameters based on ΔV and GETI.

STA/T	STEP	PROCEDURE	PANEL	REMARKS
CMP	8	FL V06 N81	2,140	
		ΔVX, Y, Z (lcl vert) XXXX.X FPS		ΔV (lcl vert) - Components of required impulsive ΔV in LM local vertical coordinates.
		Accept Record ΔV (lcl vert) PRO Reject Key V25E Load desired ΔV (lcl vert)		To modify ΔV (lcl vert) to correct for out of planeness, key V90E (R36). In using data obtained from routine R36 to determine desired ΔV (lcl vert), it must be noted that R36 calculations assumes an active CSM.
	9	FL V16 N45		
		Mark ctrs XXBXX MARKS		Mark ctrs - Number of marks processed by Rendezvous Data Processing Routine, R22. a. Two most significant digits - VHF marks (not meaningful on SC 104). b. Two least significant digits - Optics marks (these marks may be either SXT or backup optics marks).
		TF GETI (SOR) XXBXX MIN-SEC		TF GETI (SOR) - Time from ignition. Max reading 59B59. -, before; +, after.
		MGA -0000X. or +XXX.XX DEG		MGA - Middle gimbal angle (yaw). -00001 for other than final pass through P38. -00002 for final pass and IMU not aligned.
		a. To continue mark process Key V32E Return to step 7		
	or	b. To terminate mark process and do final pass through program PRO Return to step 7		

STA/T	STEP	PROCEDURE	PANEL	REMARKS
CMP or	c.	After final pass through program PRO Transmit all maneuver parameters to LM	2,140	
	10	FL V37		R00

STA/T	STEP	PROCEDURE	PANEL	REMARKS
	4.6.11	LM STABLE ORBIT MIDCOURSE TARGETING (P79)		The purpose of this procedure is to: • Calculate required ΔV and other initial conditions required by the LGC for LM execution of next possible midcourse correction of stable orbit transfer phase. • Compute and display suitable information to enable crew to enter final rendezvous phase at correct time to complete required thrusting maneuver. This procedure may be performed concurrently with P20 or independently. If P20 is operating, sighting marks on the LM may be initiated by keying V57E (R21) or V54E (R23) at any flashing display in P79. For sighting mark procedures refer to para 4.6.2, steps 5-7 and 8-10 respectively.
		CMC - on (required), para 4.10.1.2 Program P78 - phase 1 completed, para 4.6.10		To obtain LM central angle of transfer, key V06 N52. Time of intercept (computed and stored by P78) is required for computations in P79.
CMP	1	Key V37E 79E DSKY P79 Go to step 3	2,140	
	2	FL V06 N81 ΔVX, Y, Z (lcl vert) XXXX.X FPS		ΔV (lcl vert) = Components of required impulsive ΔV in LM local vertical coordinates.
		Accept Record ΔV (lcl vert) PRO Reject Key V25E Load desired ΔV (lcl vert)		To modify ΔV (lcl vert) to correct for out of planeness, key V90E (R36). In using data obtained from routine R36 to determine desired ΔV (lcl vert), it must be noted that R36 calculations assume an active CSM.

STA/T	STEP	PROCEDURE	PANEL	REMARKS
CMP	3	FL V16 N45	2,140	
		Mark ctrs XXBXX MARKS		Mark ctrs - Number of marks processed by R22. a. Two most significant digits - VHF marks (not meaningful on SC 104). b. Two least significant digits - Optics marks (these marks may be either SXT or backup optics marks).
		TF GETI (MID) XXBXX MIN-SEC		TF GETI (MID) - Computed from TNOW plus some stored value, A. This value may be changed by prelaunch erasable load or P27 CMC update. Max reading 59B59. -, before; +, after.
		MGA -0000X or +XXX.XX DEG		MGA - Middle gimbal angle -00001, for other than final pass through P39. -00002, for final pass and IMU not aligned.
		a. To continue mark process Key V32E Return to step 2		
or		b. To terminate mark process and do final pass through program PRO Return to step 2		
or		c. After final pass through program PRO Transmit all maneuver parameters to LM		
	4	FL V37		R00

STA/T	STEP	PROCEDURE	PANEL	REMARKS
		4.6.12 RENDEZVOUS PARAMETER DISPLAY #1 (R31)		The purpose of this procedure is to display CMC calculated rendezvous parameters (range, range rate, and theta).
		CMC - on (required), para 4.10.1.2 ISS - on and orientation known (required), para 4.10.1.2 & 4.11		Required for a meaningful display of theta.
CMP	1	Key V83E	2,140	Constraint: This routine should not be performed while average-g is operating. V83E should not be called in P40 after engine gimbal trim until termination of program, nor in P41 after maneuver to thrusting attitude until termination of program.
	2	FL V06 N54 (MON)		Display is updated at 2 second intervals.
		Range XXX.XX NM		Range and range rate are based on stored state vectors.
		Range rate XXXX.X FPS		(-) range rate indicates closing.
		Theta [Lcl Horiz/CSM +X (+Up)] XXX.XX DEG		Theta - Angle between CSM +X axis and the local horizontal plane. (+) indicates CSM +X axis is above the plane (0 to 360 DEG).
		PRO Return to program in progress		

STA/T STEP	PROCEDURE	PANEL	REMARKS
	4.6.13 CMC - TARGET DELTA V (R32)		This routine provides a means of inputting LM maneuver parameters in order that CMC may update its knowledge of LM state vector.
CMP	CMC - on (required), para 4.10.1.2	2,140	
	1 Key V84E		Constraint: R32 should not be called from P40 or P41 to avoid destroying TIG.
	2 FL V06 N84 (ΔV components) ΔVX, Y, Z (other vehicle) XXXX.X FPS Accept PRO Reject Key V25E Load desired data		
	3 FL V06 N33 GETI 00XXX. HRS 000XX. MIN 0XX.XX SEC Accept PRO Return to program in progress Reject Key V25E Load desired data		GETI - Ignition time of LM ΔV maneuver.

STA/T	STEP	PROCEDURE	PANEL	REMARKS
		4.6.14 RENDEZVOUS PARAMETER DISPLAY #2 (R34) CMC - on (required), para 4.10.1.2 ISS - on and orientation known (required), para 4.10.1.2 & 4.11		The purpose of this procedure is to display CMC calculated rendezvous parameters (range, range rate, and phi).
CMP	1	Key V85E	2,140	Constraint: This routine should not be performed while average-g is operating. V85E should not be called in P40 after the engine gimbal trim until termination of the program, nor in P41 after the maneuver to thrusting attitude until termination of the program.
	2	FL V06 N53 Range XXX.XX NM Range rate XXXX.X FPS Phi [Lcl Horiz/SLOS (+Up)] XXX.XX DEG PRO Return to program in progress		Display is updated at 0.5 second intervals. Range and range rate are computed based on stored LM and CSM state vectors. (-) range rate indicates closing. PHI - The angle between the local horizontal plane and the optics star line of sight at the present time. Plus (+) indicates SLOS is above the plane (0 to 360 DEG).

STA/T	STEP	PROCEDURE	PANEL	REMARKS
		4.6.15 RENDEZVOUS OUT OF PLANE DISPLAY (R36)		Displays CMC calculated rendezvous out of plane parameters (Y, YDOT, PSI).
		CMC - on (required), para 4.10.1.2		
CMP	1	Key V90E	2,140	
	2	FL V06 N16		
		GET Event 00XXX. HRS 000XX. MIN 0XX.XX SEC		GET Event - GET for which out of plane parameters are desired. (Present time is indicated by all zeroes.)
		Accept PRO Reject Key V25E Load desired GET Event		
	3	FL V06 N90 (rend out of plane param)		
		Y XXXX.X NM		Y - Distance along V X R of LM
		YDOT XXXX.X FPS		YDOT = Rate of change of Y. +, increasing; -, decreasing.
		PSI XXX.XX DEG		PSI - Angle between CSM orbital plane and the LOS to the LM projected into the horizontal plane.
		Accept PRO Exit R36 Reject Key V32E Return to step 2 (adjust GET event)		

STA/T	STEP	PROCEDURE	PANEL	REMARKS
		4.6.16 RENDEZVOUS FINAL ATTITUDE (R63)		The purpose of this procedure is to:
		CMC - on (required), para 4.10.1.2 ISS - on and orientation known (required), para 4.10.1.2 & 4.11 SCS - on (required), para 4.10.2.2 RCS DAP - load and activate (required), para 4.10.1.6 & 8		• Calculate final gimbal angles required to point either the CSM +X axis or the preferred tracking axis at the LM. • Provides auto maneuver to selected attitude by calling R60.
CMP	1	Key V37E 00E	2,140	R63 may be selected from P00 only.
	2	Select ISS Total Attitude Display, para 4.9.25		Both FDAI's are recommended so that either reference system (IMU or GDC) may be monitored. (The CMC attitude error and rate display are available.)
	3	Key V89E		
		Poss PROG alarm Key V05 N09 (to verify alarm) 00210 (ISS not on) or XXXXX (IMU orientation unknown)		Alarm occurs only if ISS is not on or IMU orientation is not known (R02).
		FL V37 Key XXE		Select program to turn on ISS or perform orientation determination.

STA/T	STEP	PROCEDURE	PANEL	REMARKS
CMP	4	FL V04 N06	2,140	
		Option code 00003		
		CMC assumed option 0000X		
		(00001 - Preferred; 00002 - +X axis)		
		Accept PRO		
		Reject Key V22E		
		Load desired option		
	5	FL V06 N18 (computed GMBL angles)		
		R, P, Y XXX.XX DEG		Computed required gimbal angles at selected tracking attitude (preferred or +X axis) if present IMU orientation is maintained.
		Accept PRO		
		Reject Key V32E (to update display)		
		or Key V34E (to terminate routine)		
		(Attitude Maneuver Routine, R60)		Provides maneuver (automatic or manual) to attitude selected in step 4.
	6	FL V50 N18 (CMC auto request)		
		R, P, Y XXX.XX DEG		Required gimbal angles.
CDR		Accept SC CONT - CMC	1	
		CMC MODE - AUTO		
CMP		PRO	2,140	
		Go to step 7		
		Reject Key V62E		Provides reference for manual maneuver.
		RHC - null FDAI error needles		

STA/T STEP	PROCEDURE	PANEL	REMARKS
CDR	or SC CONT - SCS (or CMC MODE other than AUTO)	1	Recomputes desired attitude without performing auto maneuver.
CMP	PRO (to update display) Recycle to step 6	2,140	
	or ENTR Exit R60		Terminates R60.
7	V06 N18 (auto maneuver) R, P, Y XXX.XX DEG Monitor auto maneuver on FDAI Return to step 6		

STA/T STEP	PROCEDURE	PANEL	REMARKS

4.7 SYSTEMS MANAGEMENT

Systems management is a compilation of procedures that are common to more than one mission phase. The procedures involve system monitoring, periodic checks, and unique functions of the following systems only: SPS, RCS, EPS, ECS, C&WS, T/C, and Mechanical. Systems integrated procedures for the pre-launch through postlanding phases will repeatedly reference the material contained in systems management.

4.7.1 SYSTEMS TEST INDICATOR READOUTS

A SYSTEMS TEST indicator and two selector switches (LEB-101) provide the crew with the capability of monitoring some of the systems measurements telemetered to MSFN. A chart for converting the SYSTEMS TEST indicator readings to measurement parameters is included in this paragraph. The measurements consist of the following:

- Fuel cells 1, 2, and 3 regulated N2, O2, and H2 pressures
- Fuel cells 1, 2, and 3 radiator outlet temperatures
- Battery vent manifold pressure
- Battery relay bus voltage
- CSM to LM power
- SPS oxidizer line temperature
- CM/RCS engine injector temperature
- Rendezvous radar transponder voltages and frequency lockup.

The following chart lists the positions of the SYSTEMS TEST switches (2), and the pertinent data available for each indicator readout.

SYS TEST Selector Switches (2)	SYS TEST Indicator				
	System			Nominal Range	
Position	Function	Measurement No.	Sensor Range	System	Display (Volts)
1A	FC 1 N2 REG PRESS	SC 2060 P	Zero/75 psia	49 - 58 psia	3.3 - 3.9
1B	FC 2 N2 REG PRESS	SC 2061 P	Zero/75 psia	49 - 58 psia	3.3 - 3.9
1C	FC 3 N2 REG PRESS	SC 2062 P	Zero/75 psia	49 - 58 psia	3.3 - 3.9
1D	FC 1 O2 REG PRESS	SC 2066 P	Zero/75 psia	57 - 69 psia	3.8 - 4.6
2A	FC 2 O2 REG PRESS	SC 2067 P	Zero/75 psia	57 - 69 psia	3.8 - 4.6
2B	FC 3 O2 REG PRESS	SC 2068 P	Zero/75 psia	57 - 69 psia	3.8 - 4.6
2C	FC 1 H2 REG PRESS	SC 2069 P	Zero/75 psia	56 - 68 psia	3.7 - 4.55
2D	FC 2 H2 REG PRESS	SC 2070 P	Zero/75 psia	56 - 68 psia	3.7 - 4.55
3A	FC 3 H2 REG PRESS	SC 2071 P	Zero/75 psia	56 - 68 psia	3.7 - 4.55
3B	FC 1 RAD OUT TEMP	SC 2087 T	-50/+300°F	-10 - +90°F	0.6 - 2.0
3C	FC 2 RAD OUT TEMP	SC 2088 T	-50/+300°F	-10 - +90°F	0.6 - 2.0
3D	FC 3 RAD OUT TEMP	SC 2089 T	-50/+300°F	-10 - +90°F	0.6 - 2.0
4A	BAT COMPARTMENT PRESS (MANIF)	CC 0188 P	Zero/18 psia	1 psia	0.2
4B	BAT RELAY BUS VDC	CC 0232 V	Zero/+45 vdc	25 - 36.5 vdc	3.7 - 4.1
4C	OPEN	NONE			
4D	LM POWER	CC 2962 C	Zero/10 amp	TBD	TBD
5A	SPS ENGINE OXIDIZER FEEDLINE TEMP	SP 0049 T	Zero/+200°F	+45 - +75°F	1.1 - 1.9

SYS TEST Selector Switches (2)	SYS TEST Indicator				
	System			Nominal Range	
Position	Function	Measurement No.	Sensor Range	System	Display (Volts)
5B	OPEN	NONE			
5C	CM/RCS -P ENG INJECTOR TEMP SYS 2	CR 2110 T	-50/+50°F	≥48°	≥4.9
5D	CM/RCS +Y ENG INJECTOR TEMP SYS 2	CR 2116 T	-50/+50°F	≥48°	≥4.9
6A	CM/RCS CCW ENG INJECTOR TEMP SYS 1	CR 2114 T	-50/+50°F	≥48°	≥4.9
6B	CM/RCS -P ENG INJECTOR TEMP SYS 1	CR 2100 T	-50/+50°F	≥48°	≥4.9
6C	CM/RCS -Y ENG INJECTOR TEMP SYS 1	CR 2103 T	-50/+50°F	≥48°	≥4.9
6D	CM/RCS CW ENG INJECTOR TEMP SYS 2	CR 2119 T	-50/+50°F	≥48°	≥4.9
XPNDR A	XMTR POWER - RRT	ST 0711 V	NONE	0 - 5 vdc	0 - 5
XPNDR B	RCVR AGC - RRT	ST 0710 V	NONE	0 - 5 vdc	0 - 5
XPNDR C	FREQUENCY LOCKUP - RRT	ST 0712 X	NONE	4.5±0.5 vdc	4.5±0.5
XPNDR D	RCVR AGC - RRT	ST 0719 V	NONE	0.0±0.1 vdc	0.0±0.1

STA/T STEP	PROCEDURE	PANEL	REMARKS
	4.7.2 PROPULSION SYSTEMS		
	Specific functions of the SPS and the two RCS subsystems must be monitored to assure operational readiness and capability. Functions requiring monitoring include helium tank pressures, temperature indications, propellant tank ullage pressures, and event indicator displays. The SPS and SM RCS monitoring checks will be performed at 4-hour intervals and after each SPS burn. In addition, the SM RCS monitoring check will be performed prior to each SPS burn. The CM RCS monitoring check will be performed at 12-hour intervals and prior to entry.		
	4.7.2.1 <u>SPS Monitoring Check</u>		
LMP	If last two burns during a 30-minute period <2 sec each Verify MSFN engine injector flange temp readout >35°F		Prevents possible engine chugging or failure; propellant may be frozen within injector.
	or Wait 3 hrs from last burn		
	SPS PRPLNT TK TEMP ind - +45 to +75°F If <45°F, SPS LINE HTRS - A If >75°F, SPS LINE HTRS - OFF	3	Use A/B position if double heater operation is required for temperature control.
	SPS PRESS IND sw - He, N2A, and N2B SPS PRPLNT TK PRESS ind He 3900 psia max N2A 2900 psia max N2B 2900 psia max		3900±300 at launch, decreases with burn periods. 2900 psia at 130°F, decreases with each burn. 2900 psia at 130°F, decreases with each burn.
	SPS PRESS IND sw - He SPS PRPLNT TK FUEL PRESS ind - 170-195 psia SPS PRPLNT TK OXID PRESS ind - 170-195 psia		Fuel and oxidizer tanks are pressurized with helium prior to launch.

STA/T	STEP	PROCEDURE	PANEL	REMARKS
		CAUTION ΔP between fuel and oxid should not exceed 15 psi during a burn or degraded performance, rough combustion, and/or engine failure may result.		
LMP		SPS ENG INJ VLV ind (4) - CLOSE	3	CLOSE position indicates eight propellant ball valves closed.
		SPS QTY % OXID ind - record SPS QTY % FUEL ind - record SPS QTY OXID UNBAL ind - record SPS He VLV (both) - AUTO SPS He VLV tb (both) - bp		Barber pole display indicates helium isolation valve closed.
	4.7.2.2	SM RCS Monitoring Check		
CMP		SM RCS He tb (8) - gray	2	Gray display indicates helium systems 1 & 2 isolation valves open.
		SM RCS PRIM PRPLNT tb (4) - gray SM RCS SEC PRPLNT tb (4) - gray		Gray displays indicate primary and secondary fuel and oxidizer isolation valves open.
		RCS IND sel - SM A, B, C, D Check Quads A, B, C, D SM RCS PKG TEMP ind - 75-205°F SM RCS He PRESS ind - record SM RCS IND sw - He TK TEMP SM RCS He TK TEMP ind - record		

STA/T STEP	PROCEDURE	PANEL	REMARKS
CMP	SM RCS IND sw - PRPLNT QTY SM RCS PRPLNT QTY ind - record SM RCS SEC FUEL PRESS ind - 178-192 psia (192-207 psia until jets fired after orbit insertion)	2	Primary fuel pressure readout for each quad until momentary OPEN position of SEC PRPLNT FUEL PRESS A (B,C,D) switch selected.
	When SEC FUEL PRESS ind <150 psia SEC PRPLNT FUEL PRESS A (B,C,D) - OPEN		Decrease in fuel pressure indicates primary fuel low. OPEN position is momentary.
	4.7.2.3 CM RCS Monitoring Check		
	CM RCS PRPLNT tb (both) - gray		Gray displays indicate the four CM RCS propellant isolation valves open. Barber pole display indicates at least one valve (fuel or oxidizer) closed in the particular system 1 or 2.
	RCS IND sel - CM 1, CM 2 CM RCS He TEMP ind - 60-90°F CM RCS He PRESS ind - 4000-4450 psia Prior to CM RCS activation CM RCS MANF PRESS ind - 25-200 psia		GSE servicing pressure will be monitored until system activated. Pressure excursions are a function of temperature and ullage variations.
	After CM RCS activation CM RCS MANF PRESS ind - 287-302 psia		

STA/T STEP	PROCEDURE	PANEL	REMARKS

4.7.3 ELECTRICAL POWER SYSTEM

EPS Management

The normal EPS configuration will be with two fuel cells on each main bus, e.g., FC 1 on MNA, FC 2 on MN A&B, and FC 3 on MNB. If one fuel cell is to be removed from the buses, one of two configurations may be assumed. The prime configuration, is one fuel cell per bus, for example; fuel cell 1 to main bus A and fuel cell 3 to main bus B. This configuration requires a dual inverter configuration and subsequent load balancing after fuel cell configuration has been established. The second configuration is to have the two fuel cells paralleled to the buses. This configuration should not be assumed unless equipment malfunction does not permit load balancing or one of the remaining fuel cells performance is degraded.

Standby operation (in-line heaters, reactants, pumps active) may be used when powering down the spacecraft, as a corrective action for fuel cell malfunctions, or in the event it is desired to hold a fuel cell in reserve for future use. Batteries and the remaining fuel cells should be normal when a fuel cell is placed on standby operation (open circuit). Inline heaters and pumps should not be turned off unless the fuel cell is to be shut down. If during the mission it becomes necessary to conserve cryogenics, electrical loads should be reduced which will in turn decrease the flow of cryogenics to the fuel cells. In an emergency situation, consideration may be given to deactivate a fuel cell (inline heaters, pumps, and loads off) to conserve cryogenics. During the deactive period, continuous monitoring of the fuel cell system will not necessarily assure a reactivation capability and there exists a possibility of complete loss of the fuel cell.

The prime inverter configuration is to have inverter 1 powering ac bus 1 and inverter 2 powering ac bus 2, with inverter 3 as backup. This configuration permits optimum bus isolation, however, reliability of the inverter permits single inverter operation to both ac buses if cryogenics are to be conserved.

Entry batteries A and B will normally supply main bus A and main bus B respectively with battery C as backup. The batteries (2) should be on during: countdown, lift-off, and all delta V maneuvers. Battery C will supply the buses prior to the deorbit burn and as required throughout the mission.

STA/T STEP	PROCEDURE	PANEL	REMARKS

Battery C will be connected to the buses as required to provide two battery configuration for delta V maneuvers when either battery A or B is being charged. All three batteries are to be used during the final deorbit burn.

Battery charging is required after peak power usage. The charging cycle may be terminated when the battery charger current indicated on the CHGR scale of the DC AMPS indicator is 0.4 amperes. The time required to reach the 0.4 ampere level is variable but can be predicted, roughly: The time required depends on amount of discharge, battery temperature, and the internal characteristics of the battery. If the charger current does not reach 0.4 amperes in the expected time for a given battery, transfer the charger to the remaining batteries. This procedure permits optimum battery capability for a given duration of time.

Batteries will be checked prior to each GO/NO-GO flight decision, prior to the deorbit burn and in routine periodic checks as required.

The onboard readout will be the prime readout throughout the EPS checks.

Fuel cell periodic verification consists of updating onboard data and comparing the respective fuel cell performance for a particular phase, with the established history of the powerplant.

Normal fuel cell purge requirements will be established inflight on the basis of pre-launch purity tests and elapsed amp-hours since previous purge. Purging will also be required just prior to GO/NO-GO flight decisions. Purging is accomplished by sequentially purging O2 (for 120 sec) then H2 (for 80 sec).

The time required for the H2 vent line heater activation prior to H2 purge has been set at 20 minutes. This time is flexible in that a purge may be attempted with less heater time (for example, a contingency corrective action) with no immediate adverse effect on the powerplant.

STA/T STEP	PROCEDURE	PANEL	REMARKS

Cryogenic System Operational Regions

There are four basic cyrogenic system operational regions based on control requirements. Quantity balance should be obtained by the end of Region I to assure optimum fluid quantity remaining in Regions III and IV. These regions and their respective quantity balance requirements are:

Region I - Automatic Control Region

Quanity balance correction is to be implemented at a 3 percent differential for hydrogen and for oxygen a differential from 2 percent to 4 percent. Unbalanced conditions of 5 percent for O_2 and 4 percent for H_2 should be avoided with a concerned effort.

Region II - Minimum dq/dm Region

Quantity balancing procedures should not be implemented in this region.

Region III - Post Minimum dq/dm Region

Quantity balancing correction should be implemented on the same basis as in Region I. Heaters and fans switches may be in either manual or AUTO, depending on balancing requirements.

Region IV - Terminal Region

Quantity balancing procedures should not be implemented.

STA/T	STEP	PROCEDURE	PANEL	REMARKS
	4.7.3.1	Cryogenic Pressure-Quantity Check		
CMP		CRYO TK H2 PRESS ind (both) - 225-260 psia	2	Indicates H2 tank 1 and 2 pressure.
		O2 PRESS IND sw - SURGE TANK		
		CRYO TK 1 O2 PRESS ind - 865-935 psia		Indicates surge tank O2 pressure.
		O2 PRESS IND sw - TANK 1		
		CRYO TK O2 PRESS ind (both) - 865-935 psia		Indicates O2 tank 1 and 2 pressure.
		CRYO TK H2 QTY ind (both) - record		Nominal per mission profile curve, 100% maximum indicates full tank (28 lbs each tank).
		CRYO TK O2 QTY ind (both) - record		Nominal per mission profile curve, 100% maximum indicates full tank (320 lbs each tank).
	4.7.3.2	FC Power Plant Check		
LMP		FC RAD tb (all) - gray	3	Gray displays indicate three fuel cell radiators, which can be bypassed, in use.
		FC HTRS (all) - on (up)		Enables electronic switches which automatically apply or remove power to FC heaters.
		FC REACS tb (all) - gray		Gray displays indicate FC reactant valves open.
		FC IND sel - 1, 2, 3		
		FC H2 FLOW ind - 0.03-0.10 lb/hr		Flow rate with no purging.
		FC O2 FLOW ind - 0.25-0.80 lb/hr		Flow rate with no purging.
		FC MOD SKIN TEMP ind - 390-450°F		
		FC MOD COND EXH TEMP ind - 150-175°F		
		FC tb (2) - gray		Gray displays indicate pH factor, and FC radiator temperatures normal.

STA/T STEP	PROCEDURE	PANEL	REMARKS
	4.7.3.3 D-C Voltage-Amperage Check		
LMP	MN BUS TIE (2) - OFF	5	
	FC MN BUS A tb (3) - FC 1 & 2 gray, FC 3 bp	3	Gray displays indicate fuel cells 1 and 2 connected to main bus A, and barber pole indicates FC 3 disconnected from main bus A.
	FC MN BUS B tb (3) - FC 1 bp FC 2 & 3 gray		Barber pole display indicates fuel cell 1 disconnected from main bus B, and gray displays indicate fuel cells 2 and 3 connected to main bus B.
	DC IND sel - FUEL CELL 1, 2, 3 DC AMPS ind - record		Record dc amps for each FC.
	DC IND sel - MAIN BUS A, B DC VOLTS ind - 26.5-31 vdc (record)		Record dc volts for main buses A and B.
	DC IND sel - BAT BUS A, B, & BAT C DC VOLTS ind - 34-38 vdc DC AMPS ind - <3.0 amps		Voltage indication may be different than shown when charging battery.
CMP	SYS TEST (2) - 4B SYS TEST ind - 3.7-4.1 vdc	101	Verifies battery relay bus voltage 25-36.5 vdc and verifies system test indicator. Perform if convenient.
	CAUTION Do not leave DC IND sel at PYRO BAT A (B) position any longer than required to read DC VOLTS or PYRO battery charge will be depleted.		

STA/T STEP	PROCEDURE	PANEL	REMARKS
LMP	DC IND sel - PYRO BAT A, B	3	Check pyro batteries A and B once every 24 hours.
	DC VOLTS ind - 37.0-37.5 vdc		
	DC IND sel - MAIN BUS A		
	4.7.3.4 A-C Voltage Check		
	AC IND sel - BUS 1, 2, ϕA, B, C		
	AC VOLTS ind - 113-117 vac		
	4.7.3.5 Battery Charging		
	MN BUS TIE (2) - OFF	5	Placing MN BUS TIE switches at OFF completes circuit from charger to selected battery, and disconnects battery from main bus.
	cb PYRO A TIE TO BAT BUS A - open	250	
	cb PYRO B TIE TO BAT BUS B - open		
	cb BAT C TO BAT BUS A - open		
	cb BAT C TO BAT BUS B - open		
	cb BAT RLY BUS BAT A (B) - open	5	
	DC IND sel - BAT CHARGER	3	
	BAT CHARGE - A, B, or C		If dc volts <37.5 or dc amps >2.0, transfer charger to remaining batteries. After remaining batteries are charged, return charger to affected battery.
	DC VOLTS ind - 37.5-40 vdc		
	DC AMPS ind - 2.0-0.4 amps		It may take up to 10 min for charger current to reach max level, depending on discharged state of battery.
	BAT CHARGE - OFF (at 0.4 amp or less)		
	cb BAT RLY BUS BAT A (B) - close	5	
	DC IND sel - MAIN BUS A	3	

STA/T STEP	PROCEDURE	PANEL	REMARKS
	4.7.3.6 Fuel Cell Power Plant Purging		Refer to purge information at beginning of para 4.7.3.
LMP	a. 02 purging FC IND sel - 1, 2, or 3 FC 1, 2, or 3 PURG - 02 (2 min) FC 02 FLOW ind - flow increases 0.6 lb/hr	3	Purging is performed as determined by real time decision. The 02 flow rate will increase by 0.6 lb/hr. This may cause FC 02 FLOW indicator to exceed its normal limits and activate MASTER ALARM pb/lt (3) and FC 1 (2 or 3) lt. Alarm limits may be checked by monitoring FC 02 FLOW indicator at the moment C/W lt comes on. • If normal 02 flow is at lowest limits, purging 02 side of fuel cell will not cause MASTER ALARM pb/lt to come on.
	FC 1, 2, or 3 PURG - OFF		
	b. H2 purging H2 PURG LINE HTR - on (up), 20 min prior to purge		Refer to purge information at beginning of para 4.7.3. Purging is performed as determined by real time decision.
	FC IND sel - 1, 2, or 3 FC 1, 2, or 3 PURG - H2 (1 min, 20 sec) FC H2 FLOW ind - flow increases 0.67 lb/hr		H2 flow rate will increase by 0.67 lb/hr. This will cause FC H2 FLOW indicator to exceed its normal limits, and activate MASTER ALARM pb/lt (3) and FC 1 (2 or 3) lt.
	FC 1, 2, or 3 PURG - OFF H2 PURG LINE HTR - OFF		

NORMAL/BACKUP

STA/T	STEP	PROCEDURE	PANEL	REMARKS
	4.7.3.7	H2 or O2 Quantity Balance Correction		Refer to quantity balance information at beginning of para 4.7.3.
		On low quantity tank		
CMP		H2 or O2 HTRS - off (center)	2	
		When tank quantity balanced		
		H2 or O2 HTRS - AUTO		
LMP	4.7.3.8	Fuel Cell Load Disconnect (Example using FC 2)		This procedure is presented with the following assumptions:
				FC 1 powering d-c main bus A. FC 2 powering d-c main buses A & B. FC 3 powering d-c main bus B.
		a. Prior to disconnect		
		Insure that at least one fuel cell is powering each main bus		
		Fuel cell disconnect		
		(1) Prime configuration		Requires load balancing.
		FC 2 MN BUS A - OFF	3	
		FC 2 MN BUS B - OFF		FC 2 now disconnected from both d-c main buses.
		FC 2 MN BUS A & B tb (2) - bp		FC 1 powering d-c main bus A, and FC 3 powering d-c main bus B. Barber poles indicate FC 2 disconnected from main bus A and main bus B.
		FC 1 MN BUS A tb - gray		Gray display indicates fuel cell 1 connected to main bus A.
		FC 1 MN BUS B tb - bp		Barber pole indicates fuel cell 1 disconnected from main bus B.
		FC 3 MN BUS A tb - bp		Barber pole indicates fuel cell 3 disconnected from main bus A.
		FC 3 MN BUS B tb - gray		Gray display indicates fuel cell 3 connected to main bus B.

STA/T STEP	PROCEDURE	PANEL	REMARKS
LMP	(2) Secondary configuration	3	This configuration assumed if load balancing cannot be obtained.
	FC 1 MN BUS B - on (up)		On position is momentary.
	FC 3 MN BUS A - on (up)		On position is momentary.
	FC 2 MN BUS A - OFF		
	FC 2 MN BUS B - OFF		FC 2 disconnected from both d-c main buses. FC 1 and FC 3 paralleled to both d-c main buses.
	FC 1 MN BUS A & B tb (2) - gray		Gray displays indicate fuel cell 1 connected to main bus A and B.
	FC 3 MN BUS A & B tb (2) - gray		Gray displays indicate fuel cell 3 connected to main bus A and B.
	FC 2 MN BUS A & B tb (2) - bp		Barber poles indicate fuel cell 2 disconnected from main bus A and B.
	b. Connect desired FC to desired main bus		
	Fuel cell to bus connection		
	FC 2 MN BUS B - on (up)		On position is momentary.
	FC 2 MN BUS A - on (up)		On position is momentary.
	FC 1 MN BUS B - OFF		
	FC 3 MN BUS A - OFF		Fuel cells returned to normal configuration (FC 1 powering d-c main bus A, FC 2 powering d-c main bus A & B, and FC 3 powering d-c main bus B).
	FC 2 MN BUS A & B tb (2) - gray		Gray displays indicate fuel cell 2 connected to main bus A and B.
	FC 1 MN BUS A tb - gray		Gray display indicates fuel cell 1 connected to main bus A.

STA/T STEP	PROCEDURE	PANEL	REMARKS
LMP	FC 1 MN BUS B tb - bp	3	Barber pole indicates fuel cell 1 disconnected from main bus B.
	FC 3 MN BUS A tb - bp		Barber pole indicates fuel cell 3 disconnected from main bus A.
	FC 3 MN BUS B tb - gray		Gray indicates fuel cell 3 connected to main bus B.
	4.7.3.9 Inverter Changeover WARNING • Insure at least one inverter on each a-c bus at all times (if available). • Loss of a-c power will result if two or more inverter a-c bus ties for the same bus are on simultaneously.		Normal operation throughout mission will be with 2 inverters operating. During drifting flight, a single inverter is adequate to power both a-c buses; however, two-inverter operation is assumed, providing maximum bus isolation.
	a. Dual inverter (No. 1 and 2) operation AC BUS 2 RSET - OFF		This procedure presented with assumption that inverter 1 powering a-c bus No. 1 and No. 2.
	AC INV 2 - MNB AC INV 1 AC BUS 2 - OFF AC INV 2 AC BUS 2 - on (up)		During dual inverter operation, inverter connected to d-c main bus A should always power a-c bus 1 and inverter connected to d-c main bus B should always power a-c bus 2, to preclude loss of all a-c and d-c power to SCS in event of single d-c main bus failure.
	AC BUS 2 RSET - RESET		RESET position is momentary.

STA/T STEP	PROCEDURE	PANEL	REMARKS
ALL	MASTER ALARM pb/lt - on MASTER ALARM pb/lt - push MASTER ALARM pb/lt - off	1,3,122	Placing AC BUS 1 or 2 RSET switch to RESET and releasing insures a MASTER ALARM pb/lt - on. Placing AC BUS 1 or 2 RSET to center will cause random activation of MASTER ALARM pb/lt.
CMP	C/W lt (all) - off	2	
			Inverter 1 now powering a-c bus No. 1 and inverter 2 powering a-c bus No. 2.
LMP	Perform A-C Voltage Check, para 4.7.3.4		
	b. Single inverter operation		This procedure presented with assumption that inverter 1 powering a-c bus No. 1 and inverter 2 powering a-c bus No. 2.
	AC BUS 2 RSET - OFF	3	
	AC INV 2 - OFF		
	AC INV 2 AC BUS 2 - OFF		
	AC INV 1 AC BUS 2 - on (up)		
	AC BUS 2 RSET - RESET		RESET position is momentary.
ALL	MASTER ALARM pb/lt - on MASTER ALARM pb/lt - push MASTER ALARM pb/lt - off	1,3,122	Placing AC BUS 1 or 2 RSET switch to RESET and releasing insures a MASTER ALARM pb/lt - on. Placing AC BUS 1 or 2 RSET to center will cause random activation of MASTER ALARM pb/lt.
CMP	C/W lt (all) - off	2	
			Inverter 1 now powering a-c bus No. 1 and a-c bus No. 2.
LMP	Perform A-C Voltage Check, para 4.7.3.4		
	c. Standby inverter (No. 3) check		This procedure presented with assumption that inverter No. 1 powering a-c bus No. 1 and inverter No. 2 powering a-c bus 2.
	AC BUS 2 RSET - OFF	3	

STA/T STEP	PROCEDURE	PANEL	REMARKS
LMP	AC INV 3 - MNB	3	
	AC INV 2 AC BUS 2 - OFF		
	AC INV 3 AC BUS 2 - on (up)		
	AC BUS 2 RSET - RESET		RESET position is momentary.
ALL	MASTER ALARM pb/lt - on	1,3,122	Placing AC BUS 1 or 2 RSET switch to RESET and releasing insures a MASTER ALARM pb/lt - on. Placing AC BUS 1 or 2 RSET to center will cause random activation of MASTER ALARM pb/lt.
	MASTER ALARM pb/lt - push		
	MASTER ALARM pb/lt - off		
CMP	C/W lt (all) - off	2	
LMP	Perform A-C Voltage Check, para 4.7.3.4		Standby inverter (No. 3) check should be performed every 24 hours.

STA/T STEP	PROCEDURE	PANEL	REMARKS

4.7.4 ENVIRONMENTAL CONTROL SYSTEM

ECS systems management procedures are divided into two categories. The first category consists of five procedures, described in steps 1 through 5, that are conducted at specific time intervals.

1. An ECS monitoring check is recommended every hour from the time the S/C attains orbit until CSM separation. This check provides the crew with the latest status of the ECS.

2. A redundant component check is accomplished at 24-hour intervals to determine the operational status of certain ECS redundant components and the secondary water-glycol loop. The test will reveal any inoperative or malfunctioning components that might have been selected for use later in the mission. Several redundant components are not checked, however, because of excessive use of oxygen, a means of selection not incorporated, or lack of direct indication.

3. Replacement of one CO_2-odor absorber filter is required on an alternate basis, at 12-hour intervals, for the ECS to remain within the prescribed metabolic limit. Filters are also changed if CO_2 partial pressure exceeds 7.6 mm Hg.

4. It is recommended that at 24-hour intervals the debris screens on the suit circuit return valve and at the inlet to the cabin heat exchanger be checked and cleaned as necessary.

5. It is recommended that chlorine and a buffer agent be independently injected into the potable water supply every 24 hours to maintain potability. There is a 10-ampoule supply of each chemical on the spacecraft.

The second category consists of procedures, described in steps 1 through 11 that are accomplished at random intervals or only as required.

1. PGA mode changes require certain precautions to be taken regarding suit power switch settings, communication functions and ECS adjustments. This applies whether the mode change is from PGA-to-shirtsleeve, shirtsleeve-to-PGA, or full PGA to partially suited mode. Also specified is a configuration for extra vehicular activities (EVA).

STA/T STEP	PROCEDURE	PANEL	REMARKS

2. Waste management procedures provide the steps necessary for the collection, removal, and disposition of waste products (except perspiration and respiration) resulting from normal body functions. Collection and disposition of emesis, and the retrieval of solid matter within the CM are also covered.

3. Procedures are provided to repressurize the CM cabin to 5 psia following depressurization for any reason, including lone crewman operations.

4. A verification of the PGA is carried out each time a crewman dons his suit. Although only one crewman may be returning to the suited mode, all those already suited will be subjected to the PGA verification. The verification is also performed prior to S-IVB separation, SPS burns, intra vehicular transfer (IVT) cabin pressure dumping, EVA, and deorbit. Also defined are lone crewman operations associated with IVT and EVA.

5. A hand-held hygrometer assembly and a conversion chart is used by the crew to determine the relative humidity. No built-in measurement system is incorporated in the ECS. Humidity is to be assessed every 6 hours or whenever condensation is evident.

6. The CM oxygen supply, represented by the surge tank and the repressurization tanks (3), requires replenishment after cabin repressurization. The procedures represent three crewman, as well as lone crewman operations.

7. The cabin pressure dump procedures are utilized during EVA. The procedures represent alternate methods of performing the dump operation; that is, either via the cabin pressure relief valve or the unified hatch valve. The procedures also consider either three-crewman or lone-crewman conditions.

8. The suit circuit must be purged of accumulated hydrogen once every 6 hours when all crewman are suited and the suit circuit is isolated from the cabin.

9. The cabin cold-soak operation is recommended for any period for which a cooler cabin is desirable, provided water consumption is compatible with water management, and radiator outlet temperature is greater than 0°F. The procedure may commence 8 to 12 hours prior to entry if a safety margin for entry is deemed advisable. Primary and secondary radiator loops are not to be operated simultaneously.

10. The CM/LM pressure equalization procedure will normally be used to support initial hard docking and LM withdrawal and intervehicular crew transfer from either the CM or LM vehicles.

STA/T STEP	PROCEDURE	PANEL	REMARKS
	11. A tunnel pressure integrity check is normally performed after the CM/LM pressure equalization procedures to verify the tunnel pressure seal between the vehicles.		
	4.7.4.1 <u>ECS Monitoring Check</u>		
LMP	SUIT CAB ΔP ind - 0.0 in. H20	2	
	O2 FLOW ind - 0.2-0.45 lb/hr		
	O2 PRESS IND sw - SURGE TANK		
	CRYO TK 1 O2 PRESS ind - 865-935 psia		
	O2 PRESS IND sw - TANK 1		
	ECS RAD tb - gray		Gray indicates No. 1 flow proportioning valve is controlling flow.
	ECS IND sel - PRIM		
	ECS RAD PRIM IN TEMP ind - 65-105°F		
	ECS RAD PRIM OUT TEMP ind - -20 to +102°F		
	GLY EVAP PRIM OUT TEMP ind - 40-50.5°F		
	GLY EVAP PRIM STM PRESS ind - 0.097-0.135 psia		
	GLY DISCH PRIM PRESS ind - 40-52 psig		
	SUIT TEMP ind - 45-55°F		
	CAB TEMP ind - 70-80°F		
	SUIT PRESS ind - 4.7-5.3 psia		
	CAB PRESS ind - 4.8-5.2 psia		
	PART CO2 PRESS ind - <7.6 mm Hg		
	SUIT COMPR P ind - 0.3-0.4 psi		
	ACCUM PRIM QTY ind - 30-70%		
	If quantity <30%		
CMP,LMP	PRIM ACCUM FILL vlv - ON until 40-70% is reached	2,379	
LMP	H20 QTY IND sw - POT	2	
	H20 QTY ind - 10-100%		
	H20 QTY IND sw - WASTE		
	H20 QTY ind - 20-100%		

NORMAL/BACKUP

STA/T	STEP	PROCEDURE	PANEL	REMARKS
	4.7.4.2	ECS Redundant Component Check		
LMP	1	ECS IND sel - PRIM	2	
	2	Suit compressor		
		SUIT COMPR (both) - redundant compressor	4	
		SUIT COMPR ΔP ind - 0.3-0.4 psi	2	
	3	Suit demand regulators		
CDR		02 DEMAND REG vlv - 1	380	PGA verification may be performed at this time.
		SUIT TEST vlv - PRESS		Valve in PRESS position only long enough to verify No. 1 (or 2) demand regulator.
LMP		02 FLOW ind - increase	2	
ALL		PGAs inflate (if suited)		
CDR		SUIT TEST vlv - DEPRESS	380	
LMP		02 FLOW ind - 0.2-0.45 lb/hr	2	
ALL		PGAs deflate to normal (if suited)		
		WARNING Do not place SUIT TEST valve to OFF until suit pressure and cabin pressure equalize, as crew discomfort or possible injury may result.		
CDR		SUIT TEST vlv - OFF	380	
		Repeat for 02 DEMAND REG vlv - 2		
		02 DEMAND REG vlv - BOTH (at completion)		

STA/T	STEP	PROCEDURE	PANEL	REMARKS
	4	Main O2 regulators		
CMP		MAIN REG B vlv - close	351	
		EMER CAB PRESS vlv - 1		
		EMER CAB PRESS TO TEST pb - push		Press-to-test pushbutton held only long enough to obtain momentary high flow.
LMP		O2 FLOW ind - momentary increase	2	
		O2 press - 90-110 psig (from MSFN)		Oxygen pressure is telemetered only.
CMP		MAIN REG B vlv - OPEN	351	
		MAIN REG A vlv - close		
		EMER CAB PRESS vlv - 2		
		EMER CAB PRESS TO TEST pb - push		Press-to-test pushbutton held only long enough to obtain momentary high flow.
LMP		O2 FLOW ind - momentary increase	2	
		O2 press - 90-110 psig (from MSFN)		
CMP		MAIN REG A vlv - OPEN	351	
		EMER CAB PRESS vlv - BOTH (OFF if all crewmen suited)		
	5	H20 accumulators		
LMP		SUIT CKT H20 ACCUM AUTO - redundant accum	2	
		O2 FLOW ind - monitor for momentary (10 sec) increase		Allow up to 10 minutes for accumulator stroking.
	6	Urine dump nozzle heaters		
CMP		WASTE H20 DUMP - redundant heater	101	
		UR DUMP - redundant heater		
		MSFN reports no significant change in urine and water dump nozzle temperatures		Nozzle temperatures telemetered only. Temperature decrease indicates heater failure; however, if nozzles are facing sun, decrease may not be immediate.

STA/T	STEP	PROCEDURE	PANEL	REMARKS
CMP	7	Open coolant control attenuation panel		Covers panel 382.
		WARNING SUIT FLOW RELF valve must remain OFF throughout mission or swelling of CO2 odor absorber filters may result.		
	8	Secondary glycol loop		DSE, SCE, and G&N are not coldplated. Usage time for non-coldplated items is as follows: DSE: 20 minutes ON, 30 minutes OFF. SCE: 20 minutes ON, 40 minutes OFF. G&N: 1.9 hours ON, 11.1 hours OFF.
		EVAP H20 CONT SEC vlv - AUTO	382	
LMP		ECS IND sel - SEC	2	
		GLY EVAP STM PRESS AUTO - MAN		
		GLY EVAP STM PRESS INCR - INCR for 45 sec min		Steam pressure valve requires 36 seconds from full open to full closed. INCR position is momentary.
		ECS RAD PRIM HTR - off (center)		
		ECS GLY PUMPS - OFF	4	
		SEC COOL LOOP PUMP - AC 1	2	
		GLY DISCH SEC PRESS ind - 39-51 psig		
		ACCUM SEC QTY ind - 30-70%		
		ECS RAD SEC HTR - SEC		
		SEC COOL LOOP EVAP - EVAP		
		After 5 minutes		Allow 5 minutes of glycol circulation before reading temperature indicators.
		ECS RAD SEC IN TEMP ind - 65-102°F		
		ECS RAD SEC OUT TEMP ind - 40-102°F		
		GLY EVAP SEC OUT TEMP ind - 40-50.5°F		
		SEC COOL LOOP PUMP - AC 2		

STA/T	STEP	PROCEDURE	PANEL	REMARKS
LMP		GLY DISCH SEC PRESS ind - 39-51 psig	2	
		SEC COOL LOOP EVAP - RESET for 45 sec min, then off (center)		RESET closes steam pressure control valve. Steam pressure valve requires 36 seconds from full open to full close.
		ECS RAD SEC HTR - OFF		
		ECS IND sel - PRIM		
		SEC COOL LOOP PUMP - off (center)		
CMP		EVAP H20 CONT SEC vlv - OFF	382	
	9	Close coolant control attenuation panel		
	10	Primary glycol pumps		
LMP		ECS GLY PUMPS - redundant pump	4	Switch to pump opposite that on at beginning of test. This verifies primary loop pump operation.
		GLY DISCH PRIM PRESS ind - 40-52 psig	2	
		ACCUM PRIM QTY ind - 30-70%		
		GLY EVAP STM PRESS AUTO - AUTO		
	11	Radiator heaters		
		ECS RAD PRIM HTR - redundant heater		Switch to heater opposite that on at beginning of test. "On" time of heater is function of radiator outlet temperature and cyclic in nature. Verification requires radiator outlet temperature at -15°F.

STA/T STEP	PROCEDURE	PANEL	REMARKS
	4.7.4.3 CO2 Absorber Filter Replacement		
CMP	Obtain unused filter		

Filter No.	Stowage Container	Filter No.	Stowage Container
1	Canister A	12	B6
2	Canister B	13	B6
3	A3	14	B6
4	A3	15	A2
5	A3	16	A2
6	A3	17	A2
7	B5	18	A2
8	B5	19	A6
9	B5	20	A6
10	B5	21	A6
11	B6	22	A6

Open CO2 canister attenuation panel CO2 cstr divert vlv - A (or B)	350	Handle placed up for canister B filter change, down for canister A filter change.
Canister manual bleed valve - press Cover latching handle - unlock Replace used filter Cover latching handle - lock CO2 cstr divert vlv - both (center) Close CO2 canister attenuation panel Stow used filter		

STA/T	STEP	PROCEDURE	PANEL	REMARKS
	4.7.4.4	Debris Screen Check		Lint or other debris on screens may reduce flow substantially.
CMP		Check cabin ht exch inlet screen Open coolant control attenuation panel		Covers panel 382 and SUIT CKT RET VLV screen.
		WARNING SUIT FLOW RELF valve must remain OFF throughout mission or swelling of CO2 odor absorber filters may result.		
CDR		Check SUIT CKT RET VLV screen If debris is present:		
LMP		CAB FAN (both) - OFF	2	
CDR		SUIT CKT RET VLV - PUSH TO CLOSE	380	
		Clean screens, Waste Management procedure b, para 4.7.4.7		
		SUIT CKT RET VLV - PULL TO OPEN		
LMP		CAB FAN (both) - on (up)	2	
CMP		Close coolant control attenuation panel		
	4.7.4.5	Potable Water Chlorination - TBD		
	4.7.4.6	PGA Mode Changes		
		a. Shirtsleeve Configuration		
		EMER CAB PRESS vlv - BOTH	351	
ALL		02 hoses disconnected at PGA and coupling inserted in return hose		
		Suit flow vlv - CABIN FLOW (for unsuited crewman)	300,301,302	

STA/T STEP	PROCEDURE	PANEL	REMARKS
CDR	SUIT CKT RET VLV - PULL TO OPEN	380	
ALL	SUIT PWR - OFF	9,10,6	
	PWR - OFF		
	AUDIO CONT - NORM (verify)		
	WARNING If comm umbilical is to be disconnected at bulkhead or control head, VHF AM switch on associated panel must be placed OFF.		
	Disconnect comm control head from PGA		
	Obtain CWG adapter		Stowage location is volume P-8, RHEB.
	Connect comm control head to CWG adapter		Although these are communication functions, they are included here for purpose of continuity in completing shirtsleeve mode.
	Connect CWG adapter to biomed and comm carrier set connectors		
LMP	cb VHF CREW AUDIO CTR - close	225	
ALL	Audio panel switches - as desired	9,10,6	
	b. PGA Configuration		
	SUIT PWR - OFF		
	PWR - OFF		
	AUDIO CONT - NORM (verify)		

STA/T STEP	PROCEDURE	PANEL	REMARKS
	WARNING If comm umbilical is to be disconnected at bulkhead or control head, VHF AM switch on associated panel must be placed OFF.		
ALL	Remove coupling from 02 return hose and connect hoses to PGA		
CDR	SUIT CKT RET VLV - PUSH TO CLOSE (if all suited)	380	
ALL	Suit flow vlv - SUIT FULL FLOW (for suited crewman)	300,301,302	
CMP	EMER CAB PRESS vlv - OFF (if all suited)	351	
ALL	Disconnect comm control head from CWG adapter Disconnect CWG adapter from biomed and comm carrier set connectors Connect comm control head to CWG Audio panel switches - as desired Stow CWG adapter		
	c. Partial PGA Configuration (TBD)		
	d. EVA Configuration (TBD)		

STA/T STEP	PROCEDURE	PANEL	REMARKS
	4.7.4.7 Waste Management Procedures		
	WARNING		
	If germicide pouch is accidently ruptured, proceed as follows:		
ALL	• Germicide on CM surface or hardware; wipe up with tissue.		
	• Germicide on crewman's skin; blot with tissue and flush with water.		
	• Germicide in crewman's eyes; irrigate with water from water gun or soaked tissue.		
	• Germicide ingested; take magnesium compound and/or high protein food - do not induce vomiting.		
	a. Urine Dump (TBD)		
	b. Defecation/Vacuum Cleaner Operation and Debris Disposal		
	Connect unit to the waste management dump line quick disconnect		Either fecal canister or vacuum cleaner. Verify urine receptacle not connected to waste management dump line quick disconnect or low vacuum will result.
	WASTE MGMT OVBD DRAIN vlv - DUMP	251	
	Insert inner bag into unit		
	Insert germicide pouch (protective cover removed) into fecal/emesis (F/E) inner bag		Germicide pouch inserted prior to performing task for defecation function only.
	Perform task		Either defecation or vacuuming.

STA/T STEP	PROCEDURE	PANEL	REMARKS
ALL	WASTE MGMT OVBD DRAIN vlv - OFF	251	Upon completing defecation or vacuuming function only.
	Seal inner bag		Debris bags are in short supply. When vacuuming, replace bag when vacuum cleaner suction is reduced.
	Rupture germicide pouch Place inner bag into outer F/E bag and seal outer bag Knead contents Only subsequent to initial odor detection will waste stowage compartment be vented prior to each waste deposit WASTE STOWAGE VENT vlv - VENT for 30 sec, then CLOSED	252	Fecal contents only required to be kneaded.
	Stow outer F/E bag		Fecal matter stowed in waste stowage compartment.
	c. Emesis Obtain fecal/emesis (F/E) bag Perform task Insert germicide pouch (protective cover removed) into inner F/E bag Seal inner F/E bag Rupture germicide pouch Insert inner F/E bag into outer F/E bag and seal Only subsequent to initial odor detection will waste stowage compartment be vented prior to each waste deposit WASTE STOWAGE VENT vlv - VENT for 30 sec, then CLOSED Stow outer F/E bag		

STA/T STEP	PROCEDURE	PANEL	REMARKS
	4.7.4.8 CM Repressurization		
	a. Normal Mode (time approx 30 min)		
CDR	CAB PRESS RELF (2) - NORMAL (safety latch on)	325	
LMP	O2 PRESS IND sw - SURGE TANK	2	
CDR	O2 PLSS vlv - FILL	326	
	REPRESS O2 VLV - OPEN	601	Guarded.
LMP	CRYO TK 1 O2 PRESS ind - 150 psia min	2	Minimum surge tank pressure.
CDR	O2 PLSS vlv - OFF	326	
LMP	CAB PRESS ind - 3.0 psia (in 1 minute)	2	
CDR	REPRESS O2 VLV - CLOSE	601	Guarded. Close about 2 minutes after cabin pressure reaches 3.0 psia.
CMP	CAB REPRESS vlv - OPEN (CW)	351	Maintain 150 psia minimum in surge tank.
LMP	CAB PRESS ind - 4.8-5.2 psia	2	
	CAB FAN (both) - on (up)		
	O2 PRESS IND sw - TANK 1		
CMP	CAB REPRESS vlv - close (CCW)	351	
	b. Alternate Mode (time approx 52 min)		
CDR	O2 PLSS vlv - OFF	326	To conserve emergency O2 supply.
	CAB PRESS RELF (2) - NORMAL (safety latch off)	325	
CMP	EMER CAB PRESS vlv - BOTH	351	
	CAB REPRESS vlv - OPEN (CW)		
LMP	O2 PRESS IND sw - SURGE TANK	2	
	CRYO TK O2 PRESS 1 ind - 150 psia min		Minimum surge tank pressure.

STA/T	STEP	PROCEDURE	PANEL	REMARKS
CMP		EMER CAB PRESS vlv - OFF	351	
		CAB REPRESS vlv - adjust to 150 psia min		
LMP		CAB PRESS ind - 4.8-5.2 psia	2	
		CAB FAN (both) - on (up)		
		02 PRESS IND sw - TANK 1		
CMP		CAB REPRESS vlv - close (CCW)	351	
	c.	Lone Crewman Mode (TBD)		
	4.7.4.9	Pressure Suit Circuit and PGA Check at 5.0 psia		
	a.	Gross Suit Circuit Verification		This procedure may be used in lieu of b, PGA Check Only, to ascertain complete suit loop integrity.
CDR		DIRECT 02 vlv - close (CW)	7	
CMP		SUIT PRESS ind - 4.8-5.2 psia	2	
		02 FLOW ind - 0.2-0.4 lb/hr		
CDR		SUIT TEST vlv - PRESS	380	All crewmen exercise PGA joints during pressurization period. DIRECT 02 valve may be slightly opened to reduce suit loop pressurization time, but must be fully closed (CW) at 4.0 psig suit pressure.
CMP		02 FLOW ind - 1.0 lb/hr (pegged)	2	
		02 FLOW HI lt - on		After 16-second delay.
ALL		MASTER ALARM pb/lt (3) - on, push	1,3,122	
CMP		SUIT PRESS ind - 8.9-9.5 psia	2	In approximately 75 seconds.
ALL		PGA press ind (3) - 4.1-4.5 psig	PGA	

NORMAL/BACKUP

STA/T STEP	PROCEDURE	PANEL	REMARKS
	WARNING Sudden depressurization can result from aneroid chamber relief valve leakage when demand regulator is in OFF position, causing crew discomfort or possible injury.		
CDR	O2 DEMAND REG vlv - OFF	380	
CMP	O2 FLOW ind - 0.2 lb/hr (pegged)	2	
	O2 FLOW HI lt - out		
ALL	PGA press ind (3) - <0.5 psi/min pressure decay	PGA	Crewmen to remain inactive while monitoring pressure decay to preclude indicator fluctuation. Do not schedule monitoring during accumulator stroking or 30 seconds thereafter.
CDR	O2 DEMAND REG vlv - BOTH	380	Momentary O2 flow increase until SUIT TEST valve in DEPRESS position.
	SUIT TEST vlv - DEPRESS		
CMP	O2 FLOW ind - 0.2-0.4 lb/hr	2	
	SUIT PRESS ind - slightly >CAB PRESS ind		In approximately 75 seconds.
CDR	SUIT TEST vlv - OFF	380	
	b. PGA Check Only		This procedure performed only if individual or collective PGA verification required.
	DIRECT O2 vlv - close (CW)	7	
LMP	SUIT PRESS ind - 4.8-5.2 psia	2	
	O2 FLOW ind - 0.2-0.4 lb/hr		

STA/T STEP	PROCEDURE	PANEL	REMARKS
CDR	SUIT TEST vlv - PRESS	380	All crewmen exercise PGA joints during pressurization period. DIRECT O2 valve may be slightly opened to reduce suit loop pressurization time, but must be fully closed (CW) at 4.0 psig suit pressure.
LMP	O2 FLOW ind - 1.0 lb/hr (pegged)	2	
	O2 FLOW HI lt - on		
ALL	MASTER ALARM pb/lt (3) - on, push	1,3,122	
LMP	SUIT PRESS ind - 8.9-9.5 psia	2	After approximately 75 seconds.
ALL	PGA press ind (3) - 4.1-4.5 psig	PGA	
	WARNING		
	Suit flow valve(s) may remain in OFF position for no longer than one minute or asphyxiation may result.		
	CAUTION		
	If all suit flow valves are closed simultaneously the suit compressors must be shut off to prevent compressor damage due to deadheading of the suit loop.		
	Suit flow vlv (suited crewmen) - OFF	300,301,302	
	Disconnect O2 exhaust umbilical from PGA (suited crewmen)		
	PGA press ind (suited crewmen) - <0.5 psi/min pressure decay	PGA	Crewmen to remain inactive while monitoring pressure decay to preclude indicator fluctuation.
	Reconnect O2 exhaust umbilical to PGA (suited crewmen)		

STA/T STEP	PROCEDURE	PANEL	REMARKS
ALL	Suit flow vlv (suited crewmen) - SUIT FULL FLOW	300,301,302	
CDR	SUIT TEST vlv - DEPRESS	380	
LMP	O2 FLOW HI lt - out	2	
	O2 FLOW ind - 0.2-0.4 lb/hr		
	SUIT PRESS ind - slightly <CAB PRESS ind		In approximately 75 seconds.
CDR	SUIT TEST vlv - OFF	380	
	c. Lone Crewman Operation (TBD)		
	4.7.4.10 Hygrometer Operation		Allow hygrometer system to come to thermal equilibrium in cabin prior to use (about 10 minutes).
ALL	DEW/OFF/AMB - OFF	HYGRO	DEW/OFF/AMB switch to OFF before power cable connected to 28 vdc outlet.
	UTIL PWR - OFF	100	
	Connect to 28 vdc utility outlet		
	UTIL PWR - on (up)		
	DEW/OFF/AMB - AMB	HYGRO	
	Extend sensor in sample area, record reading		Sensor held by connector to prevent obstructing opening in housing, giving erroneous indication. Gently wave sensor through air sample until reading stabilizes, then record reading.
	DEW/OFF/AMB - DEW		
	Extend sensor in sample area, record reading		
	Convert readings to relative humidity and record		Using ambient and dew point readings, consult conversion chart to obtain relative humidity percentage.
	If surface temperature required:		
	DEW/OFF/AMB - AMB		
	Press sensor unit against surface (approx 1 min)		Hold sensor button against surface until meter reading stabilizes (approximately one minute).
	DEW/OFF/AMB - OFF		
	UTIL PWR - OFF	100	
	Disconnect and stow hygrometer		

STA/T	STEP	PROCEDURE	PANEL	REMARKS
	4.7.4.11	CM 02 Supply Refill		
		a. Three Crewmen Operation		
LMP		02 PRESS IND sw - SURGE TANK	2	
		CRYO TK 1 02 PRESS ind - ≥400 psia		
CMP		CAB REPRESS vlv - close (CCW)	351	
CDR		REPRESS 02 VLV - CLOSE	601	Guarded.
		02 PLSS vlv - FILL	326	
LMP		CRYO TK 1 02 PRESS ind - 865-935 psia	2	Monitor pressure to assure no decrease below 150 psia.
		02 PRESS IND sw - TANK 1		Upon completing refill operation.
CDR		02 PLSS vlv - OFF	326	
		b. Lone Crewmen Operation (TBD)		
	4.7.4.12	CM Pressure Dump		
		a. CAB PRESS RELF Valve - Three Crewmen		
LMP		CAB FAN (both) - OFF	2	
CDR		02 PLSS vlv - OFF	326	
		DIRECT 02 vlv - close (CW)	7	
		CAB PRESS RELF (RH) - DUMP (safety latch off)	325	Valve in DUMP position long enough for cabin pressure to decrease to approximately 3.25 psia.
LMP		CAB PRESS ind - 3.0-3.25 psia	2	
CDR		CAB PRESS RELF (RH) - BOOST ENTRY	325	
LMP		02 FLOW ind - >0.2 lb/hr	2	Verifies cabin pressure regulator lockout.
		SUIT PRESS ind - 3.5-4.0 psia		Verifies suit demand pressure regulator aneroid function.
CDR		CAB PRESS RELF (RH) - DUMP	325	
LMP		CAB PRESS ind - 0.0 psia (within 6 min)	2	Cabin at 0.01 psia within 4.5 minutes.

STA/T STEP	PROCEDURE	PANEL	REMARKS
CDR	CAB PRESS RELF (2) - NORMAL (safety latch on)	325	
	b. CAB PRESS RELF Valve - Lone Crewmen (TBD)		
	c. Unified Hatch PRESS EQUAL VLV - Three Crewmen (TBD)		
	d. Unified Hatch PRESS EQUAL VLV - Lone Crewman (TBD)		
	4.7.4.13 Suit Circuit Purge of H2		
	DIRECT O2 vlv - OPEN (CCW) for 1 min	7	Suit circuit pressure relief valve dumps hydrogen into cabin.
	O2 FLOW ind - increases	2	
	O2 FLOW HI lt - on		
	MASTER ALARM pb/lt (3) - on, push	1,3,122	
	DIRECT O2 vlv - close (CW)	7	
	O2 FLOW HI lt - off	2	
	O2 FLOW ind - decreases		
	4.7.4.14 Cabin Cold-Soak Operation		Secondary glycol loop placed in evaporative cooling mode, and routed only to suit circuit heat exchanger.
	a. Activate Cold Soak		
CMP	Open coolant control attenuation panel		Covers panel 382.
	WARNING SUIT FLOW RELF valve must remain OFF throughout mission or swelling of CO2 odor absorber filters may result.		

STA/T STEP	PROCEDURE	PANEL	REMARKS
CMP	SUIT HT EXCH SEC GLY vlv - FLOW	382	
	EVAP H20 CONT SEC vlv - AUTO		
	Close coolant control attenuation panel		
	GLY TO RAD SEC vlv - BYPASS	377	
LMP	CAB TEMP - MAN	2	
CMP	PRIM CAB TEMP vlv - C (CW)	303	Max cold position.
	SEC CAB TEMP vlv - OFF (CCW)		Bypasses cabin heat exchanger.
LMP	SUIT CKT HEAT EXCH - BYPASS	2	
	ECS IND sel - SEC		
	SEC COOL LOOP PUMP - AC 1		
	GLY DISCH SEC PRESS ind - 39-51 psig		After initiating cold-soak operation, periodic ECS monitoring check should include readings from the following secondary loop indicators: GLY EVAP SEC OUT TEMP, GLY EVAP SEC STM PRESS, GLY DISCH SEC PRESS, and ACCUM SEC QTY.
	ACCUM SEC QTY ind - 30-70%		
	SEC COOL LOOP EVAP - EVAP		
	GLY EVAP SEC OUT TEMP ind - 40-50.5°F		
	GLY EVAP SEC STM PRESS ind - 0.1-0.15 psia		
	ECS IND sel - PRIM		
	ECS RAD PRIM OUT TEMP ind - >-20°F		
	If <-20°F		Cold soak operation stopped until ECS RAD PRIM OUT TEMP >0°F.
	SEC COOL LOOP EVAP - RESET for 45 sec min, then off (center)		
	SEC COOL LOOP PUMP - off (center)		
	SUIT CKT HT EXCH - ON		
	b. Deactivate Cold Soak		
CMP	SEC CAB TEMP vlv - COOL MAX (CW)	303	
LMP	CAB TEMP - AUTO	2	
	SUIT CKT HEAT EXCH - ON		

STA/T STEP	PROCEDURE	PANEL	REMARKS
LMP	SEC COOL LOOP EVAP - RESET for 45 sec min, then off (center)	2	RESET closes steam pressure control valve. Steam pressure valve requires 36 seconds from full open to full close.
	SEC COOL LOOP PUMP - off (center)		
CMP	GLY TO RAD SEC vlv - NORMAL	377	
	Open coolant control attenuation panel		
	WARNING		
	SUIT FLOW RELF valve must remain OFF throughout mission or swelling of CO2 odor absorber filters may result.		
	EVAP H20 CONT SEC vlv - OFF	382	
	Close coolant control attenuation panel		
4.7.4.15	CM/LM Pressure Equalization (TBD)		
4.7.4.16	Tunnel Pressure Integrity Check (TBD)		

STA/T STEP	PROCEDURE	PANEL	REMARKS
	4.7.5 CAUTION AND WARNING SYSTEM		
	System management procedures for the C&WS consist of the following:		
	a. A procedure is provided for an operational test of the detection unit, system status lights, and the MASTER ALARM tone and lights. The test may be conducted at any time during the mission at the discretion of the crew.		
	b. An adjustment may be made at each orbital sunset to facilitate dark adaptation during the period of orbital darkness.		
	c. Acknowledgement of system status light illumination and resetting of the master alarm circuit is required. The procedures apply during prelaunch or any flight phase of the mission.		
	d. A procedure is provided for inhibiting the MASTER ALARM tone in each headset, at the discretion of the crew.		
	4.7.5.1 C&WS Operational Check		
CMP	C/W LAMP TEST - 1	2	Position 1 is momentary. A lamp test of MASTER ALARM light on MDC-122 accomplished when G&N condition lights on that panel tested. Master alarm tone not activated by this test.
CDR	MASTER ALARM pb/lt - on	1	
CMP	LH C/W lt (16) - on	2	
	C/W LAMP TEST - 2		Position 2 is momentary.
CDR	MASTER ALARM pb/lt - off	1	
CMP	LH C/W lt (16) - off	2	
LMP	MASTER ALARM pb/lt - on	3	

STA/T STEP	PROCEDURE	PANEL	REMARKS
CMP	RH C/W lt (23) - on	2	
	C/W LAMP TEST - off (center)		
LMP	MASTER ALARM pb/lt - off	3	
CMP	RH C/W lt (23) - off	2	
	C/W CSM - CM		Master alarm tone activated by this test.
	CM RCS lt (both) - on		Systems 1 and 2 status lights.
ALL	MASTER ALARM pb/lt and tone (3) - on	1,3,122	MASTER ALARM light on MDC-1 will not come on if C/W NORM switch in BOOST position.
	MASTER ALARM pb/lt - push		
	MASTER ALARM pb/lt and tone (3) - off		
CMP	C/W CSM - CSM	2	
	CM RCS lt (both) - off		
	4.7.5.2 Dark Adaptation Adjustment		
	C/W NORM - ACK (at sunset)		
	C/W NORM - NORM (at sunrise)		
	4.7.5.3 Acknowledge/Reset Master Alarm Indication		
	a. Normal mode		
ALL	MASTER ALARM pb/lt and tone (3) - on	1,3,122	
	MASTER ALARM pb/lt (3) - push		All MASTER ALARM lights have reset capability. Pushing any light will reset alarm circuit unless C/W NORM switch in BOOST position. In this case, there is no reset capability with MASTER ALARM light on MDC-1.
	MASTER ALARM pb/lt and tone (3) - off		
CMP	Applicable C/W lt - remains on	2	C/W light remains on until malfunction corrected.

STA/T STEP	PROCEDURE	PANEL	REMARKS
	b. Acknowledge mode (C/W NORM in ACK)		
ALL	MASTER ALARM pb/lt and tone (3) - on	1,3,122	
CDR,LMP	MASTER ALARM pb/lt (2) - push and hold	1,3	MASTER ALARM light on LEB-122 does not have acknowledge capability.
ALL	MASTER ALARM pb/lt and tone (3) - off	1,3,122	
CMP	Applicable C/W light - on, for malfunction indication	2	
CDR,LMP	MASTER ALARM pb/lt (2) - rel	1,3	
CMP	Applicable C/W light - off	2	Light may be recalled by again holding MASTER ALARM light on MDC-1 or MDC-3.
	4.7.5.4 Master Alarm Tone Headset Control		
	a. Inhibit tone		
ALL	PWR - AUDIO	9,10,6	Inhibit function may be selected individually or in any combination.
	b. Permit tone		
	PWR - AUDIO/TONE		

STA/T STEP	PROCEDURE	PANEL	REMARKS

4.7.6 TELECOMMUNICATIONS

The T/C system will be in operation throughout the entire mission. The information and procedures included here consist of normal and backup procedures that will be utilized during the earth orbital phase to accomplish mission requirements and satisfy test objectives. Some of these procedures will only be required during tests or contingencies.

Most orbital paths will involve passage over several MSFN ground stations within acceptable slant ranges for S band voice and data communications. Equipment necessary for voice communications, PCM, and TLM transmission will be activated and operating at all times. The UDL will also remain activated and capable of receiving up data when required.

Action required of the crew for voice communications and transmission of real-time PCM TLM will be to ensure optimum radiation and reception of RF signals, either by maintaining S/C attitude such that the selected omni-antenna is directed toward the MSFN station or by changing antennas with the S band antenna switches (2) on MDC-3. Also, the audio control panels (MDC-6, -9, and -10) must be set up in accordance with the requirements of the individual crewman for control of voice transmission and reception.

The reception of up data for updating the CTE and receiving real time commands (RTCs) will require no action on the part of the crew since the UDL will normally remain activated and will utilize the same omni-antenna as that used for S band voice and data operations. For updating the Apollo guidance computer, however, the up telemetry switches (panels 2 and 122) must be set to the ACCEPT position.

The following procedures are presented with the assumption that the appropriate electrical buses are powered and that the proper circuit breakers are closed.

STA/T	STEP	PROCEDURE	PANEL	REMARKS
	4.7.6.1	Basic Switch Configuration		
LMP	1	Apply A-C Power TELCOM GRP 1 - AC1 TELCOM GRP 2 - AC2	4	
ALL	2	Audio Panel (3) MODE (3) - INTERCOM/PTT S BD (3) - T/R SUIT PWR (3) - on (up) AUDIO CONT (3) - NORM PWR (3) - AUDIO/TONE VHF AM (3) - T/R INTERCOM (3) - T/R PAD COMM (3) - OFF	9,10,6	Each crewman's individual audio panel must be activated to enable him to receive or transmit voice signals. T/R position enables voice transmission and reception over selected audio channel. RCV position permits reception only.
LMP	3	S Band Normal S BD NORM XPNDR - PRIM S BD NORM PWR AMPL PRIM - PRIM S BD NORM PWR AMPL HI - HIGH S BD NORM MODE VOICE - VOICE S BD NORM MODE PCM - PCM S BD NORM MODE RNG - RANGING	3	Whenever S BD NORM XPNDR sw positioned from PRIM to SEC or from SEC to PRIM, hesitate momentarily in OFF position to allow relay activation to follow switch action.
	4	S Band Aux S BD AUX TAPE - OFF S BD AUX TV - OFF		

STA/T	STEP	PROCEDURE	PANEL	REMARKS
	5	Up TLM		
LMP		UP TLM DATA - DATA	3	
		UP TLM CMD - NORM		
		PWR AMPL tb - gray		Gray display indicates power applied to S Band power amplifier.
		TAPE MOTION tb - gray		Gray display indicates tape in motion.
	6	S Band Antenna		
		S BD ANT OMNI A - A		
		S BD ANT OMNI - OMNI		
	7	VHF AM		
		VHF AM A - SIMPLEX		
		VHF AM B - off (center)		
		VHF AM RCV ONLY - off (center)		
	8	VHF BCN - OFF		
	9	Tape recorder		
		TAPE RCDR PCM/ANLG - PCM/ANLG		
		TAPE RCDR FWD - FWD		
		TAPE RCDR RCD - RECORD		
	10	Power		
		SCE PWR - NORM		
		PMP PWR - NORM		
	11	TLM Inputs		
		PCM BIT RATE - LOW		Do not change PCM BIT RATE switch while tape recorder operating.
	12	VHF ANT - SM LEFT		
CMP	13	RNDZ XPNDR - OFF	100	

STA/T STEP	PROCEDURE	PANEL	REMARKS
	4.7.6.2 High Gain Antenna Operation		
CMP	HI GAIN ANT TRACK - MAN	2	
	HI GAIN ANT SERVO ELEC - PRIM		
	HI GAIN ANT BEAM - WIDE		
	HI GAIN ANT PWR - POWER		SCAN LIMIT light will come on momentarily and MASTER ALARM lights will come on.
	HI GAIN ANT PITCH & YAW POS (2) set in required antenna angles		
LMP	S BD ANT OMNI - HIGH GAIN	3	
CMP	HI GAIN ANT S BD ANT ind - >1/2 scale	2	
	HI GAIN ANT TRACK - AUTO		With TRACK switch in REACQ, antenna will reposition to position control settings upon loss of signal.
	HI GAIN ANT S BD ANT ind - >1/2 scale		
	4.7.6.3 S-Band Xponder Modes		
	Voice, RT-HBR Data, Ranging		
LMP	Select BASIC except PCM BIT RATE - HIGH	3	
	Voice, RT-LBR Data, Ranging Select BASIC		
	Voice, RT-HBR Data Select BASIC except S BD NORM MODE RNG - OFF PCM BIT RATE - HIGH		
	Voice, RT-LBR Data Select BASIC except S BD NORM MODE RNG - OFF		

STA/T STEP	PROCEDURE	PANEL	REMARKS
	Voice and Ranging		
LMP	Select BASIC except		
	S BD NORM MODE PCM - OFF	3	
	Voice		
	Select BASIC except		
	S BD NORM MODE PCM - OFF		
	S BD NORM MODE RNG - OFF		
	Voice and LBR PCM with Apollo/Recovery		
	Instrumented Aircraft (A/RIA)		
	Select BASIC except		
	S BD NORM MODE RNG - OFF		
4.7.6.4	FM Xmtr Modes		
	Dump PCM/Analog		
	Select BASIC except		
	TAPE RCDR FWD - REWIND		
	S BD AUX TAPE - TAPE		
	TAPE RCDR RCD - PLAY		
	TAPE RCDR FWD - FWD (after rewind complete)		
	TAPE MOTION tb - gray		Gray display indicates tape in motion.
	Rewind and return to BASIC		
	Dump LM PCM		
	Select BASIC except		
	TAPE RCDR FWD - REWIND		
	S BD AUX TAPE - TAPE		
	TAPE RCDR PCM/ANLG - LM PCM		
	TAPE RCDR RCD - PLAY		

STA/T STEP	PROCEDURE	PANEL	REMARKS
LMP	TAPE RCDR FWD - FWD (after rewind complete)	3	
	TAPE MOTION tb - gray		Gray display indicates tape in motion.
	Rewind and return to BASIC		
TV			
	WARNING		
	Insure that S BD AUX TV switch is OFF prior to connecting or disconnecting the TV camera.		
	Select BASIC except		
	S BD AUX TV - TV		
	Television camera - on	CAMR	
	Television camera ALC - as required		
4.7.6.5	VHF/AM Modes		BASIC switch configuration provides CSM-MSFN voice, CSM-LM voice, and CM-recovery voice.
	Simplex A		
	Select BASIC		
	Duplex A		PLSS operation.
	Select BASIC except		
	VHF AM A - DUPLEX	3	
	Simplex B		Backup CM-recovery voice.
	Select BASIC except		
	VHF AM B - SIMPLEX		
	VHF AM A - off (center)		

STA/T STEP	PROCEDURE	PANEL	REMARKS
	Duplex B		Backup PLSS operation.
LMP	Select BASIC except VHF AM B - DUPLEX VHF AM A - off (center)	3	
	RCV ONLY A Select BASIC except VHF AM RCV ONLY - A VHF AM A - off (center)		Provides capability to monitor recovery VHF voice transmissions.
	4.7.6.6 <u>DSE Record Modes</u>		Under nominal conditions MSFN will control tape recorder operation.
	Record HBR CM Data, CM/IC, LM/IC, LM/PCM Select BASIC except PCM BIT RATE - HIGH VHF AM RCV ONLY - B DATA		In order to dump LM PCM at high speed when recorded with HBR CM PCM, two dumps are required.
	Record LBR CM Data, CM/IC, LM/PCM, EVA/LM/IC Select BASIC except VHF AM RCV ONLY - B DATA		
	Record HBR CM Data, EVA/LM/IC, CM/IC Select BASIC except VHF AM A or B - DUPLEX PCM BIT RATE - HIGH		
	Record LBR CM Data, EVA/LM/IC, CM/IC Select BASIC except VHF AM A or B - DUPLEX		

STA/T	STEP	PROCEDURE	PANEL	REMARKS
	4.7.6.7	Conference Mode		
		Conference (Voice Relay) with Duplex A		Configures T/C to provide relay of voice and data between MSFN and LM or EVA via CSM.
		Select BASIC except		
CMP		MODE - VOX	10	Provides full conference between CSM/LM/EVA/MSFN while relaying EVA data to MSFN.
LMP		S BD NORM MODE VOICE - RELAY	3	
		VHF AM A - DUPLEX		
		VHF AM RCV ONLY - A		
		Conference (Voice Relay) With Duplex B		Same as previous mode except no EVA data relay.
		Select BASIC except		
CMP		MODE - VOX	10	
LMP		S BD NORM MODE VOICE - RELAY	3	
		VHF AM B - DUPLEX		
	4.7.6.8	Rendezvous Transponder Activation and Self Test		
CMP		RNDZ XPNDR - HEATER for 24 min., then to PWR	100	One minute warmup required if self-test only to be performed.
		SYS TEST (LH) - XPNDR	101	
		SYS TEST (RH) - A (XMTR power, self test)		
		SYS TEST ind - 2.5-5 vdc		
		SYS TEST (RH) - B (RCVR AGC, self test)		
		SYS TEST ind - 0-4.5 vdc		
		SYS TEST (RH) - C (Frequency lockup, self test)		
		SYS TEST ind - 4.5 vdc		
		SYS TEST (RH) - D (RCVR AGC)		The SYS TEST selectors (2) must remain in XPNDR and D while operating rendezvous transponder otherwise transponder will be in self-test mode.

STA/T STEP	PROCEDURE	PANEL	REMARKS
	4.7.6.9 Backup Modes		
	Up Voice Backup		Requires coordination with MSFN. Updata signal (noise) will be present in headsets until MSFN reconfigures for this mode.
LMP	Select BASIC except UP TLM DATA - UP VOICE BU	3	
	Down Voice Backup Select BASIC except S BD NORM MODE PCM - OFF S BD AUX TAPE - DN VOICE BU S BD NORM MODE RNG - OFF		
	Down Voice and LBR RT Data Backup Select BASIC except S BD AUX TAPE - DN VOICE BU S BD NORM MODE RNG - OFF		
	Key Select BASIC except S BD NORM MODE PCM - KEY S BD NORM MODE RNG - OFF		
	Down Data Backup Select BASIC except PMP PWR - AUX		
	4.7.6.10 Pad Communications		
ALL	Select BASIC except TAPE RCDR FWD - off (center) Prior to launch PAD COMM (3) - T/R (or RCV) PAD COMM VOL tw (3) - as req Launch -10:00 PAD COMM (3) - OFF	9,10,6	PAD COMM switch can be used after launch for intercom backup with PAD COMM VOL tw - decr.

STA/T STEP	PROCEDURE	PANEL	REMARKS
	4.7.7 MECHANICAL SYSTEMS		
	Operations for opening and closing the unified and combined hatches are presented in the following paragraphs, as well as the removal and installation of the docking probe and drogue. The procedures include performing the operations from the interior and exterior of the CM.		
	4.7.7.1 Opening Unified Hatch for EVT		
	a. Opening unified hatch from CM interior		
ALL	PGA's donned and checked, para 4.7.4.9		
	Procure tether and tool B and fasten to arm		Tool B stowed in location A1.
CMP	Dump CM pressure, para 4.7.4.12		
	WARNING Counterbalance piston chamber must be vented and counterbalance mechanism must be disengaged prior to opening the hatch in orbit.		
	CAUTION To prevent shearing lock pin, set lock pin rel knob to UNLOCK prior to operating actr handle.		
	Lock pin rel knob - UNLOCK		Pin can be sheared if left in LOCK position.
	Gear box sel - UNLATCH		
	Actr handle sel - U (unlatch)		
	Actr handle rel - push or squeeze		Push (button) or squeeze (bar) releases actuator handle for operation.
	Actr handle - operate (until hatch can be opened)		

STA/T STEP	PROCEDURE	PANEL	REMARKS
	b. Opening unified hatch from CM exterior		
ALL	PGA's donned and checked, para 4.7.4.9		
	Dump CM pressure para, 4.7.4.12		
	PRESS EQUAL VLV - insert tool B, depress and rotate (CW) to stop		Depressing pressure equalization valve with tool B will release inside actuating handle from stowed position, and rotating to stop will open valve.
	WARNING Counterbalance piston chamber must be vented and counterbalance mechanism must be disengaged prior to opening the hatch in orbit.		
	Hatch actuation socket - insert tool B		
	Rotate CW 14°		Releases lock pin.
	Rotate CCW (382°) until hatch can be opened		Releases hatch latches.
	4.7.7.2 Closing Unified Hatch for EVT		
	a. Closing unified hatch from CM interior		
CMP	Actr handle sel - N (neutral)		
	Gear box sel - N (neutral)		
	Open door rel handle - pull		D-ring.
	Verify latches are in open position		
	Close hatch		
	Open door rel handle - stow		
	Gear box sel - LATCH		
	Actr handle sel - L (latch)		

STA/T STEP	PROCEDURE	PANEL	REMARKS
	CAUTION To prevent shearing lock pin, set lock pin rel knob to UNLOCK prior to operating actr handle.		
CMP	Actr handle rel - push or squeeze		
	Actr handle - operate (while holding hatch closed) Verify hatch fully latched		
	Lock pin rel knob - LOCK (automatically)		Verified lock pin has automatically engaged.
	LOCK PIN ind - not extended		Indicated lock pin is engaged.
	xxxxxxxxxxxxxxxxxxxxxxxxxxxxxxxxxxxx If hatch was opened from CM exterior and lock pin rel knob does not lock, LOCK PIN reset - RESET (push) xxxxxxxxxxxxxxxxxxxxxxxxxxxxxxxxxxxx		
	Actr handle - stowed position		
	Repressurize CM, para 4.7.4.8		
	b. Closing unified hatch from CM exterior		
	Actr handle sel - N (neutral)		
	Gear box sel - N (neutral)		
	Open door rel handle - pull		D-ring.
LMP	Close hatch		
	Open door rel handle - stow		
	Hatch actuation socket - insert tool B		

STA/T STEP	PROCEDURE	PANEL	REMARKS
LMP	Rotate CW (382°) to stop then rotate CCW 14°		Engages hatch latches.
	Tool B - remove from socket		
CMP	LOCK PIN reset - RESET (push)		Engages lock pin.
	Lock pin rel knob - LOCK		
	LOCK PIN ind - not extended		
LMP	If press equal vlv is open		
	PRESS EQUAL VLV - insert tool B and rotate CCW to stop		Seals CM pressure equalization valve.
	Remove tool B		
	Repressurize CM, para 4.7.4.8		
	4.7.7.3 Unified Hatch Counterbalance Operation		
	a. Deactivate counterbalance mechanism		
CMP	Vent piston chamber		
	GN2 vlv handle - pull (inboard)		Squeeze handle to unlock.
	GN2 press ind - minimum		
	Disengage counterbalance		
	Tool B - insert into counterbalance locking pin		
	Rotate tool B (CCW) to stop (4-1/2 turns)		Disengages piston bellcrank from the hatch bellcrank. Tool F may also be used.
	b. Activate counterbalance mechanism		
	Engage counterbalance		
	Tool B - insert into counterbalance locking pin		
	Rotate tool B (CW) to stop (4-1/2 turns)		
	Pressurize piston chamber		
	GN2 vlv handle - push (outboard)		Squeeze handle to unlock.

STA/T STEP	PROCEDURE	PANEL	REMARKS
LMP	GN2 press ind - green		GN2 press ind will display charge bottle pressure when GN2 vlv handle in charge position (outboard). To provide maximum assist, GN2 vlv handle will be left in charge position through time counterbalance activated.
	xxxxxxxxxxxxxxxxxxxxxxxxxxxxxxxxxx x x If GN2 press ind - below green GN2 charge knob - CW x x xxxxxxxxxxxxxxxxxxxxxxxxxxxxxxxxxx		
	4.7.7.4 <u>Opening Combined Hatch</u>		
	a. Opening combined hatch from CM interior		
ALL	PGA's donned and checked, para 4.7.4.9		
LMP	Equalize CM/LM pressure, para 4.7.4.15		If required.
	Perform tunnel pressure integrity check, para 4.7.4.16		If required.
	Actr handle rel - PULL & ROTATE	tunl	To free actr handle for operation, release is rotated to stop.
	Actr handle - pull to stop		Actr handle should move approximately 80°.
	Actr handle sel - U (unlatch) (CCW 90°)		
	Actr handle - push to stop		Actr handle should move approximately 60° to release latches.
	Actr handle sel - STOW (CW 90°)		
	Actr handle - push to stowed position		Actr handle rel automatically locks handle in stowed position.

STA/T STEP	PROCEDURE	PANEL	REMARKS
LMP	Remove and stow combined hatch		Hatch should be stowed in LHEB.
	b. Opening combined hatch from CM exterior		
ALL	PGA's donned and checked, para 4.7.4.9		
CDR	PRESS EQUAL VLV - OPEN Tool B - insert, depress and rotate (CW)		
CMP	LM TUNL VENT vlv - LM/CM ΔP	12	
	LM/CM PRESS DIFF ind - _____ psid		Report indication to CDR.
CDR	Hatch actuation socket - insert tool B and rotate (CCW)	tunl	Disconnects gear box and releases hatch latches.
	Stow combined hatch in LHEB		
	Load all loose items to be abandoned from CM to LM when required		
	4.7.7.5 Closing Combined Hatch		
	Closing combined hatch from CM interior		Performed by LMP or CMP.
	Obtain combined hatch from stowage		Combined hatch stowed in LHEB.
	Position hatch against sealing surface		Align equivalent colored arrows.
	Actr handle rel - PULL & ROTATE	tunl	To free actr handle for operation, release rotated to stop.
	Actr handle - pull to stop		Actr handle should move approximately 80°.
	Actr handle sel - L (latch (CW 90°)		
	Actr handle - push to stop		Actr handle should move approximately 60° to engage latches.
	Actr handle sel - STOW (CCW 90°)		
	Actr handle - push to stowed position		Actr handle rel automatically locks handle in stowed position.

STA/T STEP	PROCEDURE	PANEL	REMARKS
CDR	PRESS EQUAL VLV - CLOSE (CW) Repressurize CM, para 4.7.4.8		
	4.7.7.6 Couch Positioning (TBD)		
	4.7.8 POWER DOWN CONFIGURATION (TBD)		

4.7.9 LIMITED USE CIRCUIT BREAKERS

The following list defines circuit breakers which will be open during major portions of flight time. Primary considerations are to maintain maximum crew safety, reduce consumable usage, and increase equipment reliability.

Circuit Breaker	Location	When Open	Remarks
PYRO A&B TIE TO BAT BUS A&B (2)	RHEB-250	Entire mission.	Closed only when required if pyro batteries indicate <35 vdc during EPS battery check.
BAT C TO BAT BUS A&B (2)	RHEB-250	Entire mission.	Closed only when required, to connect battery C to battery bus A or B.
ELS (2)	MDC-8	Postorbital insertion check.	Closed during deorbit and entry procedures. Open to isolate ELS until needed.
FLT/PL BAT BUS A&B and BAT C (3)	RHEB-275	Prelaunch	Closed prior to splashdown. Opened to isolate Bat Bus A&B and Bat C from the Flight and Post Landing Bus.
FC 1, 2, & 3 REACS (3)	RHEB-226	Prelaunch after FC startup.	Closed only when required to shut down FC. Opened to insure against inadvertent fuel cell shutdown.
RCS LOGIC (2)	MDC-8	Post S-IVB separation check.	Closed during prelaunch, launch, deorbit and entry procedures. Opened to insure against inadvertent CM/SM RCS transfer and/or CM RCS activation.

Circuit Breaker	Location	When Open	Remarks
FLOAT BAG (3)	MDC-8	Postorbital insertion check.	Closed after splashdown. Opened to insure against inadvertent activation of the float bag compressors.
PL VENT FLT/PL	MDC-8	Postorbital insertion check.	Closed after splashdown. Opened to insure against inadvertent activation of the postlanding vents.
SECS ARM (2)	MDC-8	Postseparation check.	Closed during prelaunch, launch, docking, deorbit and entry procedures. Opened to insure against inadvertent activation of SECS functions.
MN A&B BAT C (2)	RHEB-275	Prelaunch	Closed during deorbit and entry procedures, and as required for battery A or B backup. Opened to isolate battery C from the main buses.
MN REL PYRO (2)	RHEB-229	Prelaunch	Closed only after splashdown. Opened to prevent premature main parachute release.
FC RAD (3)	RHEB-226	Entire mission	Closed only when required to activate FC radiator bypass function.

STA/T STEP	PROCEDURE	PANEL	REMARKS

4.8 G&C REFERENCE DATA

This section provides data which generally apply to all G&C procedures in sections 4.4, 4.6, and 4.9 through 4.17. The data do not include procedures but contain information which may be referenced in various procedures, may constrain the application of procedures, or may be helpful in applying the procedures.

4.8.1 SCS RATE, DEADBAND AND JET SELECT LOGIC

When attitude control is mechanized for SCS modes, para 4.9.1, rate and deadband performance is established by the positioning of the ATT DEADBAND switch and the RATE switch. (See figure 4.8-1.)

Jet select logic is established on MDC-8 by the position of 16 AUTO RCS SELECT switches and by the engagement of 10 circuit breakers. Each switch is for a single engine. There are 4 switch groups titled A/C ROLL, B/D ROLL, PITCH and YAW with 4 switches each. The panel nomenclature for the AUTO RCS SELECT switches summarizes the jet characteristics for both SM and CM RCS jets. The nomenclature code is provided in figure 4.8-2.

For ullage, the switch setup is provided in figure 4.8-3. Ullage mechanization is shown with and without attitude control. Normally, the setup should include attitude control.

SM and CM RCS engine locations are depicted in figure 4.8-4.

In order to prevent inadvertent firings of the RCS engines when powering up the SCS, the BMAG's should be caged.

The pseudo rate function, which is controlled only by the LIMIT CYCLE switch, is used only during SCS attitude hold mode to conserve RCS propellants. The switch does not function when in computer (CMC) mode. Manual SCS maneuvers should not be performed with the LIMIT CYCLE switch on. Excessive RCS injector valve cycling and increased propellant consumption will result from the performance manual SCS maneuvers with the LIMIT CYCLE switch on.

Generalized Switch Nomenclature	Code	Description
(Letter, Number)	A,B,C or D	SM RCS Quad Designation A is -Z Quad B is +Y Quad C is +Z Quad D is -Y Quad
(Letter, Number)	1,2,3, or 4	Individual SM RCS Engine Designation 1 and 2 are roll engines 3 and 4 indicates quad A/C pitch engines or quad B/D yaw engines Odd nos. (1 and 3) indicate positive rotation Even nos. (2 and 4) indicate negative rotation
(+ or - sign, Letter)	±X, ±Y, ±Z	Translation Axis and Direction Designation
(Number,* Number*)	1 or 2	CM RCS System Designation 1 is primary system 2 is backup system
(Number,* Number*)	1,2,3,4,5 or 6	Individual CM RCS Engine Designation 1 and 2 are roll engines 3 and 4 are pitch engines 5 and 6 are yaw engines Odd nos. (1, 3 and 5) indicate positive rotation Even nos. (2, 4 and 6) indicate negative rotation

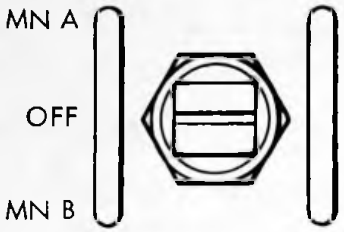

*No number means the engine is not applicable to the CM RCS system; applies only to A/C ROLL engines

SM-2A-1428A

Figure 4.8-2 SCS Jet Select Logic: MDC-8 Nomenclature

Control Parameter		SWITCH POSITIONS			
		RATE - LOW*		RATE - HIGH	
		ATT DBD:		ATT DBD:	
		MIN	MAX*	MIN	MAX
Attitude Deadband		±0.2°	±4.2°	±4.0°	±8.0°
Commanded Rates	Pitch & Yaw	±0.65°/sec		±7.0°/sec	
	Roll			±20.0°/sec	
Rate Deadband		±0.2°/sec		±2.0°/sec	

*Recommended position to minimize fuel consumption during attitude hold.

Figure 4.8-1. SCS Rate and Deadband Select Logic

Type of Ullage Desired		Required AUTO RCS SELECT Switch Positions (Engines Firing*)								RCS Engines* Providing Attitude Hold Capability	
		Pitch				Yaw					
		A3	C3	A4	C4	B3	D3	B4	D4	Pitch	Yaw
2 Jet-Quad A/C Pitch Engines C3 and A4	Without Attitude Control	OFF	MNA or MNB	MNA or MNB	OFF	MNA or MNB	OFF	OFF	MNA or MNB	None	B3 and D4
	With Attitude Control	MNA or MNB	MNA or MNB	MNA or MNB	MNA or MNB	MNA or MNB	OFF	OFF	MNA or MNB	A3 and C4	B3 and D4
2 Jet - Quad B/D Yaw Engines D3 and B4	Without Attitude Control	MNA or MNB	OFF	OFF	MNA or MNB	OFF	MNA or MNB	MNA or MNB	OFF	A3 and C4	None
	With Attitude Control	MNA or MNB	OFF	OFF	MNA or MNB	MNA or MNB	MNA or MNB	MNA or MNB	MNA or MNB	A3 and C4	B3 and D4
4 Jet - Quad ABCD Engines A4, B4, C3, D3	Without Attitude Control	OFF	MNA or MNB	MNA or MNB	OFF	OFF	MNA or MNB	MNA or MNB	OFF	None	None
	With Attitude Control	MNA or MNB	MNA or MNB	MNA or MNB	MNA or MNB	MNA or MNB	MNA or MNB	MNA or MNB	MNA or MNB	A3 and C4	B3 and D4

*See figure 4.8-4 for explanation of engine code.

Figure 4.8-3. SCS Ullage Setup

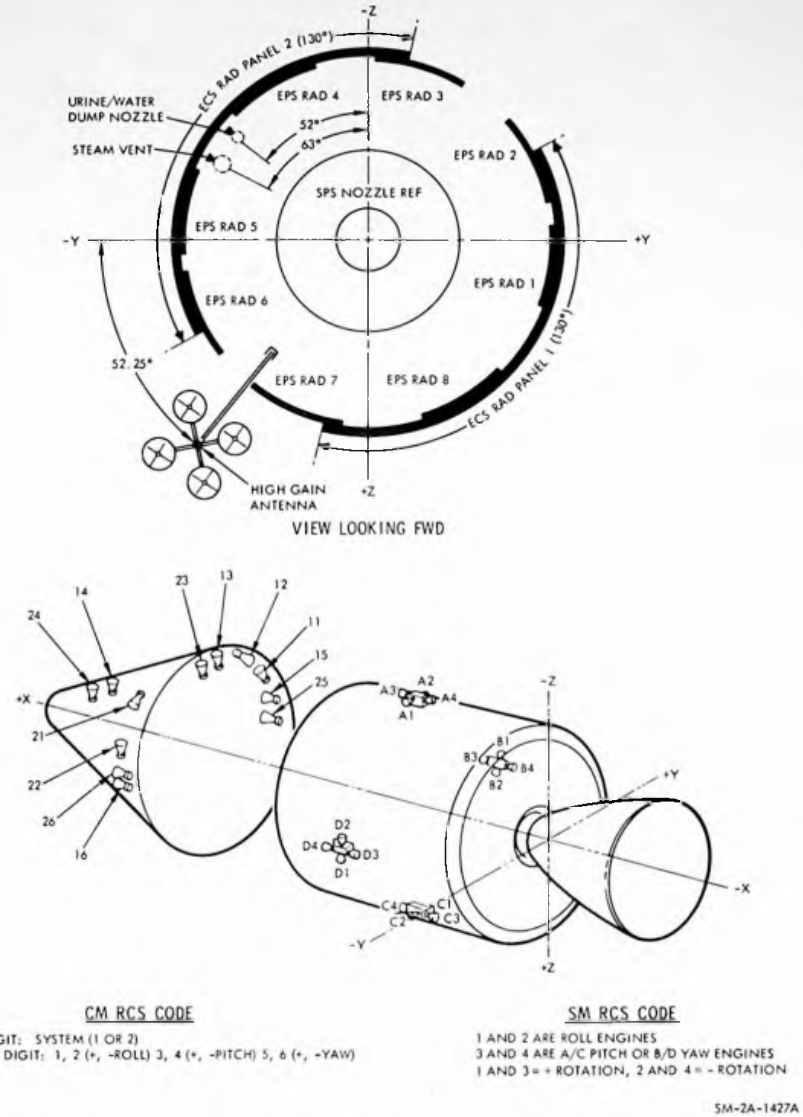

Figure 4.8-4. RCS Engines, Vent, and Radiator Location

STA/T STEP	PROCEDURE	PANEL	REMARKS

4.8.2 RCS ENGINES, VENT AND RADIATOR LOCATIONS

See figure 4.8-4.

4.8.3 SCS LOGIC BUS POWER DISTRIBUTION

Figures 4.8-5 and 4.8-6 describe power distribution to the SCS controls (pushbuttons, functions and switches). The SCS LOGIC POWER circuit breakers on panel 8 provide MNA and MNB power to the four SCS logic buses. The power source for each control is also shown.

4.8.3.1 SCS Logic Bus 2 and 3 Power Distribution

The power to SCS logic buses 2 and 3 is controlled by the LOGIC POWER 2/3 switch on panel 7. The switches powered by these two buses have no open circuit or power off position. Power is removed from these switches by placing the LOGIC POWER 2/3 switch to OFF. Some control loads can be removed from LOGIC BUS 2 or 3 by selecting switch positions not powered by logic bus 2 or 3.

4.8.3.2 SCS Logic Bus 1 and 4 Power Distribution

The power to SCS logic buses 1 and 4 is controlled only by the SCS LOGIC BUS circuit breakers on panel 8. The controls on these two buses have an open circuit or nonpower position for logic bus 1 or 4. Logic bus 1 or 4 loads can only be removed by selecting the open circuit or nonpower position of each control.

4.8.4 LIMITED USE CONTROLS

The G&C circuit breakers, required for G&C operation, are to be closed during the entire mission except in the event of malfunctions. (See figure 4.8-7.) If a malfunction occurs, some circuit breakers may be operated in order to isolate problem areas. Refer to malfunction procedures, section 5.2.

Figure 4.8-8 defines switches which will remain in the same position during the major portion of orbital flight time because of functional requirements. Other considerations are to maintain maximum crew safety, increase equipment reliability and minimize power consumption.

SCS CONTROLS		POWER SOURCE	
TITLE	POSITION(S)	SCS LOGIC BUS 2	SCS LOGIC BUS 3
*FDAI SCALE	5/5	X	
*FDAI SEL	2		X
	1		X
FDAI SOURCE	CMC	X	
	ATT SET		X
	GDC		X
*ATT SET	IMU	X	
SC CONT	CMC	X	
	SCS		X
*BMAG MODE ROLL	ATT 1/RATE 2	X	
	RATE 2	X	
*BMAG MODE (PITCH & YAW)	ATT 1/RATE 2		X
	RATE 2		X
*THC-CW	CW	X	
SCS TVC PITCH & YAW	AUTO		X
	RATE CMD		X
	ACCEL CMD		X
ΔV CG	LM/CSM		X
	CSM		X
*.05 G sw	OFF	X	
*TVC GMBL DR (2)	2		X
*Other position(s) are not powered by Logic bus 2 or 3.			

Figure 4.8-5. SCS Logic Bus 2 and 3 Power Distribution

SCS CONTROLS		POWER SOURCE		
TITLE	POSITION(S)	SCS LOGIC BUS 1	SCS LOGIC BUS 4	OPEN CIRCUIT (OFF POSITION)
CMC ATT	IMU	X	X	
	GDC			X
*FDAI SCALE	5/1			X
	50/15 - 50/10		X	
*FDAI SEL	1/2		X	
*ATT SET	GDC		X	
MAN ATT (3)	ACCEL CMD	X		
	RATE CMD			X
	MIN IMP	X		
LIM CYCLE	ON (UP)			X
	OFF	X		
ATT DBD	MAX			X
	MIN	X		
RATE	HIGH	X		
	LOW			X
*BMAG MODE (3)	RATE 1	X		
DIRECT ULL pb		X		
THRUST ON pb		X		
GDC ALIGN pb			X	
EMS ROLL	ON (UP)		X	
	OFF			X
*.05 G sw	ON (UP)		X	
*TVC GMBL DR (2)	1			X
	AUTO	X		

*Other position(s) are not powered by Logic bus 1 or 4.

Figure 4.8-6. SCS Logic Bus 1 and 4 Power Distribution

The G&C circuit breakers listed in this chart must be closed throughout the mission except when necessary to correct a malfunction.

- Panel 8
  - SCS
    - TV AC 1
    - AC (both)
    - ECA/TVC AC 2
    - DIRECT ULL (2)
    - CONTR/DIRECT (4)
    - CONTR/AUTO (2)
    - LOGIC BUS (4)
    - SYS (2)
    - A/C ROLL (2)
    - B/D ROLL (2)
    - PITCH (2)
    - YAW (2)
  - ORDEAL (2)
  - EMS (2)
  - RCS (10)
  - SPS (12)

- Panel 5
  - G/N
    - PWR (both)
    - IMU (2)
    - IMU HTR (2)
    - CMPTR (2)
    - OPT (2)

- Panel 229
  - EPS
    - GRP 1 (both)
    - GRP 2 (both)
    - GRP 3 (both)
    - GRP 4 (both)
    - GRP 5 (both)

Figure 4.8-7. Limited Use G&C Circuit Breakers

Switch	Location	Position Major Portion of Mission	When Required	Remarks
CMC ATT	MDC-1	IMU	Normally not touched	Selection of GDC position causes total attitude display to be lost on both balls.
IMU CAGE (guarded)	MDC-1	off (down)	To establish an inertial reference in event of CSS failure or IMU tumbling.	Cage mode zeros the IMU gimbals in a coarse alignment.
EMS ROLL	MDC-1	OFF	Prior to entry	Refer to Entry and Entry Preparation Procedures.
.05 G sw	MDC-1	OFF	At .05 G during entry preparation	
LV/SPS IND α	MDC-1	Pc	Following launch tower jettison	Left in Pc position after tower jettison.
LV/SPS IND SII/SIVB	MDC-1	GPI	After separation from SIVB	Placed in SII/SIVB position prior to liftoff.
LV GUID	MDC-2	IU	If manual inputs to the SIVB control system are required.	Nonfunctional after separation from SIVB.
UP TLM	LEB-122	ACCEPT	Not normally changed	Both UP TLM switches (MDC-2, LEB 122) must be in accept position for CMC to accept telem data. MDC-2 switch is normally used as control.

Figure 4.8-8. Limited Use Controls

STA/T STEP	PROCEDURE	PANEL	REMARKS

4.8.5 G&N OPERATIONS

4.8.5.1 CSS/ISS Interface

Normally the CMC must be ON before the IMU can be operated. The IMU may be powered up while the CMC is at STBY. In this condition, the IMU is caged (if powered up) and remains in a coarse align mode. Caging is accomplished internally and does not require any panel switching. However, if the CMC is at STBY, the IMU can be uncaged by momentarily placing the IMU CAGE switch to on (up).

4.8.5.2 DSKY Operations

DSKY operations (MDC-2 and LEB-140) require certain restrictions to operation, loading of data, and display of data which are necessary to proper operation. Some general restrictions are listed below. Detailed information relative to DSKY operations is contained in MIT Report E-2129, "Keyboard and Display Program and Operation."

1. For display verbs (01-07), monitor verbs (11-17), and for all load verbs (21-25), the number of components of the verb must not exceed the number of components of the noun being used. If an attempt is made to violate this restriction the OPR ERR indicator will illuminate when ENTR is pressed to execute the verb/noun action. (Noun 01 may be used with any verb regardless of number of components.)

2. No mixing of octal and decimal data will be allowed for loads having more than one component. If an attempt is made to violate this restriction, the OPR ERR indicator will illuminate when ENTR is pressed for the last entry.

3. Loading decimal data requires that each complete entry be made with a sign (+,-), followed by five digits. If the desired data load does not contain five significant digits, zeros (0) must be entered ahead of the most significant digit. (E.g., for a data load of +925, the entry will be made by pressing DSKY keys, +, 0, 0, 9, 2, 5, ENTR.) Octal data loads only require that the significant digits be pressed.

4. Machine addresses must be loaded in octal.

STA/T STEP	PROCEDURE	PANEL	REMARKS

5. If an attempt is made to load a data word which is too large in magnitude for the noun being used, the OPR ERR indicator will illuminate.

6. Verify all data loads before pressing ENTR key for the last register being loaded. (The CLR key has no effect after last ENTR is pressed.) If any of the data is incorrect, the register may be cleared by pressing the CLR key. Each successive pressing of the CLR key will clear the preceding register until the first register is cleared. (This backing up action will only operate on components called by the load verb used.)

7. All VERB/NOUN flashes require operator action and the program in progress is halted until appropriate action is taken.

4.8.5.3 Optics Mechanization

Operation of the SCT and SXT requires adherence to certain constraints which are described as follows:

1. To avoid sun interference, the sun position must be more than 10 degrees from the optics shaft-drive axis and more than 15 degrees from the landmark LOS for the SXT, and more than 55 degrees from the shaft-drive axis for the SCT. Within these limits it is possible to use the SXT even when the sun position is between the SLOS and LLOS. The constraints given, however, do not take into account light scattering which can occur from the actual spacecraft configuration (such as with LM in the docked position).

2. An adequate portion of the star field must be visible through the SCT in order that navigational stars can be recognized. The optics shaft-drive axis thus must be pointed at least 30 degrees above local sunlit earth horizon and at least 20 degrees above local dark earth horizon.

3. Maximum SXT LOS drive rates are 10 deg/sec for the trunnion and 19.5 deg/sec for the shaft, with a ± 20 percent tolerance. During landmark tracking from a 100-nautical mile earth orbit, in order to be able to maintain the optics LOS within the capability of the shaft-drive rate, the optics LOS to the landmark must be more than 8.5 degrees from the

STA/T STEP	PROCEDURE	PANEL	REMARKS
	optics shaft-drive axis ground track at the closest point of approach of the landmark to the shaft-drive-axis ground track. Within this constraint, landmarks on the spacecraft ground track can be used by simply rolling the SC so that the optic LOS is more than 8.5 degrees from the optics shaft-drive-axis LOS.		

STA/T STEP	PROCEDURE	PANEL	REMARKS
4.8.6	VERB LIST		
	Regular Verbs		
	01 Display oct compnt 1 (R1)		
	02 Display oct compnt 2 (R1)		
	03 Display oct compnt 3 (R1)		
	04 Display oct compnt 1, 2 (R1, R2)		
	05 Display oct compnt 1, 2, 3 (R1, R2, R3)		
	06 Display decimal (R1 or R1, R2 or R1, R2, R3)		
	07 Display DP decimal - test only (R1, R2)		
	11 Monitor oct compnt 1 (R1)		
	12 Monitor oct compnt 2 (R1)		
	13 Monitor oct compnt 3 (R1)		
	14 Monitor oct compnt 1, 2 (R1, R2)		
	15 Monitor oct compnt 1, 2, 3 (R1, R2, R3)		
	16 Monitor decimal (R1 or R1, R2 or R1, R2, R3)		
	17 Monitor DP decimal - test only (R1, R2)		Grd use.
	21 Load compnt 1 (R1)		
	22 Load compnt 2 (R2)		
	23 Load compnt 3 (R3)		
	24 Load compnt 1, 2 (R1, R2)		
	25 Load compnt 1, 2, 3 (R1, R2, R3)		
	27 Display fixed memory		Grd use.

STA/T STEP	PROCEDURE	PANEL	REMARKS
30	Request executive		Grd use.
31	Request waitlist		Grd use.
32	Recycle prog		
33	Proceed		
34	Terminate function		
35	Test lights		
36	Request fresh start		Blanks DSKY displays. May compromise stored state vector requiring a P27 update and IMU orientation determination.
37	Change prog (major mode)		
	Extended Verbs		
*40	Zero ICDU (used with N20)		Insures sync between ISS CDU ctrs and CDU ctrs in CMC. Terminates coarse align and enters fine align.
41	Coarse align CDU (used with N20 & N91)		N20 - Aligns IMU to gimbal angles specified by crew. To coarse align to 0, 0, 0 when GMBL LOCK and coarse align. N91 - To drive optics to shaft and trun angles specified by crew.
42	Pulse torque gyro		Fine align IMU.
43	Load FDAI att error needles		P00 only.
46	Activate DAP		
48	Load DAP data (R03)		Calls up routine 03.
49	Start crew defined maneuver - R62		P00 only.
50	Please perform		
51	Please mark		
52	Marked on offset landing site		
53	Please mark alternate LOS		

*Callable with another extended verb in use and does not lock out other extended verbs.

NORMAL/BACKUP

STA/T STEP	PROCEDURE	PANEL	REMARKS
54	Start rend backup sighting mark (R23)		
55	Increment CMC time (decimal)		
56	Terminate tracking (P20)		
57	Start rend sighting mark (R21)		
58	Reset stick flag		
59	Please mark (optics calibration)		
*60	Set att error reference to present att		
*61	Display DAP att error		Mode 1. FDAI error needles show difference between current and DAP commanded ICDU angles.
*62	Display total att error		Mode 2. Display difference between desired final ICDU's (N22) and present ICDU's (N20) resolved into CSM control axes.
*63	Display total astronaut att error		Mode 3. Display difference between astronaut total attitude (N17) and present ICDU's (N20) resolved into CSM control axes.
64	Start S-band antenna routine (R05)		
*65	Start optical verification of prelaunch alignment - P03		V65E calls for P03 (during P02 only).
*68	CSM stroke test on		
70	Update liftoff time - P27		V70 through V73 are allowed only during P00, P01, P02, or P03.
71	Univ update - BLOCK ADR - P27		
72	Univ update - SINGLE ADR - P27		
73	Update CMC time (octal) - P27		
74	Initialize erasable dump via downlink		
*75	Backup liftoff		
*76	Set preferred att flag		

*Callable with other extended verb in use and does not lock out other extended verbs.

STA/T STEP	PROCEDURE	PANEL	REMARKS
*77	Reset preferred att flag		
*78	Update prelaunch azimuth		
*79	Start lunar LMK selection (R35)		V79E calls R35.
*80	Enable LM state vector update		
*81	Enable CSM state vector update		
82	Start orbit param display (R30)		V82E calls R30.
83	Start rend param display #1 (R31)		V83E calls R31.
84	Start target delta V (R32)		V84E calls R32.
85	Start rend param display #2 (R34)		V85E calls R34.
*86	Reject rend backup sighting mark		
*87	Set VHF range flag		
*88	Reset VHF range flag		
89	Start rend final attitude routine (R63)		V89E calls R63 from P00 only.
*90	Request rend out of plane display (R63)		V90E calls R63.
91	Compute banksum		P00 only.
92	Start IMU performance test (P07)		P00 only (Grd test).
93	Enable W matrix initialization		
98	Enable translunar injection		
99	Enable engine ignition		

4.8.7 NOUN LIST

Normal Nouns

01	Specify address (fract)	.XXXXX
02	Specify address (whole)	XXXXX.
03	Specify address (degree)	XXX.XX
05	Angular error/diff	XX.XXX (deg.)
06	Option code ID	OCTAL
	Option code	

*Callable with other extended verb in use and does not lock out other extended verbs.

STA/T STEP	PROCEDURE		PANEL	REMARKS
08	Alarm data	ADRES	OCTAL	
		BBANK	OCTAL	
		ERCOUNT	OCTAL	
09	Alarm codes	FIRST	OCTAL	
		SECOND	OCTAL	
		LAST	OCTAL	
10	Channel to be specified		OCTAL	
14	Inbit message	BITS	OCTAL	
		CHANNEL	OCTAL	
		TIME	OCTAL CENTSECS	
15	Increment address		OCTAL	
16	Time of event			Used by extended verb only.
17	Astronaut total attitude	R	XXX.XX DEG	Used in Mode 3 needles (V63).
		P	XXX.XX DEG	
		Y	XXX.XX DEG	
18	Auto maneuver	R	XXX.XX DEG	Used with V50.
		P	XXX.XX DEG	
		Y	XXX.XX DEG	
19	Bypass att trim maneuver	R	XXX.XX DEG	Used with V50 only and retains N22 displays.
		P	XXX.XX DEG	
		Y	XXX.XX DEG	
20	ICDU angles	OG-Roll	XXX.XX DEG	
		IG-Pitch	XXX.XX DEG	
		MG-Yaw	XXX.XX DEG	
21	PIPAS	X	XXXXX. Pulses	
		Y	XXXXX. Pulses	
		Z	XXXXX. Pulses	
22	New ICDU angles	OG-Roll	XXX.XX DEG	
		IG-Pitch	XXX.XX DEG	
		MG-Yaw	XXX.XX DEG	
24	Delta time for CMC clock		00XXX. HRS	V25 N24 display initiated by V55E.
			000XX. MIN	
			0XX.XX SEC	
25	Checklist		XXXXX.	Used with V50.

G&C REFERENCE DATA

STA/T STEP	PROCEDURE	PANEL	REMARKS
26	Prio/delay, ADRES, BBCON	OCTAL (R1,R2,R3)	
27	Self-test on/off sw	XXXXX.	
29	X SM launch azimuth	XXX.XX DEG	
30	Target code (gyro compassing verif)	XXXXX. (R1,R2,R3)	
31	Time of landing site	00XXX. HRS 000XX. MIN 0XXXX. SEC	
32	T perigee	00XXX. HRS 000XX. MIN 0XX.XX SEC	Time from perigee.
33	GETI	00XXX. HRS 000XX. MIN 0XX.XX SEC	GETI - ground elapsed time of ignition.
34	Time of event	00XXX. HRS 000XX. MIN 0XX.XX SEC	
35	Time from event	00XXX. HRS 000XX. MIN 0XX.XX SEC	
36	Time of CMC clock	00XXX. HRS 000XX. MIN 0XX.XX SEC	
37	GETI (TPI)	00XXX. HRS 000XX. MIN 0XX.XX SEC	
39	ΔT for transfer	00XXX. HRS 000XX. MIN 0XX.XX SEC	

STA/T STEP	PROCEDURE	PANEL	REMARKS
	Mixed Nouns		
40	TF GETI/TFC	XXBXX MIN-SEC	This is a no load noun (OPR ERR).
	VG	XXXX.X FPS	
	ΔV (accum)	XXXX.X FPS	
41	Target Azimuth	XXX.XX DEG	N41 - 2 component noun.
	Elevation	XX.XXX DEG	
	Identifier	0000X	
42	Ha	XXXX.X NM	Apogee altitude.
	Hp	XXXX.X NM	Perigee altitude.
	ΔV (required)	XXXX.X FPS	
43	Lat (+North)	XXX.XX DEG	
	Long (+East)	XXX.XX DEG	
	Alt	XXXX.X NM	
44	Ha	XXXX.X NM	Apogee altitude. This is a no load noun (OPR ERR).
	Hp	XXXX.X NM	Perigee altitude.
	TFF	XXBXX MIN-SEC	Time of freefall to 49.4 NM above launch pad radius.
45	Marks (VHF/optics)	XXXXX.	This is a no load noun (OPR ERR).
	TF GETI (next burn)	XXBXX MIN-SEC	
	MGA (next burn)	XXX.XX DEG	
46	DAP config	OCTAL (R1,R2)	Loads configuration for use by RCS DAP.
47	CSM weight	XXXXX. LB	Loads vehicle weights for use by DAP's.
	LM weight	XXXXX. LB	
48	Pitch trim	XXX.XX DEG	Loads pitch and yaw trim angles.
	Yaw trim	XXX.XX DEG	
49	ΔR	XXXX.X NM	
	ΔV	XXXX.X FPS	
	Code	0000X.	
50	ΔR (miss distance)	XXXX.X NM	Negative for undershoot. This is a no load noun (OPR ERR).
	Hp	XXXX.X NM	Positive for overshoot.
	TFF	XXBXX MIN-SEC	Time of freefall.

STA/T STEP	PROCEDURE	PANEL	REMARKS
51	RHO	XXX.XX DEG	
	GAMMA	XXX.XX DEG	
52	CENTANG (active veh)	XXX.XX DEG	Central angle of active vehicle.
53	Range	XXXX.X NM	
	Range rate	XXXX.X FPS	
	Phi [lcl horiz/SLOS (+up)]	XXX.XX DEG	
54	Range	XXXX.X NM	Range to LM.
	Range rate	XXXX.X FPS	
	Theta [lcl horiz/ CSM+X (+up)]	XXX.XX DEG	+ = +X above plane.
55	Perigee code	XXXXX.	
	E	XXX.XX DEG	Elevation.
	CENTANG (passive veh)	XXX.XX DEG	Central angle of passive vehicle.
56	Re-entry angle	XXX.XX DEG	
	ΔV	XXXXX. FPS	
57	ΔR offset (SOR)	XXXX.X NM	(+ passive vehicle leads)
58	Hp alt (post TPI)	XXXX.X NM	Perigee alt (post TPI)
	ΔV (TPI)	XXXX.X FPS	
	ΔV (TPF)	XXXX.X FPS	
59	ΔV LOS 1	XXXX.X FPS	
	ΔV LOS 2	XXXX.X FPS	
	ΔV LOS 3	XXXX.X FPS	
60	G max	XXX.XX G	
	V pred	XXXXX. FPS	
	Gamma EI [lcl horiz/VI (+up)]	XXX.XX DEG	
61	Impact Lat (+North)	XXX.XX DEG	
	Impact Long (+East)	XXX.XX DEG	
	Hds up/down (+Hds up)	+/-00001	

G&C REFERENCE DATA

NORMAL/BACKUP

STA/T STEP	PROCEDURE	PANEL	REMARKS
62	VI	XXXXX. FPS	Inertial velocity.
	H dot	XXXXX. FPS	Alt Rate.
	H	XXXX.X NM	Alt above pad radius.
63	RTOGO (.05 G to splash)	XXXX.X NM	One shot display, should always be positive. .05 G represents pad loaded altitude. This is a no load noun (OPR ERR).
	VIO (at .05 G)	XXXXX. FPS	Predicted inertial velocity.
	TFE (Time from .05 G)	XXBXX MIN-SEC	
64	Drag accel	XXX.XX G	
	VI	XXXXX. FPS	Inertial velocity.
	RTOGO to target	XXXX.X NM	Negative and counting down when approaching target; positive and counting up when leaving target.
65	Sampled CMC time	00XXX. HRS 000XX. MIN 0XX.XX SEC	Fetched in interrupt.
66	Beta	XXX.XX DEG	CMD bank angle
	CRSRNG ERR	XXXX.X NM	Positive to right of plane (LATANG +South); negative to left of plane (-North).
	DNRNG ERR	XXXX.X NM	Negative for undershoot (PREDANGLE -θ); positive for overshoot.
67	RTOGO to target	XXXX.X NM	Negative counting down for approaching target; positive counting up for leaving target.
	Lat [Present position (+North)]	XXX.XX DEG	
	Long [Present position (+East)]	XXX.XX DEG	

STA/T STEP	PROCEDURE	PANEL	REMARKS
68	Beta	XXX.XX DEG	CMD bank angle.
	VI	XXXXX. FPS	Inertial velocity.
	H dot	XXXXX. FPS	Alt rate.
69	Beta	XXX.XX DEG	Beta - commanded bank angle.
	DL	XXX.XX G	DL - drag acceleration at skip out.
	VL	XXXXX. FPS	VL - skip out velocity.
70	Star code (before mark)	OCTAL	
	LMK data	OCTAL	
	Horiz data	OCTAL	
71	Star code (after mark)	OCTAL	
	LMK data	OCTAL	
	Horiz data	OCTAL	
72	Δ ang	XXX.XX DEG	(+ = active vehicle leads)
	Δ alt	XXXX.X NM	(+ = passive vehicle above)
	Search option	XXXXX.	
80	TF GETI/TFC	XXBXX MIN-SEC	
	VG	XXXXX. FPS	
	ΔV (accumulated)	XXXXX. FPS	
81	ΔVX (lcl vert)	XXXX.X FPS	(ΔV components)
	ΔVY (lcl vert)	XXXX.X FPS	
	ΔVZ (lcl vert)	XXXX.X FPS	
83	ΔVX (cont)	XXXX.X FPS	(ΔV components) cont = CSM control axes.
	ΔVY (cont)	XXXX.X FPS	
	ΔVZ (cont)	XXXX.X FPS	
84	ΔVX (other vehicle)	XXXX.X FPS	(ΔV components)
	ΔVY (other vehicle)	XXXX.X FPS	
	ΔVZ (other vehicle)	XXXX.X FPS	
85	VGX (cont)	XXXX.X FPS	(VG vector components)
	VGY (cont)	XXXX.X FPS	
	VGZ (cont)	XXXX.X FPS	
86	VGX (lcl vert)	XXXX.X FPS	(VG vector components)
	VGY (lcl vert)	XXXX.X FPS	
	VGZ (lcl vert)	XXXX.X FPS	

G&C REFERENCE DATA

NORMAL/BACKUP

STA/T STEP	PROCEDURE			PANEL	REMARKS
87	Mark data	Shaft	XXX.XX DEG		
		Trunnion	XX.XXX DEG		
88	Planet	X	.XXXXX		Unit position vector.
		Y	.XXXXX		
		Z	.XXXXX		
89	LMK	Lat (+North)	XX.XXX DEG		
		Long/2 (+East)	XX.XXX DEG		
		Alt	XXX.XX NM		
90	Rend out of plane param	Y	XXX.XX DEG		
		Y DOT	XXXX.X FPS		
		PSI	XXX.XX DEG		
91	OCDU angles	Shaft	XXX.XX DEG		
		Trunnion	XX.XXX DEG		
92	New OCDU angles	Shaft	XXX.XX DEG		
		Trunnion	XX.XXX DEG		
93	Delta gyro angles	X Gyro	XX.XXX DEG		
		Y Gyro	XX.XXX DEG		
		Z Gyro	XX.XXX DEG		
95	Pref att (FDAI angles)	Roll	XXX.XX DEG		Pref tracking attitude ICDU angles.
		Pitch	XXX.XX DEG		
		Yaw	XXX.XX DEG		
96	+X axis att (FDAI angles)	Roll	XXX.XX DEG		
		Pitch	XXX.XX DEG		
		Yaw	XXX.XX DEG		
97	System test inputs		XXXXX.		
			XXXXX.		
			XXXXX.		
98	System test results and inputs		XXXXX.		
			.XXXXX		
			XXXXX.		

STA/T STEP	PROCEDURE	PANEL	REMARKS

4.8.8 STAR LIST

NO.	STAR NAME (Numerical)	STAR NAME (Alphabetical)	NO.
1	Alpheratz	Acamar	6
2	Diphda	Achernar	4
3	Navi	Acrux	25
4	Achernar	Aldebaran	11
5	Polaris	Alkaid	27
6	Acamar	Alphard	21
7	Menkar	Alphecca	32
10	Mirfak	Alpheratz	1
11	Aldebaran	Altair	40
12	Rigel	Antares	33
13	Capella	Arcturus	31
14	Canopus	Atria	34
15	Sirius	Canopus	14
16	Procyon	Capella	13
17	Regor	Dabih	41
20	Dnoces	Deneb	43
21	Alphard	Denebola	23
22	Regulus	Diphda	2
23	Denebola	Dnoces	20
24	Gienah	Enif	44
25	Acrux	Fomalhaut	45
26	Spica	Gienah	24
27	Alkaid	Menkar	7

Vis Mag, Right Ascension and Declination data are relative to the numerical list.

Vis Mag	Right Ascension (hr)	Right Ascension (min)	Declination (deg)	Declination (min)
2.1	0	06	+28	53
2.2	0	42	-18	11
2.2	0	54	+60	27
0.6	1	36	-57	25
2.1	1	58	+89	06
3.4	2	57	-40	26
2.8	3	00	+03	56
1.9	3	22	+49	44
1.1	4	34	+16	26
0.3	5	12	-08	15
0.2	5	13	+45	57
-0.9	6	23	-52	40
-1.6	6	44	-16	40
0.5	7	37	+05	19
1.9	8	08	-47	14
3.1	8	50	+48	30
2.2	9	26	-08	30
1.3	10	06	+12	09
2.2	11	47	+14	46
2.8	12	13	-17	20
1.6	12	24	-62	49
1.2	13	23	-10	58
1.9	13	46	+49	30

STA/T STEP	PROCEDURE		PANEL	REMARKS				
NO.	STAR NAME (Numerical)	STAR NAME (Alphabetical)	NO.	Vis Mag	Right Ascension (hr)	Right Ascension (min)	Declination (deg)	Declination (min)
30	Menkent	Menkent	30	2.3	14	04	-36	11
31	Arcturus	Mirfak	10	0.2	14	14	+19	22
32	Alphecca	Navi	3	2.3	15	33	+26	50
33	Antares	Nunki	37	1.2	16	27	-26	21
34	Atria	Peacock	42	1.9	16	43	-68	56
35	Rasalhague	Polaris	5	2.1	17	33	+12	35
36	Vega	Procyon	16	0.1	18	36	+38	45
37	Nunki	Rasalhague	35	2.1	18	53	-26	20
40	Altair	Regor	17	0.9	19	49	+08	46
41	Dabih	Regulus	22	3.2	20	19	-14	54
42	Peacock	Rigel	12	2.1	20	23	-56	51
43	Deneb	Sirius	15	1.3	20	40	+45	09
44	Enif	Spica	26	2.5	21	42	+09	42
45	Fomalhaut	Vega	36	1.3	22	56	-29	49

4.8.9 CHECKLIST REFERENCE CODES (V50 N25)

R1 Code	ACTION	FUNCTION
00014	Key in	Fine align option
00015	Perform	Target acquisition
00016	Key in	Terminate mark option
00017	Perform	Additional sightings
00031	Key in	Engine on option
00035	Perform	CMC preparation
00036	Perform	Thrust termination
00041	Switch	CM/SM sep to up
00062	Switch	CMC power down

Target (celestial body) acquisition - Used in conjunction with N71 and the following celestial body codes:

00 - Planet (any planet except Earth)
01 to 45 - Star
46 - Sun
47 - Earth
50 - Moon

STA/T STEP	PROCEDURE	PANEL	REMARKS
00202	Key in	Sighting check option	
00203	Switch	SC CONT to CMC, CMC MODE to AUTO	
00204	Key in	Enable gimbal trim option	
00400	Switch	SPS ready to on	
00402	Switch	LV GUID - CMC	

4.8.10 OPTION CODES (V04 N06)

R1 Code	Purpose	Input for R2	REMARKS
00001	Specify IMU orientation	1 = PREF 2 = NOM 3 = REFSMMAT 4 = Ldg site	Specified option codes will be flashed in R1 in conjunction with V04 N06. Requests desired option be loaded into R2.
00002	Specify vehicle	1 = This vehicle 2 = Other vehicle	
00003	Specify tracking attitude	1 = PREF 2 = +X axis	

4.8.11 ALARM CODES (V05 N09)

For V05 N09 Displays:
R1 0XXXX First alarm to occur after last RSET.
R2 0XXXX Second alarm to occur after last RSET.
R3 0XXXX Alarm which occurred last.

00110	No mark since last mark reject	
00112	Mark not being accepted	
00113	No inbits (chan 16)	
00114	Mark made but not desired	
00115	Optics torque request with switch not at CMC	EXT VERB optics CDU.

STA/T STEP	PROCEDURE	PANEL	REMARKS
00116	Optics switch altered before 15 sec zero time elapsed		
00117	Optics torque request with optics not available (OPT IND = -0)		EXT VERB optics CDU while program has reserved the optics for internal use.
00120	Optics torque request with optics not zeroed		
00205	Bad PIPA reading		
00206	Zero encode not allowed with coarse align and gimbal lock (MGA $\geq 70°$)		
00207	ISS turn-on request not present for 90 sec		
00210	IMU not operating		
00211	Coarse align error		
00212	PIPA fail, but PIPA is not being used		
00213	IMU not operating with turn-on request		
00214	Program using IMU when turned OFF		
00215	Preferred orientation selected but not specified		P52, P54
00217	Bad return from stall routines		
*00401	Desired gimbal angles yield gimbal lock (MGA $\geq 59.5°$)		
00404	Target out of view (90 deg test)		R52
00405	Two stars not available		P52
00406	Rend navigation not operating		R22
00407	Target out of view (50 deg test)		R52
00421	W-matrix overflow		

*Generates restart. 00401 in certain cases will generate a restart.

STA/T STEP	PROCEDURE	PANEL	REMARKS
00607	Hyperbolic velocity		
00611	No TIG for given ELEV angle		P34, P74
01102	CMC self test error		Self check
*01103	Unused CCS branch executed		Abort
*01104	Delay routine busy		
01105	Downlink too fast		
01106	Uplink too fast		
01107	Phase table failure assume erasable memory is destroyed		Restart
01110	Restart with no active phase		Restart
01111	Restart with active phase		Restart
*01201	Executive overflow - no vac. area		
*01202	Executive overflow - no core sets		
*01203	Waitlist overflow - too many tasks		
*01206	Second job attempts to go to sleep via keyboard and display program		
*01207	No vac. area for marks		
*01210	Two programs using device at same time		
01211	Illegal interrupt of extended verb		
*01301	Arcsin-arccos input angle too large		
*01302	SQRT called with negative argument		
01401	TESTIDX too large in integrated test. End test		CSM/Saturn integr test
01402	An illegal quantity loaded in the jet or engine task erasable		CSM/Saturn integr test
01403	An illegal quantity loaded in the SPS or Saturn steering task		CSM/Saturn integr test
01404	Integrated test. Please perform task 401, 402 or 403 failed. End test		CSM/Saturn integr test

*Generates restart.

STA/T STEP	PROCEDURE	PANEL	REMARKS
01405	ICDU's busy during Saturn steering test. End test		CSM/Saturn integr test
01407	VG increasing		
01410	Thrust too low for cross-product steering		
01411	IRIG scale factor test alarm or last CDU pulse missed		
01412	Bad pulse torque of gyros XCDU out of limits		
01413	Bad pulse torque of gyros YCDU out of limits		
01414	Bad pulse torque of gyros ZCDU out of limits		
01426	IMU unsatisfactory		P61, P62
01427	IMU reversed		P61, P62
*01501	Keyboard and display alarm during internal use (NVSUB).		
*01502	Illegal flashing display		
01520	V37 request not permitted at this time		V37
01600	Overflow in drift test		
01601	Bad IMU torque abort		
01602	Bad optics during verification		
01703	Less than 45 secs to ignition		P41, P42
01704	CMC AUTO mode not selected		R61
01705	RHC in use during R61		R61
			The following list shows the general numbering logic for alarm codes excluding interfaces and exceptions:
			00100-00200 Optics subsystem
			00200-00300 IMU subsystem

*Generates restart.

STA/T STEP	PROCEDURE	PANEL	REMARKS
			00400-00600 Rendezvous 01100-01200 Computer hardware malfunctions 01200-01300 List overflows (all aborts) 01300-01400 Interpreter errors 01400-01500 Display alarms 01500-01600 Keyboard and display programs 01600-01700 System test alarms 01700-01800 DAP display alarms

4.8.12 CMC PROGRAM - ROUTINE INDEX

4.8.12.1 Programs

Phase	Program No.	Program Title	Contains Crew Interface Routines
Pre-Launch and Service	00	CMC idling	None
	01	Prelaunch or service initialization	None
	02	Prelaunch or service gyro compassing	None
	03	Prelaunch or service optical verification of gyro compassing	None
	06	Power down	R00
	07	Systems test	
Boost	11	Earth orbit insertion monitor	None
	15	Translunar injection	R00,R02,R60
	17	TPI search	R00

STA/T STEP	PROCEDURE		PANEL	REMARKS
Phase	Program No.	Program Title	Contains Crew Interface Routines	
Coast	20	Rendezvous navigation	R02,R61,R52, R00,R22,R21	
	21	Ground track determination	R00	
	22	Orbital navigation	R02,R53,R52, R00	
	23	Cislunar midcourse navigation	R00,R53	
	27	CMC update	None	
Pre-Thrusting	30	External delta V	R00	
	31	General lambert maneuver	R00	
	34	Transfer phase initiation (TP1)	R00,R22,R21	
	35	Transfer phase (midcourse)	R00,R22,R21	
	37	Return to Earth	R00	
	38	Stable orbit rendezvous (SOR)	R00	
	39	Stable orbit midcourse (SOM)	R00	
Thrusting	40	SPS	R02,R60,R00, R30	
	41	RCS	R02,R60,R30, R00	
	47	Thrust monitor	R02,R00	

STA/T STEP	PROCEDURE		PANEL	REMARKS
Phase	Program No.	Program Title	Contains Crew Interface Routines	
Alignment	51	IMU orientation determination	R53,R54,R00	
	52	IMU realign	R02,R50,R51, R00,R52, R53,R54,R55	
	53	Back-up IMU orientation determination	R56,R54,R00	
	54	Back-up IMU realign	R02,R50,R51, R00,R56, R54,R55	
Entry	61	Maneuver to CM/SM separation attitude	R60	
	62	CM/SM separation and pre-entry maneuver	None	
	63	Entry initialization	None	
	64	Post 0.05 G	None	
	65	Entry upcontrol	None	
	66	Ballistic entry	None	
	67	Final phase	R00	
Abort	74	LM transfer phase initiation (TPI) targeting	R22,R00,R21	
	75	LM transfer phase (midcourse) targeting	R22,R00,R21	
	77	LM TPI search	R00	
	78	LM stable orbit rend (SOR) targeting	R00	
	79	LM stable orbit midcourse (SOM) targeting	R00	

G&C REFERENCE DATA

NORMAL/BACKUP

STA/T STEP	PROCEDURE	PANEL	REMARKS
4.8.12.2 Routines			
Routine	Routine Title		
0	Final automatic request terminate		
2	IMU status check		
3	DAP data load		This routine is manually selected by the crew (V48E).
5	S-band antenna		This routine is manually selected by the crew (V64E).
21	Rendezvous tracking sighting mark		This routine is manually selected by the crew (V57E).
22	Rendezvous tracking data processing		
23	Backup rendezvous tracking sighting mark		This routine is manually selected by the crew (V54E).
30	Orbit parameter display		This routine may be called by the crew (V82E) or by the CMC.
31	Rendezvous parameter display routine No. 1		This routine displays range, range rate, and the angle between the CSM +X axis and local horizontal (theta). It is selected by the crew (V83E).
32	Target delta V		This routine is called by the crew (V84E).
33	CMC/LGC clock synch		
34	Rendezvous parameter display routine No. 2		This routine displays range, range rate, and the angle between the optics star line of sight and the local horizontal (phi). It is selected by the crew (V85E).
35	Lunar landing selection		
36	Rendezvous out of plane display		
41	State vector integration (mid to ave)		
50	Coarse align		
52	Auto optics positioning		This routine is automatically selected by P20 or P22. It is self-perpetuating and is terminated by R53 for star or landmark sightings.

STA/T STEP	PROCEDURE	PANEL	REMARKS
Routine	Routine Title		
53	Sighting mark		
54	Sighting data display		
55	Gyro torquing		
56	Alternate LOS sighting mark		This routine is used to perform sighting marks for the backup alignment programs P53 and P54.
57	Optics calibration		
60	Attitude maneuver		
61	Tracking attitude		This routine orients the CSM properly with respect to the target vehicle during rendezvous tracking.
62	Crew defined maneuver		This routine calls R02, R60. It is selected by the crew from P00.
63	Rendezvous final attitude		This routine calls R60 for an automatic maneuver if in P00.
64	Cislunar tracking attitude		

STA/T STEP	PROCEDURE	PANEL	REMARKS

4.8.13 CMC PROGRAM - FLAG LISTING

The flags which are applicable to Colossus programs are summarized in this section for information purposes only. Paragraph 4.8.13.1 shows the correlation between flag word numbers and erasable memory addresses while paragraph 4.8.13.2 lists the relationship between flags and programs.

4.8.13.1 Flag Word - Memory Location Correlation

Flag Word	Memory Address
0	00074
1	00075
2	00076
3	00077
4	00100
5	00101
6	00102
7	00103

STA/T STEP	PROCEDURE	PANEL	REMARKS

4.8.13.2 Flag - Program Listing

No.	Title	Code	Flag Word	Bit	Programs Using Flag	When Set	When Reset
FLAGS							
1	Rendezvous	RNDVZFLG	0	7	00,20,34,35,36 40,41,47,52,74, 75	P20 initiated	P20 terminated
2	Update	UPDATFLG	1	7	00,20,30,34,35, 40,41,47,52,74, 75	State vector updating by marks allowed	State vector updating by marks not allowed
3	Track	TRACKFLG	1	5	00,20,30,34,35, 40,41,47,52,61, 74,75	Rendezvous tracking allowed	Rendezvous tracking not allowed
4	Preferred attitude	PFRATFLG	2	4	00,40,41,52	Preferred S/C attitude computed	Preferred S/C attitude not computed
5	Steer	STEERSW	2	11	40	Steering to be done	Steering omitted
6	Standby	STBYFLAG	3	11	05,06	CMC was in standby	CMC was not in standby
7	IMU orientation known (REFSMMAT)	REFSMFLG	3	13	05,06,11,20,30, 34,40,41,47,51, 52	REFSMMAT good	REFSMMAT not good

STA/T STEP	PROCEDURE				PANEL	REMARKS	
No.	Title	Code	Flag Word	Bit	Programs Using Flag	When Set	When Reset
8	IMU	IMUSE	0	8	06,11,20,30,34, 40,41,47,51,52	IMU in use	IMU not in use
9	State vector	VEHUPFLG	1	8	20	CMC state vector updated	LM state vector updated
10	Terminate	TERMIFL7	7	15	20,34,35,51,74, 75	Terminate R21,R22	Do not terminate
11	Trunnion drive	TRUNFLAG	0	4	20	Enables CMC control of optic trunnion	CMC control of optics trunnion not enabled
12	Target 1	TARG1FLG	1	10	20	Sighting LM	Not sighting LM
13	Target 2	TARG2FLG	1	9	22,51	Sighting landmark	Sighting star
14	W matrix	RENDWFLG	5	1	20	W matrix valid	W matrix invalid
15	3 axis	3AXISFLG	5	6	20,40,41,61	Maneuver specified by 3 axes	Maneuver specified by 1 axis
16	External delta V	XDELVFLG	2	8	30,34,40	External delta V VG computations	Lambert VG computations
17	Active vehicle	AVFLAG	2	5	34,35,74,75	LM active	CSM active

STA/T STEP	PROCEDURE				PANEL	REMARKS	
No.	Title	Code	Flag Word	Bit	Programs Using Flag	When Set	When Reset
18	Final computation	FINALFLG	2	6	34,74	Final pass through rendez-vous program computations	Interim pass through rendez-vous program computations
19	Sighting mark	R53FLAG	0	6	20,51,52	V51 initiated	V51 not initiated
20	Auto/manual	AUTMANSW	3	15	40,41,61,20, 51,52	Do maneuver manually	Do maneuver using KALCMANU
21	Stick flag		1	14	20,40,41,61	RHC out of detent (auto maneuver not enabled)	RHC in detent (auto maneuver enabled)
NON-FLAGS							
1	Mark	MARKSTAT	1320*	10	20,51,52	After sighting mark	After mark reject
2	ISS zero	IMODES30	1310*	9	06,11,20,30,34, 40,41,47,51,52, 53,54	IMU operate bit present	IMU operate bit not present

*Memory address

STA/T STEP	PROCEDURE	PANEL	REMARKS
	4.9 G&C REFERENCE MODES		
	This section provides information about basic G&C functions by defining them in terms of system operating prerequisites and switch positions which together represent reference modes. Their scope is limited to independent system functions. These reference modes are repeatable and are applicable to all G&C procedures and thus are referenced in all subsequent sections of G&C procedures. The modes, however, are NOT intended to be complete or self-contained procedures.		
	Wherever a step in one of these G&C reference modes references another mode, the title and paragraph number of the referenced mode is shown and the recommended options in the mode, if any, are specified. Only those switches which are required to be in unique positions are shown in the affected step after the mode is referenced.		
	During time-critical mission phases, reference to other sections of the AOH cannot be accommodated, and, therefore, all time-critical operations are self-contained. Modes similar to those shown in this section, however, are contained or repeated within the time-critical procedures.		
	4.9.1 ATTITUDE CONTROL		
	4.9.1.1 <u>SCS Channel Selection</u>		Provides methods for enabling auto coils of RCS without undesirable jet firings.
	1 Set power switches		
CDR	LOGIC 2/3 PWR - on (up)	7	Supplies 28 vdc to SC CONT switch, THC CW switch and ATT 1 RATE 2 and RATE 2 positions of BMAG MODE switches.
	SCS SIG CONDR/DR BIAS (both) - AC1 or AC2		Required for RCS jet on-off TLM.
	2 Enable auto coils		
	For CMC control SC CONT - CMC CMC MODE - FREE	1	BMAG's should be caged to prevent them from hitting their stops if CMC maneuver >17° is planned.

STA/T STEP	PROCEDURE	PANEL	REMARKS
CDR	MAN ATT (3) - MIN IMP or RATE CMP AUTO RCS SEL (16) - MNA or MNB	1	ACCEL CMD inhibits CMC outputs to jets.
	For SCS control		
	a. SC CONT - SCS		
	or SC CONT - CMC THC - CW		
	b. BMAG MODE (3) - RATE 2		BMAG MODE or MAN ATT switching cages BMAG's and prevents attitude error signals from causing jet firings.
	or MAN ATT (3) - MIN IMP or ACCEL CMD		
	c. AUTO RCS SEL (16) - MNA or MNB	8	16 switches should be set for CMC control. For SCS control, switches should be set by quad and rotation axis, as desired.
	4.9.1.2 <u>SCS Minimum Impulse</u>		
	1 Set power switches SCS ELEC PWR - GDC/ECA or ECA	7	Either position is required for minimum impulse generator.
	LOGIC 2/3 PWR - on (up) SCS SIG CONDR/DR BIAS (both) - AC1 or AC2		Supplies 28 vdc to SC CONT switch, and THC CW switch. Required for RCS jet on-off TLM.
	RHC PWR NORM (both) - AC/DC	1	
	2 Select minimum impulse control MAN ATT - MIN IMP SC CONT - SCS		Switches should be set by axis as desired.
	or SC CONT - CMC THC - CW		

STA/T	STEP	PROCEDURE	PANEL	REMARKS
CDR	3	To enable auto coils, para 4.9.1.1		
		AUTO RCS SEL (16) - MNA or MNB	8	16 switches should be set for CMC control. For SCS control, switches should be set by quad and rotation axis, as desired.
		4.9.1.3 <u>SCS Acceleration Command</u>		
	1	Set power switches		
		LOGIC 2/3 PWR - on (up)	7	Supplies 28 vdc to SC CONT switch.
		SCS SIG CONDR/DR BIAS (both) - AC1 or AC2		Required for RCS jet on-off TLM.
		RHC PWR NORM (both) - AC/DC	1	
	2	Select acceleration command control		
		MAN ATT - ACCEL CMD		Switches should be set by axis as desired.
	3	Enable auto coils, para 4.9.1.1		Either CMC or SCS control is permissible.
		AUTO RCS SEL (16) - MNA or MNB	8	16 switches should be set for CMC control. For SCS control, switches should be set by quad and rotation axis as desired.
		4.9.1.4 <u>SCS Attitude Hold/Rate Command</u>		
	1	Set power switches		
		LOGIC 2/3 PWR - on (up)	7	Supplies 28 vdc to SC CONT switch.
		SCS ELEC PWR - GDC/ECA or ECA		
		SCS SIG CONDR/DR BIAS (both) - AC1 or AC2		Required for RCS jet on-off TLM.
		BMAG PWR (both) - ON		If rate damping only is desired, BMAG 1 need not be turned ON but should be set to WARMUP.

STA/T	STEP	PROCEDURE	PANEL	REMARKS
	2	Enable auto coils, para 4.9.1.1		
CDR		For CMC control SC CONT - CMC CMC MODE - FREE AUTO RCS SEL (16) - MNA or MNB	1	BMAG's should be caged to prevent them from hitting their stops if CMC maneuver >17° is planned.
		For SCS control		
		a. SC CONT - SCS		
		or SC CONT - CMC THC - CW		
		b. BMAG MODE (3) - RATE 2		BMAG MODE or MAN ATT switching cages the BMAG's and prevents attitude error signal from causing jet firings.
		or MAN ATT (3) - MIN IMP or ACCEL CMD		
		c. AUTO RCS SEL (16) - MNA or MNB	8	16 switches should be set for CMC control. For SCS control, switches should be set by quad and rotation axis as desired.
	3	Establish attitude hold MAN ATT - RATE CMD SC CONT - SCS	1	Switches may be set by axis as desired.
		or SC CONT - CMC THC - CW		
		BMAG MODE - ATT 1 RATE 2		

STA/T	STEP	PROCEDURE	PANEL	REMARKS
	4.9.1.5	CMC Acceleration CMD/Minimum Impulse		
	1	The following are required CMC - on, para 4.10.1.2 ISS - on, para 4.10.1.2 RCS DAP - load and activate, para 4.10.1.6 & 8		CMC, ISS, and RCS DAP enable autopilot control. Minimum impulse controller is located on panel 122 in LEB and will provide minimum impulse commands in this mode. RHC will provide normal acceleration commands.
CDR	2	Set power switches LOGIC 2/3 PWR - on (up)	7	Supplies 28 vdc to SC CONT switch. Required for RCS jet on-off TLM.
		SCS SIG CONDR/DR BIAS (both) - AC1 or AC2		
		RHC PWR NORM (both) - AC/DC	1	
	3	Enable auto coils for CMC control, para 4.9.1.1 SC CONT - CMC CMC MODE - FREE MAN ATT (3) - MIN IMP or MAN ATT (3) - RATE CMD BMAG MODE (3) - RATE 2		ACCEL CMD position inhibits CMC outputs to the jets.
		AUTO RCS SEL (16) - MNA or MNB	8	16 switches should be set for CMC control. For SCS control, switches should be set by quad and rotation axis as desired.
	4.9.1.6	CMC Attitude Control - Auto/Hold		
	1	The following are required CMC - on, para 4.10.1.2 ISS - on, para 4.10.1.2 RCS DAP - load and activate, para 4.10.1.6 & 8		CMC, ISS, and RCS DAP enable autopilot control.

STA/T	STEP	PROCEDURE	PANEL	REMARKS
CDR	2	Set power switches		
		LOGIC 2/3 PWR - on (up)	7	Supplies 28 vdc to SC CONT switch.
		SCS SIG CONDR/DR BIAS (both) - AC1 or AC2		Required for RCS jet on-off TLM.
	3	Enable auto coils, para 4.9.1.1		
		For CMC Control		
		SC CONT - CMC	1	
		CMC MODE - FREE		
		MAN ATT (3) - MIN IMP or RATE CMD		ACCEL CMD inhibits CMC outputs to jets.
		AUTO RCS SEL (16) - MNA or MNB		
		For SCS Control		
		a. SC CONT - SCS		
		or SC CONT - CMC THC - CW		
		b. MAN ATT (3) - MIN IMP		ACCEL CMD position inhibits CMC outputs to the jets.
		or MAN ATT (3) - RATE CMD BMAG MODE (3) - RATE 2		
		c. AUTO RCS SEL (16) - MNA or MNB	8	Either CMC or SCS control may be used. 16 switches should be set for CMC control. For SCS control, switches should be set by quad and rotation axis as desired.
	4	Establish attitude control		
		MAN ATT (3) - RATE CMD or MIN IMP	1	
		SC CONT - CMC		
		CMC MODE - HOLD or AUTO		AUTO position must be selected when CMC automatic maneuver is desired.

STA/T	STEP	PROCEDURE	PANEL	REMARKS
	4.9.1.7	SIVB Attitude Control		Describes condition required to enable RHC rate control (0.5°/sec) of SIVB. IU limits rate in pitch and yaw to 0.3°/sec for attitude maneuvers.
	1	The following are required ISS - on, para 4.10.1.2 CMC - on, para 4.10.1.2 LOGIC 2/3 PWR - on (up)	7	Supplies power for caging BMAG's via BMAG MODE switches.
	2	Enable att control		
CMP		Saturn DAP activated, para 4.10.1.8	2,140	Load 3 in configuration option of DAP activation procedure.
		LV GUID - CMC	2	BMAGs should be caged during SIVB maneuvers to prevent them from hitting their stops. AUTO RCS SEL switches should be off to prevent SM jet firing.
	4.9.2	DYNAMIC DISPLAY MONITOR		
	4.9.2.1	Rate Display		Provides methods for displaying rate information on rate needles of FDAI 1 or FDAI 2, or both, as desired.
	1	Set power switches		
CDR		FDAI/GPI PWR - 1, 2 or BOTH	7	Provides power for display electronics. Position chosen depends on which FDAI(s) is desired.
		LOGIC 2/3 PWR - on (up)		Provides 28 vdc source (logic bus 2) for OFF position of .05 G switch.
		BMAG 2 PWR - ON (required if BMAG 2 desired) BMAG 1 PWR - ON (required if BMAG 1 desired)		Either BMAG 1 or BMAG 2 may be selected to provide information. BMAG 2 is normally used and BMAG 1 provides backup capability.

STA/T	STEP	PROCEDURE	PANEL	REMARKS
	2	Select desired rate source		Switches should be set by axis as desired.
CDR		BMAG MODE - RATE 2 or ATT 1 RATE 2	1	Selects BMAG 2.
	or	BMAG MODE - RATE 1		Selects BMAG 1.
	3	Select display configuration		
		FDAI SEL - 1		Displays rate from BMAG 1 or 2 on FDAI 1 only.
	or	FDAI SEL - 2		Displays rate from BMAG 1 or 2 on FDAI 2 only.
	or	FDAI SEL - 1/2		Displays rate from BMAG 1 or 2 on both FDAI's.
	4.9.2.2	Attitude Error Display - BMAG Source		Provides methods for displaying BMAG 1 attitude error information on attitude error needles of FDAI 1 or FDAI 2. Needles display attitude excursion from point at which BMAG's are unchanged up to maximum of 17°.
	1	Set power switches		
		FDAI/GPI PWR - 1, 2 or BOTH	7	Provides power for display electronics. Position chosen depends on which FDAI(s) is desired.
		LOGIC 2/3 PWR - on (up)		Supplies power for caging BMAG's via BMAG MODE switches.
		BMAG 1 PWR - ON		Powers BMAG's in gyro assembly 1, only BMAG's capable of providing attitude error information.
	2	Provide attitude error information		Switches should be set by axis as desired. The RATE CMD position is required to uncage BMAG 1. However, MAN ATT and RHC breakout switches are overridden by IGN 2 logic signal during thrusting to uncage BMAG's.
		MAN ATT - RATE CMD	1	
		BMAG MODE - ATT 1 RATE 2		
		.05 G sw - OFF		On (up) position is not desirable (cage BMAG's).

STA/T	STEP	PROCEDURE	PANEL	REMARKS
		RHC - neutral		If RHC breakout switches are activated, BMAG's are caged (by axis) and attitude hold is lost.
CDR	3	Select display configuration	1	
		a. FDAI SEL - 1/2		Displays attitude error from BMAG 1 on FDAI 2.
	or	b. FDAI SEL - 1 or 2 FDAI SOURCE - GDC		Displays attitude error from BMAG 1 on FDAI 1 or 2. This position required when only one FDAI is selected.
	4.9.2.3	<u>Attitude Error Display - CMC Source</u>		Provides G&N computed attitude error in control axes. Information is meaningful only when computer program defines desired attitude.
	1	The following are required CMC - on, para 4.10.1.2 ISS - on, para 4.10.1.2		 Required to compute error and mode CDU's. Required for attitude information.
	2	Set power switches FDAI/GPI PWR - 1, 2 or BOTH	7	Provides power for display electronics. Position chosen depends on which FDAI(s) is desired.
		LOGIC 2/3 PWR - on (up)		Provides power for FDAI switches.
	3	Select display scaling FDAI SCALE - 5/5 or 5/1	1	Positions provide for compatible scaling between CMC and display electronics in roll axis during orbital flight. If 50/15, 50/10 position is chosen, roll scaling is 12.5° full scale.
	4	Select display configuration		
		a. FDAI SEL - 1/2		Displays attitude error from CDU's on FDAI 1.

STA/T STEP	PROCEDURE	PANEL	REMARKS
CDR or	b. FDAI SEL - 1 or 2 FDAI SOURCE - CMC	1	Displays attitude error from CDU's on FDAI 1 or 2. Position required when only one FDAI is selected.
	4.9.2.4 <u>Attitude Error Display - Attitude Set Source</u>		Provides methods for displaying attitude difference between attitude set indicators and GDC (body error) or IMU gimbal angles (Euler error).
	1 Set power switches and display logic FDAI/GPI PWR - 1, 2 or BOTH	7	Provides power for display electronics. Position depends on which FDAI is desired.
	LOGIC 2/3 PWR - on (up) FDAI SEL - 1 or 2 FDAI SOURCE - ATT SET .05 G sw - OFF	1	Display not available at 1/2 position. Required to enable attitude set input to FDAI. On (up) position is not desirable (cages BMAG's).
	2 Select attitude reference		
	a. SCS SCS ELEC PWR - GDC/ECA	7	Provides power to GDC electronics.
	BMAG 2 PWR - ON ATT SET - GDC	1	
	BMAG MODE - RATE 2 or ATT 1 RATE 2		Switches should be set by axis as desired.
	b. ISS ISS - on, para 4.10.1.2 ATT SET - IMU		Constraint: If CMC is on, an overload in IMU resolver circuitry may cause an ICDU oscillation and trigger ISS warning light. (Reference ICD MH01-01325-216). FDAI must be used only as a null meter in this mode of operation. If not, large errors will result because of impedance mismatch.
	4.9.2.5 <u>Total Attitude</u>		Provides methods for displaying Euler angles on FDAI ball from GDC or IMU.
	1 Set power switches and enable FDAI FDAI/GPI PWR - 1, 2 or BOTH	7	Provides power for display electronics. Position depends on which FDAI(s) is desired.

STA/T STEP	PROCEDURE	PANEL	REMARKS
CDR	LOGIC 2/3 PWR - on (up)	7	Supplies power for FDAI, BMAG MODE switches and ATT SET switch (IMU position).
	CMC ATT - IMU	1	GDC position will cause loss of total attitude on FDAI(s).
	2 Select display and display source		
	a. ISS display ISS - on, para 4.10.1.2 FDAI 1 display		Switching required to enable IMU resolver outputs to FDAI 1 ball drive. There are three possible switch combinations.
	FDAI SEL - 1/2		
	or FDAI SEL - 1 FDAI SOURCE - CMC		
	or FDAI SOURCE - ATT SET ATT SET - IMU		Constraint: If CMC is on, an overload in IMU resolver circuitry may cause an ICDU oscillation and trigger ISS warning light. (Reference ICD MH01-01325-216). FDAI must be used only as a null meter in this mode of operation. If not, large errors will result because of impedance mismatch.
	FDAI 2 display FDAI SEL - 2 FDAI SOURCE - CMC		Switching required to enable IMU resolver outputs to FDAI 2 ball drive. There are two possible switch combinations.
	or FDAI SOURCE - ATT SET ATT SET - IMU		Constraint: If CMC is on, an overload in IMU resolver circuitry may cause an ICDU oscillation and trigger ISS warning light. (Reference ICD MH01-01325-216). FDAI must be used as a null meter in this mode of operation. If not, large errors will result because of impedance mismatch.

STA/T STEP	PROCEDURE	PANEL	REMARKS
	b. GDC display		
CDR	SCS ELEC PWR - GDC/ECA	7	Provides power to GDC electronics.
	BMAG 2 PWR - ON		
	BMAG MODE - RATE 2 or ATT 1 RATE 2	1	Switches should be set by axis as desired.
	xxxxxxxxxxxxxxxxxxxxxxxxxxxxxxxxxxxx BMAG 1 PWR - ON (if BMAG 2 fails) BMAG MODE - RATE 1 xxxxxxxxxxxxxxxxxxxxxxxxxxxxxxxxxxxx		
	FDAI 2 display FDAI SEL - 1/2 or FDAI SEL - 2 FDAI SOURCE - GDC or FDAI SOURCE - ATT SET ATT SET - GDC		Switching required to enable GDC resolver outputs to FDAI 2 ball drive. There are three possible switch combinations.
	FDAI 1 display FDAI SEL - 1 FDAI SOURCE - GDC or FDAI SOURCE - ATT SET ATT SET - GDC		Switching required to enable GDC resolver outputs to FDAI 1 ball drive. There are two possible switch combinations.

STA/T	STEP	PROCEDURE	PANEL	REMARKS
		4.9.2.6 ORDEAL - Local Horizontal Attitude		Provides methods for displaying local horizontal reference established by ORDEAL on FDAI 1 and/or FDAI 2 balls. Only pitch axis is affected.
	1	Set power switches		
CDR		FDAI/GPI PWR - 1, 2 or BOTH	7	Provides power for display electronics. Position chosen depends on which FDAI(s) is desired.
		EARTH/LUNAR - EARTH or LUNAR	13	
		LTG - BRT or DIM		
	2	Select display configuration		Reference system may be GDC or IMU, para 4.9.2.5.
		FDAI 1 display		
		FDAI SEL - 1 or 1/2	1	
		FDAI 1 sw - ORB RATE	13	
		FDAI 2 display		
		FDAI SEL - 2 or 1/2	1	
		FDAI 2 sw - ORB RATE	13	
		FDAI 1 & 2 display		
		FDAI SEL - 1/2	1	
		FDAI sw (both) - ORB RATE	13	
		4.9.3 GDC ALIGN		Permits GDC to be aligned to ATT SET thumbwheels.
		SCS ELEC PWR - GDC/ECA	7	Supplies power to GDC electronics.
		ATT SET - GDC	1	Enables att set inputs to GDC.
		GDC ALIGN pb - push		Enables att set inputs to GDC and disables BMAG inputs.

STA/T	STEP	PROCEDURE	PANEL	REMARKS
	4.9.4	SPS THRUSTING		
	4.9.4.1	<u>TVC Initialization</u>		Defines safe switch configuration required before initiation of thrusting procedures.
CDR		LOGIC 2/3 PWR - on (up)	7	Provides power to SCS TVC switches.
		SCS SIG CONDR/DR BIAS (both) - AC1 or AC2		Required for RCS jet on-off and MTVC TLM.
		SPS THRUST - NORMAL	1	
		SCS TVC (2) - RATE CMD (if burn is G&N or MTVC)		
	or	SCS TVC (2) - AUTO (SCS burn)		
		TVC GMBL DR (2) - AUTO		The 1 or 2 positions may be used as backup if required.
		FCSM SPS A - on (up)		
		FCSM SPS B - on (up) or RESET/OVERRIDE		Both FCSM switches will be on for critical burns.
		ΔV CG - LM/CSM or CSM		Required only for SCS/SPS auto thrusting. Position depends on whether LM is attached or not.
		FDAI/GPI PWR - 1, 2 or BOTH	7	Position chosen depends on whether redundant GPI displays are desired. To enable redundant GPI indicators, FDAI/GPI PWR switch must be set to BOTH.
		LV/SPS IND SII/SIVB - GPI	1	
	4.9.4.2	<u>SPS Gimbal Control</u>		
	1	CMC Control		
		ISS - on (required), para 4.10.1.2		Provides attitude information and power to the ECDU's.
		CMC - on (required), para 4.10.1.2		
		Servo loop activated (step 4)		
		Gimbal motors on		Operating time is limited depending on operating conditions. MN BUS TIE (2) must be on before gimbal motors are started.
		SC CONT - CMC		

STA/T STEP	PROCEDURE	PANEL	REMARKS
CDR	LOGIC 2/3 PWR - on (up) THC - neutral	7	Supplies power to SC CONT switch.
2	SCS Control - AUTO Servo loop activated (step 4) Gimbal motors on	1	 Operating time is limited depending on operating conditions. MN BUS TIE (2) must be on before gimbal motors are started.
	LOGIC 2/3 PWR - on (up)	7	Supplies power to SC CONT, BMAG MODE, SCS TVC, .05 G sw (OFF) position and THC CW switches.
	SCS ELEC PWR - ECA or GDC/ECA BMAG PWR (both) - ON BMAG MODE - ATT 1 RATE 2 .05 G sw - OFF SCS TVC (2) - AUTO IGN 2 logic signal present	 1	Supplies power to control electronics. Rate and attitude sensors required. Required to uncage BMAG's in GA 1. On (up) position is not desirable (cages BMAG's). Provided by thrust control logic at engine on until 1 sec after engine off.
	SC CONT - SCS THC - neutral		
or	SC CONT - CMC THC - CW		
3	MTVC control - RATE CMD/ACCEL CMD		Stick integrator is enabled when IGN 2 logic signal is present. IGN 2 logic signal present at SPS on until 1 sec after SPS - off, is provided by thrust control electronics.
	Servo loop activated (step 4) Gimbal motors on		 Operating time is limited depending on operating conditions. MN BUS TIE (2) must be on before gimbal motors are started.

G&C REFERENCE MODES

NORMAL/BACKUP

STA/T STEP	PROCEDURE	PANEL	REMARKS
CDR	LOGIC 2/3 PWR - on (up)	7	Provides power for SC CONT, BMAG MODE, SCS TVC and THC - CW switches.
	SCS SIG CONDR/DR BIAS (both) - AC1 or AC2		Required for RCS jet on-off and MTVC TLM.
	SCS ELEC PWR - ECA or GDC/ECA		Supplies power to RHC's and control electronics.
	BMAG 2 PWR - ON (for RATE CMD)		Rate information required for RATE CMD MTVC.
	BMAG MODE (3) - ATT 1 RATE 2 or RATE 2	1	
	Rate Cmd		
	a. SCS TVC (2) - AUTO SC CONT - SCS THC - CW		
	or b. SCS TVC (2) - RATE CMD SC CONT - SCS		
	or SC CONT - CMC THC - CW		
	Accel Cmd		
	a. SCS TVC (2) - ACCEL CMD SC CONT - SCS		
	or SC CONT - CMC THC - CW		
4	Servo Loop Activation		
	a. Servo loop No. 1		
	TVC SERVO PWR 1 - AC1/MNA or AC2/MNB	7	Provides power to clutches and servo drive electronics.
	TVC GMBL DR (2) - 1	1	

STA/T STEP	PROCEDURE	PANEL	REMARKS
CDR	or TVC GMBL DR (2) - AUTO THC - neutral SPS GMBL MOT 1 - operating	1	No. 1 gimbal motor must be on with no overcurrent failure sensed.
	or TVC SERVO PWR 2 - OFF	7	
	b. Servo loop No. 2 TVC SERVO PWR 2 - AC1/MNA or AC2/MNB TVC GMBL DR (2) - 2	1	
	or TVC GMBL DR (2) - AUTO LOGIC 2/3 PWR - on (up) THC - CW	7	Provides power to THC - CW switch.
	or TVC GMBL DR (2) - AUTO SPS GMBL MOT 1 - not operating	1	If No. 1 gimbal motor is off or an overcurrent is sensed, control is transformed to No. 2 servo loop.
	4.9.4.3 Thrust On-Off Control		
	1 CMC Control ISS - on (required), para 4.10.1.2 CMC - on (required), para 4.10.1.2 SPS Gimbal Control (desired), para 4.9.4.2 SC CONT - CMC		
	LOGIC 2/3 PWR - on (up)	7	Supplies 28 vdc to SC CONT switch.
	SPS THRUST - NORMAL	1	DIRECT ON will override CMC thrust-on control.
	ΔV THRUST A and/or B - NORMAL		
	Thrust on CMC engine on command (P40)		

STA/T STEP	PROCEDURE	PANEL	REMARKS
CDR	Thrust off CMC engine off command (P40)	1	
	or ΔV THRUST A and/or B - OFF		
2	SCS Control SPS Gimbal Control, para 4.9.4.2 SC CONT - SCS LOGIC 2/3 PWR - on (up) SPS THRUST - NORMAL ΔV THRUST A and/or B - NORMAL	 7 1	 Supplies 28 vdc to SC CONT switch. DIRECT ON will override SPS thrust control.
	Thrust on ΔV ind - not zero THRUST ON pb - push		 Required only if EMS FUNC is in ΔV or ΔV TEST.
	Thrust off EMS FUNC - ΔV ΔV ind - zero		
	or ΔV THRUST A and/or B - OFF		
3	Direct Control Thrust on ΔV THRUST A and/or B - NORMAL SPS THRUST - DIRECT ON		
	Thrust off ΔV THRUST A and/or B - OFF		

STA/T STEP	PROCEDURE	PANEL	REMARKS
	4.9.5 OPTICS CONTROL		
	4.9.5.1 <u>Auto Optics Positioning</u>		Procedure permits CMC control of optics.
	1 The following are required ISS - on, and orientation known, para 4.10.1.2 & 4.11 CMC - on, para 4.10.1.2 Optics - on, para 4.10.1.4		
	2 Establish CMC control		
CMP	OPT ZERO - OFF	122	
	OPT TELTRUN - SLAVE TO SXT		Required for SCT trunnion drive.
	OPT MODE - CMC		
	4.9.5.2 <u>Manual Optics Control</u>		Permits manual control of optics using optics hand control (OHC).
	1 The following are required Optics - on, para 4.10.1.4		
	2 Establish manual control and sighting options		
	OPT ZERO - OFF		
	OPT COUPLING - DIRECT or RSLV		Permits desired image motion in FOV. DIRECT causes motion relative to vehicle while RESOLVED causes motion relative to eye.
	OPT MODE - MAN		
	OPT TELTRUN - SLAVE TO SXT		Required for proper landmark tracking.
	or 0°		Provides zeroing of SCT trunnion axis.
	or 25°		Provides greater scanning capability for star sightings.
	OPT SPEED - HI, MED or LO		Set as desired.

STA/T	STEP	PROCEDURE	PANEL	REMARKS
	4.9.5.3	Manual Optics Drive		Permits manual optics operation (no power) using optics tool.
	1	The following are required		
LMP		G/N PWR - AC1 or AC2	5	Supplies power for condition lamps and reticle.
CMP		G/N OPT PWR - OFF	100	
	2	Obtain optics tool from tool kit		
	3	Perform manual optics drive		
		RETCL BRT tw - as required	122	
		SHAFT - as desired	121	
		TRUN - as desired		
	4.9.6	ENTRY MONITOR SYSTEM (EMS)		
	4.9.6.1	ΔV Test		
	1	Initial EMS preparation		
CDR		Verify EMS FUNC - OFF	1	
		cb EMS (2) - close	8	
		EMS MODE - STBY	1	
		Adjust alphanumeric brightness (option)		
	2	EMS FUNC - ΔV SET		Enables slewing of ΔV ind.
		Set ΔV ind to +1586.8 fps		
	3	EMS FUNC - ΔV TEST		ΔV TEST checks ΔV circuitry.
		SPS THRUST lt - on		
		ΔV ind decreases (10 sec)		
		SPS THRUST lt - off at approx -0.1 fps on ΔV ind		
		ΔV ind stops at -20.8±20.7 fps		
	4	EMS MODE - STBY		

STA/T	STEP	PROCEDURE	PANEL	REMARKS
		4.9.6.2 <u>ΔV Setup</u>		Specifies required steps necessary prior to a ΔV to initialize EMS for monitoring and cutoff of an SPS burn.
		EMS Orbit Change Test (desired), para 4.13.2		
CDR		cb EMS (2) - close	8	
	1	EMS MODE - STBY EMS FUNC - ΔV SET	1	
	2	Set ΔV ind - required ΔV		
	3	EMS FUNC - ΔV		10 to 30 sec prior to ullage initiation, EMS FUNC should be placed to AUTO. This time constraint will minimize buildup of erroneous signals due to accelerometer bias.
		4.9.6.3 <u>RSI Alignment</u>		Provides positioning roll stability indicator (RSI) of EMS to any desired position for backup roll attitude indication at 0.05 G.
		SCS ELEC PWR - GDC/ECA	7	
		ATT SET - GDC	1	
	1	EMS ROLL - on (up) GDC ALIGN pb - push, hold ATT SET YAW tw - position RSI GDC ALIGN pb - rel EMS ROLL - OFF		
	2	ATT SET YAW tw - reset GDC ALIGN pb - push (32 sec max)		This step is required only if GDC had been aligned and realignment is required.

STA/T	STEP	PROCEDURE	PANEL	REMARKS
	4.9.6.4	Entry Test		RSI upper lt (G >.2) and RSI lower lt (G <.2) are relevant to entry from lunar mission. G >.2 light provides cue for start of program 67.
	1	Initial EMS preparation		
CDR		Verify EMS FUNC - OFF	1	
		cb EMS (2) - close	8	
		EMS MODE - STBY	1	
		Adjust alphanumeric brightness (option)		
	2	EMS FUNC - EMS TEST 1 Wait 5 seconds		Test 1 checks lower trip point of 0.05 G comparator. ΔV/EMS SET switch is used both for slewing G-V scroll and for setting RANGE ind.
	3	EMS MODE - AUTO (wait 10 sec minimum)		EMS considered stable after 10 seconds.
		Check ind lts - off		
		RANGE ind - 0.0		
		Slew scroll until hairline is superimposed on notch in self-test pattern		EMS scroll reverse slew capability is limited to one inch.
	4	EMS FUNC - EMS TEST 2 (wait 10 sec) .05 G lt - on (all others off)		Test 2 checks upper trip point of 0.05 G comparator. Considered stable in test 2 configuration after 10 sec.
	5	EMS FUNC - EMS TEST 3 .05 G lt - on RSI lower lt - on (10 sec after .05 G lt)		Test 3 checks the trip point of the RSI lower light (G <.2).
		Set RANGE ind to 58 NM ±0.0		For negative numbers, RANGE ind will display minus number in most significant decade. No sign will appear for positive numbers.

STA/T	STEP	PROCEDURE	PANEL	REMARKS
CDR	6	EMS FUNC - EMS TEST 4 .05 G lt - on (all others off) G-V trace (during 10-sec period) within test pattern After 10 sec, G-V trace stops at lower right corner of test pattern at ≈9g RANGE ind (during 10-sec period) counts toward zero. After 10 sec, stops at ≈0±0.2	1	Test 4 checks range-to-go integrator circuits, G-servo circuit, G-V plotter, and range-to-go circuits.
	7	EMS FUNC - EMS TEST 5 .05 G lt - on RSI upper lt - on (10 sec after .05 G lt) RANGE ind - 0.0 Scribe traces vertical line ≈9g to 0.22±0.1 and stops (trace within test pattern)		Test 5 checks trip point of RSI upper light (G >.2).
	8	EMS MODE - STBY EMS FUNC - RNG SET G-V traces vertical line at approx 0.22 G to 0±0.1 and stops		
	4.9.6.5	Range Indicator and Vo Setup		Provides for initialization of EMS range-to-go display and scroll prior to entry.
		EMS DEORBIT & ENTRY TEST (desired), para 4.16.2 cb EMS (2) - close	8	
	1	EMS MODE - STBY EMS FUNC - RNG SET	1	

NORMAL/BACKUP

STA/T	STEP	PROCEDURE	PANEL	REMARKS
CDR	2	Set RANGE ind - desired range-to-go	1	
	3	EMS FUNC - Vo SET Slew scroll - superimpose predicted value of initial velocity on G-V display index (arrow)		Scroll can be slewed only one inch in reverse. After scroll has been slewed one inch past 37,000 ft/sec point, it will no longer be possible to switch back to RNG SET position to change value in RANGE ind. This is because RNG SET position also initializes range integrator to 37,000 ft/sec. In the Vo SET position, both initial velocity in range integrator and scroll are simultaneously changed.
	4	EMS FUNC - ENTRY		EMS MODE switch will be placed to AUTO after CM/SM SEP and vehicle stabilization at entry attitude.

STA/T STEP	PROCEDURE	PANEL	REMARKS

4.10 G&C GENERAL PROCEDURES

The procedures in this section involve both the G&N and SCS and are used most frequently during the orbital phase. Because they are fundamental to G&C operation, they are included or referenced in various forms in the more complex G&C procedures contained in sections 4.5, 4.6 and 4.11 through 4.18.

Applicable G&C Reference Modes, para 4.9, have been referenced throughout these procedures.

STA/T	STEP	PROCEDURE	PANEL	REMARKS
	4.10.1	G&N GENERAL		
	4.10.1.1	CMC Idling Program (P00)		Indicates that CMC is in operate condition but not performing control or computation operations requiring coordination with other crew tasks. Maintains CMC in readiness for entry into most programs. State vector is updated at 9-min intervals.
CMP		Key V37E 00E DSKY - P00	2,140	
	4.10.1.2	Startup Procedure (TBD)		
	4.10.1.3	CMC Power Down (P06)		Transfers CMC from operate to standby. When P06 selected, CMC must be powered down to standby.
	1	Key V37E 06E DSKY P06		
	2	FL V50 N25 00062 (CMC pwr down) PRO (push till STBY lt - on) CMC blanks DSKY displays		
	4.10.1.4	Optics Power Control		
	1	Optics power up		
LMP		G/N PWR - AC1 or AC2	5	Provides power to reticle and condition lts in LEB.
CMP		G/N OPT PWR - on (up)	100	
		OPT MODE - MAN	122	
		OPT ZERO - ZERO (15 sec)		
		COND LAMPS - ON		
		RETCL BRT tw - adjust		

STA/T	STEP	PROCEDURE	PANEL	REMARKS
	2	Optics power down		
CMP		OPT ZERO - ZERO	122	
		G/N OPT PWR - OFF	100	
LMP		G/N PWR - OFF	5	Removes power from reticle and condition lts in LEB.
	4.10.1.5	CSM - CMC Update (P27)		P27 may be entered only from P00, P01, P02, P03.
		CMC - on (required), para 4.10.1.2		
CMP		Key V37E 00E	2,140	
		DSKY - P00		
		Auto Update		
	1	UP TLM CM - ACCEPT	2	
		UP TLM - ACCEPT	122	
		UPLINK ACTY lt - on		
	2	Update complete		
		UPLINK ACTY lt - out	2,122	PROG window on DSKY display 00.
		UP TLM CM - BLOCK	2	
	or	UP TLM - BLOCK	122	
		Voice Transmission Update		
	1	Liftoff time - V70E		
	or	Load data block - V71E		
	or	Load singular data - V72E		
	or	Octal time increment - V73E		

STA/T	STEP	PROCEDURE	PANEL	REMARKS
CMP	2	DSKY P27	122	P27 may be terminated by responding to flashing display with V34E. Data will not be incorporated for use by CMC.
	3	FL V21 N01 R1 Blank R2 Unchanged R3 AAAAA Key in update data, XXXXXE (R1) CMC increments R3 by 1 Repeat step 3 until all data loaded		
	4	FL V21 N02 R1 Blank R2 Unchanged R3 01026	2,140	
		Accept update PRO P00 - selected automatically Reject update Load Octal Identifier (XXE) of word to be corrected Return to step 3		Data is transferred from buffer storage to appropriate cells
		Time Update (Decimal)		
	1	Key V55E Poss OPR ERR (other extended verb active)		

STA/T	STEP	PROCEDURE	PANEL	REMARKS
CMP	2	FL V21 N24 (V25)	2,140	
		Δ time (CMC clock)	00XXX.E HRS 000XX.E MIN 0XX.XXE SEC	Delta time change must be all of one polarity (+ or -).
		Accept Load Δ CMC time Reject PRO or V34E		
	3	Check Updated CMC Time V16N 36E V37E 00E		DSKY displays R1, R2, R3 for crew verification. CMC returns to P00.
		Erasable Memory Update		
	1	Key V37E 00E		
	2	For Sequential Address V21 N01E Load first address Load first data word	 XXXXE XXXXXE	
		N15E Verify CMC increments address by one (R1)		
		Load second data word Load third data word	XXXXXE,E XXXXXE,E	
		Continue until last address in sequence filled		

STA/T	STEP	PROCEDURE	PANEL	REMARKS
CMP	3	For Non-sequential Address V21 N01E Load first address XXXXE Load first data word XXXXXE,E Load second address XXXXE Load second data word XXXXXE,E	2,140	
	4	To Verify Data Loaded in Seq Address V01 N01E Load first address XXXXE Check first data word in R1 N15E Check second data word in R1 ENTR Check third data word in R1 ENTR		
	4.10.1.6	<u>CSM - DAP Data Load Procedure (R03)</u>		For CMC control modes, DAP data load procedure is used to select rate, deadband, and quads. When under computer control, operating program will establish S/C rates and attitude error deadbands, or crew may select other desired rates and error deadbands via DSKY. In addition, crew has capability of selecting RCS quads for computer command of manual translation, attitude hold, or automatic and manual maneuvers.
		CMC - on (required), para 4.10.1.2		
	1	Key V48E (Bit A of R1 configures TVC DAP for LM on-off) (RCS DAP manual rate mode ineffective at 0.05°/sec)		Extended verb 48 program calls DAP data 1, 2, and 3 in sequential order. DAP data 1, 2, or 3 may also be displayed individually by using the respective verb/noun combinations, i.e., V04 N46, V06 N47, or V06 N48.

STA/T	STEP	PROCEDURE	PANEL	REMARKS
CMP	2	FL V04 N46 R1 - A B C D E R2 - A B C D E Accept PRO Reject V24E load desired data	2,140	If quads A/C and B/D (4 jets) are desired for $\pm X$ translation, R1-B and R1-C may be set to 0,0, or 1,1.
	3	FL V06 N47 CMC weight XXXXX. LBS LM weight XXXXX. LBS Accept PRO Reject Key V21E, V22E or V24E Load correct data		
	4	FL V06 N48 P Trim XXX.XX DEG Y Trim XXX.XX DEG		Trim values will be updated by CMC during burn.

R1

Vehicle Config.	Quad A/C for $\ddot{X}$	Quad B/D for $\ddot{X}$	Err Deadband	Rate Select
0 = No Dap 1 = CSM 2 = CSM & LM 3 = CSM & SIVB	0 = Fail A/C 1 = Use A/C	0 = Fail B/D 1 = Use B/D	0 = ± 0.5° 1 = ± 5.0°	0 = 0.05°/sec 1 = 0.2°/sec 2 = 0.5°/sec 3 = 4.0°/sec

R2

Roll Quad Select	Quad A	Quad B	Quad C	Quad D
0 = Use B/D 1 = Use A/C	0 = Fail 1 = Use	0 = Fail 1 = Use	0 = Fail 1 = Use	0 = Fail 1 = Use

STA/T STEP	PROCEDURE	PANEL	REMARKS
CMP	Accept PRO - Return to program in progress Reject Key V21E, V22E or V24E Load correct data	2,140	
	4.10.1.7 <u>RCS DAP Attitude Deadband Reduction Procedure</u>		This procedure will reduce RCS DAP att deadband to ±0.1°.
	CMC - on (required), para 4.10.1.2 ISS - on and orientation known (required), para 4.10.1.2 & 4.11 RCS DAP - activate (required), para 4.10.1.8 SCS - on (desired), para 4.10.2.2		
	1 Select CMC Attitude Control - auto, para 4.9.1.6		
	2 Select 0.5° deadband in RCS DAP		
	3 Key V21 N01E 3235E 11E		Specifies ±0.1° (other deadbands may be selected if desired).
	4 To Terminate THC - CW Key V46E		DAP returns to deadband configuration in R03.

STA/T	STEP	PROCEDURE	PANEL	REMARKS
		4.10.1.8 DAP Activation		
		(To be done first time DAP started or after fresh start)		
CDR	1	CMC MODE - FREE	1	Prevents inadvertent jet firings.
CMP	2	Key V48E Insure left digit is 0 No DAP 1 CSM 2 CSM & LM 3 CSM & SIVB PRO PRO PRO	2,140	Establishes SC configuration.
	3	Key V46E		Activates DAP.
		4.10.1.9 CSM Crew Defined Maneuver (R62)		Provides method of performing CMC controlled maneuver to crew defined attitude.
		CMC - on (required), para 4.10.1.2 ISS - on and orientation known (required), para 4.10.1.2 & 4.11 SCS - on (required), para 4.10.2.2		
CDR		CMC ATT - IMU .05 G sw - OFF	1	
CMP	1	Key V37E 00E DSKY - P00	2,140	Routine R62 may be called from P00 only.
	2	Select Total Attitude (ISS) Display, para 4.9.2.5		Both FDAI's are recommended so either reference system (IMU or GDC) may be monitored. (CMC attitude error and rate displays available.)

STA/T	STEP	PROCEDURE	PANEL	REMARKS
CMP	3	Key V49E	2,140	
	4	FL V06 N22 (final gimbal angles) R, P, Y XXX.XX DEG Accept PRO Reject V25E load desired gimbal angles (Attitude Maneuver Routine, R60)		 Provides for maneuver (automatically or manually) to specified attitude.
	5	FL V50 N18 (auto maneuver request) R, P, Y XXX.XX DEG Accept BMAG MODE (3) - RATE 2 Select CMC Attitude Control Auto, para 4.9.1.6 PRO V06 N18 R, P, Y XXX.XX DEG Monitor auto maneuver on FDAI Reject Key V62E RHC - Null FDAI needles When attitude is satisfactory ENTR		 Required gimbal angles. May be performed second time as attitude trim. Priority display. Display will remain minimum of 5 sec. At completion of maneuver, display will revert to FL V50 N18. Selects Mode 2, total attitude error on FDAI needles.

STA/T	STEP	PROCEDURE	PANEL	REMARKS
		4.10.1.10 <u>DSKY Check Procedure</u>		This procedure is used to test DSKY numerical, computer activity, and V, N flasher display functions.
		CMC - on (required), para 4.10.1.2		
CMP	1	Key V37E 00E (desired) DSKY - P00	2,140	It is convenient but not necessary to perform DSKY check during P00.
	2	Key V21 N27E 11E		Starts DSKY check.
	3	Monitor the following on DSKY		
		a. All DSKY numerical displays show 9 Wait 5.12 sec All DSKY numerical displays show 8 Wait 5.12 sec . . . All DSKY numerical displays show 0 Wait 5.12 sec		No sign will be displayed at this point.
		b. V, N flash begins COMP ACTY lt - on DSKY registers (3) display -00000 Wait 5.12 sec DSKY registers (3) display +00000 Wait 5.12 sec		

STA/T STEP	PROCEDURE	PANEL	REMARKS
CMP	c. All DSKY windows blank Wait 5.12 sec V, N flash stops COMP ACTY lt - off DSKY check complete - no manual termination required	2,140	
	4.10.1.11 <u>CMC Self-Check Procedure</u>		Procedure used to check CMC control pulses, checks CMC's ability to write into and read out of erasable memory and performs internal fixed memory bank sum.
	CMC - on (required), para 4.10.1.2		
	1 Key V25 N01E 1365E E, E, E		Zero self-check cells: ERCOUNT, SCOUNT, SCOUNT +1.
	2 Key V15 N01E - establish monitor of self-check 1365E		Begin monitor of self-check cells.
	3 Key V21 N27E 10E - starts self-check KEY REL		Starts complete self-check. Returns monitor.
	4 Monitor R2 and PROG lt		
	a. R2 becomes 5 or greater Self-check has been successfully completed at least once Key V21 N27E 0E terminates self-check		Turns off self-check.

STA/T STEP	PROCEDURE	PANEL	REMARKS
CMP	b. PROG lt comes on Record R1, R2 & R3 Coordinate with MSFN	2,140	
	4.10.1.12 <u>DSKY Condition Light Test</u>		Procedure designed to test CMC/caution and warning, DSKY interface.
	CMC - on (required), para 4.10.1.2		
	1 Key V37E 00E (desired) DSKY - P00		Convenient but not necessary to perform this procedure in P00.
	2 Key V35E		
	3 Monitor the following events		
	a. All DSKY condition lts - on		
	b. ISS warning lt - on CMC warning lt - on		
	c. All DSKY numerical windows display 8 Sign positions in R1, R2, R3 show + V, N windows flash		
	Wait 5 sec		
	d. All DSKY warning lts - off		NO ATT will be left on if coarse align occurring.
	e. ISS lt - off CMC lt - off		
	f. Old PROG number will be displayed Interrupted display (if any) will be restarted		

STA/T	STEP	PROCEDURE	PANEL	REMARKS
	4.10.1.13	Measurement and Loading of PIPA Bias		
		CMC - on (required), para 4.10.1.2		
		ISS - on and orientation known (required), para 4.10.1.2 & 4.11		ISS should be on at least 1 hour prior to performing this procedure to allow PIPA's to stabilize.
		SCS - on (desired), para 4.10.1.4		Provides display and SCS control capability.
CDR		CMC ATT - IMU	1	
		.05 G sw - OFF		
		LOGIC 2/3 PWR - on (up)	7	Powers .05 G sw (OFF) position.
	1	Set Event Timer 00:00	1	
	2	Select Attitude Control desired, para 4.9.1		
		Maintain SC Rates <0.1°/sec		
CMP, CDR	3	Key V25 N21E, E, E, E, V06	2,140	Zeroes N21 cells.
00:00		Start Event Timer, ENTR simultaneously	1	
	4	Record PIPA counts		Initial values.
		X Axis PIPA _ _ _ _ _ _		Far left space is for sign.
		Y Axis PIPA _ _ _ _ _ _		
		Z Axis PIPA _ _ _ _ _ _		
04:16	5	ENTR		V06 N21 should still be in V, N windows.
	6	Record PIPA counts		Final values.
		X Axis PIPA _ _ _ _ _ _		Far left space is for sign.
		Y Axis PIPA _ _ _ _ _ _		
		Z Axis PIPA _ _ _ _ _ _		

STA/T	STEP	PROCEDURE	PANEL	REMARKS
CMP, CDR	7	Measure P BIAS X(Y,Z) $= (N_F - N_I)/100$	2,140	
		X PIP FINAL _ _ _ _ _ _ INITIAL _ _ _ _ _ _ BIAS _ _ _ _ _ _	1	Far left space is for sign.
		Y PIP FINAL _ _ _ _ _ _ INITIAL _ _ _ _ _ _ BIAS _ _ _ _ _ _		
		Z PIP FINAL _ _ _ _ _ _ INITIAL _ _ _ _ _ _ BIAS _ _ _ _ _ _		
CMP	8	Check present PBIAS X(Y, Z) Key V06 N01E 1716E PBIAS X R1 ._ _ _ _ _ _ Key ENTR 1720E PBIAS Y R1 ._ _ _ _ _ _ Key ENTR 1722E PBIAS Z R1 ._ _ _ _ _ _	2,140	

STA/T	STEP	PROCEDURE	PANEL	REMARKS
CMP	9	If measured and present BIAS terms differ by more than 0.26400, adjust PIPA bias (step 10)	2,140	
	10	Key V21 N01E 17XXE (applicable PIPA) +XXXXXE (measured value)		
	11	Key V37E 00E DSKY - P00		
	4.10.1.14	<u>Torque Gyros Extended Verb (42)</u>		Fine aligns stable member by torquing gyros. (Primarily for ground use.)
		CMC - on (required), para 4.10.1.2 ISS - on and orientation known (required), para 4.10.1.2 & 4.11		
	1	For Load <100 deg Key V42E		
		Poss OPR ERR		If another extended verb active.
	or	For Load >99.999 deg Key V21E N02E 02500E XXXXXE N15E XXXXXEE YYYYYEE ZZZZZEE ZZZZZE Key V42E		Load >90 deg should not be performed during flight.
		Poss OPR ERR		If another extended verb active.

STA/T	STEP	PROCEDURE	PANEL	REMARKS
CMP	2	FL V21 N93 (request load) Δ Gyro X, Y, Z XX.XXX DEG	2,140	
		Accept Load desired data DSKY displays V42 NO ATT lt - off		
		Reject PRO DSKY displays V42 NO ATT lt - off		Key PRO if gyro torquing registers loaded prior to keying V42E.
	4.10.1.15	<u>Load FDAI Error Needles Extended Verb (43)</u>		Loads crew specified angles into FDAI error needles. (Primarily for ground use).
		CMC - on (required), para 4.10.1.2 ISS - on and orientation known (required), para 4.10.1.2 & 4.11		
	1	Key V37E 00E DSKY P00		V43E can be executed only from P00.
	2	Key V34E		
		Poss OPR ERR		V34E cannot be executed if: CMC not in P00, IMU in coarse align or zero ICDU mode, or if another extended verb active. (Latter is constraint after liftoff.)
	3	FL V21 N22 (request load) R, P, Y XXX.XX DEG		
		Load desired error angles		Maximum angle which may be loaded is ±16.88 deg.

STA/T	STEP	PROCEDURE	PANEL	REMARKS
		4.10.1.16 <u>Initialize Erasable Dump Via Downlink Extended Verb (74)</u>		Dumps all eight banks of erasable memory via downlink.
		CMC - on (required), para 4.10.1.2		
CMP	1	Key V74E	2,140	
		Poss OPR ERR		If another extended verb active.
	2	Key V21 N01E (load) 1132E (location) XX000E (XX = 20 for 4 dumps) (XX = 10 for 2 dumps) (XX = 04 for 1 dump)		Step may be performed prior to or after step 1.
		4.10.1.17 <u>CSM/LGC Clock Sync Routine (R33)</u>		Provides onboard method of determining difference between LGC and CMC clock time (ΔT).
		CMC - on (required), para 4.10.1.2		
	1	Key V06 N65E		If precise LGC/CMC clock ΔT supplied by ground, perform Increment CMC Time Extended Verb, V55E (para 4.10.1.5)
	2	Confirm selection of this routine in LM		
	3	Perform countdown with LM crew ENTR (simultaneously with LM)		
	4	FL V06 N65 CMC clock time 00XXX. HRS 000XX. MIN 0XX.XX SEC		

STA/T	STEP	PROCEDURE	PANEL	REMARKS
CMP		Record this time	2,140	
		Obtain from LM the LM clock time of ENTR		
		Compute ΔT		
		If more data required, return to step 3		
		Compute average of ΔT's		
	5	To incorporate ΔT into CMC clock		
		Key V55E		
		ΔT 00XXX. HRS 000XX. MIN 0XX.XX SEC		All registers initially blank.
		Accept Load ΔT Reject PRO		CMC adds ΔT to CMC clock time
		or Key V34E		
	4.10.2	SCS GENERAL		
	4.10.2.1	<u>SCS Power Down</u>		Describes safe power-down configuration.
	1	Provide Safe System Configuration		
CDR		EMS FUNC - OFF	1	
		EMS MODE - STBY		
		AUTO RCS SEL (16) - OFF		
		BMAG MODE (3) - RATE 2		
		SPS THRUST - NORMAL		Normal position selected to prevent inadvertent SPS firing.
	2	Remove SCS Power		
		SCS TVC SERVO PWR (both) - OFF	7	
		FDAI/GPI PWR - OFF		

STA/T	STEP	PROCEDURE	PANEL	REMARKS
CDR		LOGIC 2/3 PWR - OFF	7	
		SCS ELEC PWR - OFF		
		SCS SIG CONDR/DR BIAS (both) - OFF		
		BMAG PWR (both) - WARMUP		
		RHC PWR NORM (both) - OFF	1	
		xxxxxxxxxxxxxxxxxxxxxxxx x x For total power down BMAG 1 PWR - OFF x x xxxxxxxxxxxxxxxxxxxxxxxx		When BMAG switches set to OFF, 40-minute warmup may be required (BMAG 1 and 2 TEMP lights extinguish when operating temperature is reached) before normal operation of BMAGs. If set from ON to WARMUP, BMAG TEMP lights should remain out.
	3	Power Down ORDEAL		
		FDAI sw (both) - INRTL	13	INRTL position bypasses ORDEAL resolver.
		EARTH/LUNAR - PWR OFF		
		LTG - OFF		
	4	Power Down COAS		
LMP		COAS PWR (2) - OFF	15,16	
CDR, CMP	5	Miscellaneous		
		THC - neutral, LOCKED		
		RHC (both) - LOCKED		
	6	Remove Logic Switching Power		An optional step to place panel 1 switches on logic buses in their OFF position. Relationship between switch positions and logic buses described in para 4.8.4.
CDR		FDAI SCALE - 5/1	1	
		FDAI SEL - 1 or 2		
		ATT SET - IMU		
		MAN ATT (3) - RATE CMD		
		LIM CYCLE - on (up)		
		ATT DBD - MAX		

STA/T STEP	PROCEDURE	PANEL	REMARKS
CDR	RATE - LOW	1	
	EMS ROLL - OFF		
	.05 G sw - OFF		
	TVC GMBL DR (2) - 1		
	4.10.2.2 <u>SCS Power Up</u>		Used to power up display and control electronics of SCS.
	1 Provide Safe System Configuration		
	AUTO RCS SEL (16) - OFF		
	BMAG MODE (3) - RATE 2		Cages BMAG's and prevents attitude error signal, if any, from causing jet firings when RCS enabled.
	2 Set Power Switches		
	FDAI/GPI PWR - BOTH	7	Provides power for display electronics.
	LOGIC 2/3 PWR - on (up)		Configures G&C for future command/control functions.
	SCS ELEC PWR - GDC/ECA		Provides power for control and GDC electronics.
	SCS SIG CONDR/DR BIAS (both) - AC1 or AC2		Required for RCS jet on-off and MTVC TLM.
	BMAG PWR (both) - ON		Provides rate and attitude source for control and display functions.
	RHC PWR NORM (both) - AC/DC	1	Provides power to RHC for manual control functions if needed.
	4.10.2.3 <u>Drift Rate Adjust</u>		Permits periodic adjustment of finite drift rates of less than 1 degree/sec. It is intended for use during long periods of drift such as in thermal control where high power consumption is undesirable.
	1 Set Up Power Switches		
	FDAI/GPI PWR - 1	7	Provides power for display electronics.
	LOGIC 2/3 PWR - on (up)		Powers panel 1 controls for command/control functions.
	SCS ELEC PWR - ECA		Powers control electronics.
	BMAG 2 PWR - ON		Provides rate source for control and display functions.

STA/T STEP	PROCEDURE	PANEL	REMARKS
CDR	SCS SIG CONDR/DR BIAS (both) - AC1 or AC2	7	Required for RCS jet on-off TLM.
	RHC PWR NORM (both) - AC/DC	1	
2	Establish Rate Display for Ball 1, para 4.9.2.1 FDAI SEL - 1 BMAG MODE - RATE 2 .05 G sw - OFF		
3	Establish SCS Minimum Impulse, para 4.9.1.2 MAN ATT (3) - MIN IMP SC CONT - SCS AUTO RCS SEL - MNA or MNB		Single jet control in each axis is preferred to allow fuel conservation.
4	Adjust Vehicle Rates RHC - ARMED Adjust rates using FDAI 1 RHC - LOCKED		FDAI SCALE - 5/1 is recommended since expected rates will be <1°/sec.
4.10.2.4	Minimum Power SCS Attitude Hold (Three or Two Axes)		Provides attitude hold in two or three axes, as desired, for prolonged periods using low power consumption.
1	Set Power Switches FDAI/GPI PWR - 1	7	
	LOGIC 2/3 PWR - on (up)		
	SCS ELEC PWR - ECA		If total attitude display is desired, select GDC/ECA.
	SCS SIG CONDR/DR BIAS (both) - AC1 or AC2		Required for RCS jet on-off TLM.
	BMAG PWR (both) - ON		

STA/T	STEP	PROCEDURE	PANEL	REMARKS
	2	Establish SCS Att Hold/Rate Command, para 4.9.1.4		
CDR		MAN ATT (3 or 2) - RATE CMD	1	Selection by axis using these switches will determine the axes in which attitude hold is enabled.
		LIM CYCLE - on (up) ATT DBD - MAX RATE - LOW SC CONT - SCS BMAG MODE (3) - RATE 2		
		AUTO RCS SEL - MNA or MNB		Single jet control in each axis is preferred to allow fuel conservation.
		BMAG MODE (3) - ATT 1 RATE 2		
	3	Select Displays, para 4.9.2.1 & 2 FDAI SEL - 1 FDAI SOURCE - GDC .05 G sw - OFF		
	4	Monitor FDAI 1 att error during limit cycling		
	4.10.2.5	<u>SCS Attitude Maneuver</u>		Provides options for performing an SCS attitude maneuver during normal orbital operations or to satisfy specific mission requirements. It permits easy correlation to the G&C Reference Modes, para 4.9, and other G&C General Procedures, para 4.10.
	1	The following are required ISS - on and orientation known, for step 3a, para 4.10.1.2 & 4.11 SCS - on, para 4.10.2.2 CMC ATT - IMU .05 G sw - OFF		

STA/T	STEP	PROCEDURE	PANEL	REMARKS
CDR	2	Obtain maneuver data from MSFN	1	
		a. Final maneuver angles R___°, P___°, Y___°		
	or	b. External reference cues		
	3	Maneuver		Select FDAI display as required.
		a. To specified maneuver angles If ISS available Perform GDC alignment to IMU gimbal angles, para 4.10.2.6 If ISS not available Perform alternate SC Inertial Attitude Determination, para 4.11.5 Set ATT SET tw - to desired values (step 2) Select attitude control mode, para 4.2.1		The mode should be compatible with the magnitude of the maneuver - e.g. rate command, accel command or minimum impulse and the desired rates.
		RHC - maneuver		Use total attitude and/or attitude error displays as required to obtain final gimbal angles.
	or	b. To external reference RHC - maneuver		Null rates at desired orientation.

STA/T	STEP	PROCEDURE	PANEL	REMARKS
	4.10.2.6	GDC Alignment to IMU Gimbal Angles		Provides two methods for aligning the GDC to the IMU.
	1	The following are required CMC - on for step 3b, para 4.10.1.2 ISS - on and orientation known para 4.10.1.2 & 4.11 SCS - on, para 4.10.2.2		
CDR		CMC ATT - IMU	1	
		.05 G sw - OFF		
		FDAI 1 sw - INRTL (desired)	13	Provides easy comparison between the FDAI and the ATT SET values.
	2	Establish Attitude Control, para 4.9.1 Damp vehicle rates		Selected to prevent drift error during the alignment process.
	3	Perform Attitude Error Display - ISS Attitude Set Source, para 4.9.2.4		Constraint: If CMC is on, an overload in the IMU resolver circuitry may cause an ICDU oscillation and trigger the ISS warning light. (Reference ICD MH01-01325-216). The FDAI must be used only as a null meter in this mode of operation. If not, large errors will result because of impedance mismatch.
		a. FDAI SOURCE - ATT SET ATT SET - IMU FDAI SEL - 1 ATT SET tw - Null FDAI 1 errors	1	
CMP	or	b. V16 N20E	2,140	
CDR		ATT SET tw - Adjust to IMU gimbal angles on DSKY	1	
	or	c. ATT SET tw - Adjust to IMU gimbal angles as indicated on FDAI		

STA/T	STEP	PROCEDURE	PANEL	REMARKS
	4	Align GDC, para 4.9.3		
CDR		ATT SET - GDC	1	
		GDC ALIGN pb - push, hold		
	4.10.2.7	<u>Attitude Reference System Comparison</u>		
	1	The following are required ISS - on and orientation known para 4.10.1.2 & 4.11 CMC - on, para 4.10.1.2 SCS - on, para 4.10.2.2 CMC ATT - IMU .05 G sw - OFF		
CMP	2	Key V37E 00E DSKY - P00	2,140	
	3	Establish Attitude Control, para 4.9.1 Damp vehicle rates		
	4	Key V06 N20E (ICDU angles) R, P, Y XXX.XX DEG		Required to allow rough ATT SET adjustment to IMU gimbal angles prior to nulling operation.
	5	Perform ATT SET/IMU comparison, para 4.9.2.4		
CDR		FDAI SEL - 1 FDAI SOURCE - ATT SET ATT SET - IMU	1	Constraint: If CMC is on, an overload in the IMU resolver circuitry may cause an ICDU oscillation and trigger the ISS warning light. (Reference ICD MH01-01325-216). The FDAI must be used only as a null meter in this mode of operation. If not, large errors will result because of impedance mismatch.

STA/T	STEP	PROCEDURE	PANEL	REMARKS
CDR		ATT SET tw (3) - Set approx to DSKY values, null FDAI 1 att errors	1	
CMP		ENTR (when nulled)	2,140	
		Record DSKY values R___°, P___°, Y___°		Error needle bias, if any, is determined and may be subtracted from GDC drift in step 6 (postflight).
		Record ATT SET values R___°, P___°, Y___°	1	
	6	Perform ATT SET/GDC comparison		
CDR		ATT SET - GDC		
		ATT SET tw (3) - null FDAI 1 att errors		
CMP		ENTR (when nulled)	2,140	
		Record DSKY values R___°, P___°, Y___°		
		Record ATT SET values R___°, P___°, Y___°	1	
	7	Key V37E 00E	2,140	
		DSKY - P00		
	4.10.2.8	<u>ORDEAL Initialization</u>		Aligns one or both FDAI's to local vertical coordinates.
		The following are required		
		CMC - on (for 3a & 6a), para 4.10.1.2		
		ISS - on and aligned, nominal option (for 6a), para 4.10.1.2 & 4.11		The IMU and/or the SCS attitude reference system must be aligned with the +Y axis of the reference along ($\underline{V}$ x $\underline{R}$), where V is the velocity vector and R is the position vector from center of the earth.
		SCS - on, para 4.10.2.2		
CDR		CMC ATT - IMU	1	
		.05 G sw - OFF		
	1	Select Total Attitude Display, para 4.9.2.5		

STA/T	STEP	PROCEDURE	PANEL	REMARKS
CDR	2	Set ORDEAL controls, para 4.9.2.6 FDAI 2 or 1 sw - ORB RATE EARTH/LUNAR - EARTH MODE - HOLD/FAST	13	Either or both FDAI's may be driven by ORDEAL.
	3	Obtain altitude setting		
		a. Orbit parameter display routine (R30)		
CMP		Key V82E Record Ha and Hp Calculate average	2,140	
	or	b. Ground track determination program (P21) Key V37E 21E Record alt for 10-min intervals of present orbit Calculate average		
	or	c. MSFN If CMC in STBY, obtain alt setting from MSFN		
CDR	4	ALT SET - adjust to proper alt	13	
	5	Damp Vehicle Rates, para 4.9.1		
	6	Obtain θ - pitch angle to lcl horiz		θ is the angle between +XSC and local horizontal plane. Positive indicates +XSC above plane.
		a. Rendezvous Parameter Display Routine (R31) Key V83E		

STA/T STEP	PROCEDURE	PANEL	REMARKS
CDR or	b. MSFN If CMC in STBY, obtain θ from MSFN based on +XSC pointed at horiz Maneuver to point +XSC at horiz, para 4.10.2.5		θ is dependent on present altitude.
7	Slew FDAI to angle indicated by following relationship of velocity vector and +XSC in quadrants shown 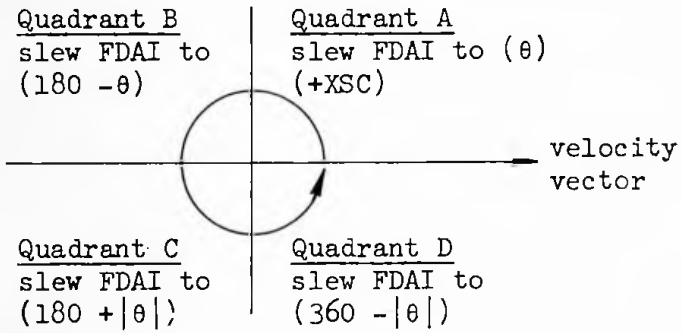 		The CMC display of θ is from -90° to +90°.
8	MODE - OPR/SLOW Slew/adjust FDAI precisely	13	The FDAI may be more accurately adjusted using the 1° marks, if the yaw angle is 0° and the roll angle 0° or 180°. When the momentary SLEW switch is released, ORDEAL is in the operate mode.
9	Repeat steps 6 through 8 as required		FDAI sw (both) must be at INRTL (pwr OFF or not) to display pitch inertial attitude.

NORMAL/BACKUP

STA/T	STEP	PROCEDURE	PANEL	REMARKS
		4.11 ALIGNMENTS		
		4.11.1 IMU ORIENTATION DETERMINATION (P51)		Determines inertial orientation of the IMU.
		CMC - on (required), para 4.10.1.2		
		ISS - on (required), para 4.10.1.2		
		SCS - on (desired), para 4.10.2.2		Provides total attitude monitoring and attitude control capability.
CDR		CMC ATT - IMU	1	
		LOGIC 2/3 PWR - on (up)	7	Required for control and display functions, if SCS-on option not selected.
	1	Optics Power Up, para 4.10.1.4		
CMP		G/N OPT PWR - on (up)	100	
LMP		G/N PWR - AC1 or AC2	5	Provides power to reticle and condition lamps (LEB).
CMP		OPT MODE - MAN	122	
		OPT ZERO - ZERO (15 sec)		
	2	Select Total Attitude Display, para 4.9.2.5		Both ISS and GDC attitude displays are recommended for monitoring of IMU coarse align and SC motion.
	3	Key V37E 51E	2,140	
		DSKY - P51		
		Poss FL V05 N09		Display will occur only if ISS is not on.
		00210 (ISS not on)		
		Perform ISS turn on		Selects P05. Return to P51 at completion of P05.
		PRO		

STA/T	STEP	PROCEDURE	PANEL	REMARKS
CMP	4	FL V50 N25 00015 (target acquisition)	2,140	Targets (celestial bodies).
		a. Select desired attitude control mode, para 4.9.1 Maneuver to acquire targets, if necessary PRO		V16 N20 may be keyed in to monitor for impending gimbal lock if operating from LEB where no FDAI is available.
	or	b. To coarse align IMU to SC axes ENTR (when att acceptable) V41 N22 (coarse align) R, P, Y 000.00 DEG NO ATT lt - on, then off Recycle step 4 (Sighting Mark Routine, R53)		Time and RCS fuel may be saved and subsequent IMU alignment decisions greatly simplified if IMU is left inertially stabilized as close as possible to orientation required for future CMC programs.
	5	FL V51 (please mark) Center target in SXT MARK (on target)	122	
	6	FL V50 N25 00016 (terminate marks) Accept PRO Reject MARK REJ pb - push Return to step 5	2,140	An unsatisfactory mark may be rejected by pressing the MARK REJ pb anytime prior to terminating the marking sequence. Possible program alarms if marks are rejected without prior marks or if surplus marks are made.
	7	FL V01 N71 Target code 000XX Accept PRO		Target codes: 00 - Planet (any planet except Earth) 01 to 45 - Star

STA/T	STEP	PROCEDURE	PANEL	REMARKS
CMP		Reject Key V21E Load target code	2,140	46 - Sun 47 - Earth 50 - Moon
		If target code is other than 00 Return to step 5 for target No. 2		
	8	FL V06 N88 (planet only) X, Y, Z PL .XXXXX		This flash will occur only if marks were made on a planet. X, Y, Z PL - Components of planet unit position vector at present time.
		Accept PRO Reject Key V25E Load desired data		Use on-board tables to determine planet position vector at present time.
		Return to step 5 for target No. 2		
		(Sighting Data Display Routine, R54)		Tests accuracy of pair of celestial body sightings.
	9	FL V06 N05 Sighting angle diff XXX.XX DEG		
		Accept PRO Reject Key V32E Return to step 4		CMC calculates and stores IMU orientation as REFSMMAT.
	10	FL V37E		R00
	11	Optics Power Down, para 4.10.1.4 OPT ZERO - ZERO G/N OPT PWR - OFF	 122 100	If P52 selected, this step should be bypassed.
LMP		G/N PWR - OFF	5	

STA/T	STEP	PROCEDURE	PANEL	REMARKS
	4.11.2	IMU REALIGN (P52)		Aligns IMU from known orientation to one of four orientations selected by crew. Orientation options available are: • Preferred • Nominal • REFSMMAT • Landing site
		CMC - on (required), para 4.10.1.2 ISS - on and orientation known (required), para 4.10.1.2 & 4.11 SCS - on (desired), para 4.10.2.2		Provides total attitude monitoring and attitude control cabability.
CDR		CMC ATT - IMU LOGIC 2/3 - on (up)	1 7	Required for control and display functions, if SCS-on option not selected.
	1	Optics Power Up, para 4.10.1.4		
CMP		G/N OPT PWR - on (up)	100	
LMP		G/N PWR - AC1 or AC2	5	Provides power to reticle and condition lamps (LEB).
CMP		OPT MODE - MAN OPT ZERO - ZERO (15 sec)	122	
	2	Select Total Attitude Display, para 4.9.2.5		Both ISS and GDC attitude displays are recommended for monitoring of IMU coarse align and SC motion.
	3	Key V37E 52E DSKY - P52	2,140	
		Poss PROG alarm Key V05 N09 (to verify alarm) 00210 (ISS not on) or XXXXX (IMU orientation unknown)		

STA/T STEP	PROCEDURE	PANEL	REMARKS
CMP	FL V37 Key XXE	2,140	Perform ISS turn-on procedure and/or IMU orientation determination.
4	FL V04 N06 Option code 00001 Option 0000X Accept PRO Reject Key V22E Load desired option		Options available are: 00001 - Preferred 00002 - Nominal 00003 - REFSMMAT 00004 - Landing site
	a. If 00001 selected, go to step 7		
	Poss FL V05 N09 00215 (preferred orientation not specified) Key V32E Recycle step 4		If nominal or REFSMMAT orientation acceptable.
	or Key V37E XXE Exit P52		To select program to define preferred orientation.
or	b. If 00002 or 00004 selected, go to step 9		
5	FL V06 N34 GET align 00XXX. HRS 000XX. MIN 0XX.XX SEC Accept PRO If option 2, go to step 7 Reject Key V25E Load desired GET align		GET align - Time at which nominal or landing site orientation defined. Display initially 0, 0, 0. If this value accepted, nominal or landing site orientation will be defined for GET align automatically selected by present time.

STA/T	STEP	PROCEDURE	PANEL	REMARKS
CMP	6	FL V06 N89 Lat (+North) XX.XXX DEG Long/2 (+East) XX.XXX DEG Alt XXX.XX NM Accept PRO Reject Key V25E Load desired data	2,140	
	7	FL V06 N22 R, P, Y XXX.XX DEG Accept PRO Reject Select desired attitude control mode, para 4.9.1 Maneuver SC Key V32E or Key V37E XXE Exit P52 (Coarse Align Routine, R50)		To obtain acceptable MGA. V32E recycles to update gimbal angle display.
	8	Verify coarse align complete NO ATT lt - on, then off Monitor ball motion		If required gimbal angle changes <5 degrees, IMU will not be coarse-aligned. Once coarse alignment complete, CMC will reset preferred orientation flag. If P52 re-entered without performing a program which redefines preferred orientation, option 00001 will not be accepted.

STA/T	STEP	PROCEDURE	PANEL	REMARKS
CMP	9	FL V50 N25 00015 (target acquisition)	2,140	
		a. For CMC assistance in selection		
		Select desired attitude control mode, para 4.9.1 Maneuver SC PRO		CMC performs target selection routine.
		Poss FL V05 N09 00405 (2 targets not available)		
		Maneuver SC until suitable target acquired PRO Go to step 10		
		or Key V32E Recycle step 9		
	or	b. To bypass CMC selection ENTR		Crew manually acquires target.
	10	FL V01 N70 Target code 000XX		Target codes: 00 - Planet (any planet except Earth) 01 to 45 - Star 46 - Sun 47 - Earth 50 - Moon
		Accept OPT MODE - CMC PRO	122 2,140	
		Reject Key V21E Load desired code		
		If target not a Planet, go to step 12		

STA/T STEP	PROCEDURE	PANEL	REMARKS
CMP 11	FL V06 N88 (planet only) X, Y, Z PL .XXXXX	2,140	X, Y, Z PL - Components of planet unit position vector at present time.
	Accept PRO Reject Key V25E Load desired data		Use on-board tables to determine planet position at present time.
	(Auto Optics Positioning Routine, R52)		Points SLOS of optics at selected target.
	Poss FL V05 N09 00404 (TA >90°)		
	a. Maneuver to reduce TA PRO		
	or b. Key V21 N70E Load new target code		
	or c. Key V34E (To exit R52) FL V37 Key XXE		R00
	Poss PROG alarm Key V05 N09 (to verify alarm) 00407 (TA >50°)		
	Maneuver to reduce TA PRO		
	or Key V21 N70E Load new target code		

STA/T	STEP	PROCEDURE	PANEL	REMARKS
CMP	12	V06 N92 (desired optics angles) SA XXX.XX DEG TA XX.XXX DEG	2,140	Optics will drive to acquire selected target.
		When sighting marks are desired OPT MODE - MAN	122	Calls R53.
		(Sighting Mark Routine, R53)		
	13	FL V51 (please mark) Center target in SXT MARK (on target)	2,140 122	
	14	FL V50 N25 00016 (terminate marks)	2,140	
		Accept PRO Reject MARK REJ pb - push Return to step 13	122	
	15	FL V01 N71 Target code 000XX	2,140	Target codes: 00 - Planet (any planet except Earth) 01 to 45 - Star 46 - Sun 47 - Earth 50 - Moon
		Accept PRO Reject Key V21E Load target code		
		If target code other than 00, return to step 10 for target No. 2		
	16	FL V06 N88 (planet only) X, Y, Z PL .XXXXX		This flash will occur only if marks were made on a planet. X, Y, Z PL - Components of planet unit position vector at present time.

STA/T STEP	PROCEDURE	PANEL	REMARKS
CMP	Accept PRO Reject Key V25E Load desired data	2,140	Use on-board tables to determine planet position vector at present time.
	Return to step 10 for target No. 2		
	(Sighting Data Display Routine, R54)		Tests accuracy of pair of target sightings.
17	FL V06 N05 Sighting angle diff XXX.XX DEG Accept PRO Reject Key V32E Go to step 19		
	(Gyro Torquing Routine, R55)		Calculate and display gyro torquing angles for final (fine) alignment of inertial platform and to torque gyros.
18	FL V06 N93 (Δ gyro angles) X, Y, Z XX.XXX DEG		X, Y, Z Gyro - Angle through which each gyro must be torqued to complete fine alignment.
	Accept PRO (gyros torqued) Reject Key V32E		Pulse IRIGS through desired angle. Do not torque gyros.
19	FL V50 N25 00014 (fine align check)		
	Accept PRO Return to step 10 Reject ENTR		To repeat target sightings (R52 & R53), sighting data test (R54), and gyro torquing (R55) to verify accuracy of alignment.

STA/T	STEP	PROCEDURE	PANEL	REMARKS
CMP	20	FL V37	2,140	ROO
	21	Optics Power Down, para 4.10.1.4		
		OPT ZERO - ZERO	122	
		G/N OPT PWR - OFF	100	
LMP		G/N PWR - OFF	5	
	4.11.3	ALTERNATE LOS IMU ORIENTATION DETERMINATION (P53)		Determines inertial orientation of IMU using backup optical device (COAS). May also be used with failed optics or mark pb.
		CMC - on (required), para 4.10.1.2		
		ISS - on (required), para 4.10.1.2		
		SCS - on (required), para 4.10.2.2		Provides total attitude monitoring and attitude control capability.
CDR		CMC ATT - IMU	1	
		COAS - calibrated (required), para 4.11.7		
	1	Select Total Attitude Display, para 4.9.2.5		Both ISS and GDC attitude displays recommended for monitoring of IMU course align and SC motion.
CMP	2	Key V37E 53E	2,140	
		DSKY P53		
		Poss FL V05 N09		Display will occur only if ISS not on.
		00210 (ISS not on)		
		Perform ISS turn on		
		PRO		
	3	FL V50 N25		
		00015 (target acquisition)		
		a. Select desired attitude control mode, para 4.9.1		
		Maneuver to acquire targets, if necessary		V16 N20 may be keyed in to monitor for impending gimbal lock if operating from LEB where no FDAI is available.
		PRO		

STA/T	STEP	PROCEDURE	PANEL	REMARKS
	or	b. To coarse align IMU to SC axes		Time and RCS fuel may be saved and subsequent IMU alignment decisions greatly simplified if IMU is left inertially stabilized as close as possible to the orientation required for future CMC programs.
CMP		ENTR (when att acceptable)	2,140	
		V41 N22 (coarse align)		
		R, P, Y 000.00 DEG		
		No ATT lt - on, then off		
		Recycle step 3		
		(Alternate LOS Sighting Mark Routine, R56)		
	4	FL V06 N92		
		SA XXX.XX DEG		
		TA XX.XXX DEG		
		Accept PRO		
		Reject Key V24E		Nominal SA and TA for COAS sightings are:
		Load desired SA & TA		SA - 000.00 DEG TA - 57.470 DEG
	5	FL V53 (please mark)		
		RHC - center target in COAS reticle		SCS minimum impulse mode is recommended.
		ENTR		CMC interprets ENTR as a mark.
	6	FL V50 N25		
		00016 (terminate marks)		
		Accept PRO		
		Reject ENTR		CMC interprets ENTR as a mark reject.
		Return to step 5		
	7	FL V01 N71		Celestial body code:
		Target code 000XX		00 - Planet (any planet except Earth) 01 to 45 - Star 46 - Sun 47 - Earth 50 - Moon
		Accept PRO		
		Reject Key V21E		
		Load target code		

STA/T	STEP	PROCEDURE	PANEL	REMARKS
		If target code is other than 00 Return to step 4 for target No. 2		
CMP	8	FL V06 N88 (planet only) X, Y, Z PL .XXXXX	2,140	This flash will occur if marks were made on a planet. X, Y, Z PL - Components of planet unit position vector at present time.
		Accept PRO Reject Key V25E Load desired data		Use on-board tables to determine planet position vector at present time.
		Return to step 4 for target 2		
		(Sighting Data Display Routine, R54)		Tests accuracy of pair of target (celestial body) sightings.
	9	FL V06 N05 Sighting angle diff XXX.XX DEG		
		Accept PRO Reject Key V32E Return to step 3		CMC calculates and stores IMU orientation as REFSMMAT.
	10	FL V37		ROO
	4.11.4	ALTERNATE LOS IMU REALIGN (P54)		Aligns IMU from a known orientation to one of four orientations selected by crew using sightings on two targets (celestial bodies) with COAS. Orientation options available are: • Preferred • Nominal • REFSMMAT • Landing site
		CMC - on (required), para 4.10.1.2 ISS - on and orientation known (required), para 4.10.1.2 & 4.11		

STA/T	STEP	PROCEDURE	PANEL	REMARKS
		SCS - on (required), para 4.10.2.2		Provides total attitude monitoring and attitude control capability. Minimum impulse control using RHC available for alignment of target for sighting marks.
CDR		CMC ATT - IMU	1	
	1	Select Total Attitude Display, para 4.9.2.5		Both ISS and GDC attitude displays recommended for monitoring IMU coarse align and SC motion.
	2	Select desired Attitude Control Mode, para 4.9.1		
CMP	3	Key V37E 54E DSKY P54	2,140	
		Poss PROG alarm Key V05 N09 (to verify alarm) 00210 (ISS not on) or XXXXX (IMU orientation unknown)		
		FL V37 Key XXE		Perform ISS turn-on procedure and/or IMU orientation determination.
	4	FL V04 N06 Option code 00001 Option 0000X		Options available are: 00001 - Preferred 00002 - Nominal 00003 - REFSMMAT 00004 - Landing site

STA/T STEP	PROCEDURE	PANEL	REMARKS
CMP	Accept PRO Reject Key V22E Load desired option	2,140	
	a. If 00001 selected, go to step 7		
	Poss FL V05 N09 00215 (Preferred orientation not specified) Key V32E Recycle step 4		If nominal or REFSMMAT orientation acceptable.
	or Key V37E XXE Exit P54		To select program to define preferred orientation.
or	b. If 00002 or 00004 selected, go to step 5		
or	c. If 00003 selected, go to step 9		
	5 FL V06 N34 GET align 00XXX. HRS 000XX. MIN 0XX.XX SEC		GET align - Time at which nominal or landing site orientation defined. Display initially 0, 0, 0. If this value accepted, nominal or landing site orientation will be defined for GET align automatically selected by present time.
	Accept PRO If option 2, go to step 7 Reject Key V25E Load desired GET align		

STA/T	STEP	PROCEDURE	PANEL	REMARKS
CMP	6	FL V06 N89 Lat (+North) XX.XXX DEG Long/2 (+East) XX.XXX DEG Alt XXX.XX NM Accept PRO Reject Key V25E Load desired data	2,140	
	7	FL V06 N22 R, P, Y XXX.XX DEG Accept PRO Reject Select desired attitude control mode, para 4.9.1 Maneuver SC Key V32E or Key V37E XXE Exit P54 (Coarse Align Routine, R50)		To obtain an acceptable MGA. V32E recycles to update gimbal angle display.
	8	Verify coarse align complete NO ATT lt - on, then off Monitor ball motion		If required gimbal angle changes <5 degrees, IMU will not be coarse-aligned. Once coarse alignment complete, CMC will reset preferred orientation flag. If P54 re-entered without performing a program which redefines preferred orientation, option 00001 will not be accepted.

STA/T STEP	PROCEDURE	PANEL	REMARKS
CMP 9	FL V50 N25 00015 (target acquisition)	2,140	
	a. For CMC assistance in selection		
	Select desired attitude control mode, para 4.9.1 Maneuver SC PRO		CMC performs target selection routine.
	Poss FL V05 N09 00405 (2 targets not available) Maneuver SC until suitable target acquired PRO Go to step 10		
	or Key V32E Recycle step 9		
	or b. To bypass CMC selection		Crew manually acquires target.
	ENTR		
10	FL V01 N70 Target code 000XX		Target codes: 00 - Planet (any planet except earth) 01 to 45 - Star 46 - Sun 47 - Earth 50 - Moon
	Accept PRO Reject Key V21E Load desired code		
	If target is not a planet, go to step 12		

STA/T	STEP	PROCEDURE	PANEL	REMARKS
CMP	11	FL V06 N88 (planet only) X, Y, Z PL .XXXXX	2,140	X, Y, Z PL - Components of planet unit position vector at present time.
		Accept PRO Reject Key V25E Load desired data		Use on-board tables to determine planet position at present time.
		(Alternate LOS Sighting Mark Routine, R56)		To perform sighting marks using COAS.
	12	FL V06 N92 SA XXX.XX DEG TA XX.XXX DEG		
		Accept PRO Reject Key V24E Load desired SA & TA		Nominal SA & TA for COAS sightings are: SA - 000.00 DEG TA - 57.470 DEG
	13	FL V53 (please mark) RHC - center target in COAS reticle ENTR		SCS minimum impulse mode recommended. CMC interprets ENTR as a mark.
	14	FL V50 N25 00016 (terminate marks)		
		Accept PRO Reject ENTR Return to step 13		CMC interprets ENTR as a mark reject.
	15	FL V01 N71 Target code 000XX		Target codes: 00 - Planet (any planet except Earth) 01 to 45 - Star

STA/T STEP	PROCEDURE	PANEL	REMARKS
CMP	Accept PRO Reject Key V32E Load target code	2,140	46 - Sun 47 - Earth 50 - Moon
	If target code is other than 00 Return to step 10 for target No. 2		
16	FL V06 N88 (Planet only) X, Y, Z PL .XXXXX		Flash will occur only if marks were made on a planet. X, Y, Z PL - Components of planet unit position vector at present time.
	Accept PRO Reject Key V25E Load desired data		Use on-board tables to determine planet position vector at present time.
	Return to step 10 for target No. 2		
	(Sighting Data Display Routine, R54)		Tests accuracy of pair of target sightings.
17	FL V06 N05 Sighting angle diff XXX.XX DEG		
	Accept PRO Reject Key V32E Go to step 19		
	(Gyro Torquing Routine, R55)		To calculate and display gyro torquing angles for final (fine) alignment of inertial platform and to torque gyros.
18	FL V06 N93 (Δ gyro angles) X, Y, Z XX.XXX DEG		X, Y, Z Gyro - Angle through which each gyro must be torqued to complete fine alignment.
	Accept PRO Reject Key V32E		Pulse IRIGS through desired angle. Do not torque gyros.

STA/T	STEP	PROCEDURE	PANEL	REMARKS
CMP	19	FL V50 N25 00014 (perform fine alignment)	2,140	
		Accept PRO Return to step 10		To repeat target sightings R56, sighting data test (R54), and gyro torquing (R55) to verify accuracy of alignment.
		Reject ENTR		
	20	FL V37		
		4.11.5 ALTERNATE SC INERTIAL ATTITUDE DETERMINATION AND GDA ALIGNMENT		
		The following are required SCS - on (required), para 4.10.2.2		
CDR		CMC ATT - IMU .05 G sw - OFF	1	
	1	Optics Power Up, para 4.10.1.4		
CMP		G/N OPT PWR - on (up)	100	
LMP		G/N PWR - AC1 or AC2	5	
CMP		OPT MODE - MAN OPT ZERO - ZERO (15 sec)	122	
	2	Select Total Attitude, Attitude Error and Rate Display for SCS, para 4.9.2		If IMU off, only FDAI 1 need be powered or selected.
	3	Select SCS Attitude Hold/Rate Command, para 4.9.1.4		Max deadband preferred until stars are obtained for fuel conservation.

STA/T	STEP	PROCEDURE	PANEL	REMARKS
CMP	4	Obtain 2 stars in SCT Select Optics Control, para 4.9.5 OHC - center star on R-line OHC - center star in FOV Hold star 1 in center of FOV Hold star 2 on R or M lines		 OHC - Optics hand control. Final adjustment required OPT COUPLING - DIRECT. ATT IMP control can be used to allow positioning of the stars on the R & M lines.
CDR	5	BMAG MODE - RATE 2 ATT DBD - MIN BMAG MODE - ATT 1 RATE 2	1	Stars must be kept aligned while BMAG's are caged.
CMP	6	Read and record angles on trun and shaft ind(s) and transmit with star data to MSFN	121	
	7	Obtain inertial att values for ATT SET tw from MSFN		
	8	Align GDC, para 4.9.3		
CDR		ATT SET tw (3) - set to MSFN values ATT SET - GDC GDC ALIGN pb - push	1	
	9	Optics Power Down, para 4.10.1.4		
CMP		OPT ZERO - ZERO	122	
		G/N OPT PWR - OFF	100	
LMP		G/N PWR - OFF	5	

NORMAL/BACKUP

STA/T	STEP	PROCEDURE	PANEL	REMARKS
	4.11.6	BACKUP GDC AND/OR IMU ALIGNMENT		The purpose of this procedure is to align GDC and/or IMU without CMC.
		The following are required SCS - on, para 4.10.2.2 CMC - off or STBY (for step 3a)		
CDR		CMC ATT - IMU .05 G sw - OFF	1	
CMP	1	Record the following data from MSFN ATT SET tw (step 9) R___°, P___°, Y___° Boresight star data (step 5) Boresight star ___ SPA___° SXP___°		SPA - Sight pitch angle. SXP - Star X position. 0° and 0° allows SC to be rolled about boresight star in step 8.
		Nav stars (step 8) Primary star ___ (50° mark on R line of SCT reticle) Secondary star ___ (R line)		
	2	ISS att set, para 4.9.2.4		
CDR		FDAI SEL - 1 FDAI SOURCE - ATT SET ATT SET - IMU		
CMP	3	Cage IMU		For GDC alignment only, this step is bypassed.
		If IMU is in standby G/N IMU PWR - on (up) (IMU automatically cages)	100	

STA/T	STEP	PROCEDURE	PANEL	REMARKS
		If IMU powered up		
CMP		a. G/N IMU PWR - OFF Wait 5 min for gyros to run down G/N IMU PWR - on (up)	100	
CDR or		b. ATT SET tw - set to 0°, 0°, 0° Maneuver SC to 0°, 0°, 0° and null FDAI 1 errors IMU CAGE - on (up) and hold until step 12	1	IMU gimbal angles should be 0±5° before caging to avoid damaging gyros.
	4	Select desired SCS attitude control mode, para 4.9.1		
	5	Maneuver SC to position boresight star in COAS		
	6	Optics Power Up, para 4.10.1.4		
CMP		G/N OPT PWR - on (up)	100	
LMP		G/N PWR - AC1 or AC2	5	
CMP		OPT MODE - MAN OPT ZERO - ZERO (15 sec)	122	
	7	Set optics shaft to 180° and trun to 7.5°, para 4.9.5		180° shaft and 7.5° trunnion places 50° mark of SCT reticle along +ZSC axis.
	8	Position stars in SCT		After positioning primary star on 50° mark, SC may be yawed about this star to place secondary star on R line.
CDR		Roll SC - maintain boresight star in COAS	5	
CMP		Null SC rate as 2 nav stars appear in SCT		

STA/T STEP	PROCEDURE	PANEL	REMARKS
CDR	MAN ATT (3) - MIN IMP ATT DBD - MIN RATE - LOW	1	±0.2° attitude deadband.
CMP	RHC - position primary star on R line (50° mark)	121	
CDR	MAN ATT ROLL & PITCH - RATE CMD (on signal from CMP)	1	Provides attitude hold in roll and pitch.
CMP	Yaw SC - position secondary star on R line	121	
CDR	MAN ATT YAW - RATE CMD (on signal from CMP)	1	Provides attitude hold in yaw.
9	GDC alignment, para 4.9.3 ATT SET tw - set to recorded values ATT SET - GDC GDC ALIGN pb - push until errors null on FDAI 1 Repeat if necessary MAN ATT (3) - MIN IMP		GDC is now aligned inertially to give display of 0°, 0°, 0° on FDAI 1 at ΔV attitude.
CMP	RHC - position stars in SCT		
CDR	GDC ALIGN pb - push		
10	Select desired SCS attitude control mode, para 4.9.1		
11	Maneuver to ΔV attitude ATT SET tw - set to 0°, 0°, 0° Maneuver SC to 0°, 0°, 0° Null errors on FDAI 1		
12	Uncage IMU IMU CAGE - on (up) and rel		This frees IMU at 0°, 0°, 0°.

STA/T	STEP	PROCEDURE	PANEL	REMARKS
		If step 3b was used		
CDR		IMU CAGE - rel	1	
	13	Optics Power Down, para 4.10.1.4		
CMP		OPT ZERO - ZERO	122	
		G/N OPT PWR - OFF	100	
LMP		G/N PWR - OFF	5	
	4.11.7	INFLIGHT COAS CALIBRATION		Provides method for inflight calibration of COAS (i.e., equivalent shaft and trunnion angles).
		The following are required		
		ISS - on and orientation known, para 4.10.1.2 & 4.11		
		CMC - on, para 4.10.1.2		
		SCS - on, para 4.10.2.2		
CDR		CMC ATT - IMU	1	
		.05 G sw - OFF		
	1	Optics Power Up, para 4.10.1.4		
CMP		G/N OPT PWR - on (up)	100	
LMP		G/N PWR - AC1 or AC2	5	Provides power to reticle and condition lamps (LEB).
CMP		OPT MODE - MAN	122	
		OPT ZERO - ZERO (15 sec)		
	2	Select Total Attitude Display, para 4.9.2.5		
	3	Key V37E 52E	2,140	
		DSKY - P52		

STA/T STEP	PROCEDURE	PANEL	REMARKS
CMP	Poss PROG alarm Key V05 N09 (to verify alarm) 00210 (ISS not on) or XXXXX (IMU orientation unknown) FL V37 Key XXE	2,140	Perform ISS turn on procedure and/or IMU orientation determination.
4	FL V04 N06 Option code 00001 Option 0000X Select REFSMMAT orientation (V22E, 3E) PRO		If preferred alignment flag is set, R2 will display 00001. Otherwise, R2 will display 00002 (nominal alignment). Options available are: 00001 - Preferred 00002 - Nominal 00003 - REFSMMAT 00004 - Landing site
5	FL V50 N25 00015 (target acquisition) Select attitude control mode, para 4.9.1 Maneuver to acquire target in COAS ENTR		Target (celestial bodies).

STA/T	STEP	PROCEDURE	PANEL	REMARKS
CMP	6	FL V01 N70	2,140	
		Target code 000XX		Target codes: 00 - Planet (any planet except Earth) 01 to 45 - Star 46 - Sun 47 - Earth 50 - Moon
		OPT MODE - CMC	122	
		Load target code of target centered in COAS (V21E XXE)		
		PRO	2,140	
		If target is not a planet, go to step 8		
	7	FL V06 N88 (planet only)		
		X, Y, Z PL .XXXXX		X, Y, Z PL - Components of planet unit position vector at present time.
		Accept PRO Reject Key V25E Load desired data		
		(Auto Optics Positioning Routine, R52)		
	8	V06 N92		Display will be updated approx every 0.5 sec.
		SA XXX.XX DEG TA XX.XXX DEG		
		When target is centered in COAS and SA and TA are relatively constant		This step was written for existing GSOP. Steps 9-10 are included to provide alternate method for obtaining equivalent shaft and trun angles.
		Key VERB (to freeze display)		
		Accept Record SA & TA for use in P53/P54 Reject KEY REL Repeat step 8		

STA/T	STEP	PROCEDURE	PANEL	REMARKS
CMP	9	Key V05 N01E 2474	2,140	Displays shaft (R1) and trun (R3) angles calculated by auto optics routine. These values will be octal.
		When target centered in COAS Key ENTR		
		Record R1 - SAC R2 - $\overline{X}\ \overline{X}\ \overline{X}\ \overline{X}\ \overline{X}$		SAC = Required optics shaft angle to have SLOS lie along target unit vector specifying direction of appropriate target.
		R3 - PAC _ _ _ _ _		PAC = Required optics trun angle to have SLOS lie along target unit vector specifying direction of appropriate target.
	10	Key V24 N87E Load SAC into R1 PAC into R2		Loads SAC and PAC into N87 cells.
	11	Key V06 N87E SA _ _ _ _ _ DEG TA _ _ _ _ _ DEG R3 $\overline{X}\ \overline{X}\ \overline{X}\ \overline{X}\ \overline{X}$		N87 will show properly scaled COAS equivalent shaft and trunnion angles. These angles should be recorded for use in N92 display of P53 and P54.
		Record SA & TA angles for use in P53/P54		
	12	Optics Power Down, para 4.10.1.4		
		OPT ZERO - ZERO	122	
		G/N OPT PWR - OFF	100	
LMP		G/N PWR - OFF	5	
	13	Select new program		

STA/T	STEP	PROCEDURE	PANEL	REMARKS
		4.11.8 INPLANE GDC ALIGNMENT		Provides a method for aligning the SCS attitude reference system in orbital plane (+Y axis of reference along V x R). This allows use of ORDEAL on FDAI 2 with IMU out of plane.
		CMC - on (required), para 4.10.1.2 ISS - on and orientation known (required), para 4.10.1.2 & 4.11 SCS - on (required), para 4.10.2.2		
CDR		CMC ATT - IMU	1	
	1	Select Total Attitude Display, para 4.9.2.5 FDAI SEL - 1/2		
CMP	2	Key V37E 52E DSKY - P52	2,140	
	3	FL V04 N06 Option code 00001 Option 0000X		Options available are: 00001 - Preferred 00002 - Nominal 00003 - REFSMMAT 00004 - Landing site
		Select nominal option Key V22E 2E		
		PRO		
	4	FL V06 N34 (GET align) GET align 00XXX. HRS 000XX. MIN 0XX.XX SEC		GET align - Time at which vehicle position and velocity vectors are selected to define IMU local vertical orientation.
		Key V25E Load present time plus 10 min		

NORMAL/BACKUP

STA/T	STEP	PROCEDURE	PANEL	REMARKS
CMP	5	Establish Attitude Control, para 4.9.1		Selected to prevent drift between gimbal angle calculation and GDC alignment.
		Damp vehicle rates		
		PRO	2,140	
	6	FL V06 N22 R, P, Y XXX.XX DEG		Gimbal angles for present SC/desired IMU.
CDR	7	ATT SET tw - adjust to Euler angles displayed on DSKY	1	
	8	Align GDC, para 4.9.3 ATT SET - GDC GDC ALIGN pb - push and hold		
	9	Select new program		
	4.11.9	ZERO ICDU EXTENDED VERB (V40 N20)		• Insures synchronization between ISS CDU counters and CDU counters in CMC.
		CMC - on (required), para 4.10.1.2 ISS - on (required), para 4.10.1.2		• Terminates IMU coarse align mode and enters fine align mode (inertial IMU).
CMP	1	Key V40 N20E NO ATT lt - OFF	2,140	
		Poss PROG alarm Exit routine Key V05 N09 (to verify alarm) 00206 (zero encode not allowed) Key V41 N20E, para 4.11.10		Alarm occurs if ISS is in coarse align mode with gimbal lock.

STA/T	STEP	PROCEDURE	PANEL	REMARKS
		4.11.10 COARSE ALIGN ICDU EXTENDED VERB (V41 N20)		• Aligns IMU to gimbal angles specified by crew. • Coarse aligns to 0, 0, 0 when in gimbal lock and coarse align.
		CMC - on (required), para 4.10.1.2 ISS - on (required), para 4.10.1.2		
CMP	1	Key V41 N20E	2,140	
		Poss OPR ERR Exit coarse align		Occurs if another extended verb active.
	2	FL V21 N22 (load CDU angles) R, P, Y XXX.XX DEG Accept Load desired angles Reject PRO DSKY V41 NO ATT lt - on		NO ATT lt will remain on even after gimbals have been driven to specified angles.
		Poss PROG alarm Key V05 N09E (to verify alarm) 00211 (error >2°) To repeat coarse align Key V41 N20E		Present and specified gimbal angles may be compared by keying V16 N20E and V16 N22E. Alternate method is to key V62E (Mode 2) to display difference between N20 and N22 on FDAI error needles.
	3	To extinguish NO ATT lt and terminate coarse align Key V40 N20E or V42E		Zero ICDU extended verb, para 4.11.9. Torque gyros extended verb, para 4.10.1.14.

STA/T	STEP	PROCEDURE	PANEL	REMARKS
	4.11.11	COARSE ALIGN OCDU EXTENDED VERB (V41 N91)		Drive optics to shaft and trunnion angles specified by crew.
		CMC - on (required), para 4.10.1.2		This procedure may not be selected during gimbal drive test or when TVC DAP on.
	1	Optics Power Up, para 4.10.1.4		
CMP		G/N OPT PWR - on (up)	100	
LMP		G/N PWR - AC1 or AC2	5	
CMP		OPT MODE - MAN	122	
		OPT ZERO - ZERO (15 sec)		
	2	OPT MODE - CMC		
	3	Key V41 N91E		
		Poss OPR ERR Exit coarse align OCDU's		Occurs if another extended verb active.
		Poss PROG alarm Key V05 N09E (to verify alarm) 00115 (OPT MODE not CMC) OPT MODE - CMC		
	or	00117 (OPT not available) Exit coarse align		This alarm code indicates that OCDU's are being used by TVC DAP or gimbal drive test and that this procedure cannot be performed.
	4	FL V21 N92 (Load OCDU's)		
		SA XXX.XX DEG		
		TA XX.XXX DEG		

STA/T	STEP	PROCEDURE	PANEL	REMARKS
CMP		Accept Load desired SA & TA	122	
		Reject PRO		
		DSKY - V41		Key V16 N91E to monitor optics angles.
	5	Optics Power Down, para 4.10.1.4		
		OPT ZERO - ZERO		
		G/N OPT PWR - OFF	100	
LMP		G/N PWR - OFF	5	

STA/T	STEP	PROCEDURE		PANEL	REMARKS
		4.12 COASTING			
		4.12.1 GROUND TRACK DETERMINATION (P21)			Provides the crew ground track data for either the CSM or LM, based on time loaded in step 3.
		CMC - on (required), para 4.10.1.2			
CMP	1	Key V37E 21E DSKY P21		2,140	
	2	FL V04 N06			
		Option code	00002		
		CMC assumed option (00001 = CSM, 00002 = LM)	0000X		
		Accept PRO Reject V22E (load desired option)			
	3	FL V06 N34			
		GET lat long	00XXX. HRS 000XX. MIN 0XX.XX SEC		GET at desired position of selected vehicle.
		Accept PRO Reject V25E (load desired T-lat long)			
	4	FL V06 N43			
		Lat (+North)	XXX.XX DEG		Selected vehicle latitude at T-lat long.
		Long (+East)	XXX.XX DEG		Selected vehicle longitude at T-lat long.
		Alt	XXXX.X NM		Selected vehicle altitude above launch pad radius at T-lat long.

STA/T	STEP	PROCEDURE	PANEL	REMARKS
CMP		Recycle V32E (to advance display by 10 min) Terminate PRO	2,140	Advances temporary state vector time tag by 10 min and updates the N43 display.
	5	FL V37		R00
	4.12.2	ORBITAL NAVIGATION (P22)		Purpose: • Locate, track and mark on a lmk suitable for navigation. • Calculate orbital parameter changes generated by lmk sightings marks. • Display orbital parameter changes generated by first lmk sighting mark for crew/ground verification prior to state vector update. • Update known lmk coordinates. • Provide unknown lmk coordinates. • Track a preloaded landing site. • Provide coordinates of a new landing site (treated as an unknown lmk). • Provide coordinates of an offset landing site. • Point optics along an advanced orbit ground track to track and map a new landing site.

COASTING

STA/T STEP	PROCEDURE	PANEL	REMARKS
			There are 25 known lunar lmk's stored in CMC fixed memory and the landing site (lmk code 01) is stored in erasable memory. LMKs may be known or unknown. Known earth lmk - Made known to CMC by Lat, Long/2 and Alt. Known lunar lmk - Made known to CMC by lmk code. Unknown lmk - Identified to CMC as unknown lmk. There are two types of landing site mapping: • Landing site determination - Track and mark an unknown lmk and store coordinates in lmk code 01. • Landing site offset - To store offset landing side coordinates in lmk code 01. Ground Track Determination Program (P21) and Lunar Landmark Selection Routine (R35) are available to aid in selection of lmks.
	CMC - on (required), para 4.10.1.2 ISS - on and orientation known (required), para 4.10.1.2 & 4.11 Optics Power Up (required), para 4.10.1.4		
CMP	OPT MODE - CMC	122	
CDR	CMC ATT - IMU	1	
	.05 G sw - OFF		
	SCS - on (required), para 4.10.2.2		Provides monitoring and alternate control capability.

COASTING

NORMAL/BACKUP

STA/T	STEP	PROCEDURE	PANEL	REMARKS
	1	Select Total Attitude Display, para 4.9.2.5		
	2	Select Attitude Control mode desired, para 4.9.1		
CMP	3	Key V37E 22E DSKY P22	2,140	
		Poss PROG alarm Key V05 N09E (to verify alarm) 00210 (ISS not on)		R02.
		or XXXXX (IMU orientation unknown)		R02.
		FL V37 Key XXE (select prog)		
	4	FL V06 N45 R3 max MGA if X-axis inplane XXX.XX DEG		MGA is maximum possible middle gimbal angle if SC X-axis is held in orbital plane.
CDR		a. IF IMU alignment satisfactory Perform ORDEAL Initialization, para 4.10.2.8 Maneuver to sighting att and establish orb rate Select FDAI display & att control mode desired, para 4.9.1 & 4.9.2		The initial sighting attitude should position optics shaft axis inplane and ≈10° ahead of local vert. This provides an optics cone of view which extends ≈50° ahead of local vert to ≈30° aft. Sighting attitude should be adjusted by a small roll maneuver, if

COASTING

STA/T STEP	PROCEDURE	PANEL	REMARKS
CDR	RHC - position Xsc axis ≈20° below Lcl horiz, SEF heads up (put COAS LOS on horiz or use ORDEAL FDAI) RHC or ATT IMP - pitch to offset orb rate, roll to avoid shaft axis ≈10° of lmk		necessary, to prevent optics shaft axis from passing within 10° of target lmk. The 10° separation of lmk LOS and shaft axis insures optics drive rates are not exceeded due to optics shaft reversal to avoid trunnion stop at -5°.
CMP	PRO (If earth orbit, go to step 6)	2,140	
	or b. If realignment desired Key V37E XXE		Select IMU realignment procedure. Reselect P22 at completion of realignment procedure.
	5 FL V05 N70 (lunar orbit only) R2 lmk code ABCDE A 1 (known lmk), 2 (unknown lmk) B Index of offset designator C Not used DE lmk ID		
	Accept If A = 2 OPT MODE - MAN PRO Go to step 8	 122 2,140	
	or If A = 1 & DE ≠ 00 PRO Go to step 7		The PROG alarm (00404 & 00407) may occur at this point.
	or If A = 1 & DE = 00 PRO		

COASTING

NORMAL/BACKUP

STA/T STEP	PROCEDURE	PANEL	REMARKS
CMP	Reject Key V22E Load desired lmk code	2,140	
6	FL V06 N89 (lmk data) Lat (+North) XX.XXX DEG Long/2 (+East) XX.XXX DEG Alt XXX.XX NM		 Lmk latitude. Lmk longitude divided by 2. Lmk altitude above Fischer ellipsoid.
	Accept PRO Reject V25E Load desired data		
	(Auto Optics Positioning Routine, R52)		Points optics SLOS to selected lmk automatically. If in lunar orbit and lmk code 5X was loaded in step 5, R52 will position optics 60° ahead of SC.
	Poss V05 N09 00404 (TA >90 DEG)		PROG alarm lt on.
	a. Maneuver SC until optics can acquire lmk PRO		 PRO recomputes required optics angles.
	or b. Key V22 N70E Load new lmk code		
	or c. Key V25 N89E Load new lmk data PRO		R52 examines lmk data each cycle.
	or d. V34E (terminates program) FL V37E		 R00

STA/T STEP	PROCEDURE	PANEL	REMARKS
CMP	Poss PROG alarm (TA >50°	2,140	
	Key V05 N09E (to verify alarm)		
	00407 (is stored)		If this alarm occurs, optics will be driven in shaft only.
	a. Maneuver to reduce desired trun angle		Key V16 N92E for display of required optics angles if not presently displayed. Key V16 N22E for required gimbal angles.
	or b. Reselect lmk Key V22 N70E (to load lmk code)		
	or c. Key V25 N89E (to load new lmk coords)		
7	V06 N92 (new OCDU angles) SA XXX.XX DEG TA XX.XXX DEG		No display if OPT MODE - MAN. If total attitude error is being displayed on error needles (V62 with RCS DAP active), nulling needles will point optics shaft axis at lmk.
	To mark, OPT MODE - MAN	122	Selects R53. To regain auto optics positioning, select OPT MODE - CMC (prior to completion of R53).
	(Sighting Mark Routine, R53)		
8	FL V51 (please mark) Center lmk in optics MARK pb - push		Known lmk - SCT, unknown lmk - SXT.

COASTING

NORMAL/BACKUP

STA/T STEP	PROCEDURE	PANEL	REMARKS
CMP	Accept Repeat mark procedure		If more marks desired.
	or PRO	2,140	If sufficent marks made.
	Reject MARK REJECT pb - push Repeat mark procedure	122	
	or After 5 marks FL V50 N25 00016 (terminate marks)	2,140	
	Accept PRO Reject MARK REJECT pb - push Repeat mark procedure OPT ZERO - ZERO (15 sec) OPT MODE - CMC Exit R53 & R52	122	Rejects last (5th) mark.
9	FL V05 N71 (lmk data) R2 - ABCDE A 1 (known lmk), 2 (unknown lmk) B Index of offset designator C Not used DE Lmk ID Accept PRO If A is 2 (or A is 1 & DE ≠ 00) Go to step 11	2,140	If a mark was made on an offset landing site, ensure that B corresponds to the mark.

STA/T	STEP	PROCEDURE	PANEL	REMARKS
CMP	10	FL V06 N89 (lmk coordinates)	2,140	If auto optics positioning was performed, this data will be identical to the N89 data loaded in step 6.
		Lat (+North) XX.XXX DEG		
		Long/2 (+East) XX.XXX DEG		
		Alt XXX.XX NM		
		Accept PRO		
		Reject V25E (load desired data)		
	11	FL V06 N49		
		ΔR XXXX.X NM		Position vector change magnitude.
		ΔV XXXX.X FPS		Velocity vector change magnitude.
		Accept PRO		
		Reject V32E		
		E.O. - return to step 6		If in earth orbit.
		or L.O. - return to step 5		If in lunar orbit.
	12	FL V06 N89		If offset landing site mark was made and identified to the CMC, display is offset landing site coordinates of the lmk on which marks were taken.
		Lat (+North) XX.XXX DEG		
		Long/2 (+East) XX.XXX DEG		
		Alt XXX.XX NM		
		Accept PRO		Stores coordinates in CMC memory as the landing site (lmk code 01).
		E.O. - return to step 6		
		or L.O. - return to step 5		
		Reject V32E		Does not store coordinates.
		E.O. - return to step 6		
		or L.O. - return to step 5		
	13	Key V34E (to terminate P22)		V34E at any flashing display terminates P22.
		FL V37E		R00.

COASTING

NORMAL/BACKUP

STA/T	STEP	PROCEDURE	PANEL	REMARKS
		4.12.3 CISLUNAR MIDCOURSE NAVIGATION (P23)		Procedure purpose is to accomplish midcourse navigation by incorporating star/earth and star/moon optical measurements.
		CMC - on (required), para 4.10.1.2 SCS - on (required), para 4.10.2.2		Provides monitoring displays and alternate control capability.
		ISS - on and orientation known (desired), para 4.10.1.2 & 4.11		Permits auto maneuver to tracking attitude and auto optics positioning, if desired. Optics should be on for 15 min prior to marking.
		RCS DAP - Load and activate (desired), para, 4.10.1.6 & 4.10.1.8 Optics powered up (required), para 4.10.1.4		Required if automatic attitude maneuver desired.
CDR		CMC ATT - IMU .05 G sw - OFF LOGIC 2/3 PWR - on (up)	1 7	
	1	Select Total Attitude Display, para 4.9.2.5		
	2	Select Attitude Control mode desired, para 4.9.1		
CMP	3	Key V37E 23E DSKY P23	2,140	
		If IMU orientation unknown RHC - maneuver to acquire lmk/horiz in SXT FOV Go to step 8		Select a suitable lmk/horiz for use by Optics Calibration Routine, R57.

STA/T	STEP	PROCEDURE	PANEL	REMARKS
		or IMU orientation known Go to step 4		
CMP	4	FL V05 N70	2,140	
		Star ID 00ODE Lmk ID ABCDE Horiz ID 00CDO		
		R1 - star ID R2 - lmk identification A always 1 (known lmk) B insignificant C 1 (earth lmk), 2 (moon lmk) DE lmk ID		
		or R2 - 00000 for horizon measurement		
		R3 - horizon identification C 1 (earth horizon), 2 (moon horizon) D 1 (near horizon), 2 (far horizon)		
		or R3 - 00000 for lmk measurement		
		Automatic acquisition desired		
		Accept Record data PRO Reject V25E (load desired data)		
		or Manual acquisition desired OPT ZERO - ZERO (15 sec)	122	
		OPT MODE - MAN PRO	2,140	

COASTING

NORMAL/BACKUP

STA/T	STEP	PROCEDURE	PANEL	REMARKS
		If sighting is on horiz or on an identified lmk (i.e. R2, DE ≠ 00); go to step 6		
CMP	5	FL V06 N89	2,140	
		Lat (+North) XX.XXX DEG		
		Long/2 (+East) XX.XXX DEG		
		Alt XXX.XX NM		Above Fischer ellipsoid (above mean lunar radius for lunar flights).
		Accept PRO		
		Reject V25E (load desired data)		
	6	FL V50 N25		
		00202 (request auto maneuver)		
		Reject ENTR		
		RHC - maneuver to acquire lmk/horiz in SXT		Select a suitable lmk/horiz for use by Optics Calibration Routine, R57.
		Go to step 8		
		Accept PRO		Calls Cislunar Tracking Attitude Routine, R64, which calculates the desired tracking attitude and subsequently calls R60 to perform the automatic maneuver. R64 may be repeated by keying VXXE.
		(Attitude Maneuver Routine, R60)		Provides for maneuver (auto or manual) to attitude calculated by R64.
	7	FL V50 N18 (CMC auto request)		
		R, P, Y XXX.XX DEG		Required gimbal angles.
CDR		Accept SC CONT - CMC	1	
		CMC MODE - AUTO		

STA/T STEP	PROCEDURE	PANEL	REMARKS
CMP	PRO	2,140	
	V06 N18 R, P, Y XXX.XX DEG Monitor auto maneuver on FDAI Recycle step 7		Static display. This display will remain until completion of auto maneuver and then revert to FL V50 N18.
Reject	V62E RHC - null FDAI error needles Recycle step 7		Provides error needle reference for manual maneuver.
CDR or	SC CONT - SCS (or CMC MODE - other than AUTO)	1	
CMP	PRO (updates display) Recycle step 7	2,140	Recomputes desired attitude without performing auto maneuver.
or	ENTR (terminates R60)		
	(Optics Calibration Routine, R57)		Measures effect of solar radiation on SXT trunnion angle and stores measured trunnion bias for use by P23.
8	FL V59 (perform calib mark)		Constraint: Optics should soak in an attitude within region that will be used for P23 for at least 30 minutes prior to calibration and marking on navigation targets.
Accept	Center moon in SXT OPT ZERO - ZERO (15 sec) OPT MODE - MAN OPT TELETRUN - SLAVE TO SXT Superimpose SLOS and LLOS MARK pb - push OPT MODE - CMC Go to step 9	122	Trunnion bias angle is a function of angle between LLOS and sun and is a constant if sun is outside cone ±15 deg from LLOS.

COASTING

NORMAL/BACKUP

STA/T STEP	PROCEDURE	PANEL	REMARKS
CMP	Reject ENTR IMU orientation unknown Go to step 11 or IMU orientation known Go to step 10	2,140	It is not necessary to recalibrate, if optics have been calibrated with sun outside cone defined above, and will be used outside cone during marks to be taken. If sun is within this cone, calibration should be performed each time through P23.
	9 FL V06 N87 R2 (trun bias) XX.XXX DEG		
	Accept PRO If IMU orientation is unknown, go to step 11		CMC stores calibration angle.
	Reject V32E Return to step 8		CMC erases mark data and recycles for new mark.
	(Automatic Optics Positioning Routine, R52)		Points SLOS of the optics at selected star.
	Poss FL V05 N09 00404 (TA >90°) Maneuver to reduce TA PRO		
	or Key V21 N70E Load new star code		
	or Key V34E (exit R52) FL V37		R00

STA/T STEP	PROCEDURE	PANEL	REMARKS
CMP	Poss PROG alarm Key V05 N09E (to verify alarm) 00407 (TA >50°) Maneuver to reduce TA PRO or Key V21 N70E Load new star code	2,140	
10	V06 N92 (desired optics angles) SA XXX.XX DEG TA XX.XXX DEG (Sighting Mark Routine, R53)		Optics will drive to acquire selected star.
11	OPT MODE - MAN	122	
12	FL V51 (please mark) Check star & lmk are in SCT FOV OPT COUPLING - RSLV OPT SPEED - LO RHC - Position lmk near center of SXT FOV OHC - Superimpose star and lmk images MARK pb - push	2,140 122	
13	FL V50 N25 00016 (terminate marks) Accept PRO Reject MARK REJECT pb - push Return to step 12	2,140 122	

COASTING

NORMAL/BACKUP

STA/T	STEP	PROCEDURE	PANEL	REMARKS
CMP	14	FL V01 N71 Target code 000XX R1 - 00000 = Planet (any planet except earth) 00001 through 00045 = star 00046 = sun 00047 = earth 00050 = moon Accept PRO Reject V21E Load desired code	2,140	
	15	FL V05 N71 Star ID 000DE Lmk ID ABCDE Horiz ID 00CD0 Accept Record data PRO Reject V25E Load desired data If sighting mark was made using horiz or an identified lmk (i.e. R2, DE ≠ 0), go to step 17		Refer to step 4 for codes.
	16	FL V06 N89 Lat XX.XXX DEG Long/2 XX.XXX DEG Alt XXX.XX NM		

COASTING

STA/T STEP	PROCEDURE	PANEL	REMARKS
CMP	Accept PRO Reject V25E Load desired data	2,140	
17	FL V06 N49 ΔR XXXX.X NM ΔV XXXX.X FPS Accept PRO Reject V32E IMU orientation unknown Return to step 8 or IMU orientation known Return to step 4		Magnitude of position vector change. Magnitude of velocity vector change.
18	FL V37		
4.12.4	ORBIT PARAMETER DISPLAY (R30) CMC - on (required), para 4.10.1.2		Provides the crew with CMC computed orbital parameters.
1	Key V82E If average G routine is on, go to step 3		
2	FL V04 N06 Option code 00002 CMC assumed option 0000X (1 = CSM, 2 = LM) Accept PRO Reject V22E (load desired option)		

COASTING

NORMAL/BACKUP

STA/T	STEP	PROCEDURE	PANEL	REMARKS
CMP	3	FL V16 N44	2,140	
		Ha XXXX.X NM		Altitude above launch pad radius.
		Hp XXXX.X NM		Altitude above launch pad radius.
		TFF XXBXX MIN SEC		Time of free fall to 49.4 NM.
		Accept PRO		
		Reject V32E		Recalculates orbital parameters. (Valid only if average G is not on.)
		Recycle step 3		
		4.12.5 LUNAR LANDMARK SELECTION (R35)		
		CMC - on (required), para 4.10.1.2		• Displays time spacecraft will pass over landing site. • Calculates and displays five lmks suitable for navigation. • Calculates and displays time the spacecraft will pass over each lmk.
	1	Key V37E 00E DSKY P00		R35 can be selected from P00 only.
	2	Key V79E		
	3	FL V06 N34		Time CMC will define as start of lmk tracking. First display will be present time.
		T lat long 00XXX. HRS 000XX. MIN 0XX.XX SEC		
		Accept PRO		
		Reject V25E (load desired T-lat long)		

COASTING

STA/T	STEP	PROCEDURE		PANEL	REMARKS
CMP	4	FL V06 N31		2,140	
		T-ldg site	00XXX. HRS 000XX. MIN 0XX.XX SEC		
		Record T-ldg site			
		PRO (To display first navigation lmk)			
		or V34E (terminates R35)			
	5	FL V05 N70			
		R2 Lmk code	000XX		
		PRO (To display time this lmk) Go to step 6			
		or V32E (To display next lmk code) Recycle step 5			
		or V34E (To terminate) Exit R35			
	6	FL V06 N34			GET when spacecraft will pass over lmk just displayed in step 5.
		T-lmk	00XXX. HRS 000XX. MIN 0XX.XX SEC		
		PRO (To display next lmk code) Return to step 5			PRO will terminate the routine if all five lmks have been displayed.
		or V34E (To terminate) Exit R35			

STA/T	STEP	PROCEDURE	PANEL	REMARKS
	4.13	ORBIT CHANGE VEHICLE PREPARATION		
	4.13.1	ORBIT CHANGE GENERAL SYSTEM MANAGEMENT		
	1	Obtain update from ground		
CMP, LMP	2	Propulsion Systems Checks, para 4.7.2.1 and 4.7.2.2		The following steps contain those system and subsystem verifications necessary to ensure operational status of the S/C prior to commencing thrust procedures.
	3	EPS DC and AC Checks, para 4.7.3.3 and 4.7.3.4		
ALL	4	Pressure Suit Circuit and PGA Check at 5.0 psia, para 4.7.4.9 (if required)		
	5	C&WS Operational Check, para 4.7.5.1		
	6	DSKY Check, para 4.10.1.10		These CMC/DSKY checks provide confidence in the CMC, Caution and Warning, DSKY operations.
	7	CMC Self-Check, para 4.10.1.11		
	8	DSKY Condition Light Test, para 4.10.1.12		

STA/T	STEP	PROCEDURE	PANEL	REMARKS
		4.13.2 EMS ORBIT CHANGE TEST		Inflight verification of X-axis accelerometer output, ΔV/range display, the SPS THRUST light, and the thrust cutoff relay in the EMS.
CDR	1	EMS ΔV Test		
		cb EMS (2) - close	8	
		EMS MODE - STBY	1	
		EMS FUNC - ΔV SET (wait 5 sec)		
		EMS MODE - AUTO		
		ΔV ind - set to 1586.8		
		EMS FUNC - ΔV TEST		
		SPS THRUST lt - on		
		ΔV ind - decr (10 sec)		
		SPS THRUST lt - off (at 0.1 fps)		
		ΔV ind - stops at -20.8±20.7		
		EMS MODE - STBY		
	2	For orbit change refer to		
		G&N ORBIT CHANGE, para 4.14,		
	or	SCS ORBIT CHANGE, para 4.15		

STA/T	STEP	PROCEDURE	PANEL	REMARKS
		4.14 G&N ORBIT CHANGE		
		4.14.1 G&N ORBIT CHANGE EXTERNAL DELTA V PRETHRUSTING (P30)		The purpose of P30 is to accept targeting parameters from sources external to CMC and compute therefrom required velocity and other initial conditions required by CMC for execution of ΔV maneuver. Targeting parameters are impulsive ΔV along CSM local vertical axes at TIG and time of ignition (TIG). P30 displays, to flight crew and ground, certain specific dependent variables associated with desired maneuver for approval by flight crew/ground.
		CMC - on (required), para 4.10.1.2 ISS - on and orientation known (desired), para 4.10.1.2 & 4.11		ISS must be on and its orientation known to obtain middle gimbal display (step 5).
CMP	1	Key V37E 30E DSKY - P30	2,140	At this point, P30 (Colossus) sets TRACK and UPDATE flags.
	2	FL V06 N33 GETI, stored OOXXX. HRS OOOXX. MIN OXX.XX SEC Accept Record GETI PRO Reject V25E, load desired GETI		
	3	FL V06 N81 (ΔV components) ΔVX, Y, Z (lcl vert at GETI) XXXX.X FPS Accept PRO Reject V25E, load desired data		Display - stored components of delta V along local vertical axes at GETI. PRO option resets UPDATE flag.

G&N ORBIT CHANGE PRETHRUSTING (P30)

NORMAL/BACKUP

STA/T	STEP	PROCEDURE		PANEL	REMARKS
CMP	4	FL V06 N42 (calculated thrust parameters)		2,140	
		Ha	XXXX.X NM		Apogee and perigee altitude is measured above launch pad radius (earth orbit) or, for apolune and perilune, altitudes are measured above lunar radius at most recently defined landing site. ΔV is the magnitude of the impulsive ΔV vector at GETI.
		Hp	XXXX.X NM		
		ΔV (required)	XXXX.X FPS		
		Coordinate parameters with GRD (if avail)			
		Accept PRO Reject Reselect P30 or P27, load new parameters			
	5	FL V16 N45			
		Mark ctrs	XXBXX VHF-Optics		Mark ctrs - Number of marks processed by R22. The two most significant digits display VHF ranging marks. The two least significant digits display optics mark counter. Optics mark counter does not distinguish between backup and primary marks.
-59:59		TF GETI	XXBXX MIN-SEC		Constraint - R2 cannot be >59 59 at this point. If TF GETI >59 59, display inaccurate
		MGA	XXX.XX DEG		MGA will be displayed as -00002 at this point if IMU not on and orientation known (REFSMMAT flag reset). Otherwise, display is MGA at GETI if +X axis of CSM is aligned with initial thrust direction.
		Accept Record values PRO Align GDC to IMU, para 4.10.2.6 Reject Select IMU Realign Program P52/P54 Key V37E XXE			External ΔV steering flag is set at this point for use by thrusting program.

G&N ORBIT CHANGE PRETHRUSTING (P30)

STA/T	STEP	PROCEDURE	PANEL	REMARKS
CMP	6	FL V37 Key XXE	2,140	R00 (Colossus) turns off average g (if on) and zeroes rendezvous mark and VHF ranging counters in CMC. It also sets or resets REND, TRACK, and UPDATE flags, depending on which programs are in progress or are called. It may recycle into P20 under certain conditions.
		Go to SCS Orbit Change, para 4.15 or G&N SPS orbit change, P40, para 4.14.2 or G&N SM RCS Orbit Change, P41, para 4.14.3		These are thrusting options available.

G&N ORBIT CHANGE PRETHRUSTING (P30)

NORMAL/BACKUP

STA/T STEP	PROCEDURE	PANEL	REMARKS
	4.14.2 G&N/SPS ORBIT CHANGE THRUSTING (P40)		The purpose of this procedure is: • To compute a preferred CSM attitude and IMU orientation for an SPS thrusting maneuver. • To calculate and display gimbal angles which would result if present IMU orientation is used for thrusting in the preferred vehicle attitude. (Crew then decides whether to thrust at present IMU orientation or to reorient the IMU using P52 or P54.) • To maneuver CSM to thrusting attitude (R60). • To control GNCS during SPS thrust countdown, ignition, thrusting, and thrust termination. • To allow trimming of residual steering errors.
	CMC - on (required), para 4.10.1.2 ISS - on with orientation known (required), para 4.10.1.2 & 4.11 SCS - on (required), para 4.10.2.4		All AUTO RCS SEL switches must be OFF prior to SCS - on. G&C circuit breakers on all panels should be closed except as defined in Limited Use Controls, para 4.8.4.
CDR	Orbit Change Vehicle Preparation (desired), para 4.13 CMC ATT - IMU .05 G sw - OFF	1	

STA/T	STEP	PROCEDURE	PANEL	REMARKS
CDR	1	Test C/W lamps EMS MODE - STBY EMS FUNC - ΔV SET SET ΔV ind EMS FUNC - ΔV RCS DAP - load and activate, including ullage selection, para 4.10.1.6 & 8	1	Since SPS trim values are used at beginning of P40 for computing preferred IMU orientation and final vehicle attitude, they should be reviewed at this time. SPS trim values will be updated during CMC-controlled burn.
CMP	2	Key V37E 00E DSKY - P00	2	P00 updates state vector. Time to GETI must be less than 45 min.
	3	Key V37E 40E DSKY - P40		This program should be preceded by a prethrust program.
		Poss PROG alarm Key V05 N09E (to verify alarm) 00210 (ISS not on) or XXXXX (IMU orientation unknown)		
		FL V37 Key XXE		When control is returned to CMC, program cycles through R00, which may set, or reset, REND, TRACK and UPDATE flags, depending on which programs are in progress or are called. At this point (after R02 exited), CMC uses initial thrust direction and engine bell trim angles, to

G&N SPS ORBIT CHANGE THRUSTING (P40)

NORMAL/BACKUP

STA/T	STEP	PROCEDURE	PANEL	REMARKS
				compute preferred IMU orientation at preferred vehicle attitude for CSM position radius vector at TIG, and sets PREFERRED ORIENTATION flag. Final attitude will be computed (VECPOINT) during R60, and will point engine bell in initial thrust direction. The 0.5-degree deadband is set in RCS DAP, the 3-AXIS flag is reset, and R60 is automatically called.
CMP	4	If VG display desired Key V06 N81E VG X, Y, Z XXXX.X FPS (lcl vert at GETI)	2	Display is available until average g turned on (GETI -30 sec).
		(R60 - Attitude Maneuver)		Maneuvers CSM to final attitude based on attitude specified and stored in P40. The maneuver is performed automatically by the G&N, or manually with an optional final automatic G&N controlled trim maneuver.
	5	FL V50 N18 (select CMC - auto) R, P, Y XXX.XX DEG		Display desired final gimbal angles.
		Establish total attitude display, para 4.9.2.5		Both FDAI's should be selected to provide redundant displays.
CDR		Accept BMAG MODE (3) - RATE 2 CMC attitude control - auto, para 4.9.1.6	1	Prevents BMAG's from hitting stops during maneuvers.
CMP		PRO	2	Initiates auto maneuver without review of final gimbal angles. If review of final gimbal angles is desired prior to auto maneuver, reject option should be selected. If desired, att set control panel can then be set to final gimbal angles in order to provide attitude error information for completion of maneuver manually in event of G&N failure.
		Reject Select desired attitude control mode, para 4.9.1 ENTR - go to step 7		

G&N SPS ORBIT CHANGE THRUSTING (P40)

STA/T	STEP	PROCEDURE	PANEL	REMARKS
	6	Auto Maneuver		
CMP		V06 N18 (final attitude) R, P, Y XXX.XX DEG	2	These angles are obtained from a VECPOINT calculation. Maneuver rate will be as last defined by DAP load.
CDR,CMP		Monitor FDAI's (If RHC used or SCS selected, go to step 7)		SC begins maneuver to final attitude when PRO keyed in step 5. CMC will monitor for RHC inputs, which will be interpreted as a manual override and will terminate auto maneuver.
CMP	7	FL V50 N18 (att trim enable) R, P, Y XXX.XX DEG		Final trim maneuver should be considered essential to SPS ΔV attitudes. Display of final gimbal angles remains in registers. Final attitude trim maneuver performed after Gimbal Drive and Trim Check.
LMP		Ignition preparation		Sets up nontime-critical switching required for thrusting.
		MN BUS TIE (2) - on (up) SPS He VLV tb (both) - bp SPS He VLV (both) - AUTO	3	Two batteries on line for orbit changes.
CDR		RHC PWR DIRECT (both) - OFF SC CONT - CMC CMC MODE - AUTO SCS TVC (2) - RATE CMD LV/SPS IND SII/SIVB - GPI TVC GMBL DRIVE (2) - AUTO FCSM SPS A - on (up)	1	
05:00		Gimbal Drive and Trim Check		PITCH and YAW GMBL caution/warning lights (panel 2) will not illuminate unless there is an actual overcurrent sensed.
		TVC SERVO PWR 1 - AC1/MNA TVC SERVO PWR 2 - AC2/MNB	7	

G&N SPS ORBIT CHANGE THRUSTING (P40)

NORMAL/BACKUP

STA/T STEP	PROCEDURE	PANEL	REMARKS
CDR	TRANS CONTR PWR - on (up) RHC PWR NORM 2 - AC RHC 2 - ARMED	1	Opens RHC 2 (CDR's) breakout switches (dc) to prevent attitude maneuvers through CMC during MTVC checks. During a burn, RCS pitch and yaw channels are disabled 1 second after SPS engine ignition.
	If RATE 1 ΔV planned, BMAG MODE PITCH - RATE 1 BMAG MODE YAW - RATE 1 or BMAG MODE (in axis) - RATE 1		RATE 1 ΔV should be used for Lambert steering burns where angular change >15° or if gyro assembly #2 failed.
	SPS GMBL MOT PITCH 1 - START SPS GMBL MOT YAW 1 - START		START position is momentary. Start motors sequentially at ≈1-sec intervals to avoid electrical overload.
	Auto switchover check THC - CW RHC - verify no MTVC control SPS GMBL ind (2) - no motion		Enables MTVC and switches TVC to channel #2. Verifies TVC control switches from channel #1 to #2 (which is off) when THC CW selected.
	Secondary TVC check SPS GMBL MOT PITCH 2 - START SPS GMBL MOT YAW 2 - START		START position is momentary. Start motors sequentially at ≈1-sec intervals.
	Confirm & set trim control SPS GMBL tw (2) - + & - Set to c.g. trim values		Verifies secondary gimbal trim control. The c.g. trim values can be obtained from DAP Data Load, para 4.10.1.6, or GRD.

STA/T STEP	PROCEDURE	PANEL	REMARKS
CDR	RHC 2 - Verify MTVC		Gimbals drive in response to RHC movement, and return to set-in values when RHC neutral. Verifies control of secondary MTVC loops through RHC. Gimbal will move proportional to RHC deflection since MTVC integrator is not enabled until engine ignition.
	THC - neutral		
	RHC PWR NORM 2 - AC/DC	1	
	Accept Complete auto att trim		Accept and reject options refer to attitude trim enable flash in step 7.
	BMAG MODE (3) - RATE 2		
	Align SC in roll		
	CMC attitude control - auto, para 4.9.1.6		
CMP	PRO	2	
	Return to step 6		
CDR	Reject Select attitude control desired, para 4.9.1		
	Verify/maneuver to thrust attitude		
CMP	(V62E for total att error display)		
	ENTR (exit R60)		
CDR	RHC PWR DIRECT (both) - MNA/MNB	1	Provides use of direct RCS to allow override of a roll auto RCS failure during SPS burn.
	MAN ATT (3) - RATE CMD		
	RATE - HIGH		If MTVC required, RATE - HIGH bypasses noise problem in SCS gyro assemblies due to thrusting vibration levels, which can cause spurious RCS jet firings.
	BMAG MODE (3) - ATT 1 RATE 2		

G&N SPS ORBIT CHANGE THRUSTING (P40)

STA/T STEP	PROCEDURE	PANEL	REMARKS
CDR	Align GDC to IMU, para 4.10.2.6	1	DSKY display option recommended because of its availability. All that need be done is set ATT SET tw to DSKY values and defer alignment until just prior to thrust.
	Check boresight star		
CMP 8	FL V50 N25 00204 (CMC GMBL drive test)	2	A manual drive, trim and MTVC check performed before CMC gimbal drive test enabled (PRO keyed).
	Accept PRO Monitor GMBL drive sequence		Enables CMC gimbal drive test.
	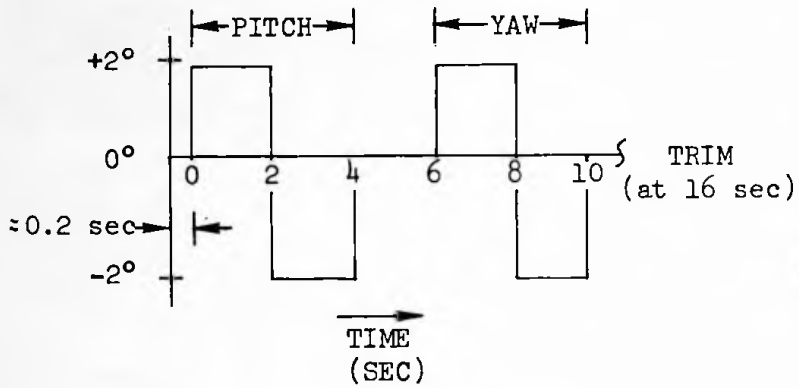		
	Reject ENTR GMBL's drive to trim position (after 4 sec)		If gimbal test sequence not desired, gimbals will drive to trim 4 sec after PRO keyed.
	Poss FL V05 N09 01703 (TF GETI <45 sec) PRO (slips GETI 45 sec from PRO)		Display - Possible program alarm.

G&N SPS ORBIT CHANGE THRUSTING (P40)

STA/T STEP	PROCEDURE	PANEL	REMARKS
CMP	or V34E	2	Terminates P40.
	FL V37 Key XXE		ROO (Colossus) turns off average g (if on), zeroes rendezvous optics mark and VHF ranging mark counters. It also sets or resets REND TRACK and UPDATE flags, depending on which programs are in progress or are called. It may also recycle into P20.
9	V06 N40 TF GETI XXBXX MIN-SEC VG XXXX.X FPS ΔV (accum) XXXX.X FPS		TF GETI - Max reading is 59 59. Sign is minus before nominal GETI, plus after. Event Timer will not agree with R1 if GETI was slipped.
CDR 10 02:00	2 min countdown Report TTI = 2 min FDAI SCALE - 5/5 Verify SPS THRUST lt - off ΔV THRUST A - NORMAL THC - ARMED	1	
CDR,CMP	RHC (both) - ARMED		
	(State Vector Integration, R41)		
00:40	If PROG alarm lt - on, CMC has slipped TIG DSKY R1 continues count to former TIG DSKY clears at new TIG -35 sec COMP ACTY lt - off (exit R41)		PROG alarm may illuminate between TIG -40 sec and TIG -35 sec. Delta amount TIG is slipped will be as required by CMC to complete state vector integration.
00:35	DSKY clears		
00:30	V06 N40 (avg g on) Check ΔV (accum) for PIPA bias		Static display with COMP ACTY lt flash every 2 sec.
00:25	R3 ≤0000.4 FPS		R3 >.4 FPS is excessive PIPA bias error (Colossus 2/15/68). Discontinue G&N thrust.

G&N SPS ORBIT CHANGE THRUSTING (P40)

NORMAL/BACKUP

STA/T STEP	PROCEDURE	PANEL	REMARKS
CDR	EMS MODE - AUTO	1	Should not set to AUTO prior to T -30 seconds to prevent buildup of erroneous signals due to accelerometer bias.
00:20	Start 2 jet ullage - THC +X		THC +X for ≈1 sec after ignition.
or			
00:15	Start 4 jet ullage - THC +X		THC +X for ≈1 second after ignition.
			Exact velocity change is not critical for ullage; there must have been a steady ullage to settle SPS propellants.
	xxxxxxxxxxxxxxxxxxxxxxxxxxxx x x No ullage DIRECT ULL pb - push RHC - control attitude x x xxxxxxxxxxxxxxxxxxxxxxxxxxxx		Direct ullage inhibits P&Y auto RCS. Maintain attitude within deadband limits.
CMP 00:05			
11	FL V99 N40 (Engine Enable)	2	CMC changes VERB/NOUN, but retains previous display in registers.
	TF GETI XXBXX MIN-SEC VG XXXX.X FPS ΔV (accum) XXXX.X FPS		
	Accept PRO Go to step 12 Reject ENTR Go to step 14 Manual trim with RCS		
	or V34E FL V37 Key XXE		ROO (Colossus) turns off average g (if on), zeroes rendezvous optics mark and VHF ranging work counters. It also sets or resets REND, TRACK, and UPDATE flags, depending on which programs are in progress or are called. It may also recycle into P20.

G&N SPS ORBIT CHANGE THRUSTING (P40)

STA/T STEP	PROCEDURE	PANEL	REMARKS
CDR 12	Ignition		
00:00	SPS THRUST lt - on		
	Poss FL V99 N40 CMC recycles to step 11	1	ΔV monitor in CMC will recycle to step 11 if it does not detect thrust in 2-4 sec from receipt of engine on bit or for 6-8 sec during normal thrust. R3 will be 59B59 until recognition.
CMP	V06 N40 TFC XXBXX MIN-SEC VG (decr) XXXX.X FPS ΔV accum (incr) XXXX.X FPS ΔV ind - decreasing	2	TFC - Time from engine cutoff. Sign is (-) before cutoff, (+) thereafter.
	xxxxxxxxxxxxxxxxxxxxxxxx If no ignition Recycle to step 11 xxxxxxxxxxxxxxxxxxxxxxxx		
IGN+1 sec	Discontinue ullage		
	Poss PROG alarm Key V05 N09E (to verify alarm) 01407 (VG reversed)		
	or 01410 (low ΔV)		ΔV too low for cross-product steering.
	FL V37 Key XXE		
	xxxxxxxxxxxxxxxxxxxxxxxx If premature shutdown Recycle to step 11 xxxxxxxxxxxxxxxxxxxxxxxx		

G&N SPS ORBIT CHANGE THRUSTING (P40)

NORMAL/BACKUP

STA/T	STEP	PROCEDURE	PANEL	REMARKS
	13	Monitor SPS Operation		
CDR		Pc ind - 95-105 psi	1	Green range on indicator is 65 to 125% (corresponds to psia). Normal Pc range is 95-105 psia.
LMP		SPS ENG INJ VLV A ind (2) - OPEN	3	
		SPS He VLV tb (both) - gray		Gray indicates valves open.
		SPS PRPLNT TK F & OXID PRESS ind (2) - 170-195 psia		
		CAUTION		
CDR		If noncritical burn & ΔP >15 psi ΔV THRUST A (B) - OFF	1	ΔP between F & OX should not exceed 15 psi during burn or degraded performance, rough combustion, and/or engine failure may result.
		FDAI - monitor errors & rates		Monitor for errors and/or rates which would require MTVC takeover.
		xxxxxxxxxxxxxxxxxxxxxxxxxxxxxxxxxxxxxxxx		
		MTVC takeover THC - CW Monitor automatic rate damping Maintain attitude control manually If no rate damping BMAG MODE (in axis) - RATE 1 ΔV THRUST A - OFF		
		xxxxxxxxxxxxxxxxxxxxxxxxxxxxxxxxxxxxxxxx		
		xxxxxxxxxxxxxxxxxxxxxxxxxxxxxxxxxxx		
		Roll att control failure MAN ATT ROLL - ACCEL CMD		ACCEL CMD position inhibits CMC roll commands and allows accel control of RCS auto coils with RHC.
		or AUTO RCS SEL ROLL (8) - OFF Use direct control		
		xxxxxxxxxxxxxxxxxxxxxxxxxxxxxxxxxxx		

G&N SPS ORBIT CHANGE THRUSTING (P40)

STA/T STEP	PROCEDURE	PANEL	REMARKS
14	Monitor SPS Engine Cutoff		
CDR	SPS THRUST lt - off	1	
CMP	FL V16 N40 (engine cutoff)	2	
	TFC (static at cutoff) XXBXX MIN-SEC		TFC - Time from cutoff. At cutoff +2.5 sec, CMC sets wide deadband in RCS DAP, then switches from TVC DAP to RCS DAP unless option to use SM RCS was selected in step 10.
	VG XXXX.X FPS		
	ΔV (accum) XXXX.X FPS		
CDR	Event Timer = Thrust duration	1	
C/O+1 sec	ΔV THRUST A - OFF		Set to OFF 1 sec after thrust termination (SPS THRUST lt out).
	Report engine off		
	Pc = 0		
LMP	SPS ENG INJ VLV A ind (2) - CLOSE	3	
	SPS He VLV tb (both) - bp		Barber pole indicates valves closed.
	For free drift		
CDR	BMAG MODE (3) - RATE 2	1	
	CMC MODE - FREE		
			Turn SPS GMBL MOT switches OFF sequentially to avoid power surge.
	SPS GMBL MOT PITCH 2 - OFF		Turning servo #2 off first minimizes switching in the logic.
	SPS GMBL MOT YAW 2 - OFF		
	SPS GMBL MOT PITCH 1 - OFF		
	SPS GMBL MOT YAW 1 - OFF		
	SCS TVC SERVO PWR 2 - OFF	7	
	SCS TVC SERVO PWR 1 - OFF		
	EMS MODE - STBY		
	Record ΔV ind	1	
CMP	PRO	2	At this point, CMC sets minimum deadband in RCS DAP.

G&N SPS ORBIT CHANGE THRUSTING (P40)

NORMAL/BACKUP

STA/T	STEP	PROCEDURE	PANEL	REMARKS
CMP	15	FL V16 N85 (VG vector components)	2	Display - Components of VG vector.
		VGX, Y, Z (cont) XXXX.X FPS		Velocity to be gained resolved along CSM X, Y, and Z control axes. The VG vector is updated each computation cycle.
CDR		If VG component to be nulled RHC/THC - null out VG components THC - neutral, LOCKED RHC - LOCKED		Optional.
CMP		PRO		CMC sets maximum deadband in RCS DAP.
		(R30 - Orbital Parameter Display)		
	16	If R30 desired Key V82E		R30 displays will be automatically updated at 2-second intervals if called at this point, since average g is still on.
		FL V16 N44 (orbital parameters)		
		Ha XXXX.X NM		Ha = altitude of apogee above launch pad radius (earth orbit) or of apolune above the lunar radius at most recently defined lunar landing site (lunar orbit).
		Hp XXXX.X NM		Hp = altitude of perigee above the launch pad radius (earth orbit) or of perilune above lunar radius at most recently defined lunar landing site (lunar orbit).
		TFF XXBXX MIN-SEC		TFF = time of free fall to 49.4 NM above launch pad radius (earth orbit) or 5.8 NM above lunar radius at most recently defined lunar landing site (lunar orbit).

STA/T STEP	PROCEDURE	PANEL	REMARKS
CMP	If Hp >49.4 NM R2 = 59B59 PRO (exit R30)	2	R00 (Colossus) turns off average g (if on), and zeroes rendezvous mark and VHF ranging counters. It also sets, or resets, REND, TRACK, and UPDATE flages, depending on which programs are in progress or are called. Under certain conditions, it may recycle into P20.
17	FL V37 Key XXE		
18	Set Controls After Tailoff		Monitor main bus voltage for maximum allowable (31 vdc) during power down sequence.
LMP	MN BUS TIE (2) - OFF	5	
CMP	Record burn data		Recorded burn data should include the following: ΔV accomplished SPS propellant quantity remaining.
CDR	EMS FUNC - OFF TRANS CONTR PWR - OFF FCSM SPS A - RESET/OVERRIDE	1	
LMP	Charge batteries	3	

G&N SPS ORBIT CHANGE THRUSTING (P40)

NORMAL/BACKUP

STA/T	STEP	PROCEDURE	PANEL	REMARKS
		4.14.3 G&N SM RCS ORBIT CHANGE THRUSTING (P41)		The purpose of this procedure is: To compute preferred CSM attitude and preferred IMU orientation for RCS thrusting maneuver and to maneuver CSM to thrusting attitude (R60).
		CMC - on (required), para 4.10.1.2 ISS - on with orientation known (required), para 4.10.1.2 & 4.11		
		SCS - on (required), para 4.10.2.4		All AUTO RCS SEL switches must be OFF prior to SCS - on. G&C circuit breakers on all panels are closed except as defined in Limited Use Controls, para 4.8.4.
CDR		CMC ATT - IMU .05 G sw - OFF Orbit Change Vehicle Preparation (desired), para 4.13 Test C/W Lamps Load and Activate DAP, para 4.10.1.6 & 8	1	
CMP	1	Set Event Timer to read 00:00 at GETI		
	2	Select P41 Key V37E 41E	2	This program should have been preceded by a prethrusting program.
		Poss PROG alarm Key V05 N09 (to verify alarm) 00210 (ISS not on)		
		or XXXXX (IMU orientation unknown)		
		FL V37 Key XXE		When control is returned to CMC, program cycles through ROO, which way set, or reset, REND, TRACK, and UPDATE flags, depending on which programs are in progress or are called.

STA/T	STEP	PROCEDURE	PANEL	REMARKS
				At this point (after R02 exited), CMC computes initial thrust direction and initial value of VG (local vertical), computes preferred IMU orientation, sets PREFERRED orientation flag, and stores desired attitude for use in R60. Final attitude will be computed during R60. The 0.5-degree deadband is set in RCS DAP, and 3-AXIS flag is reset.
CMP	3	If VG display desired Key V16 N81E VGX, Y, Z XXXX.X FPS (lcl vert at GETI)	2	Display is available until average g turned on (GETI -30 sec).
		(R60 - Attitude Maneuver)		Maneuvers CSM to an attitude specified in P41. Maneuver is performed automatically by G&N, or manually, with an optional final automatic G&N controlled trim maneuver.
	4	FL V50 N18 (select CMC - auto) R, P, Y XXX.XX DEG		Display desired final gimbal angles.
		Establish Total Attitude Displays, para 4.9.2.5		Both FDAI's should be selected to provide redundant displays.
CDR		Accept BMAG MODE (3) - RATE 2 CMC Attitude Control - auto, para 4.9.1.6	1	Prevents BMAG's from hitting stops during maneuvers.
CMP		PRO	2	Initiates auto maneuver without a review of final gimbal angles.
		Reject Select attitude control desired, para 4.9.1 ENTR, go to step 6		

G&N SM RCS ORBIT CHANGE THRUSTING (P41)

NORMAL/BACKUP

STA/T	STEP	PROCEDURE	PANEL	REMARKS
	5	Auto maneuver		
CMP		V06 N18 (final attitude)	2	
		R, P, Y XXX.XX DEG		
		Monitor FDAI's		SC begins maneuver to final attitude when PRO keyed in step 4. Maneuver rate will be as last defined by DAP load. ICDU drives to achieve final gimbal angles. CMC will monitor for RHC inputs, which will be interpreted as a manual override and will terminate auto maneuver.
		If RHC used or SCS selected, go to step 6		
	6	FL V50 N18 (att trim enable)		This step should be completed at least 30 sec prior to GETI, or GETI will slip.
		R, P, Y XXX.XX DEG		Display of final gimbal angles in registers.
CDR		Accept BMAG MODE (3) - RATE 2	1	
		CMC attitude control - auto, para 4.9.1.6		
CMP		PRO, return to step 8	2	
		Reject Select attitude control desired, para 4.9.1		
		Verify maneuver to thrusting attitude		
		V62E for total attitude error display		
CDR		MAN ATT (3) - RATE CMD	1	
		BMAG MODE (3) - ATT 1 RATE 2		
		Align GDC to IMU, para 4.10.2.6		The DSKY display option is recommended because of its availability - all that need be done is set ATT SET tw to DSKY values and defer alignment until just prior to thrust.

STA/T	STEP	PROCEDURE	PANEL	REMARKS
	7	Monitor VG display (static)		
CMP		V06 N85 (VG vector components)	2	
		VGX, Y, Z (cont) XXXX.X FPS		Vector components resolved along CSM control axes.
05:00				
	8	Ignition preparation		Sets up nontime-critical switching required for thrusting.
CDR		Check boresight star		
		TRANS CONTR PWR - on (up)	1	
		EMS MODE - STBY		
		EMS FUNC - ΔV SET		
		Set ΔV ind to reqd ΔV		Set to ΔV obtained from charts, in P30 and/or MSFN.
		EMS FUNC - ΔV		
		(State Vector Integration, R41)		
CMP				
00:40		If PROG alarm lt - on, CMC has slipped TIG		PROG alarm may illuminate between TIG -40 sec and TIG -35 sec. Delta amount TIG is slipped will be as required by CMC to complete state vector integration.
		DSKY R1 continues count to former TIG		
		DSKY clears at new TIG -35 sec		
		COMP ACTY lt - off (exit R41)	2	
00:35		DSKY clears		
00:30	9	V16 N85 (avg g on)		Static display, with COMP ACTY lt flash every 2 sec.
		Check ΔV (accumulated) for PIPA bias		
00:25		R3 ≤0000.4 FPS		R3 >.4 FPS is excessive PIPA bias error (Colossus 2/15/68). Discontinue G&N thrust.
CDR,CMP		RHC (both) - ARMED		
		THC - ARMED		
CDR		LIM CYCLE - OFF	1	For SCS translations.

G&N SM RCS ORBIT CHANGE THRUSTING (P41)

NORMAL/BACKUP

STA/T STEP	PROCEDURE	PANEL	REMARKS
CDR	EMS MODE - AUTO	1	Should not be set to AUTO prior to T -30 seconds, in order to avoid error buildup due to accelerometer bias.
CMP 10	RCS Burn		
00:00	FL V16 N85 (request null VG)	2	Event timer not valid if GETI slipped.
	VGX, Y, Z (cont) XXXX.X FPS		These values are resolved along CSM axes, and before maneuver in step 4.
CDR	Manually null VG		Command manual translations and rotations to null VG components.
11	Burn complete		
	EMS MODE - STBY		
	Record ΔV ind		
	EMS FUNC - OFF	1	
	TRANS CONTR PWR - OFF		
	THC - neutral LOCKED		
CDR,CMP	RHC (both) - LOCKED		
	(R30 - Orbital Parameter Display)		
12	If R30 desired		R30 displays will be automatically updated at 2-second intervals if called at this point, since average g is still on.
CMP	Key V82E	2	
	FL V16 N44		
	Ha XXXX.X NM		Ha = altitude of apogee above launch pad radius (earth orbit) or of apolune above lunar radius at most recently defined lunar landing site (lunar orbit).
	Hp XXXX.X NM		Hp = altitude of perigee above launch pad radius (earth orbit) or of perilune above lunar radius at most recently defined lunar landing site (lunar orbit).

G&N SM RCS ORBIT CHANGE THRUSTING (P41)

STA/T STEP	PROCEDURE	PANEL	REMARKS
CMP	TFF XXBXX MIN-SEC	2	TFF = time of free fall to 49.4 NM above launch pad radius (earth orbit) or 5.8 NM above lunar radius at most recently defined lunar landing site (lunar orbit).
			R00 turns off average g when PRO is keyed.
	If Hp >49.4 NM R2 = 59B59 PRO (exit R30)		
13	FL V37 Key XXE		R00 (Colossus) zeroes rendezvous mark and VHF ranging counters. It also sets, or resets, REND, TRACK, and UPDATE flags, depending on which programs are in progress or are called. Under certain conditions, it may recycle into P20.

G&N SM RCS ORBIT CHANGE THRUSTING (P41)

NORMAL/BACKUP

STA/T	STEP	PROCEDURE	PANEL	REMARKS
		4.15 SCS ORBIT CHANGE		
		4.15.1 SCS/SPS ORBIT CHANGE THRUSTING		
		CMC - on (desired), para 4.10.1.2		Necessary for P47 monitor.
		ISS - on and orientation known (desired), para 4.10.1.2		Necessary for P47 monitor.
		Orbit Change Vehicle Preparation (desired), para 4.13		
		SCS - on (required), para 4.10.2.2		All AUTO RCS SEL switches must be at OFF prior to SCS - on. Circuit breakers on all panels should be closed except as defined in Limited Use Controls, para 4.8.4.
CDR		CMC ATT - IMU .05 G sw - OFF	1	
ALL	1	Perform C&WS Operational Check, para 4.7.5.1		
CDR		EMS MODE - STBY EMS FUNC - ΔV SET Set ΔV ind EMS FUNC - ΔV		
CMP	2	Key V37E 00E	2	Selected to maintain state vector within 9 minutes of present time.
CDR	3	Establish Total Attitude displays, para 4.9.2.5		In order to obtain telemetry on BMAG attitude error, FDAI SELECT switch must be in 1 or 2 position (with SCS displays).
	4	SCS Attitude Maneuver to thrusting attitude, para 4.10.2.5		

SCS/SPS ORBIT CHANGE THRUSTING

STA/T	STEP	PROCEDURE	PANEL	REMARKS
CDR	5	Establish SCS Attitude Hold, para 4.9.1.4 Check boresight star		To minimize fuel consumption, low rate, max deadband, and limit cycle should be selected.
	6	Ignition Preparation		Sets up the non-time critical switching required for thrusting.
LMP		SPS He VLV tb (both) - bp	3	Barber pole indicates valves are closed.
		SPS He VLV (both) - AUTO		
		MN BUS TIE (2) - on (up)	5	
CDR		LV/SPS IND SII/SIVB - GPI	1	
		FCSM SPS A - on (up)		
		RHC PWR DIRECT (both) - OFF		
		SCS TVC (2) - AUTO		
		TVC GMBL DRIVE (2) - AUTO		
		ΔV CG - LM/CSM or CSM		
		Establish ullage select, para 4.8.1		
CMP	7	If P47 (thrust monitor) Key V37E 47E DSKY - P47	2	If G&N is operative. P47 should be called just prior to thrusting and terminated as soon as possible thereafter in order to minimize errors of bias and average G. P47 is normally used during rendezvous final phase. Any ΔV under G&N control during that phase would require P34, P40, or P41. Range, range rate, and theta may be displayed during P47 by calling R31. Range, range rate, and phi may be displayed during P47 by calling R34. Orbital parameters may be displayed by calling R30.
		Poss PROG alarm Key V05 N09E (to verify alarm) 00210 (ISS not on) or XXXXX (IMU orientation unknown)		
		FL V37 Key XXE		RSET and KEY REL pressed when nature of problem determined. When CMC regains control, program cycles through R00, which may set or reset RENDEZVOUS, TRACK and UPDATE flags, depending on which programs are in progress or are called.

SCS/SPS ORBIT CHANGE THRUSTING

STA/T STEP	PROCEDURE	PANEL	REMARKS
CMP	FL V16 N83 (ΔV components)	2	
	ΔVX, Y, Z (cont) XXXX.X FPS		Displayed when average G turned on. CMC required 1.4 seconds (earth orbit) or 2.5 seconds (lunar orbit) per time step to turn on average G. Time step = 240 seconds (earth orbit) or 350 seconds (lunar orbit). Registers read 00000 until thrusting maneuver is started, then update every 2 seconds. PIPA bias errors can be monitored until ignition.
05:00			
8	Gimbal Drive and Trim Check		
CDR	SCS TVC SERVO PWR 1 - AC1/MNA	7	PITCH and YAW GMBL caution/warning lights (panel 2) indicate only an overcurrent to the motors.
	SCS TVC SERVO PWR 2 - AC2/MNB		
	TRANS CONTR PWR - on (up)	1	
	RHC PWR NORM 2 - AC RHC 2 - ARMED		Opens RHC 2 (commander's) breakout switch dc circuits to prevent loss of attitude reference. Prevents RCS jets from firing when RHC is used for MTVC check. Normally IGN 1 signal disables RCS pitch and yaw channels 1 second after SPS engine ignition.
	Primary TVC check		Start motors sequentially at ≈1 second intervals to avoid electrical overload.
	SPS GMBL MOT PITCH 1 - START SPS GMBL MOT YAW 1 - START		START position is momentary.
	Confirm trim control on indicators		Gimbals drive in response to thumbwheel movement. Verifies primary gimbal trim control.
	Auto switchover check THC - CW RHC 2 - verify no MTVC		
	SPS GMBL ind (2) - no motion		Verifies TVC control switches from channel #1 to channel #2 (off) when THC - CW is selected.

SCS/SPS ORBIT CHANGE THRUSTING

NORMAL/BACKUP

STA/T STEP	PROCEDURE	PANEL	REMARKS
CDR	Secondary TVC check		
	SPS GMBL MOT PITCH 2 - START	1	START position is momentary.
	SPS GMBL MOT YAW 2 - START		
	Verify trim control		Verifies secondary gimbal trim control.
	Verify MTVC control		Gimbals drive in response to RHC movement, and return to set-in values when RHC is neutral. Verifies control of secondary MTVC loops through the RHC.
	THC - neutral		
	SPS GMBL tw (2) - set and confirm final desired gimbal position		Gimbals are trimmed in primary channel to thrusting values (SCS modes).
9	RHC PWR DIRECT (both) - MNA/MNB		Enables manual direct RCS override of a roll auto RCS failure during thrusting.
	RHC 2 - null att errors		The needles can be used as an error null reference in case of an MTVC contingency takeover from an automatic ΔV mode.
	ATT DBD - MIN		Set to MIN as errors are nulled.
	RHC PWR NORM (both) - AC/DC		
CMP 10	2-minute countdown		
02:00	Report TTI = 2 minutes	2	
CDR	FDAI SCALE - 5/5	1	
	Verify SPS THRUST lt - off		
	ΔV THRUST A - NORMAL		Guarded.
	THC - ARMED		
	LIM CYCLE - OFF		
00:30	EMS MODE - AUTO		Selecting AUTO after T-30 sec prevents error buildup due to accelerometer bias.

SCS/SPS ORBIT CHANGE THRUSTING

STA/T STEP	PROCEDURE	PANEL	REMARKS
CDR			
00:20	Start 2 jet ullage		Exact velocity change is not critical for ullage; there must have been a steady ullage to settle SPS propellants.
or			
00:15	Start 4 jet ullage		
	xxxxxxxxxxxxxxxxxxxxxxxxxxxxxxxx		
	No ullage		
	DIRECT ULL pb - push hold	1	Direct ullage inhibits pitch and yaw auto RCS control. Attitude should be maintained manually.
	RHC 2 - control attitude		
	xxxxxxxxxxxxxxxxxxxxxxxxxxxxxxxx		
11	Ignition		
00:00	THRUST ON pb - push for ignition		
	xxxxxxxxxxxxxxxxxxxxxxxxxxxxxxxx		
	If no ignition		
	SPS THRUST - DIRECT ON		Bypasses FCSM.
	or Terminate maneuver		
	xxxxxxxxxxxxxxxxxxxxxxxxxxxxxxxx		
	SPS THRUST lt - on		
IGN+1 sec	RATE - HIGH		Bypasses noise problem in SCS gyro assemblies because of thrusting vibration levels and provides backup to auto selection of high rate in pitch and yaw TVC.
	Discontinue ullage		
	xxxxxxxxxxxxxxxxxxxxxxxxxxxxxxxxxxxx		
	Premature shutdown		
	If SPS ROUGH ECO lt - on	2	
	Continue/initiate ullage		
	FCSM SPS A - RESET/OVERRIDE	1	Resets FCSM.

SCS/SPS ORBIT CHANGE THRUSTING

NORMAL/BACKUP

STA/T STEP	PROCEDURE	PANEL	REMARKS
CDR	FCSM SPS A - on (up) Return to step 11	1	
	or Terminate maneuver		
	xxxxxxxxxxxxxxxxxxxxxxxxxxxxxxxxxxxxxx		
12	Monitor SPS Operation SPS Pc ind - 95-105 psia		
LMP	SPS ENJ INJ VLV A ind (2) - OPEN	3	
	SPS He VLV tb (both) - gray		Gray indicates valves open.
	SPS PRPLNT TK F & OXID PRESS ind (2) - 170-195 psia		
	CAUTION		ΔP between F & OXID should not exceed 15 psi during a burn or degraded performance, rough combustion and/or engine failure may result.
	If noncritical burn & ΔP >15 psi, ΔV THRUST A(B) - OFF		
CDR		1	
CDR or CMP	FDAI - monitor att error & rates	1,2	
	xxxxxxxxxxxxxxxxxxxxxxxxxxxxxxxxxxxxxx		
	MTVC takeover		
CDR	THC - CW Monitor automatic rate damping		
	or Maintain att control manually		
	If no rate damping BMAG MODE (in axis) - RATE 1	1	
	ΔV THRUST A - OFF		Place ΔV THRUST A - OFF when rates are damped.
	xxxxxxxxxxxxxxxxxxxxxxxxxxxxxxxxxxxxxx		

SCS/SPS ORBIT CHANGE THRUSTING

STA/T	STEP	PROCEDURE	PANEL	REMARKS
		xxxxxxxxxxxxxxxxxxxxxxxxxxxxxxxxx		
		No roll att control		
CDR		MAN ATT ROLL - ACCEL CMD	1	
		RHC - control roll rates		
		or AUTO RCS SEL (16) - OFF	8	
		Control roll using direct		
		xxxxxxxxxxxxxxxxxxxxxxxxxxxxxxxxx		
	13	Monitor SPS Engine Cutoff		
		SPS THRUST lt - off	1	
		ΔV ind - 0		
		Event Timer = thrust duration		
		ΔV THRUST A - OFF		This function is time-critical, as it is a backup to the normal SPS thrust cutoff.
		For free drift		
		MAN ATT (3) - ACCEL CMD		
		Report engine cutoff		
		Pc = 0		
LMP		SPS ENG INJ VLV A ind (2) - CLOSE	3	
		SPS He VLV tb (both) - bp		Barber pole indicates valves are closed.
	14	Set Controls After Tailoff		
CDR		SPS GMBL MOT PITCH 2 - OFF	1	Turning off servo No. 2 first minimizes switching in the logic. Set GMBL MOT switches OFF at 1 second intervals to avoid electrical overload.
		SPS GMBL MOT YAW 2 - OFF		
		SPS GMBL MOT PITCH 1 - OFF		
		SPS GMBL MOT YAW 1 - OFF		
		EMS MODE - STBY		
CMP		Record ΔV ind		
CDR		SCS TVC SERVO PWR (2) - OFF	7	
		ATT DBD - MAX	1	
CDR,CMP		THC, RHC - LOCKED		

SCS/SPS ORBIT CHANGE THRUSTING

STA/T	STEP	PROCEDURE	PANEL	REMARKS
CDR		FCSM SPS A - RESET/OVERRIDE (To re-zero registers, V32E)	1	Provides capability to monitor another burn without going through ROO.
CMP	15	PRO (exit P47)	2	Key PRO when termination of P47 is desired.
	16	FL V37 Key XXE		ROO in Colossus turns off average G (if on), and zeros rendezvous mark and VHF ranging counters in the CMC. It also sets or resets the RENDEZVOUS, TRACK, and UPDATE flags, depending on which programs are in progress or are called. It may recycle into P20 under certain conditions.
LMP		MN BUS TIE (2) - OFF	5	
CDR		EMS FUNC - OFF	1	
LMP		Charge batteries, para 4.7.3.5		

STA/T	STEP	PROCEDURE	PANEL	REMARKS
		4.15.2 SCS/SM RCS ORBIT CHANGE THRUSTING		
		CMC - on (desired), para 4.10.1.2		Provides P47 monitor.
		ISS - on and orientation known (desired), para 4.10.1.2		Provides P47 monitor.
		SCS - on (required), para 4.10.2.2		
CDR		CMC ATT - IMU	1	
		.05 G sw - OFF		
CMP	1	Key V37 00E	2	Maintains state vector within 9 minutes of present time.
CDR	2	Establish Total Attitude display, para 4.9.2.5		
	3	Select attitude control desired, para 4.9.1 Maneuver to thrusting attitude		
	4	Establish SCS Attitude Hold, para 4.9.1.4		Maximum deadband, low rate and limit cycle are recommended for fuel conservation until prior to thrusting.
05:00	5	Check boresight star		
	6	For X-axis thrusting		
		EMS MODE - STBY	1	
		EMS FUNC - ΔV SET		
		Set ΔV ind		
		EMS FUNC - ΔV		
CMP	7	Key V37E 47E (for thrust monitor)	2	If G&N operative. P47 should be called just prior to thrusting and terminated as soon as possible thereafter in order to minimize errors of bias and average G. P47 is normally used during rendezvous final phase. Any ΔV under G&N control during that phase

SCS/SM RCS ORBIT CHANGE THRUSTING

NORMAL/BACKUP

STA/T STEP	PROCEDURE	PANEL	REMARKS
			would require P34, P40, or P41. Range, range rate, and theta may be displayed during P47 by calling R31. Range, range rate, and phi may be displayed during P47 by calling R34. Orbital parameters may be displayed by calling R30.
CMP	Poss PROG alarm Key V05 N09E (to verify alarm) 00210 (ISS not on) or XXXXX (IMU orientation unknown)	2	
	FL V37 Key XXE		RSET and KEY REL pressed when nature of problem determined. When CMC regains control, program cycles through R00, which may set or reset RENDEZVOUS, TRACK, and UPDATE flags, depending on which programs are in progress or are called. It may recycle into P20 under certain conditions.
8	FL V16 N83 (ΔV components) ΔVX, Y, Z (cont) XXXX.X FPS		Displayed when average G turned on. CMC requires 1.4 seconds (earth orbit) or 2.5 seconds (lunar orbit) per time step to turn on average G. Time step = 240 seconds (earth orbit) or 350 seconds (lunar orbit). Registers read 00000 until thrusting maneuver started, then update every 2 seconds. PIPA bias errors can be monitored until ignition.
00:30 9	RHC (both) - ARMED THC - ARMED		
CDR	ATT DBD - MIN LIM CYCLE - OFF EMS MODE - AUTO	1	

SCS/SM RCS ORBIT CHANGE THRUSTING

STA/T	STEP	PROCEDURE	PANEL	REMARKS
00:00				
	10	RCS burn		
CDR		Manually null VG		
	11	EMS MODE - STBY Record ΔV components EMS FUNC - OFF THC - neutral LOCKED RHC - LOCKED (To re-zero registers, V32E)	1	Provides capability to monitor another burn without going through R00.
CMP	12	PRO (exit P47)	2	
	13	FL V37 Key XXE		R00 in Colossus turns off average G (if on), and zeroes rendezvous mark and VHF ranging counters in CMC. It also sets or resets RENDEZVOUS, TRACK, and UPDATE flags, depending on which programs are in progress or are called. It may recycle into P20 under certain conditions.

STA/T	STEP	PROCEDURE	PANEL	REMARKS
		4.16 DEORBIT AND ENTRY VEHICLE PREPARATION		This section applies to any deorbit: SPS or RCS, pure or hybrid, whether G&N, SCS or manually controlled.
		4.16.1 DEORBIT GENERAL SYSTEM MANAGEMENT		
		Cabin Cold-Soak Operation (GETI Minus TBD Hrs) if desired, para 4.7.4.14		Provides cabin cold-sink during entry.
	1	Obtain update from ground		Para 4.16.1 through 4.16.3 should be performed prior to deorbit burn to minimize crew workload between deorbit and entry.
LMP	2	Set T/C BASIC, para 4.7.6.1, except		
		S BD ANT OMNI A - C	3	
		TAPE RCDR FWD - off (center)		MSFN will dump and rewind tape recorder and return control of DSE to crew at last MSFN contact prior to deorbit burn. At this time, TAPE RCDR switches will be placed to RECORD and off (center) and PCM BIT RATE switch to HIGH in preparation for DSE operation during deorbit SPS burn, entry and earth landing phases.
		PCM BIT RATE - HIGH		
		cb panel 277 - all closed	277	
CMP, LMP	3	Perform Propulsion Systems checks, para 4.7.2.1 through 4.7.2.3		Steps 3 through 10 contain those system and subsystem verifications necessary to ensure operational status of the spacecraft prior to commencing thrust and entry procedures.
	4	Perform EPS DC and AC Voltage checks, para 4.7.3.3 and 4.7.3.4		
	5	Perform ECS Monitoring Check, para 4.7.4.1		
	6	Perform C&WS Operational Check, para 4.7.5.1		

STA/T	STEP	PROCEDURE	PANEL	REMARKS
CMP, LMP	7	Stow loose gear		
	8	Perform DSKY Check Procedure, para 4.10.1.10		These CMC/DSKY checks provide confidence in CMC, caution and warning, DSKY operations.
	9	Perform CMC Self-Check Procedure, para 4.10.1.11		
LMP	10	Perform DSKY Condition Light Test, para 4.10.1.12		
	4.16.2	EMS DEORBIT AND ENTRY TEST		The RSI upper lt (G >.2) and RSI lower lt (G <.2) are relevant to entry from a lunar mission. G >.2 light provides cue for start of program 67.
	1	Initial EMS preparation		
CDR		Verify EMS FUNC - OFF	1	
		cb EMS (2) - close	8	
		EMS MODE - STBY	1	
		Adjust alphanumeric brightness (option)		
	2	EMS FUNC - EMS TEST 1		Test 1 checks lower trip-point of .05g comparator.
		Wait 5 seconds		ΔV/EMS SET switch is used both for slewing G-V scroll and for setting RANGE indicator.
	3	EMS MODE - AUTO (wait 10 sec min)		EMS considered stable after 10 seconds.
		Check ind lts - off		
		RANGE ind - 0.0		
		Slew scroll until hairline is superimposed on notch in self-test pattern		EMS scroll reverse slew capability is limited to one inch.

STA/T	STEP	PROCEDURE	PANEL	REMARKS
CDR	4	EMS FUNC - EMS TEST 2 (wait 10 sec) .05 G lt - on (all others off)	1	Test 2 checks upper trip-point of .05g comparator. Considered stable in TEST 2 configuration after 10 seconds.
	5	EMS FUNC - EMS TEST 3 .05 G lt - on RSI Lower lt - on (10 sec after .05 G lt) Set RANGE ind to 58 NM ±0.0		Test 3 checks trip-point of RSI lower light (G < .2). For negative numbers RANGE indicator will display a minus number in the most significant decade. No sign will appear for positive numbers.
	6	EMS FUNC - EMS TEST 4 .05 G lt - on (all others off) G-V trace (during 10-sec period) within test pattern After 10 sec, G-V trace stops at lower right corner of test pattern at ≈9g RANGE ind (during 10-sec period) counts toward zero. After 10 sec, stops at ≈0±0.2		Test 4 checks range-to-go integrator circuits, G-servo circuit, G-V plotter, and range-to-go circuits.
	7	EMS FUNC - EMS TEST 5 .05 G lt - on RSI upper lt - on (10 sec after .05 G lt) RANGE ind - 0.0		This initializes EMS range integrator to 37K fps. Test 5 checks upper trip point of RSI upper light (G >.2). Enables slewing of scroll to start of entry pattern.

STA/T STEP	PROCEDURE	PANEL	REMARKS
CDR	Scribe traces vertical line ≈9g to 0.22±0.1 and stops (trace within test pattern) Align scroll to entry pattern (hairline on 37K ft/sec line)	1	
8	EMS FUNC - RNG SET G-V traces vertical line ≈0.22g to 0±0.1 and stops Set RANGE ind to +1586.8 fps		Either RNG SET or ΔV SET position enables slewing of RANGE ind. In this case, using RNG SET position to set in a ΔV TEST value minimizes switching.
9	EMS FUNC - Vo SET Slew G-V scroll assy to predicted inertial entry velocity		This setting of predicted inertial velocity enables time-saving because value can be trimmed rather than set, after deorbit ΔV.
10	EMS FUNC - ΔV TEST SPS THRUST lt - on ΔV ind decreases (10 seconds) SPS THRUST lt - off at ≈-0.1 on ΔV ind ΔV ind stops at -20.8±20.7 fps		ΔV TEST checks ΔV circuitry. Rotate EMS FUNC switch counterclockwise to avoid reinitializing integrator to 37K fps (in TEST 5).
11	EMS MODE - STBY		

DEORBIT AND ENTRY VEHICLE PREPARATION

STA/T STEP	PROCEDURE	PANEL	REMARKS
	4.16.3 DEORBIT SYSTEM PREPARATION		
ALL	Perform Pressure Suit Circuit and PGA Check at 5.0 psia, para 4.7.4.9		
	Mae Wests - donned		
CDR	SUIT CKT RET VLV - PUSH TO CLOSE	380	
	EMER CAB PRESS vlv - OFF	351	
-01:00			Time scale at this point is hours and minutes.
1	CM Engine Preheating Preparation		
	cb RCS LOGIC (2) - close	8	
	CM RCS LOGIC - on (up)	1	
CMP	CM RCS HTRS - on (up) (until lowest reading is 4.9 vdc or 20 min) (SYS TEST (2) - 5C, D, 6A, B, C, D)	101	
2	WASTE H2O DUMP - OFF		
3	UR DUMP - OFF		
4	Align RSI and GDC, para 4.9.6.3		RSI - Roll stability indicator.
5	Set FDAI 2 on ORB RATE & restow, para 4.10.2.8		
6	Perform C&WS Operational Check, para 4.7.5.1		
7	CM RCS heating completion		
-00:40	CM RCS HTRS - OFF		

NORMAL/BACKUP

STA/T	STEP	PROCEDURE	PANEL	REMARKS
	8	Pyro Battery Check		
CMP		cb PYRO A SEQ A - close	250	
		cb PYRO B SEQ B - close		
LMP		DC IND sel - PYRO BAT A (B)	3	
		DC VOLTS ind - 37.0-37.5		
		DC IND sel - MAIN BUS A		
		xxxxxxxxxxxxxxxxxxxxxxxxxxxxxxxxxxxxxxxxxx		
		If PYRO BAT A (B) < 35 vdc		
CMP		cb PYRO A (B) SEQ A (B) - open	250	
		cb PYRO A (B) TIE TO BAT BUS A (B) - close		
		xxxxxxxxxxxxxxxxxxxxxxxxxxxxxxxxxxxxxxxxxx		
		cb MNA BAT C - close	275	
		cb MNB BAT C - close		
-00:35				
	9	Perform P52 IMU Alignment, para 4.11.2		
CDR	10	Panel 8 - all cb closed except	8	
		cb PL VENT FLT/PL - open		
		cb FLOAT BAG (3) - open		
	11	CM RCS Check		
		SECS LOGIC (both) - on (up)		
		SECS PYRO ARM (2) - on (up)		
CMP		RCS TRNFR - CM	2	CM position is momentary.
		CM RCS PRESS - on (up)		Guarded. On position is momentary.

STA/T	STEP	PROCEDURE	PANEL	REMARKS
CMP		Test thrusters		
		RCS IND sel - CM 1, then 2	2	
		CM RCS He PRESS ind - 4000-4450 psia		
		CM RCS MANF PRESS ind - 287-302 psia		
		RCS TRNFR - SM		SM position is momentary.
CDR		SECS PYRO ARM (2) - SAFE	8	Lever-lock.
		SECS LOGIC (both) - OFF		Lever-lock.
	12	If SCS - select P00		
	13	ΔV Setup		
		EMS FUNC - ΔV SET	1	
		Set ΔV ind		
		EMS FUNC - ΔV		

STA/T	STEP	PROCEDURE	PANEL	REMARKS
		4.17 G&N DEORBIT AND ENTRY		
		This section applies to any G&N-controlled deorbit, regardless of the propulsion method.		
		4.17.1 G&N RETURN TO EARTH PROGRAM (P37)		Purpose of P37 is to compute a return-to-earth trajectory for CSM from outside lunar sphere of influence at TIG. P37 computes and displays preliminary series of parameters based on conic trajectory and crew-specified time of ignition, maximum change in velocity, and entry angle. Upon acceptance, program computes and stores target parameters for use by P40 or P41. P37 assumes no MSFN contact required.
		CMC - on (required), para 4.10.1.2 ISS - on & orientation known (desired), para 4.10.1.2 and 4.11 SCS - on (desired), para 4.10.2.4 DAP Data Load - complete (desired), para 4.10.1.6 & 8		Desired to provide MGA display (step 10).
CMP	1	Key V37E 37E DSKY - P37	2	
	2	FL V06 N33 (GETI) 00XXX. HRS 000XX. MIN 0XX.XX SEC Accept Record GETI PRO Reject V25E, load desired values		Ground elapsed time of ignition.

NORMAL/BACKUP

STA/T	STEP	PROCEDURE		PANEL	REMARKS
CMP	3	FL V06 N60		2	
		Blank			
		V PRED	XXXXX. FPS		Maximum allowable change in velocity.
		GAMMA EI	XXX.XX DEG		Flight path angle between inertial velocity and local horizontal at entry interface (65.8 NM). Minus indicates flight path below horizontal plane. If zero-loaded, computation is solved to hit center of entry corridor. Otherwise, computation is solved to hit angle entered.
		Accept PRO			
		Reject V25E, load desired values			
		Poss PROG alarm (computation problem)			Indicates either (a) state vector at TIG in lunar sphere of influence, (b) solution does not converge due to excessive iterations, or (c) desired flight path angle not reached.
		FL V05 N09			
		XXXXX			
		V32E			
		RSET, return to step 2			
	4	FL V06 N61 (entry data)			
		Impact Lat (+North)	XXX.XX DEG		
		Impact Long (+East)	XXX.XX DEG		
		Accept Record values			
		PRO			
		Reject V32E, return to step 2			
	5	FL V06 N39			
		ΔT Trans	00XXX. HRS		Time required for transfer from GETI to time of entry at 65.8 NM (Fischer ellipsoid).
			000XX. MIN		
			0XX.XX SEC		

G&N RETURN TO EARTH PROGRAM(P37)

STA/T STEP	PROCEDURE	PANEL	REMARKS
CMP	Accept Record values PRO Reject V32E, return to step 2	2	
6	FL V06 N60 Blank V PRED XXXXX. FPS Gamma EI XXX.XX DEG Accept Record values PRO Reject V32E, return to step 2		
7	FL V06 N81 (ΔV components) ΔVX, Y, Z (Lcl Vert at GETI) XXXX.X FPS Accept Record values PRO		
8	If new values loaded (steps 4, 5, 6) FL V04 N06 (propulsion code) 00007 (option code) 00001 (CMC assumed option) Blank Accept PRO Go to step 9 Reject V22E, load desired option Poss FL V05 N09 (computation prob) XXXXX V32E RSET Return to step 2		Code 1 in R2 indicates data intended for SPS thrust. Code 2 indicates RCS. DAP Data Load should be complete before PRO.

G&N RETURN TO EARTH PROGRAM (P37)

NORMAL/BACKUP

STA/T STEP	PROCEDURE		PANEL	REMARKS
CMP	If no alarm, return to step 4			
9	FL V06 N33		2	
	GETI	00XXX. HRS 000XX. MIN 0XX.XX SEC		
	Record data PRO			
10	FL V16 N45 (Maneuver data)			
	Blank			
	TF GETI	XXBXX MIN-SEC		
	MGA	XXX.XX DEG		MGA at TIG if CSM +X axis aligned with initial thrust direction.
	If IMU not aligned R3 00002			
	PRO			External ΔV flag reset at this point.
11	FL V37 Key XXE DSKY - PXX			R00 in Colossus turns off average G (if on) and zeroes rendezvous mark and VHF ranging counters in CMC. It also sets or resets RENDEZVOUS, TRACK and UPDATE flags, depending on which programs are in progress or are called. It may recycle into P20 under certain conditions.

STA/T STEP	PROCEDURE	PANEL	REMARKS
	4.17.2 G&N/SPS DEORBIT THRUSTING (P40)		Purpose: • To compute a preferred CSM attitude and IMU orientation for an SPS thrusting maneuver. • To calculate and display gimbal angles which would result if present IMU orientation is used for thrusting in the preferred vehicle attitude. (The crew then decides whether to thrust at present IMU orientation or to reorient the IMU using P52/P54.) • To maneuver CSM to the thrusting attitude (R60). • To control GNCS during SPS thrust countdown, ignition, thrusting, and thrust termination. • To allow trimming of residual steering errors.
	CMC - on (required), para 4.10.1.2 ISS - on with orientation known (required), para 4.10.1.2 and 4.11 SCS - on (required), para 4.10.2.4		All AUTO RCS SEL switches must be at OFF prior to SCS - on. G&C circuit breakers on all panels should be closed except as defined in Limited Use Controls, para 4.8.4.
	Deorbit & Entry Vehicle Preparation (desired), para 4.16		
CDR	CMC ATT - IMU .05 G sw - OFF	1	
1	Test C/W lamps EMS MODE - STBY EMS FUNC - ΔV SET Set ΔV ind EMS FUNC - ΔV		

STA/T	STEP	PROCEDURE	PANEL	REMARKS
CMP		RCS DAP - load and activate, including ullage selection para 4.10.1.6 & 8	2	Since SPS trim values are used at beginning of P40 for computing preferred IMU orientation and final vehicle attitude, they should be reviewed now. SPS trim values are updated during CMC-controlled burn.
	2	Key V37E 00E DSKY - P00		P00 updates state vector. Time to GETI must be less than 45 min.
	3	Key V37E 40E DSKY - P40		P40 should be preceded by a prethrust program.
		Poss PROG alarm Key V05 N09E (to verify alarm) 00210 (ISS not on) or XXXXX (IMU orientation unknown)		May indicate IMU not on or orientation not known.
		FL V37 Key XXE		RSET and KEY RLSE pressed when nature of problem determined. When CMC regains control, program cycles through R00, which may set or reset REND, TRACK, and UPDATE flags, depending on which programs are in progress or are called.
		(Exit R02)		At this point, using initial thrust direction and SPS gimbal angles, CMC computes preferred IMU orientation at preferred vehicle attitude for CSM position radius vector at TIG, and sets PREFERRED ORIENTATION flag. Final attitude is computed (VEC POINT) in R60 and gimbals trimmed for initial thrust. The 0.5-degree deadband set in RCS DAP, 3-AXIS flag reset at this point, and R60 automatically called.

G&N SPS DEORBIT THRUSTING (P40)

STA/T	STEP	PROCEDURE	PANEL	REMARKS
CMP	4	If VG display desired Key V06 N81E VGX, Y & Z (Lcl vert XXXX.X FPS at GETI)	2	Display is available until average G turned on (GETI minus 30 sec).
		(R60 - Attitude Maneuver)		Maneuvers CSM to a final attitude based on attitude specified and stored in P40 (step 4). The maneuver is performed automatically by the G&N or manually, with an optional final automatic G&N-controlled trim maneuver.
	5	FL V50 N18 (CMC-auto request) R, P, Y XXX.XX DEG		Desired final gimbal angles.
		Establish total attitude display, para 4.9.2.5		Both FDAIs should be selected to provide redundant displays.
CDR		Accept BMAG MODE (3) - RATE 2 CMC attitude control - auto, para 4.9.1.6 PRO	1	Prevents BMAGs from hitting stops during maneuvers. Initiates auto maneuver without reviewing final gimbal angles. If review desired prior to auto maneuver, reject option should be selected. If desired, att set control panel can then be set to final gimbal angles to provide attitude error information for completion of maneuver manually if G&N fails.
		Reject Select desired attitude control mode, para 4.9.1		
CMP		ENTR - Go to step 7	2	
	6	Auto Maneuver V06 N18 (final attitude) R, P, Y XXX.XX DEG		Angles obtained from a VECPOINT calculation. Maneuver rate is as last defined by DAP load.

G&N SPS DEORBIT THRUSTING (P40)

NORMAL/BACKUP

STA/T STEP	PROCEDURE	PANEL	REMARKS
CDR,CMP	Monitor FDAI's If RHC used or SCS selected, go to step 7	1,2	SC began maneuver to final attitude when PRO keyed in step 5. RHC inputs are interpreted as a manual override and CMC will terminate auto maneuver.
CMP 7	FL V50 N18 (att trim enable) R, P, Y XXX.XX DEG	2	Final trim maneuver should be considered essential to SPS ΔV attitudes. Display of final gimbal angles remains in registers. Final attitude trim maneuver performed after gimbal drive and trim check.
	Ignition preparation		Sets up nontime-critical switching required for thrusting. If necessary, MSFN dumps and rewinds tape recorder, and changes to HBR.
LMP	MN BUS TIE (2) - ON	3	Provides 3 batteries on line for deorbit and entry if cbs MNA BAT C and MNB BAT C are closed (panel 275).
	SPS He VLV tb (both) - bp SPS He VLV (both) - AUTO		
CDR	RHC PWR DIRECT (both) - OFF SC CONT - CMC CMC MODE - AUTO SCS TVC (2) - RATE CMD LV/SPS IND SII/SIVB - GPI TVC GMBL DRIVE (2) - AUTO ΔV CG - LM/CSM or CSM	1	
	FCSM (2) - on (up)		Both FCSM and both ΔV THRUST switches are enabled to provide dual-bank operation and maximum redundancy for deorbit burn.
05:00	Gimbal drive and trim check		PITCH and YAW GMBL caution/warning lights (panel 2) indicate only an overcurrent to motors.

STA/T STEP	PROCEDURE	PANEL	REMARKS
CDR	TVC SERVO PWR 1 - AC1/MNA	7	
	TVC SERVO PWR 2 - AC2/MNB		
	TRANS CONTR PWR - on (up)	1	
	RHC PWR NORM 2 - AC		Opens RHC 2 (CDR's) breakout switches (dc) to prevent attitude maneuvers through CMC during MTVC checks.
	RHC 2 - ARMED		During a burn, RCS pitch and yaw channels are disabled 1 second after SPS engine ignition.
	If RATE 1 ΔV planned		RATE 1 ΔV should be used for Lambert steering burns where angular change >15° or if gyro assembly 2 failed.
	BMAG MODE PITCH - RATE 1		
	BMAG MODE YAW - RATE 1		
or	BMAG MODE (in axis) - RATE 1		
	SPS GMBL MOT PITCH 1 - START		START position is momentary. Start motors sequentially at 1-second intervals to avoid electrical overload.
	SPS GMBL MOT YAW 1 - START		
	Auto switchover check		
	THC - CW		Enables MTVC and switches TVC to channel 2.
	RHC - verify no MTVC control		
	SPS GMBL ind (2) - no motion		Verifies TVC control switches from channel 1 to channel 2 (which is off) when THC CW selected.
	Secondary TVC check		
	SPS GMBL MOT PITCH 2 - START		START position is momentary.
	SPS GMBL MOT YAW 2 - START		
	Confirm and set trim control		Verifies secondary gimbal trim control.
	SPS GMBL tw (2) - + and - and set to c.g. trim values		The c.g. trim values can be obtained from DAP Data Load, para 4.10.1.6, or ground.
	RHC 2 - Verify MTVC control		Gimbals drive in response to RHC movement and return to set-in values when RHC neutral. Verifies control of secondary MTVC loops through RHC. Gimbal will move proportional to RHC deflection since MTVC integrator not enabled until engine ignition.

G&N SPS DEORBIT THRUSTING (P40)

NORMAL/BACKUP

STA/T STEP	PROCEDURE	PANEL	REMARKS
CDR	THC - neutral RHC PWR NORM 2 - AC/DC	1	
	Accept Complete auto att trim		Accept and reject options refer to attitude trim enable flash in step 7.
	BMAG MODE (3) - RATE 2 Align SC in roll CMC attitude control - auto, para 4.9.1.6		
CMP	PRO Return to step 6	2	
	Reject Select attitude control desired, para 4.9.1 Verify/maneuver to thrusting attitude (V62E for total att error display) ENTR (exit R60)		
CDR	RHC PWR DIRECT (both) - MNA/MNB	1	Partially enables manual direct RCS for overriding a roll auto RCS failure during thrusting.
	MAN ATT (3) - RATE CMD RATE - HIGH		If MTVC required, RATE - HIGH bypasses noise problem in SCS gyro assemblies due to thrusting vibration levels, which can cause spurious RCS jet firings.
	BMAG MODE (3) - ATT 1 RATE 2 Align GDC to IMU, para 4.10.2.6		DSKY display option is recommended because of its availability - only need to set ATT SET tw to DSKY values and defer alignment until just prior to thrust.
	Check boresight star		

G&N SPS DEORBIT THRUSTING (P40)

STA/T STEP	PROCEDURE	PANEL	REMARKS
CMP 8	FL V50 N25 00204 (CMC GMBL drive test) Accept PRO Monitor GMBL drive sequence 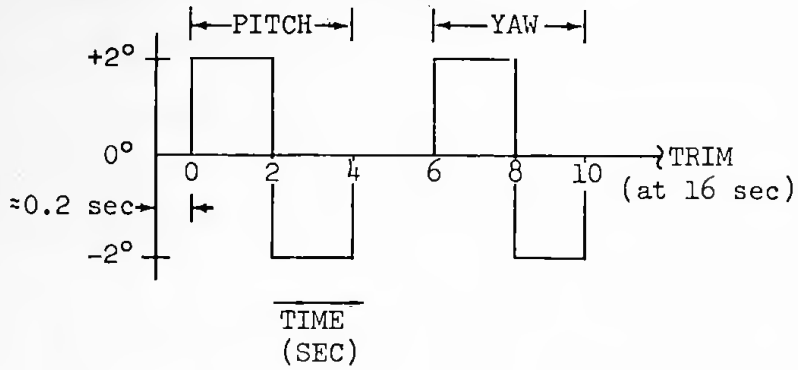 Reject ENTR GMBLs drive to trim position (after 4 sec) Poss FL V05 N09 01703 (TF GETI <45 sec) PRO (slips GETI 45 sec from PRO) or V34 FL V37 Key XXE (desired program)	2	A manual drive, trim and MTVC check is accomplished before CMC gimbal drive test is enabled (PRO keyed). Terminates P40. ROO turns off average G.

G&N SPS DEORBIT THRUSTING (P40)

NORMAL/BACKUP

STA/T	STEP	PROCEDURE	PANEL	REMARKS
CMP	9	V06 N40	2	
		TF GETI XXBXX MIN-SEC		TF GETI max reading is 59 59. Sign is minus before nominal GETI, plus after. Event Timer will not agree with R1 if GETI was slipped.
		VG XXXX.X FPS		
		ΔV (accum) XXXX.X FPS		
CDR	10	2-min countdown		
02:00		Report TTI = 2 min		
		FDAI SCALE - 5/5	1	
		Verify SPS THRUST lt - off		
		ΔV THRUST (2) - NORMAL		
		THC - ARMED		
CDR,CMP		RHC (both) - ARMED		
		(R41 - State Vector Integration)		
00:40				
CMP		If PROG lt - on, CMC has slipped TIG	2	May illuminate between TIG -40 seconds and TIG -35 seconds. Delta amount TIG slipped is as required by CMC to complete state vector integration.
		DSKY R1 continues counting to former TIG		
		DSKY will clear at new TIG -35 sec		
		COMP ACTY lt - off (exit R41)		
00:35		DSKY display clears		
00:30		V06 N40 (avg g on)		Static display, with COMP ACTY lt flash every 2 seconds.
		Check ΔV (accum) for PIPA bias		
00:25		R3 ≤0000.4 FPS		R3 >0.4 fps is excessive PIPA bias; discontinue G&N thrust.

G&N SPS DEORBIT THRUSTING (P40)

STA/T STEP	PROCEDURE	PANEL	REMARKS
LMP	TAPE RCDR FWD - FWD	3	
CDR	EMS MODE - AUTO	1	Selecting AUTO after T -30 seconds prevents error buildup due to accelerometer bias.
00:20 or 00:15	Start 2 jet ullage - THC +X Start 4 jet ullage - THC +X		Retain for ≈1 second after ignition. Exact velocity change is not critical - only a steady ullage to settle SPS propellants.
	xxxxxxxxxxxxxxxxxxxxxxxxxxxx x x No ullage DIRECT ULL pb - push RHC - control attitude x x xxxxxxxxxxxxxxxxxxxxxxxxxxxx		Direct ullage inhibits P&Y auto RCS. Maintain attitude within deadband limits.
CMP 00:05	11 FL V99 N40 (engine enable) TF GETI XXBXX MIN-SEC VG XXXX.X FPS ΔV (accum) XXXX.X FPS Accept PRO Go to step 12 Reject ENTR, go to step 14 Manual trim with RCS or V34E FL V37 Key XXE	2	CMC changes the verb/noun, but retains previous display in registers. ROO turns off average G.

G&N SPS DEORBIT THRUSTING (P40)

NORMAL/BACKUP

STA/T STEP	PROCEDURE	PANEL	REMARKS
00:00 12 Ignition			
CDR	SPS THRUST lt - on	1	
CMP	Poss FL V99 N40 CMC recycles to step 11	2	ΔV monitor in CMC recycles to V99 N40 if thrust not detected in (1) 2-4 seconds from receipt of engine-on bit or (2) 6-8 seconds during normal thrusting. R3 will read 59 59 until reignition.
	V06 N40 TFC XXBXX MIN-SEC VG (decr) XXXX.X FPS ΔV [accum (incr)] XXXX.X FPS ΔV ind - decreasing		Time from engine cutoff. Sign negative before cutoff, positive thereafter.
	xxxxxxxxxxxxxxxxxxxxxxxx x x If no ignition - TBD x x xxxxxxxxxxxxxxxxxxxxxxxx		
IGN+1 sec	Discontinue ullage		
	Poss PROG alarm Key V05 N09E (to verify alarm) 01407 (VG reversed)		
	or 01410 (low ΔV)		ΔV too low for cross product steering.
	FL V37 Key XXE		

G&N SPS DEORBIT THRUSTING (P40)

STA/T	STEP	PROCEDURE	PANEL	REMARKS
		xxxxxxxxxxxxxxxxxxxxxxxxx If premature shutdown Go to step 11 xxxxxxxxxxxxxxxxxxxxxxxxx		
CDR	13	Monitor SPS operation Pc ind - 95-105 psia	1	Green range on indicator is 65 to 125% (corresponds to psia). Normal Pc range is 95-105 psia.
LMP		SPS ENG INJ VLV ind (4) - OPEN SPS He VLV tb (both) - gray SPS PRPLNT TK F & OXID PRESS ind (2) - 170-195 psia	3	All four injector valves open in dual-bank SPS ΔVs. Gray indicates valves open.
CDR		FDAI - monitor errors & rates	1	Monitoring for possibly required MTVC takeover.
		xxxxxxxxxxxxxxxxxxxxxxxxxxxxxxxxxxxxxxxx MTVC takeover THC - CW Monitor automatic rate damping Maintain attitude control manually If no rate damping BMAG MODE (in axis) - RATE 1 ΔV THRUST (2) - OFF xxxxxxxxxxxxxxxxxxxxxxxxxxxxxxxxxxxxxxxx		OFF when rates are dampened.
		xxxxxxxxxxxxxxxxxxxxxxxxxxxxxxxxxxx Roll att control failure MAN ATT ROLL - ACCEL CMD		ACCEL CMD position inhibits CMC roll commands and allows accel control of RCS auto coils with RHC.

G&N SPS DEORBIT THRUSTING (P40)

NORMAL/BACKUP

STA/T STEP	PROCEDURE	PANEL	REMARKS
CDR	or AUTO RCS SEL ROLL (8) - OFF Use direct control	8	
	xxxxxxxxxxxxxxxxxxxxxxxxxxxxxxxxxxxx		
14	Monitor SPS engine cutoff		
CMP	SPS THRUST lt - off	1	
	FL V16 N40 (engine cutoff)	2	
	TFC (static at cutoff) XXBXX MIN-SEC VG XXXX.X FPS ΔV (accum) XXXX.X FPS		Time from cutoff. At cutoff +2.5 seconds, CMC sets wide deadband in RCS DAP. Then CMC switches from TVC DAP to RCS DAP, unless SM RCS was selected in step 10.
CDR	Event Timer = thrust duration	1	
C/O+1 sec	ΔV THRUST (2) - OFF		Set to OFF 1 second after thrust termination (SPS THRUST lt off).
	Report engine off Pc = 0		
LMP	SPS ENG INJ VLV ind (4) - CLOSE	3	
	SPS He VLV tb (both) - bp		Barber pole indicates valves closed.
CDR	SPS GMBL MOT PITCH 2 - OFF	1	Set switches OFF sequentially to avoid power surge. Turning servo 2 off first minimizes switching in logic.
	SPS GMBL MOT YAW 2 - OFF		
	SPS GMBL MOT PITCH 1 - OFF		
	SPS GMBL MOT YAW 1 - OFF		
	SCS TVC SERVO PWR 2 - OFF	7	
	SCS TVC SERVO PWR 1 - OFF		

STA/T STEP	PROCEDURE	PANEL	REMARKS
CDR	EMS MODE - STBY	1	STBY should be selected as soon as possible to minimize accumulation of errors in ΔV readout. Until selected, ΔV ind continues counting because of accelerometer null offset error after thrust termination.
	Record ΔV ind		
	PRO		CMC sets minimum deadband in RCS DAP.
CMP 15	FL V16 N85 (VG vector components) VGX, Y, Z (cont) XXXX.X FPS	2	Velocity to be gained resolved along CSM X, Y, and Z control axes. VG vector is updated each computation cycle.
CDR	If VG component to be nulled RHC/THC - null out VG components THC - neutral, LOCKED		Optional.
CMP 16	If orbital parameter display (R30) desired Key V82E FL V16 N44		R30 displays are automatically updated at 2-second intervals if called because average G is still on.
	Ha XXXX.X NM		Altitude of apogee above launch pad radius (earth orbit), or of apolune above the lunar radius at the most recently defined lunar landing site (lunar orbit)
	Hp XXXX.X NM		Altitude of perigee above launch pad radius (earth orbit), or of perilune above lunar radius at the most recently defined lunar landing site (lunar orbit).

STA/T	STEP	PROCEDURE	PANEL	REMARKS
CMP		TFF XXBXX MIN-SEC	2	Time of free fall to 49.4 NM above launch pad radius (earth orbit) or 5.8 NM above lunar radius at the most recently defined lunar landing site (lunar orbit).
		If Hp >49.4 NM R2 = 59B59		
		PRO (exit R30)		R00 turns off average G.
	17	FL V37 Key XXE (desired program)		
	18	Set controls after tailoff Record burn data		Recorded burn data should include ΔV accomplished.
CDR		FCSM (2) - RESET/OVERRIDE	1	
	19	Call P61		
CMP		Key V37E 61E	2	

G&N SPS DEORBIT THRUSTING (P40)

STA/T	STEP	PROCEDURE	PANEL	REMARKS
		4.17.3 G&N/SM-RCS DEORBIT THRUSTING (P41)		Purpose: To compute a preferred CSM attitude and a preferred IMU orientation for an RCS thrusting maneuver and to maneuver CSM to thrusting attitude (R60).
		CMC - on (required), para 4.10.1.2 ISS - on with orientation known (required), para 4.10.1.2 and 4.11 SCS - on (required), para 4.10.2.2		
CDR		CMC ATT - IMU .05 G sw - OFF	1	
		Deorbit & Entry Vehicle Preparation (desired), para 4.16 Test C/W lts		G&C circuit breakers on all panels are closed except as defined in Limited Use Controls, para 4.8.4.
CMP		Load and Activate DAP, para 4.10.1.6 & 8	2	
	1	Set Event Timer to read 00:00 at GETI	1	
	2	Select P41 Key V37E 41E	2	This program should have been preceded by a prethrusting program.
		Poss PROG alarm Key V05 N09E (to verify alarm) 00210 (ISS not on) or XXXXX (IMU orientation unknown)		May indicate ISS not on or orientation unknown.
		FL V37 Key XXE		When CMC regains control, program cycles through R00, which may set or reset REND, TRACK, and UPDATE flags, depending on which programs are in progress or are called.

STA/T	STEP	PROCEDURE	PANEL	REMARKS
				After R02 is exited, CMC computes initial thrust direction and initial value of VG (local vertical), computes preferred IMU orientation, sets PREFERRED orientation flag, and stores desired attitude for use in R60. The final attitude is computed in R60. The minimum deadband is set in RCS DAP, and 3-AXIS flag is reset at this point.
	3	If VG display desired		
CMP		Key V16 N81E	2	Display is available until average G is turned on (GETI minus 30 sec).
		VGX, Y, Z XXXX.X FPS (Lcl vert at GETI)		
		Key REL		
		(R60 - Attitude Maneuver)		Maneuvers CSM to an attitude specified in P41. Maneuver is performed automatically by G&N, or manually with an optional final automatic G&N controlled trim maneuver.
	4	FL V50 N18 (CMC - auto request)		
		R, P, Y XXX.XX DEG		
		Establish Total Attitude Displays, para 4.9.2.5		Both FDAIs should be selected to provide redundant displays.
CDR		Accept BMAG MODE (3) - RATE 2	1	Prevents BMAGs from hitting stops during maneuvers.
		CMC attitude control - auto, para 4.9.1.6		
CMP		PRO	2	Initiates auto maneuver without a review of final gimbal angles.

G&N SM-RCS DEORBIT THRUSTING (P41)

STA/T	STEP	PROCEDURE	PANEL	REMARKS
CDR		Reject Select Attitude Control desired, para 4.9.1		
CMP		ENTR, go to step 6	2	
	5	Auto maneuver V06 N18 (final attitude) R, P, Y XXX.XX DEG		
CDR,CMP		Monitor FDAIs	1,2	SC began maneuver to final attitude when PRO keyed in step 4. ICDU drives to achieve final gimbal angles. RHC inputs are interpreted as a manual override and CMC will terminate auto maneuver.
		If RHC used or SCS selected, go to step 9		
	6	FL V50 N18 (att trim enable)		This step should be completed ≥30 seconds prior to GETI, or GETI will slip.
		R, P, Y XXX.XX DEG		Display of final gimbal angles in registers.
CDR		Accept BMAG MODE (3) - RATE 2 CMC attitude control - auto, para 4.9.1.6	1	
CMP		PRO, return to step 5	2	
		Reject Select Attitude Control desired, para 4.9.1 Verify maneuver to thrusting attitude (V62E for total att error display)		
CDR		MAN ATT (3) - RATE CMD BMAG MODE (3) - ATT 1 RATE 2 Align GDC to IMU, para 4.10.2.6	1	DSKY display option is recommended because of its availability - only need to set ATT SET tws to DSKY valves and defer alignment until just prior to thrust.

G&N SM-RCS DEORBIT THRUSTING (P41)

NORMAL/BACKUP

STA/T	STEP	PROCEDURE	PANEL	REMARKS
CMP	7	Monitor VG (static) display V06 N85 (VG vector components) VGX, Y, Z (cont) XXXX.X FPS ENTR (exit R60)	2	Components resolved along CSM axes.
-05:00	8	Ignition preparation		Sets up nontime-critical switching required for thrusting.
CDR		Check Boresight Star	1	
		TRANS CONTR PWR - on (up) EMS MODE - STBY EMS FUNC - ΔV SET Set ΔV ind to reqd ΔV EMS FUNC - ΔV		Set to ΔV obtained from charts, in P30 and/or MSFN.
		(R41- State Vector Integration)		
00:40 CMP	9	If PROG alarm, CMC has slipped TIG DSKY R1 continues counting to former TIG DSKY will clear at new TIG -35 sec COMP ACTY lt - off (exit R41)	2	PROG alarm may illuminate between TIG -40 seconds and TIG -35 seconds. Delta amount TIG is slipped will be as required by CMC to complete state vector integration.
00:35		DSKY display clears		
00:30	10	V16 N85 (avg G on) Check ΔV (accum) for PIPA bias		Static display with COMP ACTY lt blinking every 2 seconds.

G&N SM-RCS DEORBIT THRUSTING (P41)

STA/T STEP	PROCEDURE	PANEL	REMARKS
00:25	R3 ≤0000.4		R3 >0.4 fps is excessive PIPA bias error; discontinue G&N thrust.
CDR,CMP	RHC (both) - ARMED		
CDR	THC - ARMED		
	LIM CYCLE - OFF	1	For SCS translations.
	EMS MODE - AUTO		
00:00			
11	RCS Burn		
CMP	FL V16 N85 (requests null VG)	2	Event Timer not valid if GETI slipped. Values are resolved along CSM axes and are identical to those displayed before the maneuver in step 4.
	VGX, Y, Z (cont) XXXX.X FPS		
CDR	Manually null VG		Command manual translations and rotations to null VG components.
12	Burn complete		
CMP	EMS MODE - STBY		
	Record ΔV ind	1	
LMP	TAPE RCDR FWD - FWD	3	
CDR	THC - neutral LOCKED		
13	If orbital parameter display (R30) desired		R30 displays are automatically updated at 2-second intervals if called because average G is still on.
CMP	Key V82E	2	
	FL V16 N44		
	Ha XXXX.X NM		Altitude of apogee above launch pad radius (earth orbit), or of apolune above lunar radius at the most recently defined lunar landing site (lunar orbit).

G&N SM-RCS DEORBIT THRUSTING (P41)

NORMAL/BACKUP

STA/T STEP	PROCEDURE		PANEL	REMARKS
CMP	Hp	XXXX.X NM	2	Altitude of perigee above launch pad radius (earth orbit), or of perilune above lunar radius at the most recently defined lunar landing site (lunar orbit).
	TFF	XXBXX MIN-SEC		Time of free fall to 49.4 NM above launch pad radius (earth orbit) or 5.8 NM above lunar radius at the most recently defined landing site (lunar orbit).
	If HP >49.4 NM R2 = 59B59			
	PRO (exit R30)			ROO turns off average G.
14	FL V37 Key XXE (desired prog)			

G&N SM-RCS DEORBIT THRUSTING (P41)

STA/T	STEP	PROCEDURE	PANEL	REMARKS
	4.17.4	G&N CM RCS DEORBIT THRUSTING		Enter from G&N CM SM separation. Procedure assumes CM in orbit with Hp <70 NM, and G&N operative. Either pitch or yaw jets are used (hybrid deorbit). CM RCS pitch deorbit is feasible because + and - pitch jets are on same side of CM center of mass. Yaw jet deorbit slews CM back and forth across flight path.
		Prerequisites - TBD		
CDR	1	CMC MODE - HOLD RHC - pitch up 10.5° Verify attitude - external visual cues	1	After CM SM separation, P62 normally holds CM with +X 60 degrees above velocity vector (FDAI reads 0 degrees yaw) and +Z in plane of orbit and above velocity vector (FDAI reads 0 degrees roll). Therefore, delta attitude required to arrive at the CM RCS deorbit attitude is 10.5 degrees in pitch.
LMP	2	Select G&N Monitor Program (P47)	2	If P47 desired, call P00 before calling P47.
		Key V37E 47E		Assumes IMU on and aligned.
	3	FL V16 N83 (ΔV components) ΔVX, Y, Z (cont) 0000.0 FPS		Components of acceleration along CM body axes, as measured by the IMU. Registers read zero until thrust begins, then update every 2 seconds.
CDR		MAN ATT PITCH - ACCEL CMD	1	Analysis indicates that this simplifies control in roll and yaw.
CDR,CMP		RHC (both) - ARMED		
	4	Monitor Event Timer RHC 1 - initiate continuous negative pitch		Event Timer was set to count down to 00:00 at TIG when it was determined that CM RCS deorbit would be required.
CDR		RHC 2 - pulse to maintain attitude in 3 axes Monitor FDAI		

G&N CM RCS DEORBIT THRUSTING

NORMAL/BACKUP

STA/T	STEP	PROCEDURE	PANEL	REMARKS
		xxxxxxxxxxxxxxxxxxxxxxxxxxxxxxxxxxxxxxxxxxxx		
		Yaw jet CM RCS deorbit		
CDR		CMC MODE - HOLD (verify)	1	
		RHC - maneuver to 0, 0, 0 (FDAI 1)		+X axis is along velocity vector and +Y axis is in the plane of orbit and pointing toward the earth.
CMP		Key V37E 47E (or verify display P47)	2	
CDR		MAN ATT YAW - ACCEL CMD	1	
		FDAI SCALE - 50/15 50/10		
		RHC 2 - initiate continuous RCS in +yaw		
CMP		RHC 1 - maintain roll, pitch attitude		
CDR		FDAI 1 - monitor until yaw = +30°		
		RHC 2 - oppose yaw until FDAI <+30° yaw		
		FDAI 1 - monitor drift thru 0° yaw and to 330° (-30°) yaw		
		RHC 2 - oppose yaw until >330° (-30°) yaw		
		Continue oscillating CM as required		
		xxxxxxxxxxxxxxxxxxxxxxxxxxxxxxxxxxxxxxxxxxxx		
CMP	5	Monitor R1 for VGX	2	
		Monitor Event Timer for required duration		
CDR	6	Discontinue ΔV	1	
		MAN ATT (3) - RATE CMD		
CMP		PRO	2	

G&N CM RCS DEORBIT THRUSTING

STA/T	STEP	PROCEDURE	PANEL	REMARKS
		(R30 - Orbital Parameter Display)		
CMP	7	Key V82E FL V06 N44 (orbital parameters) Ha XXXX.X NM Hp XXXX.X NM TFF (to 49.4 NM) XXBXX MIN-SEC	2	
		Record data Accept - PRO		Assumes perigee 49.4 NM with resulting exit of R30.
CDR	8	RSI - at desired angle	1	RSI was set at predicted angle prior to entry.
		xxxxxxxxxxxxxxxxxxxxxxxxxxxxxxxxxxxx RSI not at desired angle EMS ROLL - on (up) GDC ALIGN pb - push, hold ATT SET YAW tw - position RSI GDC ALIGN pb - rel EMS ROLL - OFF ATT SET YAW tw - reset GDC ALIGN pb - push If no FDAI response to GDC align Determine angular error Continue procedures utilizing FDAI minus error value xxxxxxxxxxxxxxxxxxxxxxxxxxxxxxxxxxxx		
ALL	9	Do G&N Entry, para 4.17.7		

STA/T	STEP	PROCEDURE	PANEL	REMARKS
	4.17.5	G&N CM/SM SEPARATION		
LMP		MN BUS TIE (2) - on (up)	5	
		cb SECS ARM (2) - close		
		cb SECS LOGIC (2) - close		
		cb ELS (2) - close		
	1	PRIM GLY TO RAD - PULL TO BYPASS	325	
		02 PLSS vlv - ON	326	
		02 SM SUPPLY vlv - OFF	325	
		CAB PRESS RELF (2) - BOOST ENTRY		
		Select Attitude Control Mode, para 4.9.1		
		Maneuver to separation attitude		
LMP		VHF AM (both) - OFF	3	
CMP		SM RCS PRIM PRPLNT tb (4) - gray	2	Gray indicates fuel and oxidizer isolation valves are open.
		SM RCS SEC PRPLNT tb (4) - gray		
		SEC PRPLNT FUEL PRESS (4) - OPEN		OPEN position is momentary.
CDR		SECS LOGIC (both) - on (up)	8	SECS LOGIC and SECS PYRO lever-lock switches provide enabling power for separation events.
		SECS PYRO ARM (2) - on (up)		
		ABRT SYS PRPLNT - RCS CMD		Was set to RCS CMD 42 seconds after lift-off.
CMP		CM/SM SEP (both) - on (up)	2	Guarded. On position is momentary.
		C/W NORM - CM		
CDR		RCS TRNFR - CM		
		CM RCS LOGIC - OFF	1	Should be turned on when on main chutes to power CM PRPLNT DUMP and CM PRPLNT PURGE switches.

STA/T	STEP	PROCEDURE	PANEL	REMARKS
CDR	2	Select Attitude Control Mode, para 4.9.1 Maneuver to entry attitude R ____, R ____, Y ____	1	Entry DAP not turned on.
	3	Set up for CM/RCS sys 1 (omit for CM/RCS deorbit)		G&N entry DAP will function with either one or both CM/RCS systems enabled.
		AUTO RCS SEL A/C ROLL (4) - OFF AUTO RCS SEL CM 1 (6) - MNA or MNB AUTO RCS SEL CM 2 (6) - OFF	8	

STA/T STEP	PROCEDURE	PANEL	REMARKS
	4.17.6 SEPARATION PROGRAM (P61)		The purpose of this procedure is to maneuver CSM to a defined separation attitude, which may be bypassed. Predicted entry interface parameters are displayed and EMS initialization parameters are obtained for comparison with MSFN values.
CMP	1 DSKY - P61 (selected at end of deorbit burn)	2	The following are required CMC - on, para 4.10.1.2 ISS - on and orientation known, para 4.10.1.2 & 4.11 SCS - on, para 4.10.2.2 CMC ATT - IMU .05 G sw - OFF Splashpoint loaded (N61)
	Poss PROG alarm If no FL V05 N09 IMU not on or orientation unknown		
	Poss FL V05 N09 (10 sec) 01427 (IMU reversed)		Zero roll on FDAI is lift-down.
	Poss FL V05 N09 (10 sec) 01426 (IMU unsatisfactory for entry)		+Y-SM not within 30° of V X R
	(R41- State Vector Integration)		
	COMP ACTY lt - flashes every 2 seconds		Indicates state vector integration in process.
	COMP ACTY lt - out (exit R41)		Indicates integration complete.

STA/T	STEP	PROCEDURE		PANEL	REMARKS
CMP	2	FL V06 N61		2	
		Impact Lat (+North)	XXX.XX DEG		Latitude of desired impact point.
		Impact Long (+East)	XXX.XX DEG		Longitude of desired impact point.
		Hds Up/Dn (+up)	+/-00001		Heads up/down defines entry roll attitude.
		Accept PRO			
		Reject V25E, load desired values			Normally, these values would have been loaded prior to deorbit, in P37.
	3	FL V06 N60 (entry data)			
		G max	XXX.XX G		Predicted maximum G level for an entry at nominal bank angle (L/D = 0.18)
		V pred	XXXXX. FPS		Predicted inertial velocity at entry interface (65.8 NM) above Fischer ellipsoid.
		Gamma EI	XXX.XX DEG		Flight path angle (between inertial velocity vector and local horizontal) at 65.8 NM above Fischer ellipsoid.
		Record values			
		PRO			
	4	FL V06 N63			
		RTOGO (.05 G to splash)	XXXX.X NM		Range to go from 46.9 NM (earth orbit) or 49.0 NM (lunar mission) above Fischer ellipsoid to splash. Altitude is preloaded in erasable.
		VIO (at .05 G)	XXXXX. FPS		Predicted inertial V at 46.9 NM (earth orbit) or 49.0 (lunar mission).
		TFE (time from .05 G)	XXBXX MIN-SEC		Time from 46.9 NM (earth orbit) or 49.0 NM (lunar mission).

SEPARATION PROGRAM (P61)

STA/T STEP	PROCEDURE	PANEL	REMARKS
	Record and compare with MSFN		
CDR	EMS MODE - STBY EMS FUNC - RNG SET Set RNG ind for RTOGO EMS FUNC - Vo SET	1	Range to go from 46.9 NM (earth orbit) or 49.0 NM (lunar mission) above Fisher ellipsoid (the preloaded altitude) to splashdown.
	Align scroll Vo to display index (arrow)		Scroll can be slewed only one inch in reverse. After scroll has been slewed one inch past 37K fps point, it is no longer possible to go back to RNG SET and change value in RNG display. This is because RNG SET also initializes range integrator to 37K fps. In Vo SET position, both initial velocity in range integrator and scroll velocity are simultaneously changed. Display index (arrow) is fixed on transparent face of EMS G-V display.
	EMS FUNC - ENTRY		
CMP	PRO	2	3-AXIS flag is set.
	(R60 - Attitude Maneuver)		
5	FL V50 N18 (CMC AUTO request) R, P, Y XXX.XX DEG		Desired final gimbal angles.
CDR	Accept BMAG MODE (3) - RATE 2 CMC Att Cont auto	1	Accept option enables automatic attitude.
CMP	PRO	2	
	Reject Select desired attitude control mode, para 4.9.1 ENTR (exit R60)		Reject option enables manual attitude maneuver or bypass of R60.

SEPARATION PROGRAM (P61)

STA/T	STEP	PROCEDURE	PANEL	REMARKS
CMP	6	V06 N18 (final attitude) R, P, Y XXX.XX DEG	2	Final gimbal angles. Program does not check via DAP to see if maneuver is complete; it waits for crew response before proceeding.
	7	FL V50 N18 (att trim enable) R, P, Y XXX.XX DEG ENTR (exit R60) P61 calls P62		

STA/T STEP	PROCEDURE	PANEL	REMARKS
	4.17.7 G&N ENTRY		The following are required: CMC - on, para 4.10.1.2 ISS - on and orientation known, para 4.10.1.2 & 4.11 SCS - on, para 4.10.2.2 CMC ATT - IMU .05 G sw - off Splashpoint loaded (N61)
CMP	1 P62 Auto select by P61 (bypasses state vector extrapolation reqt)	2	
	or Key V37E 62E (reinitiates average G) DSKY - P62		
	Poss PROG alarm If no FL V05 N09, IMU not on or orientation unknown		
	Poss FL V05 N09 (10 sec) 01427 (IMU reversed)		Zero roll on FDAI is lift-down.
	Poss FL V05 N09 (10 sec) 01426 (IMU unsatisfactory for entry)		+Y-SM not within 30° of V x R
	(R41- State Vector Integration)		This routine is bypassed if P62 has been called by P61.
	COMP ACTY lt - flashing every 2 seconds		Indicates integration in process.
	COMP ACTY lt - out (exit R41)		Indicates integration complete.
	2 FL V50 N25 00041 (request CM/SM separation)		CM SM separation may have been performed prior to this procedure.

STA/T	STEP	PROCEDURE	PANEL	REMARKS
CMP	3	PRO	2	Starts entry DAP.
	4	FL V06 N61		
		Impact lat (+North) XXX.XX DEG		Latitude of desired impact point.
		Impact long (+East) XXX.XX DEG		Longitude of desired impact point.
		Hds up/down (+Hds up) +/-00001		Defines entry roll attitude.
		Accept PRO		
		Reject V25E load new data		
	5	V06 N22 (final attitude)		Display may be bypassed and P63 called if α within 45° of trim for ≥21 seconds.
		R, P, Y XXX.XX DEG		Final gimbal angles at EI.
	6	ORDEAL Pitch - TBD ORDEAL Pitch - TBD		A nominal entry will have IMU inertial attitude on FDAI 1 and ORDEAL local vertical attitude on FDAI 2.
	7	DSKY - P63 (+X-SC within 45° of trim for ≥sec)		If +X-SC within 45° of (-) velocity vector, P63 is automatically called.
CDR	8	After CM/SM separation and stabilization of the CM at the entry attitude		
		EMS MODE - AUTO	1	To prevent EMS accelerometer from sensing acceleration during separation and maneuvers, this switch was left in STBY until after CM/SM separation and CM stabilization.
		ATT DBD - MAX		
		RATE - HIGH		
		FDAI SCALE - 50/15/50/10		
		Align FDAI 2		Roll and yaw should be aligned to IMU as indicated on FDAI 1 and pitch aligned to θ as obtained from R31 (V82E), para 4.6.7.

STA/T	STEP	PROCEDURE		PANEL	REMARKS
CDR		BMAG MODE (3) - RATE 2 MAN ATT ROLL - ACCEL CMD MAN ATT PITCH & YAW - RATE CMD		1	Cages attitude BMAGs, preventing SCS-driven FDAI roll attitude indicator jumping at .05 G when GA 1 attitude BMAGs are automatically caged to furnish rate information for SCS-driven FDAI roll attitude indicator.
CMP	9	V06 N64 (monitor)		2	
		G	XXX.XX G		Acceleration.
		VI	XXXXX. FPS		Inertial velocity (nominal).
		RTOGO to target (+ overshoot)	XXXX.X NM		Range to go to desired splashpoint located at calculated impact time (decreasing).
		Check RTOGO agrees with EMS			
		DSKY - P64 (at .05 G)			CMC changes Entry DAP from att hold in alpha and beta to rate dampening in pitch and yaw (roll unchanged).
		.05 G sw - on (up) EMS ROLL - on (up)			.05 G and EMS ROLL switches should be placed on simultaneously to minimize EMS error.
		.05 G lt - on Scroll slews to left RANGE ind decreases			.05 G lt will not necessarily occur simultaneously with P64 on DSKY but will serve as an additional cue along with an obvious sensing of atmospheric dynamics on rate and error needles.
	10	P64			
		V06 N68 (monitor)			
		Beta	XXX.XX DEG		Commanded bank angle.
		VI	XXXXX. FPS		Inertial velocity (decreasing).
		H Dot	XXXXX. FPS		Rate of altitude change (nominal).
CDR		Compare RSI & ball for lift vector G-V plot within limits		1	

STA/T	STEP	PROCEDURE	PANEL	REMARKS
CMP	11	If DSKY displays P67, go to step 17	1	P64 calls P67 if VI (step 10) < 27K fps. Entry velocities ≥27K fps are possible from RCS deorbit modes.
	12	DSKY displays P65 (Entry Up-Control) Indicates V predicted ≥27K fps and predicted range < 25 NM from desired skipout		Purpose: • Execute entry up-control guidance which steers the CM to a controlled exit (skipout) condition. • Establish entry up-control displays which are used by crew in conjunction with EMS to determine whether backup procedures should be implemented. • To sense exit (drag acceleration less than Q7 FPS2) and thereupon to select the entry-ballistic phase program (P66).
CDR		EMS displays - TBD	1	
CMP	13	FL V16 N69 (computed exit conditions) Beta XXX.XX DEG DL XXX.XX G's VL XXXXX. FPS Record data for later use with EMS PRO FDAI att errors <_____deg rates <_____deg/sec	2	Bank angle (commanded). Drag acceleration at skipout. Velocity at skipout.

STA/T	STEP	PROCEDURE	PANEL	REMARKS
CMP	14	V06 N68 Beta XXX.XX DEG VI XXXXX. FPS HDOT XXXXX. FPS	2	
	15	DSKY displays P66		Automatically selected by P65 when DL < 0.196 G. Purpose: Maintain CM attitude during ballistic (skipout) phase for atmospheric re-entry and to sense re-entry (drag acceleration builds up to Q7 +.05 FPS2 or ≈0.2 G) and thereupon to select P67.
		Check EMS displays - TBD		
	16	V06 N22 (Desired gimbal angles) R, P, Y XXX.XX DEG Check FDAI total attitude = DSKY values FDAI att errors <_____deg rates <_____deg/sec. (Three-axis DAP control was regained when less than .05 G was sensed, and will be relinquished when .05 G is again sensed).		
0.2G	17	DSKY - P67 EMS - 0.2 G (if 10 sec. since .05 G)		P67 continues entry guidance from ≈0.2 G until termination of steering when the CM velocity with respect to earth = 1000 ft/sec (≈10.7 NM altitude).
	18	V06 N66 (monitor) Beta XXX.XX DEG		Commanded bank angle (-command will correct for cross range error).

STA/T	STEP	PROCEDURE		PANEL	REMARKS
CMP		CRSRNG ERR	XXXX.X NM	2	CMC solution for cross range error (+ target south of direction of motion).
		DWNRNG ERR	XXXX.X NM		CMC solution for down range error (decreasing).
CDR		Fly roll cmd Monitor lift vector on RSI & ball		1	
CMP	19	V16 N67 (monitor)		2	
		RTOGO to target	XXXX.X NM		Range to go to target (+ is overshoot).
		Lat (present position)	XXX.XX DEG		Latitude of present position (+ is north).
		Long (present position)	XXX.XX DEG		Longitude of present position (+ is east).
		(V REL = 1000 fps at ≈10.7 NM)			
		IF RTOGO = -, lift-up; +, lift-down			
CDR		Monitor Altimeter		1	
		Earth landing phase at 50K ft			

G&N ENTRY

NORMAL/BACKUP

STA/T	STEP	PROCEDURE	PANEL	REMARKS
		4.18 SCS DEORBIT AND ENTRY		
		4.18.1 SCS/SPS DEORBIT THRUSTING		
		CMC - on (desired), para 4.10.1.2		Necessary for P47 monitor.
		ISS - on and orientation known (desired), para 4.10.1.2		Necessary for P47 monitor.
		Deorbit & Entry Vehicle Preparation (desired), para 4.16		
		SCS - on (required), para 4.10.2.2		All AUTO RCS SEL switches must be at OFF prior to SCS - on. Circuit breakers on all panels should be closed except as defined in Limited Use Controls, para 4.8.4.
CDR		CMC ATT - IMU .05 G sw - OFF	1	
ALL	1	Perform C&WS Operational Check, para 4.7.5.1		
CDR		EMS MODE - STBY EMS FUNC - ΔV SET Set ΔV ind EMS FUNC - ΔV		
CMP	2	Key V37E 00E DSKY - P00	2	Maintains state vector within 9 minutes of present time.
CDR	3	Establish Total Attitude displays, para 4.9.2.5		To obtain telemetry on BMAG attitude error, FDAI SELECT switch must be in 1 or 2 position (with SCS displays).
	4	SCS Attitude Maneuver to thrusting attitude, para 4.10.2.5		
	5	Establish SCS Attitude Hold, para 4.9.1.4 Check boresight star		Low rate, max deadband, and limit cycle should be selected to minimize fuel comsumption.

SCS/SPS DEORBIT THRUSTING

NORMAL/BACKUP

STA/T	STEP	PROCEDURE	PANEL	REMARKS
	6	Ignition Preparation		Sets up the non-time critical switching required for thrusting.
LMP		SPS He VLV tb (both) - bp	3	Barber pole indicates valves are closed.
		SPS He VLV (both) - AUTO		
		MN BUS TIE (2) - on (up)	5	Provides 3 batteries on line for deorbit and entry if cbs MNA BAT C and MNB BAT C are closed (panel 275).
CDR		LV/SPS IND SII/SIVB - GPI	1	
		FCSM (2) - on (up)		
		RHC PWR DIRECT (both) - OFF		
		SCS TVC (2) - AUTO		
		TVC GMBL DRIVE (2) - AUTO		
		ΔV CG - CSM/LM or CSM		
		Establish Ullage Select, para 4.8.1		
CMP	7	If P47 (thrust monitor)		If G&N is operative.
		Key V37E 47E	2	
		DSKY - P47		
		Poss PROG alarm		May indicate ISS not on or orientation unknown.
		Key V05 N09E (to verify alarm)		
		00210 (ISS not on)		
		or XXXXX (IMU orientation unknown)		
		FL V37		When CMC regains control, program cycles through R00, which turns off average G.
		Key XXE		
		FL V16 N83 (ΔV components)		
		ΔVX, Y, Z (cont) XXXX.X FPS		Displayed when average G turned on. CMC required 1.4 seconds (earth orbit) or 2.5 seconds (lunar orbit) per time step to turn on average G. Time step = 240 seconds (earth orbit) or 350 seconds (lunar orbit). Registers read 0000.0 until thrusting maneuver is started, then update every 2 seconds. PIPA bias errors can be monitored until ignition.

SCS/SPS DEORBIT THRUSTING

STA/T STEP	PROCEDURE	PANEL	REMARKS
-05:00			
8	Gimbal drive and trim check		
CDR	SCS TVC SERVO PWR 1 - AC1/MNA	7	PITCH and YAW GMBL caution/warning lights (panel 2) indicate only an overcurrent to motors.
	SCS TVC SERVO PWR 2 - AC2/MNB		
	TRANS CONTR PWR - on (up)	1	
	RHC PWR NORM 2 - AC RHC 2 - ARMED		Opens RHC 2 (commander's) breakout switch dc circuits to prevent loss of attitude reference. Prevents RCS jets from firing when RHC is used for MTVC check. Normally IGN 1 signal disables RCS pitch and yaw channels 1 second after SPS engine ignition.
	Primary TVC Check		
	SPS GMBL MOT PITCH 1 - START SPS GMBL MOT YAW 1 - START		START position is momentary. Start motors sequentially at ≈1 second intervals to avoid electrical overload.
	Confirm trim control on indicators		Gimbals drive in response to thumbwheel movement. Verifies primary gimbal trim control.
	Auto Switchover Check		
	THC - CW RHC 2 - verify no MTVC SPS GMBL ind (2) - no motion		Verifies TVC control switches from channel 1 to channel 2 (which is off) when THC - CW is selected.
	Secondary TVC Check		
	SPS GMBL MOT PITCH 2 - START SPS GMBL MOT YAW 2 - START		START position is momentary.
	Verify trim control		Verifies secondary gimbal trim control.
	Verify MTVC control		Gimbals drive in response to RHC movement, and return to set-in values when RHC is neutral. Verifies control of secondary MTVC loops through RHC.

STA/T STEP	PROCEDURE	PANEL	REMARKS
CDR	THC - neutral SPS GMBL tw (2) - set and confirm final desired gimbal position	1	Gimbals are trimmed in primary channel to thrusting values (SCS modes).
9	RHC PWR DIRECT (both) - MNA/MNB		Partially enables manual direct RCS override of a roll auto RCS failure during thrusting.
	RHC 2 - null att errors		Needles can be used as an error null reference during an MTVC contingency takeover from an automatic ΔV mode.
	ATT DBD - MIN RHC PWR NORM (both) - AC/DC		Set to MIN as errors are nulled.
CMP 10	2-minute countdown		
02:00	Report TTI = 2 minutes	2	
CDR	FDAI SCALE - 5/5	1	
	Verify SPS THRUST lt - off		
	ΔV THRUST (2) - NORMAL		Guarded.
	THC - ARMED		
	LIM CYCLE - OFF		
00:30			
LMP	TAPE RCDR FWD - FWD	3	
CDR	EMS MODE - AUTO	1	Selecting AUTO after T -30 seconds prevents error buildup due to accelerometer bias.
00:20 or 00:15	Start 2-jet ullage Start 4-jet ullage		Exact velocity change is not critical - only a steady ullage to settle SPS propellants.
	xxxxxxxxxxxxxxxxxxxxxxxxxxxxxxxx x x No ullage DIRECT ULL pb - push hold RHC 2 - control attitude x x xxxxxxxxxxxxxxxxxxxxxxxxxxxxxxxx		Direct ullage inhibits pitch and yaw auto RCS control. Attitude should be maintained manually.

SCS/SPS DEORBIT THRUSTING

STA/T STEP	PROCEDURE	PANEL	REMARKS
CDR 11	Ignition		
00:00	THRUST ON pb - push for ignition	1	
	xxxxxxxxxxxxxxxxxxxxxxxxxxxxxx		
	If no ignition		
	SPS THRUST - DIRECT ON		Bypasses FCSM.
	or Terminate maneuver		
	xxxxxxxxxxxxxxxxxxxxxxxxxxxxxx		
	SPS THRUST lt - on		
IGN+1 sec	RATE - HIGH		Bypasses noise problem in SCS gyro assemblies due to thrusting vibration levels and provides backup to auto selection of high rate in pitch and yaw TVC.
	Discontinue ullage		
	xxxxxxxxxxxxxxxxxxxxxxxxxxxxxxxxxxxx		
	Premature shutdown		
	If SPS ROUGH ECO lt - on	2	
	Continue/initiate ullage		
	FCSM SPS A - RESET/OVERRIDE	1	Resets FCSM.
	FCSM SPS A - on (up)		
	FCSM SPS B - RESET/OVERRIDE		
	FCSM SPS B - on (up)		
	Return to step 11		
	or Terminate maneuver		
	xxxxxxxxxxxxxxxxxxxxxxxxxxxxxxxxxxxx		

SCS/SPS DEORBIT THRUSTING

NORMAL/BACKUP

STA/T STEP	PROCEDURE	PANEL	REMARKS
12	Monitor SPS operation		
CDR	LV α/SPS Pc ind - 95-105 psia	1	
LMP	SPS ENG INJ VLV ind (4) - OPEN	3	
	SPS He VLV tb (both) - gray		Gray indicates valves open.
	SPS PRPLNT TK F & OXID PRESS ind (2) - 170-195 psia		
CDR or CMP	FDAI - monitor att error & rates	1,2	
	xxxxxxxxxxxxxxxxxxxxxxxxxxxxxxxxxxxxxxxx		
	MTVC takeover		
	THC - CW		
	Monitor automatic rate damping		
or	Maintain att control manually		
	If no rate damping		
CDR	BMAG MODE (in axis) - RATE 1	1	
	ΔV THRUST (2) - OFF		OFF when rates are damped.
	xxxxxxxxxxxxxxxxxxxxxxxxxxxxxxxxxxxxxxxx		
	xxxxxxxxxxxxxxxxxxxxxxxxxxxxxxxxxx		
	No roll att control		
	MAN ATT ROLL - ACCEL CMD		
	RHC - control roll rates		
or	AUTO RCS SEL (16) - OFF	8	
	Control roll using direct		
	xxxxxxxxxxxxxxxxxxxxxxxxxxxxxxxxxx		

SCS/SPS DEORBIT THRUSTING

STA/T	STEP	PROCEDURE	PANEL	REMARKS
	13	Monitor SPS engine cutoff		
CDR		SPS THRUST lt - off	1	
		ΔV ind - 0		
		Event Timer = thrust duration		
		ΔV THRUST (2) - OFF		This function is time-critical, as it is a backup to the normal SPS thrust cutoff.
		Report engine cutoff Pc = 0		
LMP		SPS ENG INJ VLV ind (4) - CLOSE	3	
		SPS He VLV tb (both) - bp		Barber pole indicates valves closed.
	14	Set controls after tailoff		
CDR		SPS GMBL MOT PITCH 2 - OFF	1	Turning off servo 2 first minimizes switching in the logic. Set GMBL MOT switches OFF sequentially to avoid power surge.
		SPS GMBL MOT YAW 2 - OFF		
		SPS GMBL MOT PITCH 1 - OFF		
		SPS GMBL MOT YAW 1 - OFF		
		EMS MODE - STBY		
CMP		Record ΔV ind		
CDR		SCS TVC SERVO PWR (both) - OFF	7	
		ATT DBD - MAX	1	
		THC - LOCKED		
		FCSM (2) - RESET/OVERRIDE		
		(To re-zero registers, V32E)		Provides capability to monitor another burn without going through R00.
	15	PRO (exit P47)		Key PRO when termination of P47 is desired.
	16	FL V37 Key XXE		

SCS/SPS DEORBIT THRUSTING

NORMAL/BACKUP

STA/T STEP	PROCEDURE	PANEL	REMARKS
	4.18.2 SCS/SM RCS DEORBIT THRUSTING		
	CMC - on (desired), para 4.10.1.2		Provides P47 monitor.
	ISS - on and orientation known (desired), para 4.10.1.2		Provides P47 monitor.
	SCS - on (required), para 4.10.2.2		
	Deorbit & Entry Vehicle Preparation (desired), para 4.16		
CDR	CMC ATT - IMU	1	
	.05 G sw - OFF		
1	Key V37 00E	2	Maintains state vector within 9 minutes of present time.
2	Establish Total Attitude display, para 4.9.2.5		
3	Select attitude control desired, para 4.9.1		
	Maneuver to thrusting attitude		
4	Establish SCS Attitude Hold, para 4.9.1.4		Maximum deadband, low rate and limit cycle are recommended for fuel conservation until prior to thrusting.
-05:00			
5	Check boresight star		
6	For X-axis thrusting		
CDR	EMS MODE - STBY	1	
	EMS FUNC - ΔV SET		
	Set ΔV ind		
	EMS FUNC - ΔV		

STA/T	STEP	PROCEDURE	PANEL	REMARKS
CMP	7	Key V37E 47E (for thrust monitor)	2	If G&N operative. P47 should be called just prior to thrusting and terminated ASAP thereafter to minimize errors of bias and average G. Orbital parameters may be displayed by calling R30.
		Poss PROG alarm Key V05 N09E (to verify alarm) 00210 (ISS not on) or XXXXX (IMU orientation unknown)		May indicate ISS not on or orientation unknown.
		FL V37 Key XXE		When CMC regains control, program cycles through R00 and turns off average G.
	8	FL V16 N83 (ΔV components) ΔVX, Y, Z (cont) XXXX.X FPS		Displayed when average G turned on. CMC requires 1.4 seconds (earth orbit) or 2.5 seconds (lunar orbit) per time step to turn on average G. Time step = 240 seconds (earth orbit) or 350 seconds (lunar orbit). Registers read 0000.0 until thrusting maneuver started, then update every 2 seconds. PIPA bias errors can be monitored until ignition.
-00:30 CDR, CMP	9	RHC (both) - ARMED THC - ARMED		
CDR		ATT DBD - MIN LIM CYCLE - OFF	1	

SCS/SM RCS DEORBIT THRUSTING

NORMAL/BACKUP

STA/T	STEP	PROCEDURE	PANEL	REMARKS
LMP		TAPE RCDR FWD - FWD	3	
CDR		EMS MODE - AUTO	1	
00:00				
	10	RCS burn Manually null VG		
	11	EMS MODE - STBY Record ΔV components EMS FUNC - OFF THC - neutral, LOCKED (To re-zero registers, V32E)		Provides capability to monitor another burn without going through R00.
CMP	12	PRO (exit P47)	2	
	13	FL V37 Key XXE (desired program)		R00 turns off average G.

SCS/SM RCS DEORBIT THRUSTING

STA/T	STEP	PROCEDURE	PANEL	REMARKS
		4.18.3 SCS/CM RCS DEORBIT THRUSTING		Enter from SCS CM/SM separation. Procedure assumes CM in orbit with HP <70 NM, SCS operative, and P47 or EMS set up to monitor a velocity change. Either pitch or yaw jets are used (hybrid deorbit). CM RCS pitch deorbit is feasible because + and - pitch jets are on same side of CM center of mass. Yaw jet deorbit slews CM back and forth across flight path.
CDR	1	RHC 2 - ARMED RHC - Maneuver to R 0°, P 70.5°, Y 0° (Lcl vert) Verify attitude using external visual cues/FDAI (ORDEAL)		Vehicle +X axis should be 70.5° above velocity vector, +Y is 90° from velocity vector (FDAI reads 0° yaw) and +Z in orbital plane above velocity vector (FDAI reads 0° ROLL).
	2	MAN ATT PITCH - ACCEL CMD	1	Analysis indicates that this simplifies control in roll and yaw.
CMP CDR		RHC 1 - ARMED Monitor Event Timer		Timer was set to count down to 00:00 at TIG when it was determined that CM RCS deorbit would be required.
-00:30		EMS MODE - AUTO		
	3	Event Timer - 00:00		
CMP		RHC 1 - initiate continuous negative pitch		
CDR		RHC 2 - pulse plus pitch to maintain attitude (FDAI 1) in 3 axes		
		xxxxxxxxxxxxxxxxxxxxxxxxxxxxxxxxxxxxxxxxxx		
		Yaw jet CM RCS deorbit FDAI SCALE - 50/15 50/10 Set/verify MAN ATT (3) - RATE CMD		Yaw deorbit is used only after loss of a pitch jet and one CM RCS system, or loss of 2 positive or 2 negative pitch jets.

SCS/CM RCS DEORBIT THRUSTING

NORMAL/BACKUP

STA/T STEP	PROCEDURE	PANEL	REMARKS
CDR	RHC - maneuver to R 90°, P 0°, Y 0°		+X axis is along velocity vector. +Y axis is in plane of orbit and pointing toward the earth.
	MAN ATT YAW - ACCEL CMD	1	
	RHC 2 - initiate continuous RCS in +yaw		
	Disregard ΔV ind		EMS accelerometer is in X axis only; ΔV ind for yaw jet CM RCS deorbit will be erroneous.
	If P47, monitor ΔV on DSKY		
CMP	RHC 1 - maintain roll, pitch attitude		
CDR	FDAI 1 - monitor RCS firing until yaw = +30°		
	RHC 2 - oppose yaw until FDAI <+30° yaw		
	FDAI 1 - monitor drift through 0° yaw to 330° (-30°) yaw		
	RHC 2 - oppose yaw until FDAI >330° (-30°) yaw		
	Continue oscillating CM as required		
	xxxxxxxxxxxxxxxxxxxxxxxxxxxxxxxxxxxxxxxxx		
4	Monitor ΔV ind for required value		Time or ΔV provides cue to discontinue RCS ΔV (pure or hybrid).
or	Monitor Event Timer - required duration		
5	Terminate CM RCS deorbit burn MAN ATT (3) - RATE CMD or ACCEL CMD Proceed to SCS Entry, para 4.18.5		

SCS/CM RCS DEORBIT THRUSTING

STA/T	STEP	PROCEDURE	PANEL	REMARKS
		4.18.4 SCS CM/SM SEPARATION		
		MN BUS TIE (2) - on (up)		
		cb SECS ARM (2) - close		
		cb SECS LOGIC (2) - close		
		cb ELS (2) - close		
CDR	1	PRIM GLY TO RAD - PULL TO BYPASS	325	
		02 PLSS vlv - ON	326	
		02 SM SUPPLY vlv - OFF		
		CAB PRESS REL (2) - BOOST ENTRY (safety latch off)	325	
	2	Select Attitude Control Mode, para 4.9.1		
	3	Maneuver to separation attitude		
LMP	4	VHF AM (2) - off (center)	3	
CMP		SM RCS PRIM PRPLNT tb (4) - gray	2	Gray indicates fuel and oxidizer isolation valves are open.
		SM RCS SEC PRPLNT tb (4) - gray		
		SEC PRPLNT FUEL PRESS (4) - OPEN		OPEN position is momentary.
CDR		SECS LOGIC (both) - on (up)	8	SECS LOGIC and SECS PYRO lever-lock switches provide enabling power for separation events.
		SECS PYRO ARM (2) - on (up)		
CMP		ABRT SYS PRPLNT - RCS CMD	2	Was set to RCS CMD 42 seconds after lift-off.
		CM/SM SEP (both) - on (up)		Guarded. On position is momentary.

STA/T	STEP	PROCEDURE	PANEL	REMARKS
CMP		C/W CSM - CM RCS TRNFR - CM	2	Backup to automatic RCS transfer.
CDR		CM RCS LOGIC - OFF	1	Should be turned on when on main chutes to power CM PRPLNT DUMP and CM PRPLNT PURGE switches.
	5	Select Attitude Control Mode, para 4.9.1 Maneuver to Entry Attitude R ____, P ____, Y ____		
	6	Set up for CM/RCS sys 1 (omit for CM/RCS deorbit) AUTO RCS SEL A/C ROLL (4) - OFF AUTO RCS SEL CM 1 (6) - MNA or MNB AUTO RCS SEL CM 2 (6) - OFF	8	

STA/T	STEP	PROCEDURE	PANEL	REMARKS
	4.18.5	SCS ENTRY		Assumes CM/SM separation has occurred and CM is at entry attitude.
		CMC - on (desired), para 4.10.1.2 ISS - on and orientation known (desired), para 4.10.1.2 SCS - on (required), para 4.10.2.2 CMC ATT - IMU .05 G sw - OFF RSI aligned, para 4.9.6.3		
	1	Maneuver SC to entry attitude EMS Deorbit and Entry Test (required), para 4.16.2		
CDR	2	EMS FUNC - RNG SET	1	The following steps to be done as soon as possible after deorbit ΔV.
		Set RANGE ind - range to go after .05 G		Range-to-go specified by ground and/or CMC.
	3	EMS FUNC - Vo SET Align scroll Vo to display index		Vo = initial velocity. Scroll can be slewed only one inch in reverse. After scroll has been slewed one inch past 37K fps point, it is no longer possible to go back to RNG SET and change value in RANGE/ΔV display. This is because RNG SET also initializes range integrator to 37K fps. In Vo SET position, both initial velocity in range integrator and scroll velocity are simultaneously changed.
	4	EMS FUNC - ENTRY		
	5	Align RSI to desired angle (if necessary)		This alignment may be performed prior to launch or prior to deorbit.

STA/T STEP	PROCEDURE	PANEL	REMARKS
CDR	ATT SET - GDC EMS ROLL - on (up) GDC ALIGN pb - push, hold ATT SET YAW tw - position RSI	1	RSI alignment at this point provides indication of backup bank angle (BBA).
	GDC ALIGN pb - rel EMS ROLL - OFF ATT SET YAW tw - reset GDC ALIGN pb - push (32 sec max)		
6	After CM SM separation and stabilization of the CM at the entry attitude EMS MODE - AUTO		To prevent EMS accelerometer from sensing accelerations during separation and maneuvers, this switch was left in STBY until after CM SM separation and CM stabilization.
	ATT DBD - MAX RATE - HIGH FDAI SCALE - 50/15/50/10 BMAG MODE (3) - RATE 2 MAN ATT ROLL - ACCEL CMD MAN ATT PITCH & YAW - RATE CMD		Cages attitude BMAGs, preventing SCS-driven FDAI roll attitude indicator jumping at .05 G when GA 1 attitude BMAGs are automatically caged to furnish rate information for SCS-driven FDAI roll attitude indicator.
7	Event Timer - monitor for .05 G time .05 G lt - on .05 G sw - on (up) EMS ROLL - on (up) Scroll slews to left RANGE ind - decreases		.05 G and EMS ROLL switches should be placed on simultaneously to minimize EMS error.

STA/T STEP	PROCEDURE	PANEL	REMARKS
CDR	Maneuver to BBA and maintain until range potential guidelines can be interpreted, then null range error using range potential guidelines and EMS RTOGO counter. While nulling range errors, avoid tangency to the G on-set lines. Reverse bank angle at RETRB to null lateral range error.		BBA = Backup bank angle. Disregard corridor lamps (as corridor verification cues) for entry for earth orbit (entry velocity < 35K fps). RETRB is retrofire elapsed time to reverse bank.

STA/T STEP	PROCEDURE	PANEL	REMARKS
	4.19 EARTH LANDING PHASE (<50K')		
CDR 50K'	ELS LOGIC - on (up)	1	Guarded.
	ELS AUTO - on (up)		
	Report CM stable		
	xxxxxxxxxxxxxxxxxxxxxxxxxxxxxxxxxx		
	CM unstable		
CMP	RCS CMD - OFF	2	OFF position is momentary.
CDR 45K'	APEX COVER JETT pb - push	1	Guarded.
	DROG DPLY pb - push		Guarded.
	(2 sec after apex cover jett)		
	xxxxxxxxxxxxxxxxxxxxxxxxxxxxxxxxxx		
CMP	SEC COOL LOOP EVAP - off (center)	2	Required only if secondary loop is in operation.
	GLY EVAP H20 FLOW - off (center)		
24K'	Apex cover jett (auto)	1	The apex cover will be jettisoned at 24K feet plus 0.4 sec.
	xxxxxxxxxxxxxxxxxxxxxxxxxxxxxx		
CDR	APEX COVER JETT pb - push		Guarded.
	xxxxxxxxxxxxxxxxxxxxxxxxxxxxxx		
	Drogue parachutes deployed (auto)		Drogue parachutes deployed at 24K feet plus 2.0 sec. The CM may be very unstable until the drogue chutes disreef in approximately 9 seconds.
	xxxxxxxxxxxxxxxxxxxxxxxx		
	DROG DPLY pb - push		Guarded.
	xxxxxxxxxxxxxxxxxxxxxxxx		

NORMAL/BACKUP

STA/T STEP	PROCEDURE	PANEL	REMARKS
CMP 23.5K'	Monitor CAB PRESS ind - starts increase	2	No increase indicates cabin pressure relief valve failure.
	xxxxxxxxxxxxxxxxxxxxxxxxxxxxxx x x		
CDR	If no increase by 17K' CAB PRESS RELF (RH) - DUMP (safety latch off)	325	RH valve has four positions.
	x x xxxxxxxxxxxxxxxxxxxxxxxxxxxxx		
10K'	Main parachutes and VHF recovery antenna deploy (auto)		Auto deployment occurs between 10,950 and 9,100 feet. Parachutes disreef in approximately 15 seconds after pilot mortars fire.
	MAIN DPLY pb - push (within 1 sec)	1	Guarded. MAIN DPLY pushbutton should be pushed within one second after pilot mortars fire to insure simultaneous deployment of main parachutes.
CMP	SEC COOL LOOP EVAP - RESET for 45 sec, then off (center)	2	Required only if secondary loop is in operation.
	GLY EVAP STM PRESS AUTO - MAN		
	GLY EVAP STM PRESS INCR - INCR for 45 sec min		INCR position is momentary.
	Set up entry communications		
LMP	VHF ANT -RECY	3	
	VHF AM (2) - SIMPLEX		
	VHF BCN - ON		
	Transmit voice (VHF AM) reporting Position Main chutes disreefed Splash error Crew status		Continue voice transmission until touch down. If contact is established on one frequency, turn the other VHF AM switch off.

EARTH LANDING PHASE (< 50K')

STA/T STEP	PROCEDURE	PANEL	REMARKS
CMP	PRO FL V50 N07 (change of program) V37E 00E	2	Calls P00 (CMC idling program) for power conservation.
CDR	DIRECT 02 vlv - OPEN (CCW)	7	
	CM RCS LOGIC - on (up)	1	Must be on to power CM PRPLNT DUMP switch.
	CAUTION CM PRPLNT DUMP should be initiated immediately after main chute disreefing.		
	CM PRPLNT DUMP - on (up) (Dump burn is audible)		Guarded.
CMP	RCS IND sel - CM 1 CM RCS PRESS He ind - decreasing	2	
	xxxxxxxxxxxxxxxxxxxxxxxxxxxxxxxxxxxx RCS IND sel - CM 2 CM RCS He PRESS ind - decreasing If not decreasing or RCS jets not firing		
CDR, CMP	RHC (2) - fire all RCS jets (except plus pitch) until propellants are depleted xxxxxxxxxxxxxxxxxxxxxxxxxxxxxxxxxxxx		One RHC is positioned to command plus yaw and roll (excluding plus pitch) and the other RHC positioned to command minus yaw, pitch, and roll.

EARTH LANDING PHASE (< 50K')

NORMAL/BACKUP

STA/T STEP	PROCEDURE	PANEL	REMARKS
	When propellant dump burn completed		
CDR	CM PRPLNT PURG - on (up) (purge is audible)	1	Guarded. Both the CM RCS LOGIC and CM PRPLNT DUMP switches must be on (up) to power the PURG switch.
	xxxxxxxxxxxxxxxxxxxxxxxxxxxxxxxx		
CDR, CMP	CM RCS He DUMP pb - push		Guarded. The CM RCS He DUMP pushbutton should be used to initiate purge following a normal dump operation if CM PRPLNT PURG switch fails to initiate purge.
	If RHC (2) used for propellant dump burn:		
	RHC (2) - Fire all jets (except plus pitch)		One RHC is positioned to command plus yaw and roll (excluding plus pitch) and the other RHC is positioned to command minus yaw, pitch and roll.
	xxxxxxxxxxxxxxxxxxxxxxxxxxxxxxxx		
LMP	cb FLT/PL BAT BUS A, B & BAT C (3) - close	275	
	cb FLT/PL MNA - open		
	cb FLT/PL MNB - open		
	cb ECS RAD HTRS OVLD (2) - open	5	
CDR	cb SPS PITCH (2) - open	8	
	cb SPS YAW (2) - open		
3K'	CAB PRESS RELF (RH) - DUMP (safety latch off)	325	Assures minimum cabin-to-ambient negative P for landing impact.
	FLOOD FIXED - POST LDG	8	Provides power from the flight and postlanding bus to one floodlight in the LH couch area and one floodlight in the center couch area.

EARTH LANDING PHASE (<50K')

STA/T STEP	PROCEDURE	PANEL	REMARKS
CDR	FLOOD DIM - 1 or 2	8	Position 1 provides power to two secondary floodlights and position 2 provides power to two primary floodlights when the FLOOD FIXED switch is in the POST LDG position after the d-c main buses are deactivated.
800'	CAB PRESS RELF (2) - CLOSE (safety latch off)	325	Valves must be closed prior to touchdown to prevent water from entering CM.
CMP >600'	CM RCS PRPLNT (both) - OFF CM RCS PRPLNT tb (both) - bp	2	Barber pole indicates at least one valve closed in each system.
LMP	MN BUS TIE (2) - OFF	5	
	CAUTION MN BUS TIE switches must be left in the OFF position to insure that batteries A, B, and C are used to power the postlanding bus only, and to prevent battery shorting caused by water entering the CM feed-through connectors.		
	Postlanding Check, para 4.20		

EARTH LANDING PHASE (<50K')

NORMAL/BACKUP

STA/T	STEP	PROCEDURE	PANEL	REMARKS
	4.20	POSTLANDING		
	4.20.1	POSTLANDING STABILIZATION		
		WARNING If CM O2 supply is exhausted at impact, helmets must be removed within one minute or asphyxiation may result.		
ALL		Remove helmets		
CDR		DIRECT O2 vlv - close (CW)	7	Conserve remaining oxygen and enable use of drinking water gun.
CMP		ELS AUTO - on (up) (verify)	1	Switch should have been on at least 14 seconds to allow timer to time out and enable MAIN REL switch.
LMP		cb MN REL PYRO (2) - closed	229	
CMP		MN REL - on (up)	2	Guarded. On position is momentary. Releases main parachutes.
CDR		SECS PYRO ARM (2) - SAFE	8	Lever lock.
		SECS LOGIC (both) - OFF		Lever lock.
LMP		cb BAT RLY BUS (2) - open	5	
		VHF AM (3) - RCV	9,10,6	Unless in contact with recovery forces.
CDR		cb PL VENT FLT/PL - close	8	
		cb FLOAT BAG (all) - close		
		If floating upright		
		CAUTION Wait 10 minutes prior to initiating bag fill. This allows the ablator to cool sufficiently prior to inflation. Heat can destroy bags.		

NORMAL/BACKUP

STA/T STEP	PROCEDURE	PANEL	REMARKS
CDR	FLOAT BAG (all) - FILL then OFF after 7 minutes	8	Lever lock. Wait 15 minutes prior to running compressors again.
	xxxxxxxxxxxxxxxxxxxxxxxxxxxxxxxxxxxxxxxx		
	Floating inverted		
	FLOAT BAG (all) - FILL		Lever lock.
LMP	VHF BCN - OFF	3	
	VHF AM (2) - off (center)		
	Two min after upright		
CDR	FLOAT BAG (all) - OFF	8	Lever lock.
LMP	VHF BCN - ON	3	
	VHF AM (2) - SIMPLEX		If contact is not made on one frequency, turn other VHF AM switch off.
	If CM fails to upright in 7 minutes and		
	CM rolls CW		
CDR	FLOAT BAG 2 - OFF	8	
	(Continue uprighting for 8 additional minutes), or		
	CM rolls CCW		
	FLOAT BAG 1 - OFF		
	(Continue uprighting for 8 additional minutes), or		
	No roll		
	FLOAT BAG 3 - OFF		
	(Continue uprighting for 8 additional minutes)		

STA/T	STEP	PROCEDURE	PANEL	REMARKS
		WARNING		
		If CM still does not upright, prepare to egress within 15 minutes (because of environmental conditions) after completing above uprighting procedure. Refer to Stable II Water Egress procedure, para 4.20.4.2		
		xxxxxxxxxxxxxxxxxxxxxxxxxxxxxxxxxxxxxx		
	4.20.2	POST STABILIZATION AND VENTILATION		
ALL		Release footstraps		
		Release restraint harness		
LMP		cb MNA BAT BUS A & BAT C (2) - open	275	
		cb MNB BAT BUS B & BAT C (2) - open		
		cb FLT/PL BAT C - open		Battery C held in reserve for use after depletion of battery A and B charge.
		cb PYRO A SEQ A - open	250	
		cb PYRO B SEQ B - open		
		DC IND sel - BAT BUS A,B	3	
		DC VOLTS ind - >27.5 vdc		
		xxxxxxxxxxxxxxxxxxxxxxxxxxxxxxxxxxxxxx		
		If BAT BUS A (B) <27.5 vdc		
		cb FLT/PL BAT BUS A (B) - open	275	
		Refer to Communications Low Power procedures, para 4.20.3.3		

STA/T STEP	PROCEDURE	PANEL	REMARKS
	If BAT BUS A & B (2) <27.5 vdc		
LMP	cb FLT/PL BAT BUS A & B (2) - open	275	
	cb FLT/PL BAT C - close		
	Refer to Communications Low Power procedures, para 4.20.3.3 and monitor BAT C voltage		
	xxxxxxxxxxxxxxxxxxxxxxxxxxxxxxxxxxxx		
CMP	PLV distribution duct (3) - unstow and install		Stowed in volume A1.
	PL VENT VLV UNLOCK - PULL	2	
CDR	PL VENT - HIGH	15	PLV fan can operate in high flow for 12 hours (max). During periods of no PLV fan operation, cycle PLV 5 min every half hour. If RCS fumes are noticed, prepare to egress immediately.
	xxxxxxxxxxxxxxxxxxxxxx		
	If no PLV operation		
	to open valves		
	PLVC - OPEN	376	Prepare to egress CM in 30 min if valves cannot be opened.
	to close valves		
	PLVC - NORMAL		
	xxxxxxxxxxxxxxxxxxxxxx		
	PL BCN LT - BCN LT LO	15	After dark only. Place light in HI only at request of recovery forces.
	Deploy dye marker (if required)		
	PL DYE MARKER - on (up)		Guarded.

POSTLANDING

STA/T	STEP	PROCEDURE	PANEL	REMARKS
CDR		Deploy line grappling hook (if required)		Grappling hook is deployed at request of recovery forces. It is stowed in volume A8 under RH couch and is for snagging sea anchors deployed by recovery forces. Adapter E and driver R tools are required to remove pressure equalization valve and secure cover plate on unified hatch (over valve opening).
		Unified hatch press equal vlv - remove		
		Grappling hook and line - deploy through valve opening		
		Cover plate - secure		
		Desalt drinking water (if required)		15 lbs of potable water in the survival kit is available for drinking and food reconstitution purposes. The desalting kit and sea water pump are used thereafter.
		Sea water pump - snake pump hose through steam line vent boss into the sea		Sea water pump is stowed in volume A8 under RH couch.
	4.20.3	POSTLANDING COMMUNICATIONS		
	4.20.3.1	Normal Postlanding Communications		
LMP		VHF BCN - ON (verify)	3	
		VHF ANT - RECY (verify)		Use backup procedure if there is no contact with recovery forces after splashdown.
		xxxxxxxxxxxxxxxxxxxxxxxxxxxxxxxxxxxxxxx		
		If no contact with recovery forces		
		Remove survival transceiver from stowage and mount antenna		The government-furnished survival transceiver is stowed in volume R4 of LEB.
		Select VOICE on transceiver		
		Monitor VHF beacon for 1000 Hz tone (2 sec on, 3 sec off)		
		If VHF beacon operating		
		Turn off survival transceiver		
		Stow transceiver in LEB		
		xxxxxxxxxxxxxxxxxxxxxxxxxxxxxxxxxxxxxxx		

NORMAL/BACKUP

STA/T	STEP	PROCEDURE	PANEL	REMARKS
	4.20.3.2	Survival Transceiver Communications		
LMP		VHF BCN - OFF (if no contact after 24 hours)	3	The VHF BCN switch should be turned OFF after 24 hours of beacon operation, if there is no contact with recovery forces.
		Survival transceiver - Connect to VHF BCN antenna cable		
		Remove survival transceiver from stowage		Transceiver is stowed in volume R4 of LEB.
		Unlatch and open VHF antenna access door		A 5/32" hex wrench for opening two hex screws on antenna cable access door is located in volume A1 of LEB.
		Break P112 safety wire on VHF recovery beacon coax connector		Surgical scissors from crewman's pocket can be used to break safety wire on coax connector.
		Disconnect P112 connector from beacon		An adjustable wrench from volume A1 of LEB is used to loosen 5/8" hex on coax connector.
		Attach transceiver cable P1 connector to transceiver (verify)		
		Connect transceiver cable J1 connector to P112 connector		
		Select BCN on transceiver		
	4.20.3.3	Communications Low Power Procedures		
		VHF BCN - OFF		
CDR		FLOOD FIXED - OFF	8	Turns off postlanding floodlights.
LMP		VHF AM (2) - off (center)	3	
		VHF AM RCV ONLY - A		
CDR		PL vent sys - minimize use		

STA/T	STEP	PROCEDURE	PANEL	REMARKS
CDR		Survival transceiver - connect to VHF BCN antenna cable. (Refer to Survival Transceiver Communications, para 4.20.3.2.)		
		4.20.4 EGRESS PROCEDURES		
		4.20.4.1 <u>Stable I Water Egress Procedure</u>		
LMP		cb BAT A,B,C ENTRY/PL PWR (3) - open	250	
ALL		PWR (3) - OFF	9,10,6	
		SUIT PWR (3) - OFF		
		Disconnect umbilicals		
		Neck dams on		
CMP		Center couch - 264° position		
CDR,LMP		Armrests removed		
ALL		Connect raft yellow lanyard No. 1 to water and hardware rucksack		
CDR		Connect raft white lanyards to suits		
		Connect raft to CM, if desired, with green lanyard		
CMP		Open unified hatch		
		Lock pin rel knob - UNLOCK		
		Gear box sel - UNLATCH		
		Actr handle sel - U (unlatch)		
		Actr handle rel - push or squeeze		Pushbutton or squeeze bar releases actuator handle for operation.
		Actr handle - operate (until hatch can be opened)		
		Push hatch open		

POSTLANDING

NORMAL/BACKUP

STA/T	STEP	PROCEDURE	PANEL	REMARKS
		xxxxxxxxxxxxxxxxxxxxxxxxxxxxxx		
CMP		If hatch does not open GN2 charge knob 2 - CW GN2 vlv handle - unlock and push (outboard)		
		xxxxxxxxxxxxxxxxxxxxxxxxxxxxxx		
		Egress with liferaft and inflate water wings		
ALL		Put hardware kit out		
LMP		Egress and inflate water wings		
CDR		Egress and inflate water wings		
	4.20.4.2	Stable II Water Egress Procedure		
LMP		cb CREW AUDIO (3) - open	225	
ALL		PWR (3) - OFF	9,10,6	
		SUIT PWR (3) - OFF		
		Disconnect umbilicals		
		Couch seat pans (3) - 170° position		
		Neck dams on		
CMP		Arm rests removed and stowed		
LMP		Survival kits removed from stowage		
CDR		Connect liferaft mainline to CDR or CM		
CMP		Connect first white lanyard from liferaft to suit		
LMP		Connect second white lanyard from liferaft to suit		
CDR		Connect third white lanyard from liferaft to suit		
LMP		Connect rucksacks together to yellow lanyard on raft bag		

STA/T STEP	PROCEDURE	PANEL	REMARKS
CMP	PRESS EQUAL VLV - OPEN	tunl	Valve located on combined hatch. Pull detent knob on end of handle, then pivot up 90° to form crank. Rotate crank approx 3 turns CCW to fully open valve. This will flood the tunnel prior to opening the hatch.
	WARNING To prevent injury to crew member do not unlock hatch until flooding stops and pressure equalizes in CM.		
	Actr handle rel - PULL & ROTATE		To free actuator handle for operation, release is rotated to mechanical stop.
	Actr handle - pull to stop		Actuator handle should move about 80°.
	Actr handle sel - U (unlatch) (CCW 90°)		
	Actr handle - push to stop		Actuator handle should move about 60° to release hatch.
	Actr handle sel - STOW (CW 90°)		
	Actr handle - push to stowed position		
CMP,LMP	Remove and stow combined hatch		Combined hatch weighs about 85 lbs and is stowed in the LHEB.
CMP	Exit feet first with raft; when clear of CM inflate water wings and raft		
LMP	Put rucksacks down tunnel after CMP Exit feet first; when clear of CM inflate water wings		
CDR	Exit feet first; when clear of CM inflate water wings		

POSTLANDING

NORMAL/BACKUP

STA/T STEP	PROCEDURE	PANEL	REMARKS
	4.21 MISSION TEST REQUIREMENTS		
	4.21.1 (TBD)		

STA/T STEP	PROCEDURE	PANEL	REMARKS

SECTION 5
CONTINGENCY PROCEDURES

INTRODUCTION

Contingency procedures consist of operational and trajectory analysis for situations other than normal that may occur during all mission phases. This will provide the crew with decision-making guidance as to aborting the mission, selecting and implementing an alternate mission, or continuing the mission under degraded conditions. The procedures include the corrective action that must be taken and the limitations that may be imposed. Contingency Procedures consist of the following:

- Abort procedures. These procedures may be considered as a specialized form of backup procedures which involve early mission termination.
- Malfunction procedures. These procedures encompass the recognition, diagnosis, and corrective action for system malfunctions.
- Emergency procedures. These procedures are another form of backup procedures where safety of the flight crew requires instant action (other than an abort).

STA/T STEP	PROCEDURE	PANEL	REMARKS

5.1 ABORT PROCEDURES

During the ascent phase, an abort can be accomplished in an LES or SPS mode. An abort in the LES mode is accomplished by utilizing the launch escape system, which has solid propellant motors mounted on a tower above the command module. During a normal mission, the launch escape tower is jettisoned approximately 35 seconds after second-stage booster ignition. After the launch escape tower is jettisoned, an abort can be accomplished in the SPS mode by utilizing the service propulsion engine in the service module.

5.1.1 LES ABORT MODES

An abort may be initiated automatically by the emergency detection system (EDS) when two L/V engines fail, L/V excessive rates detected, breakup between IU and CM, or manually when the commander's translation control is rotated to the full CCW position. Upon receipt of an abort signal, regardless of its source, the booster is cut off (if after T + 40 seconds), the CM is separated from the SM, and simultaneous ignition of the launch escape and pitch control motors takes place. Firing of the pitch control motor is inhibited 42 seconds after lift-off. Cutoff of the booster engines is inhibited for the first 40 seconds after lift-off by circuitry in IU because of range safety restrictions. The LES motors provide thrust to propel the command module away from the launch pad or trajectory of the launch vehicle.

Certain events that occur during an abort are controlled automatically by controllers in the sequential events control system (SECS). The earth landing sequence controller (ELSC) contains high-altitude and low-altitude baroswitches. The opening of these baroswitches inhibit ELS operations and the closing initiates the operations. The high-altitude baroswitch controls automatic LES tower jettison, apex cover jettison, and drogue parachute mortar fire. The high-altitude baroswitch is designed to open at 38,500 feet and close at 24,000 feet. Because of venting lag, the high-altitude baroswitch will not open until 40,500 feet during ascent. On an abort initiated under 30,000 feet (low part of abort mode I-B), the 24K feet baroswitch will remain closed and allow automatic LES tower jettison, apex cover jettison, and drogue parachute and main parachute deployment on a

STA/T STEP	PROCEDURE	PANEL	REMARKS

timed sequence controlled by time-delay relays. On an abort initiated between 30,000 feet and 3 minutes 14 seconds, automatic LES tower jettison, apex cover jettison, and drogue parachute deployment are delayed until the command module descends to the closing altitude of the high-altitude baroswitch (24,900 to 21,500 feet). The low-altitude (10K') baroswitch is closed at 10,000 feet, open at 18,000 feet. Opening of the low-altitude baroswitch will delay automatic deployment of the pilot-main parachutes until the command module descends to the closing altitude (10,950 to 9100 feet).

The LES abort is divided into three different modes as follows:

- Mode 1-A (launch pad to 42 seconds)
- Mode 1-B (42 seconds to 1 minute 50 seconds)
- Mode 1-C (1 minute 50 seconds to LES tower jettison)

During a Mode 1-A abort, the RCS oxidizer will be automatically dumped overboard through a hole in the aft heat shield. The RCS fuel will be automatically dumped through another hole in the aft heat shield 5 seconds after oxidizer dump started. The oxidizer dump time is approximately 11 seconds. Helium dump is automatically initiated 13 seconds after fuel dump initiation. During a Mode 1-B or Mode 1-C abort, the CM RCS propellants are burned through 10 RCS engines after the main parachutes disreef, and then the system is purged. The two engines out and LV rates auto abort capability is switched off prior to S-1C/S-II staging, and the crew must be ready to manually initiate an abort if these conditions arise. During a Mode 1-C abort (over 100K'), it is possible to jettison the LET and accomplish a normal entry provided certain conditions prevail. There must be sufficient TFF (100 sec) to perform the entry maneuver, a reliable attitude reference, and launch escape vehicle (LEV) rates must be within tolerance. If any of these conditions are not met, the LET must be retained to insure capture of the LEV with the heat shield oriented forward. The altitude and velocity of the LEV is such that a possibility exists that it could enter the atmosphere canard and escape tower forward. The LEV would remain in this condition until descending below 100,000 feet and Mach 3.8. At this time a fast turnaround would occur which would be detrimental

LES ABORT MODES

STA/T STEP	PROCEDURE	PANEL	REMARKS

to crew safety. The crew will prevent canard forward capture by manual intervention shortly after abort initiation. A positive pitch rate of over 5° per second will be commanded and maintained until the canard starts trailing the CM upon descending to an altitude under 100,000 feet. Escape tower jettison and ELS activation will automatically occur at approximately 24,000 ft provided that the ELS AUTO sw is in the on (up) position.

The ELS decelerates the CM to a safe touchdown speed. Crew couch attenuators automatically reduce the touchdown impact and start operating at approximately 20 G.

STA/T	STEP	PROCEDURE	PANEL	REMARKS
		5.1.1.1 Mode 1A LES Abort (00:00 - 00:42)		
CDR	1	Abort initiation auto or manual THC - CCW	X X X X	If manual backup is required for any auto event after abort initiation it must be performed after LE motor burnout (abort T + 00:05) due to the high g environment during LE motor burn.
		XXXXXXXXXXXXXXXXXXXXXXXXXX X CM/SM SEP (both) - on (up) X XXXXXXXXXXXXXXXXXXXXXXXXXX	X	Guarded. On position is momentary. If the abort is initiated with the CM/SM SEP switches, subsequent events may require manual initiation and must be performed after LE motor burnout.
		BECO (auto after T + 00:40)	X X X	Request ground command BECO
		Event Timer reset and counting up (auto)	X X X	
		CM/SM deadface (auto)	X X	
		SM C/W lt (10) - on	X X	
		MASTER ALARM pb/lt - on	X X X	
		CM RCS pressurize (auto)	X X X	
		RCS control transfer (auto)	X X	

STA/T STEP	PROCEDURE	PANEL	REMARKS
CDR	Entry batteries to main buses (auto if abort initiated prior to T-01:15)	X	MN BUS TIE switches are set to AUTO by T-30:00 and then to ON at T-1:15. D-C main buses must be energized to provide power for RCS transfer, propellant dump, and purge.
	CM RCS oxidizer dump (auto)	X	
	CM RCS isolation valves close (auto)	X	
00:00.1	CM/SM separation (auto)	X	
	LE and PC motors fire (auto)	X	
00:01.8	CM/SM separation pyro deadface (auto)	X	
00:05	CM RCS fuel dump (auto)	X	
	XXXXXXXXXXXXXXXXXXXXXXXXXXXX		
	X		
	X If abort initiated with CM/SM SEP sw (both) or backup required for any auto event		
	X		
	X EVNT TMR RSET - RESET		RESET position is momentary.

LES ABORT MODES

STA/T	STEP	PROCEDURE	PANEL	REMARKS
CDR		X EVNT TMR STRT - START		START position is momentary.
		X		
CMP		X CM RCS PRESS - on (up)		Guarded. On position is momentary.
		X		
		X RCS TRANF - CM		CM position is momentary.
		X		
LMP		X MN BUS TIE (2) - on (up)		
		X		
CMP		X Verify ABRT SYS		
		X PRPLNT - DUMP AUTO		
		X		
		X CM RCS PRPLNT (2) - OFF		OFF position is momentary.
		X		
CDR		X LES MOT FIRE pb - push		Guarded. The pitch control motor will not fire if the LES MOT FIRE pushbutton is used as a backup 1.8 sec after abort initiation.
		X		
		XXXXXXXXXXXXXXXXXXXXXXXXXX		
			X	
			X	
00:11		Canard deploy (auto)	X No backup required	The CANARD DEPLOY pushbutton should not be used as a backup on Mode 1A. Since adverse attitudes and critical timing is involved, canard deployment at the wrong time could be detrimental to crew safety. The launch escape vehicle will operate satisfactorily without canard deployment.
			X on Mode 1A	
			X	
			X	
			X	
			X	
			X	
CMP	2	C/W CSM - CM	X	Extinguishes all SM C/W lights and enables CM RCS C/W lights.
			X	
	3	MASTER ALARM pb/lt -	X	
		push	X	
			X	
CDR			X	
00:14		ELS logic arm (auto)	X	

LES ABORT MODES

STA/T	STEP	PROCEDURE	PANEL	REMARKS
CDR	4	ELS LOGIC - on (up)	X X	Guarded. On position is momentary.
		LES TWR jett (auto)	X X	
CMP		a. Docking ring sep	X CSM/LM FINAL SEP X (both) - on X (up)	Guarded. On position is momentary.
		b. TWR attach nuts detonate	X ABRT SYS TWR JETT X (both) - on (up) X X	Guarded. On position is momentary. If the TWR JETT switches are used to jettison the LET, subsequent events will require manual initiation.
		c. SCS RCS disable	X RCS CMD - OFF X	OFF position is momentary.
		d. TWR jett motor fire	X X X	
CDR 00:14.4		Apex cover jett (auto)	X APEX COVER JETT X pb - push X	Guarded.
00:16		Drogue parachutes deploy (auto)	X DROG DPLY pb - X push (2 sec X after apex cover X jett) X	Guarded.
		WARNING Below alidade marker on altimeter, MAIN DPLY pb - push	X X X Altitude = 0.4 NM X X	

LES ABORT MODES

STA/T	STEP	PROCEDURE	PANEL	REMARKS
CDR		X		
00:18		CM RCS helium purge (auto)	X CM RCS He DUMP pb - push	Guarded.
			X CM PRPLNT DUMP - DUMP	Guarded. The CM RCS PRPLNT DUMP and PURGE switches provide alternate means of initiating He dump.
			X CM PRPLNT PURG - PURGE	
			X	
<10K'		Main parachutes and VHF recovery antenna deploy (auto)	X	Main parachutes disreef in approximately 15 sec.
	5	MAIN DPLY pb - push (within 1 sec)	X	Guarded. MAIN DEPLOY pushbutton should be pushed within 1 sec after pilot chute mortars fire to insure simultaneous deployment of main parachutes.
LMP	6	Set up entry communications	X	
		VHF AM (2) - SIMPLEX	X	
		VHF ANT - RECY	X	
		VHF BCN - ON	X	
CDR		Transmit voice (VHF AM) reporting Position Main chutes deployed Crew status	X	Continue voice transmission until touchdown. If contact is established on one frequency, turn the other VHF AM switch off.
	7	DIRECT O2 vlv - OPEN (CCW)	X	

STA/T	STEP	PROCEDURE	PANEL	REMARKS
LMP	8	cb FLT & POST LDG BAT BUS A, B and BAT C (3) - close	X X X X	Connects battery bus A, B, and bat C to the FLT and PL bus.
	9	cb FLT/PL MNA - open	X X	
	10	cb FLT/PL MNB - open	X X	
CDR			X	
3K'	11	CAB PRESS RELF (RH) - DUMP (safety latch off)	X X X X	Assures minimum cabin-to-ambient negative ΔP for landing impact.
	12	FLOOD - POST LDG	X X X X	Provides power from the FLT & PL bus to one floodlight in the LH couch area and one floodlight in the center couch area.
	13	FLOOD DIM - 1 or 2	X X X X X	Position 1 provides power to two secondary floodlights, and position 2 provides power to two primary floodlights when the other FLOOD sw is in the POST LDG position and the d-c main buses are deactivated.
CMP	14	Verify RCS IND sel - CM 1	X X X	Provides means of monitoring He pressure.
CDR			X	
800'	15	CAB PRESS RELF (2) - CLOSE (safety latch off)	X X X	Valves must be closed prior to touchdown to prevent water from entering CM.

STA/T	STEP	PROCEDURE	PANEL	REMARKS
CMP	16	CM RCS PRPLNT (2) - OFF	X	
			X	
		CM RCS PRPLNT tb (2) -	X	Verifies at least one valve closed in each system.
		bp	X	
			X	
LMP	17	MN BUS TIE (2) - OFF	X	Removes power from the dc main buses.
			X	
		CAUTION	X	
			X	
		Switches must be left	X	
		in OFF position to	X	
		insure that batteries	X	
		A, B and C are used	X	
		to power the post-	X	
		landing systems only,	X	
		and to prevent battery	X	
		shorting caused by	X	
		water entering the CM	X	
		feed-through connectors.	X	
			X	
	18	Postlanding check,	X	
		para 4.20	X	

STA/T	STEP	PROCEDURE	PANEL	REMARKS
		5.1.1.2 Mode 1B LES Abort (00:42 - 01:50)		
CDR	1	Abort initiation auto or manual THC - CCW		If manual backup is required for any auto event after abort initiation, it must be performed after LE motor burnout (abort T + 00:05) due to the high g environment during LE motor burn.
		CM/SM SEP (both) - on (up)		Guarded. On position is momentary. If the abort is initiated with the CM/SM SEP switches, subsequent events may require manual initiation and must be performed after LE motor burnout.
		BECO (auto)	Request ground command BECO	
		Event Timer reset and counting up (auto)		
		CM/SM deadface (auto)		
		SM C/W lt (10) - on		
LMP		MASTER ALARM pb/lt - on		
CDR		CM RCS pressurize (auto)		
		RCS control transfer (auto)		

STA/T STEP	PROCEDURE	PANEL	REMARKS
00:00.1	CM/SM separation (auto)	X	
		X	
		X	
	LE motor fire (auto)	X	
		X	
00:01	SCS/RCS enable (auto)	X	
		X	
	CM/SM separation pyro deadface (auto)	X	
		X	
		X	
	XXXXXXXXXXXXXXXXXXXXXXXXXX		
	X		
00:05	X If abort initiated with		
	X CM/SM SEP sw (both)		
	X or backup required		
	X for any auto event		
CDR	X EVNT TMR RSET - RESET		RESET position is momentary.
	X		
	X EVNT TMR STRT - START		START position is momentary.
	X		
CMP	X CM RCS PRESS - on (up)		Guarded. On position is momentary.
	X		
	X RCS TRANFR - CM		CM position is momentary.
	X		
CDR	X LES MOT FIRE pb - push		Guarded.
	X		
CMP	X RCS CMD - ON		ON position is momentary.
	X		
	XXXXXXXXXXXXXXXXXXXXXXXXXX		
CDR		X	
00:11	Canard deploy (auto)	X	CNRD DPLY pb - push

Guarded.

LES ABORT MODES

ABORT

STA/T	STEP	PROCEDURE	PANEL	REMARKS
CMP	2	C/W CSM - CM		Extinguishes all SM C/W lights and enables CM RCS lights.
LMP	3	MASTER ALARM pb/lt - push		
CMP 00:14		ELS logic arm (auto)	ELS LOGIC - on (up)	Guarded. On position is momentary.
24K'		LES TWR jett (auto)		
		a. Docking ring sep	CSM/LM FINAL SEP (both) - on (up)	Guarded. On position is momentary.
		b. TWR attach nuts detonate	ABRT SYS TWR JETT (both) - on (up)	Guarded. On position is momentary.
		c. SCS RCS disable	RCS CMD - OFF	OFF position is momentary.
		d. TWR jett motor fire		
CDR		Apex cover jett (auto)	APEX COVER JETT pb - push	Guarded.
		Drogue parachutes deploy (auto)	DROG DPLY pb - push (2 sec after apex cover jett)	Guarded.
23.5K'	4	Monitor CAB PRESS ind - starts increase	If not increasing by 17K': CAB PRESS RELF (RH) - DUMP (safety latch off)	No increase indicates cabin pressure relief valve failure.

LES ABORT MODES

STA/T	STEP	PROCEDURE	PANEL	REMARKS
CDR		X		
10K'		Main parachutes and VHF X		Auto deployment occurs between 10,950 feet and 9,100 feet. Parachutes disreef in approximately 15 sec.
		recovery antenna X		
		deploy (auto) X		
		X		
	5	MAIN DPLY pb - push X		Guarded. MAIN DEPLOY pushbutton should be pushed within one second after pilot chute mortars fire to insure simultaneous deployment of main parachutes.
		(within 1 sec) X		
		X		
		X		
	6	EVNT TMR RSET - RESET X		RESET position is momentary.
		X		
00:00	7	EVNT TMR STRT - START X		START position is momentary.
		X		
	8	DIRECT O2 vlv - OPEN X		
		(CCW) X		
		X		
	9	CM RCS LOGIC - on (up) X		Must be on to power CM PRPLNT DUMP switch.
		X		
00:18		X		
	10	CM PRPLNT DUMP - on (up) X		Guarded.
		(dump burn is audible) X		
		X		
CMP	11	RCS IND sel - CM 1 X	RCS IND sel - CM 2	
		X		
		CM RCS He ind - X	CM RCS He ind -	
		decreasing X	decreasing. If	
		X	not decreasing	
		X	or RCS jets not	
		X	firing	
CDR,CMP		X	RHC (2) - Fire	One RHC is positioned to command plus yaw and roll (excluding plus pitch) and the other RHC is positioned to command minus yaw, pitch and roll.
		X	all RCS jets	
		X	(except plus	
		X	pitch) until	
		X	propellants	
		X	are depleted	

LES ABORT MODES

ABORT

STA/T	STEP	PROCEDURE	PANEL	REMARKS
CMP	12	Close stm press vlv	X	This procedure is performed to maintain the integrity of the primary and secondary loop for postlanding evaluation.
		GLY EVAP STM PRESS	X	
		AUTO - MAN	X	
			X	
		GLY EVAP STM PRESS	X	INCR position is momentary.
		INCR - INCR for	X	
		45 sec	X	
			X	
	13	Set up entry	X	
		communication	X	
LMP		VHF AM (2) - SIMPLEX	X	
		VHF ANT - RECY	X	
		VHF BCN - ON	X	
			X	
	14	Ground track	X	
		determination	X	
			X	
CMP		a. Key V37E 21E	X	
		DSKY P21	X	
			X	
		b. FL V04 N06	X	
		Option code	X	
		00002	X	
		CMC assumed option	X	
		0000X	X	
		(00001 - CSM;	X	
		00002 - LM)	X	
			X	
		Accept PRO	X	
		Reject Key V22E	X	
		Load	X	
		desired	X	
		option	X	

STA/T	STEP	PROCEDURE	PANEL	REMARKS
CMP		c. FL V06 N34	X	
		GET Lat Long	X	
		00XXX. HRS	X	
		000XX. MIN	X	
		0XX.XX SEC	X	
			X	
		Accept PRO	X	
		Reject Key V25E	X	
		Load	X	
		desired	X	
		GET Lat	X	
		Long	X	
			X	
		d. FL V06 N43	X	
		Lat (+North)	X	
		XXX.XX DEG	X	
		Long (+East)	X	
		XXX.XX DEG	X	
		Alt XXXX.X NM	X	Altitude is above launch pad radius.
			X	
CDR	15	Transmit voice reporting	X	
		Position	X	
		Main chutes disreefed	X	
		Crew status	X	
			X	
CMP	16	Terminate P21	X	
		PRO	X	
		FL V37	X	
		Key 00E	X	Calls CMC idling program for power conservation.
			X	
	17	When propellant dump	X	Both CM RCS LOGIC and CM PRPLNT DUMP switches must be
		burn is completed	X	on to power the CM PRPLNT PURG switch.

STA/T	STEP	PROCEDURE	PANEL	REMARKS
CDR		CM PRPLNT PURG - on (up) (purge is audible)	CM RCS He DUMP pb - push	Guarded. The CM RCS He DUMP PB should be used to initiate purge following a normal dump operation if CM PRPLNT PURG switch fails to initiate purge.
CDR,CMP			If RHC (2) used for propellant dump burn RHC (2) - fire all jets (except plus pitch)	One RHC is positioned to command plus yaw and roll (excluding plus pitch) and the other RHC is positioned to command minus yaw, pitch and roll.
LMP	18	cb FLT & PL BAT BUS A, B & BAT C (3) - close		
	19	cb FLT/PL MNA - open		
	20	cb FLT/PL MNB - open		
CDR 3K'	21	CAB PRESS RELF (RH) - DUMP (safety latch off)		Insures minimum cabin-to-ambient negative ΔP for CM impact.
	22	FLOOD FIXED - POST LDG		Provides power from the flight and postlanding bus to one floodlight in the LH couch area and one floodlight in the center couch area.
	23	FLOOD DIM - 1 or 2		Position 1 provides power to two secondary floodlights and position 2 provides power to two primary floodlights when the FLOOD FIXED switch is in the POST LDG position after the d-c main buses are deactivated.

LES ABORT MODES

STA/T	STEP	PROCEDURE	PANEL	REMARKS
CDR			X	
800'	24	CAB PRESS RELF (2) -	X	Valves must be closed prior to touchdown to prevent
		CLOSE (safety latch	X	water from entering CM.
		off)	X	
			X	
CMP	25	CM RCS PRPLNT (both) -	X	
		OFF	X	
		CM RCS PRPLNT tb	X	Verifies at least one valve closed in each system.
		(both) - bp	X	
			X	
LMP	26	MN BUS TIE (2) - OFF	X	Removes power from the d-c main buses.
			X	
		CAUTION	X	
			X	
		MN BUS TIE switches	X	
		must be left in OFF	X	
		position to insure	X	
		that batteries A, B	X	
		& C are used to power	X	
		the postlanding systems	X	
		only, and to prevent	X	
		battery shorting caused	X	
		by water entering the	X	
		CM feed-through	X	
		connectors.	X	
			X	
	27	Postlanding check,	X	
		para 4.20	X	

STA/T	STEP	PROCEDURE	PANEL	REMARKS
		5.1.1.3 Mode 1C LES Abort (01:50 - 03:14)		
CDR	1	Abort initiation	X	If manual backup is required for any auto event after abort initiation it must be performed after LE motor burnout (abort T + 00:05) due to the high g environment during LE motor burn.
		THC - CCW	X	
			X	
			X	
		XXXXXXXXXXXXXXXXXXXXXXXXXX		
		X		
		X CM/SM SEP (both) - on	X	Guarded. On position is momentary. If the abort is initiated with the CM/SM SEP switches, subsequent events may require manual initiation and must be performed after LE motor burnout.
		X (up)		
		X		
		XXXXXXXXXXXXXXXXXXXXXXXXXX		
			X	
		BECO (auto)	X	Request ground command BECO
			X	
			X	
		Event Timer reset and	X	
		counting up (auto)	X	
			X	
		CM/SM deadface (auto)	X	
			X	
		SM C/W lt (10) - on	X	
			X	
LMP		MASTER ALARM pb/lt -	X	
		on	X	
			X	
CDR		CM RCS pressurize	X	
		(auto)	X	
			X	
		RCS control transfer	X	
		(auto)	X	

LES ABORT MODES

STA/T STEP	PROCEDURE	PANEL	REMARKS
00:00.1	CM/SM separation (auto)	X	
		X	
		X	
	LE motor fire (auto)	X	
		X	
00:01	SCS/RCS enable (auto)	X	
		X	
00:01.8	CM/SM separation pyro deadface (auto)	X	
		X	
		X	
00:05	XXXXXXXXXXXXXXXXXXXXXXXXXXX		
	X		
	X If abort initiated with		
	X CM/SM SEP sw (both)		
	X or backup required		
	X for any auto event		
	X		
CDR	X EVNT TMR RSET - RSET		RESET position is momentary.
	X		
	X EVNT TMR STRT - START		START position is momentary.
	X		
CMP	X CM RCS PRESS - on (up)		Guarded. On position is momentary.
	X		
	X RCS TRANF - CM		CM position is momentary.
	X		
CDR	X LES MOT FIRE pb - push		Guarded.
	X		
CMP	X RCS CMD - ON		ON position is momentary.
	X		
	XXXXXXXXXXXXXXXXXXXXXXXXXXX		
CDR		X	
00:11	Canard deploy (auto)	X	CNRD DPLY pb - push Guarded.

LES ABORT MODES

STA/T	STEP	PROCEDURE	PANEL	REMARKS
CMP	2	C/W CSM - CM	X X	Extinguishes all SM C/W lights and enables CM RCS lights.
LMP	3	MASTER ALARM pb/lt - push	X X	
CMP			X	
00:14		ELS logic arm (auto)	X ELS LOGIC - on (up) X	Guarded.
	4	Monitor LEV status	X	
		GIMBAL lock lt - out	X	
		TFF greater than 100 sec	X X	
		IMU gimbal lock can be avoided during manual control	X X X	
		FDAI's agree	X X	
		If all of the above conditions are met proceed to step 5, otherwise proceed to step 16	X X X X X X	
	5	ABRT SYS TWR JETT (both) - on (up)	X X	Guarded. On position is momentary.
		a. Docking ring sep	X CSM/LM FINAL SEP (both) - on (up) X	Guarded. On position is momentary.
		b. TWR attach nuts detonate	X X X	
		c. TWR jett motor fire	X X	

LES ABORT MODES

STA/T	STEP	PROCEDURE	PANEL	REMARKS
CDR	6	Damp rates	X X	
	7	Maneuver to entry attitude R = 0°, P = 135°, Y = 0°	X X X X X	
	8	Set up for CM RCS 1 AUTO RCS SEL CM 1 (6) - MNA/MNB	X X X X	
		AUTO RCS SEL CM 2 (6) - OFF	X X X	
	9	BMAG MODE (3) - RATE 2	X X	Prevents FDAI roll bug jump.
	10	EMS FUNC - ENTRY	X X	
	11	EMS MODE - AUTO	X X	
	12	When .05 G lt - on .05 G sw - on	X X X	
	13	EMS ROLL - on (up)	X X	
	14	Maintain full lift	X X	
50K'	15	Proceed to Earth Landing Phase para 4.19	X X X	

LES ABORT MODES

ABORT

STA/T	STEP	PROCEDURE	PANEL	REMARKS
		(LET descent from step 4)		
CDR	16	Establish and maintain minimum 5°/sec + pitch rate with RHC		The pitchup rate of at least 5°/sec should be maintained until the canard and LET begin trailing the CM upon descending below the entry interface.
CMP				
24K'		LES TWR jett (auto)		
		a. Docking ring sep	CSM/LM FINAL SEP (both) - on (up)	Guarded. On position is momentary.
		b. TWR attach nuts detonate	ABRT SYS TWR JETT (both) - on (up)	Guarded. On position is momentary.
		c. SCS RCS disable	RCS CMD - OFF	OFF position is momentary.
		d. TWR jett motor fire		
CDR		Apex cover jett (auto)	APEX COVER JETT pb - push	Guarded.
		Drogue parachutes deploy (auto)	DROG DPLY pb - push (2 sec after apex cover jett)	Guarded.
23.5K'				
	17	Monitor CAB PRESS ind - starts increase	If not increasing by 17K': CAB PRESS RELF (RH) - DUMP (safety latch off)	No increase indicates cabin pressure relief valve failure.

LES ABORT MODES

STA/T	STEP	PROCEDURE	PANEL	REMARKS
CDR		X		
10K'		Main parachutes and	X	Auto deployment occurs between 10,950 feet and 9,100
		VHF recovery antenna	X	feet. Parachutes disreef in approximately 15 sec.
		deploy (auto)	X	
			X	
	18	MAIN DPLY pb - push	X	MAIN DEPLOY pushbutton should be pushed within one
		(within 1 sec)	X	second after pilot chute mortars fire to insure
			X	simultaneous deployment of main parachutes.
			X	
	19	EVNT TMR RSET - RESET	X	RESET position is momentary.
			X	
00:00			X	
	20	EVNT TMR STRT - START	X	START position is momentary.
			X	
	21	DIRECT O2 vlv - OPEN	X	
		(CCW)	X	
			X	
	22	CM RCS LOGIC - on (up)	X	Must be on to power CM PRPLNT DUMP switch.
			X	
00:18			X	
	23	CM PRPLNT DUMP - on (up)	X	Guarded.
		(dump burn is audible)	X	
			X	
CMP	24	RCS IND sel - CM 1	X	RCS IND sel - CM 2
		CM RCS He ind -	X	CM RCS He ind -
		decreasing	X	decreasing. If
			X	not decreasing
			X	or RCS jets not
			X	firing
CDR,CMP			X	RHC (2) - Fire
			X	all RCS jets
			X	(except plus
			X	pitch) until
			X	propellants
			X	are depleted

LES ABORT MODES

ABORT

STA/T	STEP	PROCEDURE	PANEL	REMARKS
CMP	25	Close stm press vlv	X	This procedure is performed to maintain the integrity of the primary and secondary loop for postlanding evaluation.
		GLY EVAP STM PRESS	X	
		AUTO - MAN	X	
			X	
		GLY EVAP STM PRESS	X	INCR position is momentary.
		INCR - INCR for	X	
		45 sec	X	
			X	
	26	Set up entry	X	
		communications	X	
LMP		VHF AM (2) - SIMPLEX	X	
		VHF ANT - RECY	X	
		VHF BCN - ON	X	
			X	
	27	Ground track	X	
		determination	X	
			X	
CMP		a. Key V37E 21E	X	
		DSKY P21	X	
			X	
		b. FL V04 N06	X	
		Option code 00002	X	
		CMC assumed option	X	
		0000X	X	
		(00001 - CSM;	X	
		00002 - LM)	X	
			X	
		Accept PRO	X	
		Reject Key V22E	X	
		Load desired	X	
		option	X	

STA/T	STEP	PROCEDURE	PANEL	REMARKS
CMP		c. FL V06 N34	X	
		GET Lat Long	X	
		00XXX. HRS	X	
		000XX. MIN	X	
		0XX.XX SEC	X	
			X	
		Accept PRO	X	
		Reject Key V25E	X	
		Load desired	X	
		GET Lat	X	
		Long	X	
			X	
		d. FL V06 N43	X	
		Lat (+North)	X	
		XXX.XX DEG	X	
		Long (+East)	X	
		XXX.XX DEG	X	
		Alt XXXX.X NM	X	Altitude is above launch pad radius.
			X	
CDR	28	Transmit voice reporting	X	Continue voice transmission until touchdown. If contact is established on one frequency, turn the other VHF AM off.
		Position	X	
		Main chute disreefed	X	
		Crew status	X	
			X	
	29	Terminate P21	X	
		PRO	X	
		FL V37	X	
		Key 00E	X	Calls CMC idling program for power conservation.
			X	
	30	When propellant dump	X	Both CM RCS LOGIC and CM PRPLNT DUMP switches must be on to power the CM PRPLNT PURG switch.
		burn is completed	X	

STA/T	STEP	PROCEDURE	PANEL	REMARKS
CDR		CM PRPLNT PURG - on (up) (purge is audible)		Guarded. The CM RCS DUMP pb should be used to initiate purge following a normal dump operation if CM PRPLNT PURGE switch fails to initiate purge.
			CM RCS He DUMP pb - push	
CDR,CMP			If RHC (2) used for propellant dump burn RHC (2) - Fire all jets (except plus pitch) for 30 sec	One RHC is positioned to command plus yaw and roll (excluding plus pitch) and the other RHC positioned to command minus yaw, pitch, and roll.
LMP	31	cb FLT & PL BAT BUS A, B & BAT C (3) - close		
	32	cb FLT/PL MNA - open		
	33	cb FLT/PL MNB - open		
CDR 3K'	34	CAB PRESS RELF (RH) - DUMP (safety latch off)		Insures minimum cabin-to-ambient negative ΔP for CM impact.
	35	FLOOD FIXED - POST LDG		Provides power from the FLT & PL bus to one floodlight in the LH couch area and one floodlight in the center couch area.
	36	FLOOD DIM - 1 or 2		Position 1 provides power to two secondary floodlights, and position 2 provides power to two primary floodlights when the other flood sw is in the POST LDG position and the dc main buses are deactivated.

LES ABORT MODES

STA/T	STEP	PROCEDURE	PANEL	REMARKS
CDR			X	
800'	37	CAB PRESS RELF (2) -	X	
		CLOSE (safety latch	X	Valves must be closed prior to touchdown to prevent
		off)	X	water from entering CM.
			X	
CMP	38	CM RCS PRPLNT (both) -	X	
		OFF	X	
		CM RCS PRPLNT tb	X	Verifies at least one valve closed in each system.
		(both) - bp	X	
			X	
LMP	39	MN BUS TIE (2) - OFF	X	Removes power from the d-c main buses.
			X	
		CAUTION	X	
			X	
		MN BUS TIE switches	X	
		must be left in OFF	X	
		position to insure	X	
		that batteries A, B,	X	
		& C are used to power	X	
		the postlanding systems	X	
		only, and to prevent	X	
		battery shorting caused	X	
		by water entering the	X	
		CM feed-through	X	
		connectors.	X	
			X	
	40	Postlanding check,	X	
		para 4.20	X	

STA/T STEP	PROCEDURE	PANEL	REMARKS

5.1.2 SPS ABORT MODES

An abort in the SPS mode is accomplished by utilizing the SM RCS or the SPS engine. Separation and a short +X translation to increase separation distance, or an SPS burn to arrest tumbling, will be manually initiated. After S-IVB separation and spacecraft stabilization, the abort possibilities separate into four general types of abort.

- CM/SM separation and coast-to-landing site (MODE II).
- Shaped trajectory abort in which the SPS is used for a variable ΔV maneuver to correct the trajectory for the desired landing site in the Atlantic Recovery Area (MODE III).
- Abort-to-earth-orbit in which the SPS is used to attain earth orbital altitude and speed (MODE IV).
- Shaped trajectory abort in which the SPS is used for a fixed ΔV maneuver to correct the trajectory for the desired landing site in the Indian Ocean Recovery Area (FIXED ΔV MODE).

STA/T	STEP	PROCEDURE	PANEL	REMARKS
		5.1.2.1 Mode II SPS Abort (03:14 to 10:12)		
CDR	1	THC - CCW (4.0 sec minimum)	X X X X X	Direct ullage is commanded when the THC is placed CCW. THC must be left in CCW detent for 4.0 sec to allow the 3.0 sec timer (adapter separation) and the 0.8 sec timer (RCS enable) to operate.
00:00		Event Timer reset and counting up (auto)	X EVNT TMR RSET - X RESET	RESET position is momentary.
			X EVNT TMR STRT - X START	START position is momentary.
		BECO (auto) LV ENG lt (5) - on	X Request ground X command SIVB X BECO	
		Direct ullage started (auto)	X DIRECT ULL pb - X push	
00:03		Adapter separation (auto) LV ENG lt (5) - off	X CSM/LV SEP pb - X push X	Guarded.
CMP			X	
00:03.8		RCS/SCS enable (auto)	X RCS CMD - ON X	ON position is momentary.
CDR			X	
00:04	2	LV/SPS IND SII/SIVB - GPI	X X X	
	3	Verify SC CONT - SCS	X X	
	4	THC - center and +X translation	X X	Automatic direct ullage is terminated when THC is returned to center.

SPS ABORT MODES

STA/T	STEP	PROCEDURE	PANEL	REMARKS
CDR			X	
00:06	5	Monitor spacecraft rates	X If rates high:	
			X ΔV THRUST (2) -	Guarded.
			X NORMAL	
			X THRUST ON pb - push	
			X or SPS THRUST -	
			X DIRECT ON	Lever-lock.
			X Terminate +X trans-	
			X lation - IGN +1	
			X sec	
			X Damp spacecraft	
			X rates	
			X After rates stabi-	
			X lize, ΔV THRUST	
			X (2) - OFF	Guarded.
			X	
CMP	6	Key V16 N50E	X	
		ΔR (Miss Distance)	X	
		XXXX.X NM	X	Negative for undershoot, positive for overshoot.
		Hp XXXX.X NM	X	
		TFF XXBXX MIN-	X	
		SEC	X	
CDR			X	
00:24	7	Terminate +X translation	X	
			X	
	8	Start maneuver to entry	X	
		attitude	X	
		R 0°, P 126°, Y 0°	X	
			X	
CMP	9	CM/SM SEP (both) - on	X	Guarded. Up position momentary. CM/SM umbilical and
		(up)	X	tension ties are severed.
		CM/SM deadface (auto)	X	
		SM C/W lt (10) - on	X	

SPS ABORT MODES

STA/T	STEP	PROCEDURE	PANEL	REMARKS
LMP		MASTER ALARM pb/lts - on	X	
CDR		CM RCS pressurize (auto)	X CM RCS PRESS - on (up)	Guarded. On (up) position is momentary.
		RCS control transfer - (auto)	X RCS TRNFR - CM	CM position is momentary.
		CM/SM separation (auto)	X	
CMP	10	C/W CSM - CM	X	Extinguishes all SM C/W lights and enables CM RCS C/W lights.
LMP	11	MASTER ALARM pb/lt - push	X	
CDR	12	ATT DBD - MAX	X	
	13	Note TFF	X	
01:40			X	
	14	Complete maneuver to entry attitude	X	BEF, heads down, lift vector up.
	15	Set up for CM RCS SYS 1	X	
		AUTO RCS SEL CM 1 (6) - MNA or MNB	X	
		AUTO RCS SEL CM 2 (6) - OFF	X	
CMP	16	CSM/LM FINAL SEP (both) - on (up)	X	Guarded. On position is momentary. Jettisons docking ring.
CDR	17	BMAG MODE (3) - RATE 2	X	Prevents roll bug jump when .05 G sw is set to on.
	18	EMS FUNC - ENTRY	X	
	19	EMS MODE - AUTO	X	

SPS ABORT MODES

ABORT

STA/T	STEP	PROCEDURE	PANEL	REMARKS
CDR	20	When .05 G lt - on,	X	
		.05 G sw - on (up)	X	
			X	
	21	EMS ROLL - on (up)	X	
		Align roll bug	X	
			X	
	22	Maintain full lift	X	
			X	
	23	Proceed to Earth	X	
		Landing Phase,	X	
		para 4.19	X	

STA/T	STEP	PROCEDURE	PANEL	REMARKS
		5.1.2.2 Mode III SPS Abort (10:12 to Insertion)		
CDR	1	THC - CCW (4.0 sec minimum)	X X X X X	Direct ullage is commanded when the THC is placed CCW. THC must be left in CCW detent for 4.0 sec to allow the 3.0 sec timer (adapter separation) and the 0.8 sec timer (RCS enable) to operate.
00:00		Event timer reset and counting up (auto)	X EVNT TMR RSET - X RESET	RESET position is momentary.
			X EVNT TMR STRT - X START	START position is momentary.
		BECO (auto)	X Request ground X command SIVB X BECO	
		LV ENG lt (5) - on	X	
		Direct ullage started (auto)	X DIRECT ULL pb - X push	
00:03		Adapter separation (auto)	X CSM/LV SEP pb - X push	Guarded.
		LV ENG lt (5) - off	X	
CMP			X	
00:03.8		RCS/SCS enable (auto)	X RCS CMD - ON X	ON position is momentary.
CDR			X	
00:04	2	LV/SPS IND SII/SIVB - GPI	X X X	
	3	Verify SC CONT - SCS	X X	
	4	THC - center and +X translation	X X	Automatic direct ullage is terminated when THC is returned to center.

SPS ABORT MODES

STA/T	STEP	PROCEDURE	PANEL	REMARKS
CDR			X	
00:06	5	Monitor spacecraft rates	X If rates high:	
			X ΔV THRUST (2) -	
			X NORMAL	Guarded.
			X THRUST ON pb -	SPS burn used only if needed to damp rates.
			X push; or SPS	
			X THRUST - DIRECT	
			X ON	Lever-lock.
			X Terminate +X	
			X translation -	
			X IGN +1 sec	
			X Damp spacecraft	
			X rates	
			X After rates stabi-	
			X lize, ΔV THRUST	
			X (2) - OFF	Guarded.
CMP	6	Key V16 N50E	X	
		ΔR (Miss Distance)	X	
		XXXX.X NM	X	Negative for undershoot, positive for overshoot.
		Hp XXXX.X NM	X	
		TFF XXBXX MIN-	X	
		SEC	X	
CDR			X	
00:24	7	Terminate +X translation	X	
			X	
	8	Maneuver to retro	X	
		attitude	X	
		R 180°, P 200°, Y 0°	X	BEF, heads up.
			X	
	9	Obtain retro update	X	
			X	
	10	BMAG MODE (3) - ATT 1/	X	
		RATE 2	X	

SPS ABORT MODES

STA/T	STEP	PROCEDURE	PANEL	REMARKS
CDR	11	Verify SPS GMBL ind (2) = SPS GMBL tw (2) settings		
	12	EMS MODE - AUTO		
01:50				
	13	Start ullage		
	14	ΔV THRUST (2) - NORMAL		Guarded.
02:05				
	15	THRUST ON pb - push	SPS THRUST - DIRECT ON	Lever lock.
	16	Terminate ullage - IGN +1 sec		
	17	ΔV ind = desired value or ΔR = 0		
		WARNING		
		If TFF ≤100 sec thrusting must be terminated and separation maneuver performed.		
	18	ΔV THRUST (2) - OFF		Guarded.
	19	EMS MODE - STBY		

SPS ABORT MODES

STA/T	STEP	PROCEDURE	PANEL	REMARKS
CDR	20	Start maneuver to entry attitude R 300°, P 120°, Y 17°	X X X X	
CMP	21	CM/SM SEP (both) - on (up)	X X	Guarded. On position is momentary. CM/SM umbilical and tension ties are severed.
		CM/SM deadface (auto)	X	
		SM C/W lt (10) - on	X	
		MASTER ALARM pb/lt - on	X	
		CM RCS pressurize (auto)	X X	CM RCS PRESS - on (up) — Guarded. On position is momentary.
		RCS control transfer (auto)	X X	RCS TRNFR - CM — CM position is momentary.
		CM/SM separation (auto)	X X	
	22	C/W CSM - CM	X X	Extinguishes all SM C/W lights and enables CM RCS C/W lights.
LMP	23	MASTER ALARM pb/lt - push	X X X	
CDR	24	ATT DBD - MAX	X X	
	25	Note TFF	X X	
	26	Complete maneuver to entry attitude	X X X	BEF, heads down, half lift vector south.
	27	Set up for CM RCS SYS 1	X	
		AUTO RCS SEL CM 1	X	
		(6) - MNA OR MNB	X	
		AUTO RCS SEL CM 2	X	
		(6) - OFF	X	

STA/T	STEP	PROCEDURE	PANEL	REMARKS
LMP	28	CSM/LM FINAL SEP	X	Guarded. On position is momentary. Jettisons docking ring.
		(both) - on (up)	X	
			X	
CDR	29	BMAG MODE (3) - RATE 2	X	Prevents roll bug jump when .05 G switch is set to on.
			X	
	30	EMS FUNC - ENTRY	X	
			X	
	31	EMS MODE - AUTO	X	
			X	
	32	When .05 G lt - on,	X	
		.05 G sw - on (up)	X	
			X	
	33	EMS ROLL - on (up)	X	
		Align roll bug	X	
			X	
	34	Maintain half lift	X	
			X	
50K'	35	Proceed to Earth	X	
		Landing Phase,	X	
		para 4.19	X	

STA/T	STEP	PROCEDURE	PANEL	REMARKS
		5.1.2.3 Mode IV SPS Abort (10:07 to Insertion)		
CDR	1	THC - CCW (4.0 sec minimum)	X X X X X	Direct ullage is commanded when the THC is placed CCW. THC must be left in CCW detent for 4.0 sec to allow the 3.0 sec timer (adapter separation) and the 0.8 sec timer (RCS enable) to operate.
00:00		Event timer reset and counting up (auto)	X EVNT TMR RSET - X RESET X EVNT TMR STRT - X START	RESET position is momentary. START position is momentary.
		BECO (auto)	X Request ground X command SIVB BECO	
		LV ENG lt (5) - off	X	
		Direct ullage started (auto)	X DIRECT ULL pb - X push	
00:03		Adapter separation (auto)	X CSM/LV SEP pb - X push	Guarded.
CMP			X	
00:03.8		RCS/SCS enable (auto)	X RCS CMD - ON X	ON position is momentary.
CDR			X	
00:04	2	LV/SPS IND SII/SIVB - GPI	X X X	
	3	Verify SC CONT - SCS	X X	
	4	THC - center and +X translation	X X	Automatic direct ullage is terminated when THC is returned to center.

STA/T	STEP	PROCEDURE	PANEL	REMARKS
CDR			X	
00:06	5	Monitor spacecraft rates	X If rates high:	
			X ΔV THRUST (2) -	Guarded.
			X NORMAL	
			X THRUST ON pb -	SPS burn used only if needed to damp rates.
			X push or SPS	
			X THRUST - DIRECT	
			X ON	Lever-lock.
			X Terminate +X	
			X translation -	
			X IGN +1 sec	
			X Damp spacecraft	
			X rates	
			X After rates stabi-	
			X lize, ΔV THRUST	
			X (2) - OFF	
CMP	6	Key V16 N44E	X	
		Ha XXXX.X NM	X	
		Hp XXXX.X NM	X	
		TFF XXBXX MIN-SEC	X	
			X	
CDR			X	
00:24	7	Terminate +X translation	X	
			X	
	8	Maneuver to insertion	X	
		attitude	X	
		R 180°, P 350°, Y 0°	X	SEF, heads down.
			X	
	9	Obtain insertion update	X	
			X	
	10	BMAG MODE (3) - ATT 1	X	
		RATE 2	X	

STA/T	STEP	PROCEDURE		PANEL	REMARKS
CDR	11	Verify SPS GMBL ind	X		
		(2) = SPS GMBL tw (2)	X		
		settings	X		
			X		
CDR	12	EMS MODE - AUTO	X		
			X		
01:50			X		
	13	Start ullage	X		
			X		
	14	ΔV THRUST (2) - NORMAL	X		Guarded.
			X		
02:05			X		
	15	THRUST ON pb - push	X	SPS THRUST -	
			X	DIRECT ON	
	16	Terminate ullage - IGN	X		
		+1 sec	X		
			X		
	17	ΔV ind = desired value	X		
		Hp ≥75 NM	X		
			X		
	18	ΔV THRUST (2) - OFF	X		
			X		
	19	EMS MODE - STBY	X		
		SECO +40 sec	X		
		Status from ground	X		
			X		
	20	Postorbital Insertion	X		
		Check, para 4.3.2	X		

STA/T	STEP	PROCEDURE	PANEL	REMARKS
		5.1.2.4 Fixed ΔV Mode (11:27 to 22:51)		
CDR	1	THC - CCW (4.0 sec minimum)	X X X X X	Direct ullage is commanded when the THC is placed CCW. THC must be left in the CCW detent for 4.0 sec to allow the 3.0 sec timer (adapter separation) and the 0.8 sec timer (RCS enable) to operate.
00:00		Event timer reset and counting up (auto)	X EVNT TMR RSET - X RESET X EVNT TMR STRT - X START	RESET position is momentary. START position is momentary.
		BECO (auto) LV ENG lt (5) - on	X Request ground X command SIVB X engine cutoff	
		Direct ullage started (auto)	X DIRECT ULL pb - X push	
00:03		Adapter separation (auto)	X CSM/LV SEP pb - X push	Guarded.
		LV ENG lt (5) - off	X	
CMP			X	
00:03.8		RCS/SCS enable (auto)	X RCS CMD - ON X	ON position is momentary.
CDR			X	
00:04	2	LV/SPS IND SII/SIVB - GPI	X X X	
	3	Verify SC CONT - SCS	X X	
	4	THC - center and +X translation	X X	Automatic direct ullage is terminated when THC is returned to center.

STA/T	STEP	PROCEDURE	PANEL	REMARKS
CDR			X	
00:06	5	Monitor spacecraft rates	X If rates high:	
			X ΔV THRUST (2) -	Guarded.
			X NORMAL	
			X THRUST ON pb -	
			X push; or SPS	
			X THRUST - DIRECT	
			X ON	Lever-lock.
			X Terminate +X	
			X translation -	
			X IGN +1 sec	
			X Damp spacecraft	
			X rates	
			X After rates stabi-	
			X lize ΔV THRUST	
			X (2) - OFF	Guarded.
CMP	6	Update target site	X	
		Key V25 N61E	X	
		Enter IORA	X	Latitude and longitude of the Indian Ocean Recovery
		coordinates	X	Area must be entered into the CMC in order to display
		Lat (+North)	X	correct splash errors.
		XXX.XX DEG	X	
		Long (+East)	X	
		XXX.XX DEG	X	
		Hds (+Hds up)	X	
		+/-00001	X	
			X	
	7	Key V16 N50E	X	
		ΔR (Miss Distance)	X	
		XXXX.X NM	X	Negative for undershoot, positive for overshoot.
		Hp XXXX.X NM	X	
		TFF XXBXX MIN-	X	
		SEC	X	

SPS ABORT MODES

STA/T STEP	PROCEDURE	PANEL	REMARKS
CDR		X	
00:24 8	Terminate +X translation	X	
		X	
9	Maneuver to retro	X	
	attitude	X	
	R 180°, P 148°, Y 14°	X	BEF, heads up.
		X	
10	Obtain TIG and retro	X	
	update	X	
		X	
11	Verify SPS GMBL ind	X	
	(2) = SPS GMBL tw (2)	X	
	settings	X	
		X	
12	BMAG MODE (3) - ATT 1/	X	
	RATE 2	X	
		X	
13	EMS MODE - AUTO	X	
		X	
-00:15		X	
14	Start ullage (IGN -15	X	
	sec)	X	
		X	
15	ΔV THRUST (2) - NORMAL	X	Guarded.
		X	
00:00		X	
16	THRUST ON pb - push	X SPS THRUST -	
		X DIRECT ON	
+00:01		X	
17	Terminate ullage -	X	
	IGN +1 sec	X	

STA/T	STEP	PROCEDURE	PANEL		REMARKS
CDR	18	ΔV ind = desired value	X		
		for 400 fps burn, or	X		
		R = 0	X		
			X		
	19	ΔV THRUST (2) - OFF	X		Guarded.
			X		
	20	EMS MODE - STBY	X		
			X		
	21	Start maneuver to entry	X		
		attitude	X		
		R 300°, P 45°, Y 17°	X		
			X		
CMP	22	CM/SM SEP (both) - on	X		Guarded. On position is momentary.
		(up)	X		
		CM/SM deadface (auto)	X		
		SM C/W lt (10) - on	X		
		MASTER ALARM pb/lt - on	X		
		CM RCS PRESS (auto)	X	CM RCS PRESS - on	Guarded. On position is momentary.
			X	(up)	
		RCS control transfer	X	RCS TRNFR - CM	CM position is momentary.
		(auto)	X		
		CM/SM separation (auto)	X		
			X		
LMP	23	C/W CSM - CM	X		Extinguishes all SM C/W lights and enables CM RCS C/W lights.
			X		
	24	MASTER ALARM pb/lt -	X		
		push	X		
			X		
CDR	25	ATT DBD - MAX	X		
			X		
	26	Note TFF	X		

STA/T	STEP	PROCEDURE	PANEL	REMARKS
CDR	27	Complete maneuver to	X	BEF, heads down, lift vector south.
		entry attitude	X	
			X	
	28	Set up for CM RCS SYS 1	X	
		AUTO RCS SEL CM 1	X	
		(6) - MNA or MNB	X	
		AUTO RCS SEL CM 2	X	
		(6) - OFF	X	
			X	
CMP	29	CSM/LM FINAL SEP	X	Guarded. On position is momentary. Jettisons docking ring.
		(both) - on (up)	X	
			X	
CDR	30	BMAG MODE (3) - RATE 2	X	
			X	
	31	EMS FUNC - ENTRY	X	
			X	
	32	EMS MODE - AUTO	X	
			X	
	33	When .05 G lt - on,	X	
		.05 G sw - on (up)	X	
			X	
	34	EMS ROLL - on (up)	X	
		Align roll bug	X	
			X	
	35	Maintain half lift	X	
			X	
	36	Proceed to Earth Landing	X	
		Phase, para 4.19	X	

5.2 MALFUNCTION PROCEDURES

INTRODUCTION

Malfunction procedures encompass the recognition, diagnosis, and corrective action for system malfunctions. In most cases, the crew is alerted to a malfunction condition by C&WS lights and indicators, or by the absence of a scheduled function or event. The crew will then locate, correct, or isolate the malfunction and determine its effect on the scheduled mission. In general, the procedures cover significant single failures. Double unrelated failures are not covered to prevent procedures from becoming complex and unmanageable.

The malfunction procedures are presented in logic flow diagram format and arranged by symptom routines. The symptom routines contain the primary malfunction procedures and are backed up by special subroutines and system reconfiguration routines where necessary. A three column format is used for symptom routine logic flow diagrams. A description and use of each of these columns is as follows:

Symptom Column. The primary purpose of the symptom column is to allow entry into the malfunction procedures. Two types of symptom logic blocks are used in this column. These are the "C/W Status Light" and "Other Symptom" blocks. These two blocks, along with the supporting information under each block, explain and qualify the situation so the reader fully understands the symptom or condition that exists. All symptoms are arranged by systems, i.e., G&C, SPS, RCS, EPS, etc., and are numbered in sequence starting with number 1 for each system. A subsymptom that is directly related to a major symptom is identified by using the same number followed by a lower case letter, 1a, 1b, 1c, etc.

Procedure Column. The procedure column presents a step-by-step logic flow diagram of actions and decisions used to isolate or correct a malfunction symptom. This information is presented with several types of logic blocks. These blocks contain the procedures, decisions, and actions to locate and isolate the failure. Caution and Warning blocks alert the crew to situations which, if not corrected, may degrade the operational integrity of the SC systems or may have critical crew safety consequences. Remote event symbols are used to reference items in the Remarks column or to refer to other procedural steps.

Remarks Column. This column will include the following information:

a. Amplifying additional remarks related to the symptom, i.e., normal operating ranges, relief valve vents at _____ psia, burst disc ruptures at _____ psia, or to notify the user of the urgency that he must treat a particular symptom, etc.

b. Amplifying remarks which relate to a decision and/or action items (e.g., why a step is taken, possible system time lag, etc.).

c. Explain resultant system status or operational capability after a failure has been identified, i.e., how subsystem is degraded, can degraded subsystem support primary mission, early termination of mission, etc.

d. Cautions or Warnings, as necessary, to cover conditions that may exist because of a failure.

APOLLO SC104 MALFUNCTION PROCEDURES

INDEX

All logic flow diagrams to be provided at a later date.

STA/T	STEP	PROCEDURE	PANEL	REMARKS
		5.3 EMERGENCY PROCEDURES		
		INTRODUCTION		
		Emergency procedures provide the crew with the necessary steps to quickly alleviate situations that have (or will) become both crew-hazardous and time-critical. These procedures require instant reaction on the part of the crew to prevent the conditions from becoming worse. In most instances the conditions are physically sensed by the crew rather than brought to their attention by the caution and warning system or voice communication from MSFN.		
		5.3.1 FLIGHT EMERGENCY PROCEDURES		
		5.3.1.1 Fire in CM - TBD		
		5.3.1.2 Contamination in CM		Types, sources, and amount of contamination are not defined. The very existence of contamination in CM is treated as an emergency.
ALL	1	Unsuited crewmen don PGAs		
CDR	2	DIRECT 02 vlv - OPEN (CCW)	7	Suit circuit isolated from cabin atmosphere by differential pressure; also commences purge of suit circuit.
	3	Cabin dump unnecessary		
		SUIT CKT RET VLV - PUSH TO CLOSE	380	Mechanically isolates suit circuit from cabin atmosphere.
		DIRECT 02 vlv - close (CW)	7	

STA/T	STEP	PROCEDURE	PANEL	REMARKS
	4	Cabin dump necessary		
CDR		DIRECT 02 vlv - close (CW)	7	
CMP		EMER CAB PRESS vlv - OFF	351	
		CAB REPRESS vlv - close (CCW)		
CDR		CAB PRESS RELF (RH) - DUMP (safety latch off)	325	Approximately 2 minutes required to dump cabin.
		SUIT CKT RET VLV - PUSH TO CLOSE	380	Mechanically isolates suit circuit from cabin atmosphere.
	5.3.1.3	Contamination in Suit		Contamination originates within the suit circuit if, after purging with oxygen, contamination is still present.
	1	DIRECT 02 vlv - OPEN (CCW)	7	Provides oxygen and small amount of suit ventilation.
LMP	2	SUIT COMPR (both) - OFF	4	Prevents contamination from reaching suits, but decreases suit ventilation. Suit compressor C/W light will come on.
	5.3.1.4	Cabin Decompression		An emergency condition exists if any crewman is unsuited at time of cabin decompression.
ALL	1	Unsuited crewmen don PGAs		
CMP	2	After last crewman suited		
		EMER CAB PRESS vlv - OFF	351	
		CAB REPRESS vlv - close (CCW)		
	5.3.1.5	LET Fails to Jettison		
		a. Tower legs cut/no jettison motor ignition		

STA/T	STEP	PROCEDURE	PANEL	REMARKS
CDR		LES MOTOR FIRE pb - push	1	Guarded.
		If tower jettison successful		
		Continue mission		
		If tower jettison unsuccessful		
CMP		ABRT SYS TWR JETT (2) - OFF	2	Guarded. ABRT SYS TWR JETT switches must be in OFF position while initiating SPS abort to insure against CSM separation.
CDR		THC - CCW (4.0 sec min)		Commands CSM/SLA separation, BECO and direct ullage.
		+X translate for _____ sec		
		-X translate for _____ sec		
		(back away from LET)		
		Perform MODE II SPS ABORT, para 5.1.2.1		
	b.	No response to ABRT SYS TWR JETT switches		
		Verify the following		
		cb SECS ARM (2) - close	8	
		cb SECS LOGIC (2) - close		
		cb EDS (3) - close		
		SECS LOGIC (both) - on (up)		Lever lock.
		SECS PYRO ARM (2) - on (up)		Lever lock.
		EDS PWR - on (up)	7	
CMP		ABRT SYS TWR JETT (both) - on (up)	2	Guarded. On position is momentary.
CDR		If tower jettison successful		
		Continue mission		
		If tower jettison unsuccessful		
		ABRT SYS TWR JETT (both) - AUTO		
		Perform MODE 1C LES ABORT, para 5.1.1.3		Tower jettison occurs automatically at closure of 24K baroswitches.
	5.3.2	PAD EMERGENCY PROCEDURES - TBD		

APPENDIX B

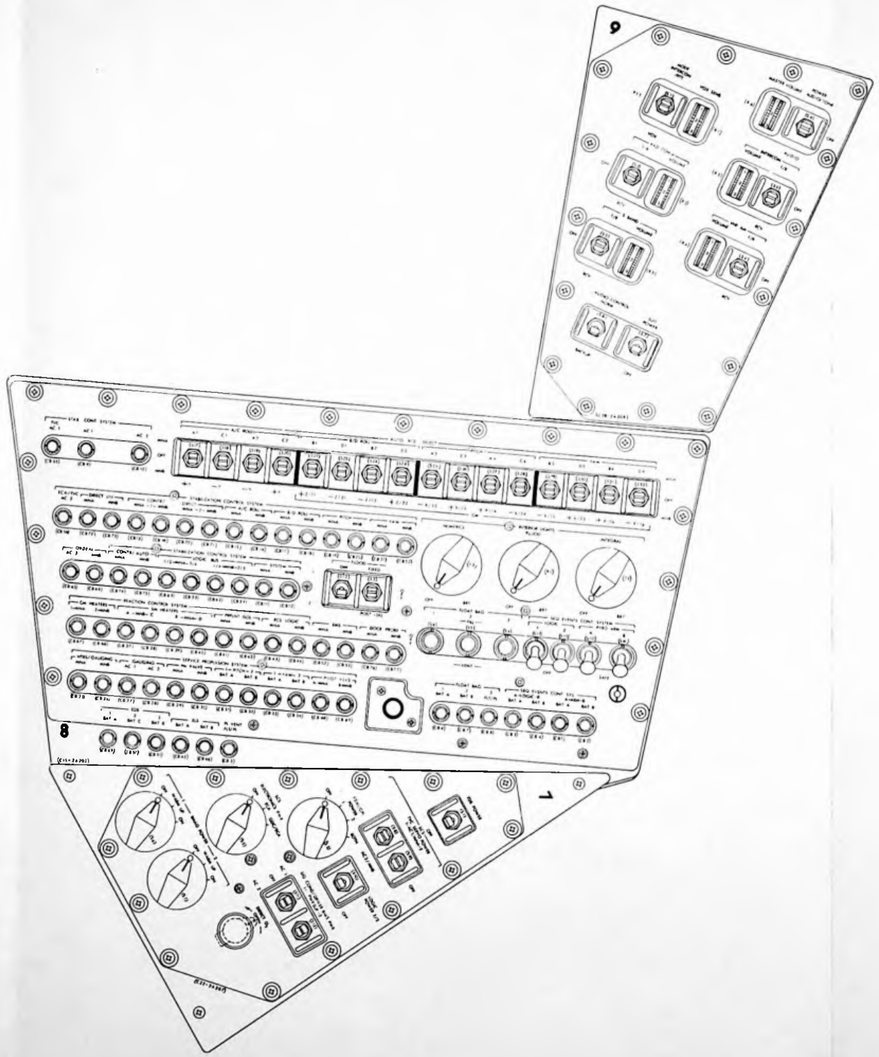
9
8
7


15
14000.0
ABORT

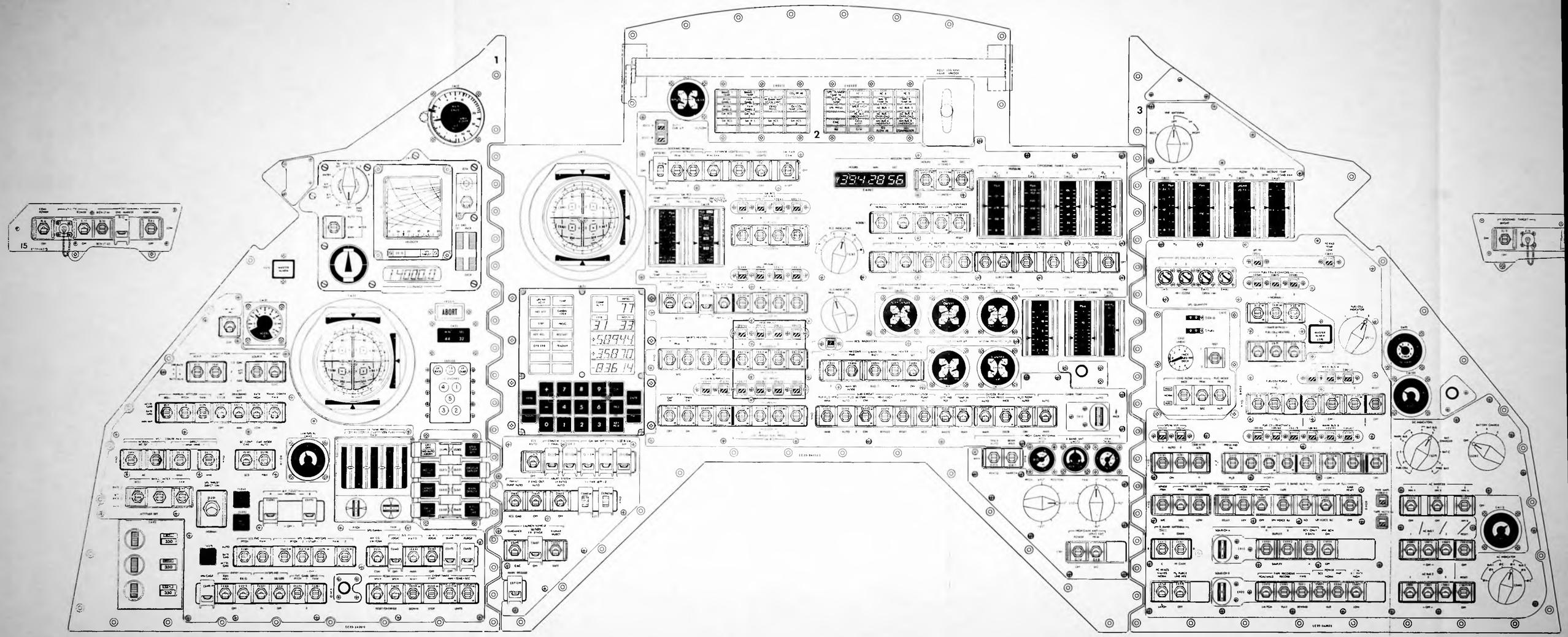
1
2
3
15
ABORT

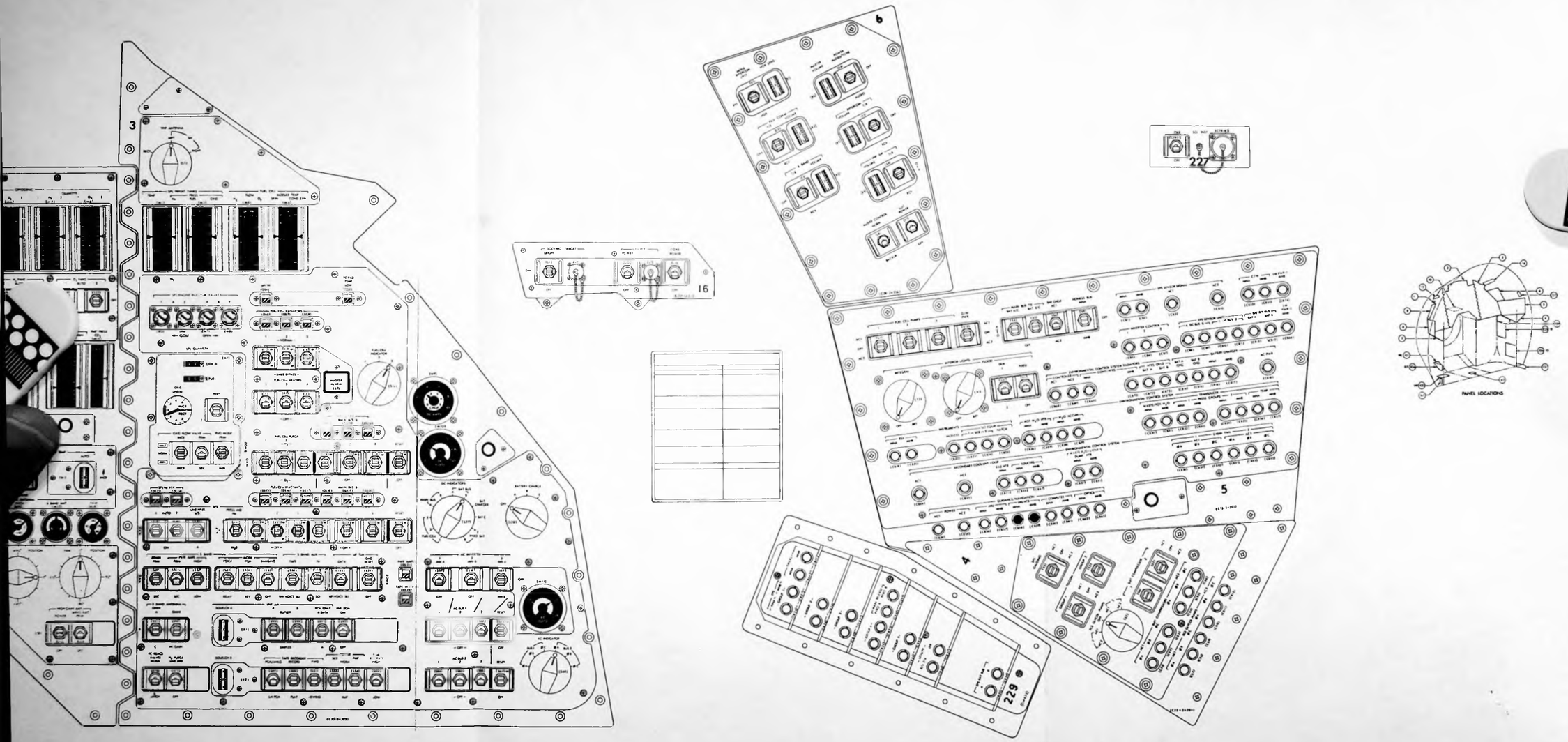

Figure B-1. Crew Displays and Controls

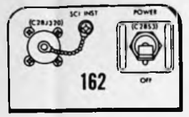

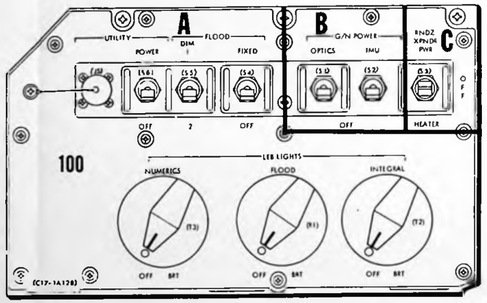

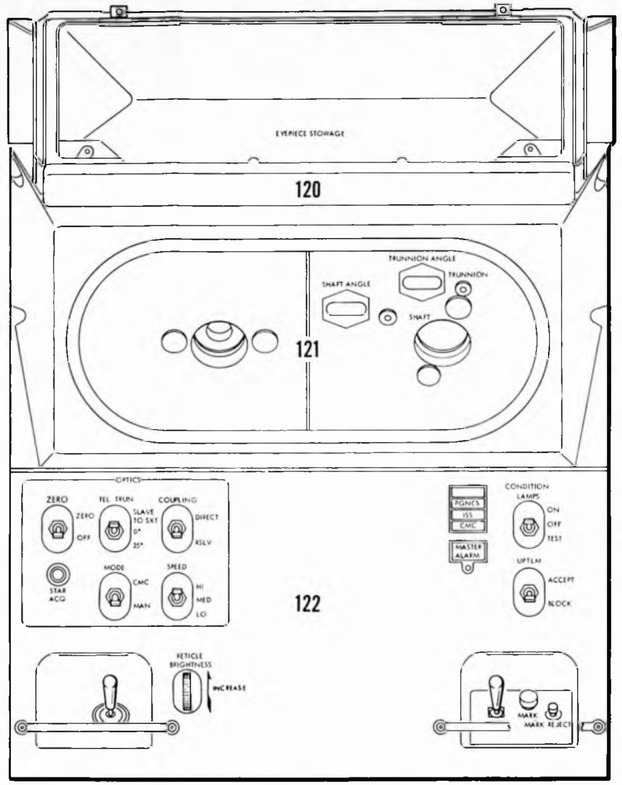

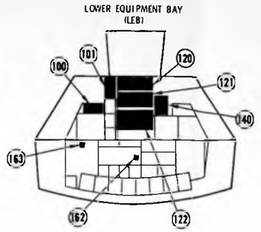

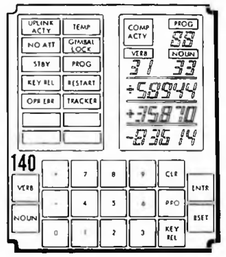

LEB INDEX		
PANEL NO.	CONTROL OR DISPLAY	SYSTEM
100A	LIGHTING CONTROL PANEL	MISC
100B	LIGHTING CONTROL PANEL	G&N
100C	LIGHTING CONTROL PANEL	COMM
101A	AUXILIARY TEST PANEL	COMM, EPS & SPS
101B	AUXILIARY TEST PANEL	RCS
101C	AUXILIARY TEST PANEL	MISC
120	EYEPIECE STOWAGE UNIT	G&N
121	OPTICS PANEL	G&N
122	CONTROL PANEL	G&N
140	LEB CM COMPUTER DISPLAY KEYBOARD	G&N
162	COMPT A SCI/EQUIP ELEC DISC	MISC
163	COMPT C SCI/EQUIP ELEC DISC	MISC

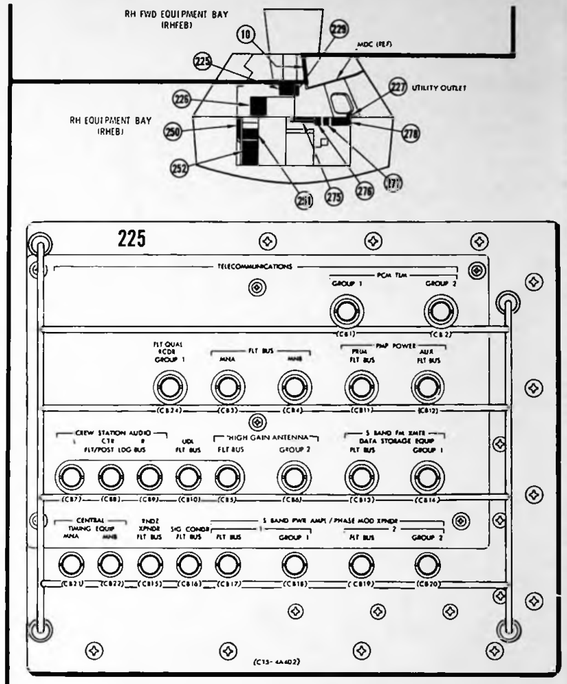

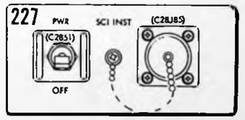

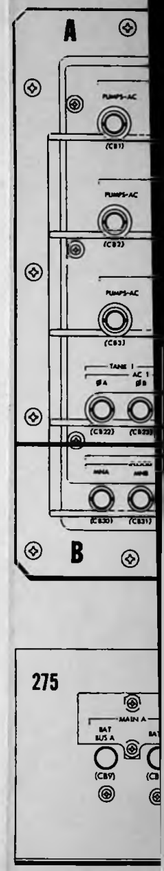

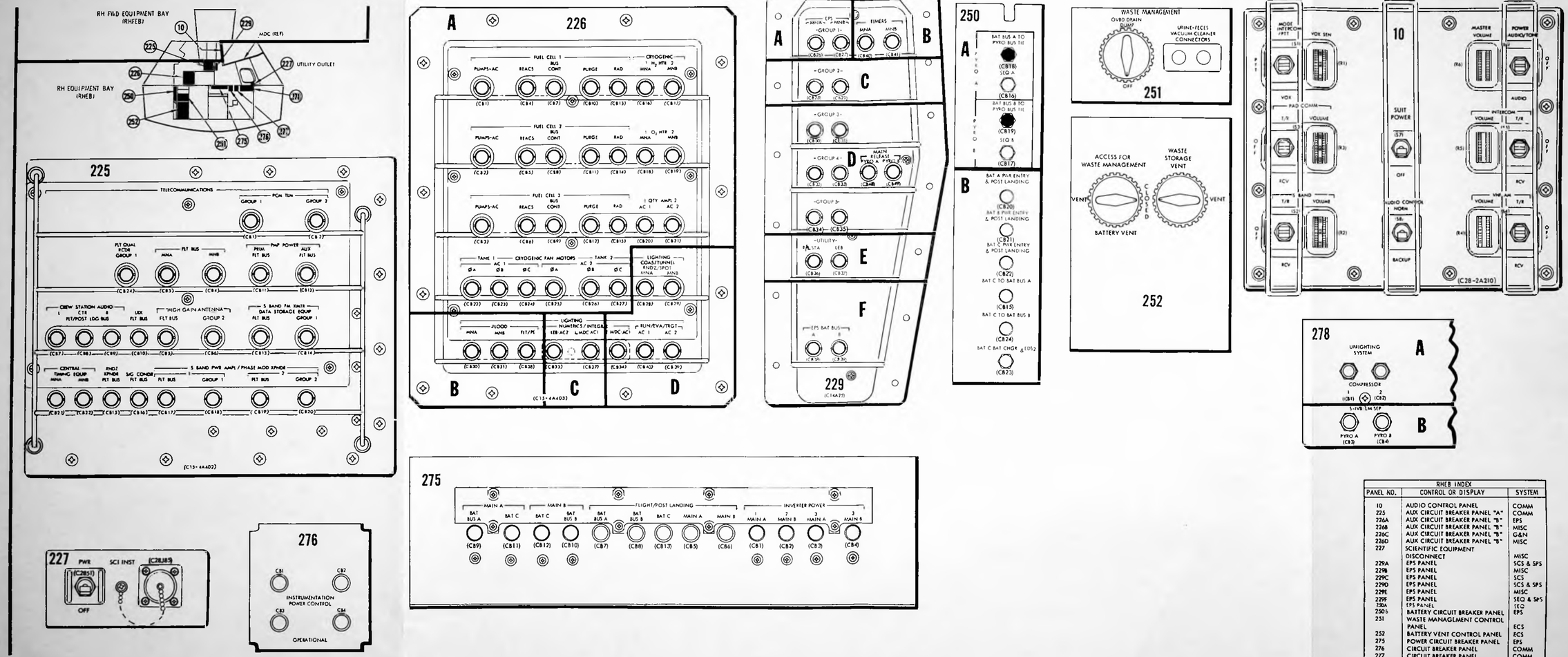

RHEB INDEX		
PANEL NO.	CONTROL OR DISPLAY	SYSTEM
10	AUDIO CONTROL PANEL	COMM
225	AUX CIRCUIT BREAKER PANEL "A"	COMM
226A	AUX CIRCUIT BREAKER PANEL "B"	EPS
226B	AUX CIRCUIT BREAKER PANEL "B"	MISC
226C	AUX CIRCUIT BREAKER PANEL "B"	G&N
226D	AUX CIRCUIT BREAKER PANEL "B"	MISC
227	SCIENTIFIC EQUIPMENT DISCONNECT	MISC
229A	EPS PANEL	SCS & SPS
229B	EPS PANEL	MISC
229C	EPS PANEL	SCS
229D	EPS PANEL	SCS & SPS
229E	EPS PANEL	MISC
229F	EPS PANEL	SEQ & SPS
250A	EPS PANEL	SEQ
250B	BATTERY CIRCUIT BREAKER PANEL	EPS
251	WASTE MANAGEMENT CONTROL PANEL	ECS
252	BATTERY VENT CONTROL PANEL	ECS
275	POWER CIRCUIT BREAKER PANEL	EPS
276	CIRCUIT BREAKER PANEL	COMM
277	CIRCUIT BREAKER PANEL	COMM
278A	UPRIGHTING SYSTEM PANEL	MISC
278B	UPRIGHTING SYSTEM PANEL	SEQ

SM-2A-553A

Figure B-2. Crew Displays and Controls

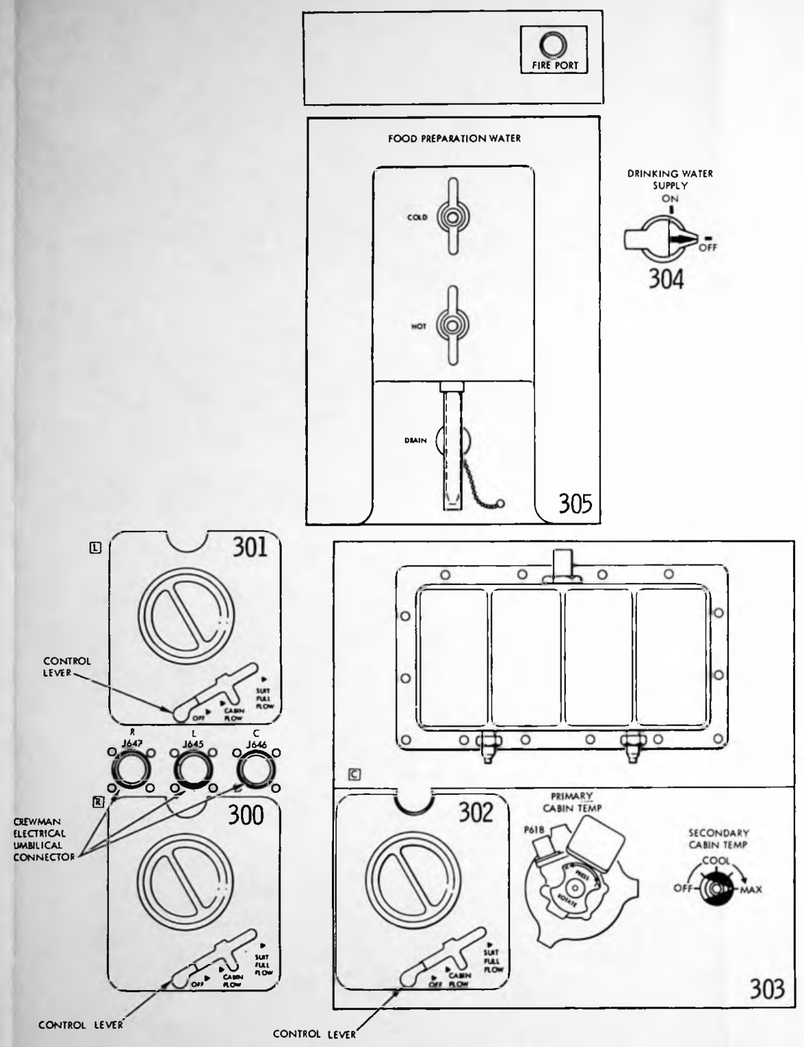

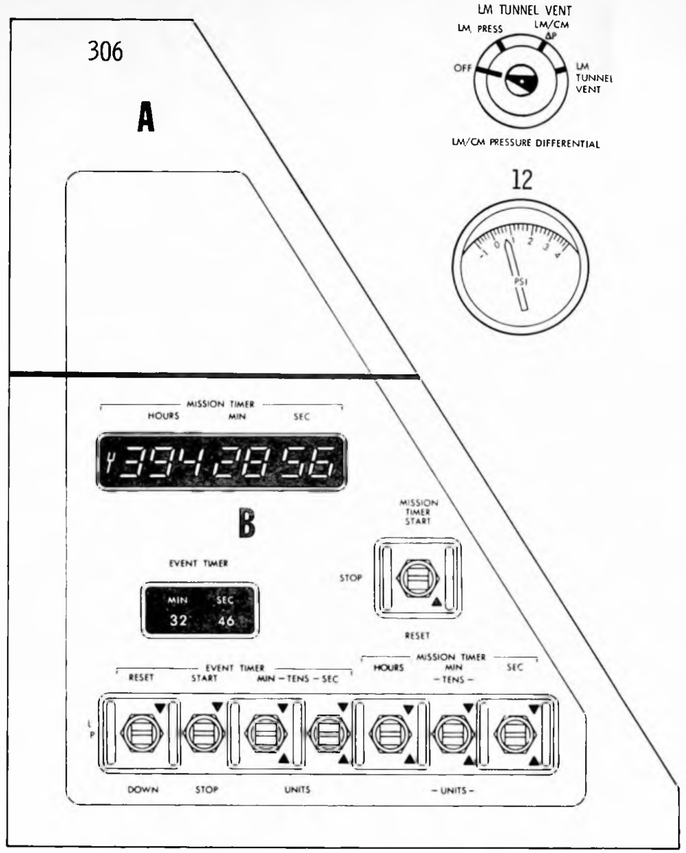

LHFEB INDEX		
PANEL NO.	CONTROL OR DISPLAY	SYSTEM
12	C/M PRESSURE DIFFERENTIAL PANEL (LH MDC CLOSE-OUT PANEL)	ECS
300	SUIT FLOW VALVE	ECS
301	SUIT FLOW VALVE	ECS
302	SUIT FLOW VALVE	ECS
303	CABIN TEMPERATURE CONTROL PANEL	ECS
304	DRINKING WATER SUPPLY SHUTOFF VALVE	ECS
305	FOOD PREPARATION WATER SUPPLY UNIT	ECS
306A	MISSION & EVENT TIMER PANEL	DKG
306B	MISSION & EVENT TIMER PANEL	MISC
R, L&C	CREWMAN UMBILICAL CONNECTORS (3)	MISC

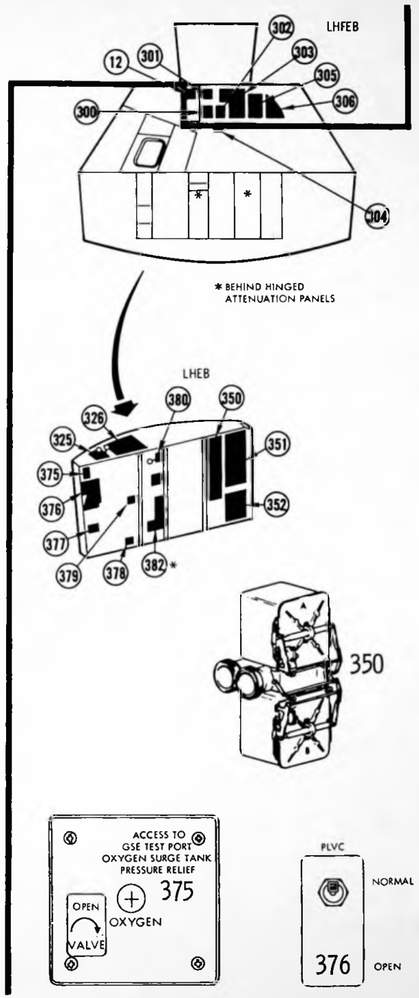

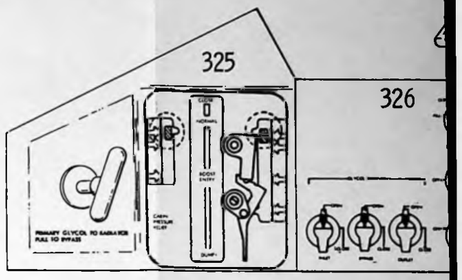

LHEB INDEX		
PANEL NO.	CONTROL OR DISPLAY	SYSTEM
325	CABIN PRESSURE RELIEF CONTROLS	ECS
326	GIRTH SHELF OXYGEN & GLYCOL CONTROLS	ECS
350	CO_2 CANISTER DIVERTER VALVE	ECS
351	OXYGEN CONTROL PANEL	ECS
352	WATER GLYCOL PANEL	ECS
375	SURGE TANK PRESSURE RELIEF SHUTOFF VALVE	ECS
376	PLVC CONTROL PANEL	ECS
377	GLYCOL TO RADIATOR CONTROL PANEL	ECS
378	ACCUMULATOR ISOLATION VALVE	ECS
379	RESERVOIR ACCUMULATOR FILL VALVE	ECS
380 *	O_2 DEMAND REGULATOR VALVE AND SUIT CIRCUIT RETURN SHUTOFF VALVE	ECS
382 *	COOLANT CONTROL PANEL	ECS

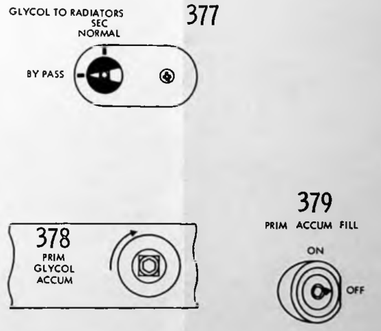

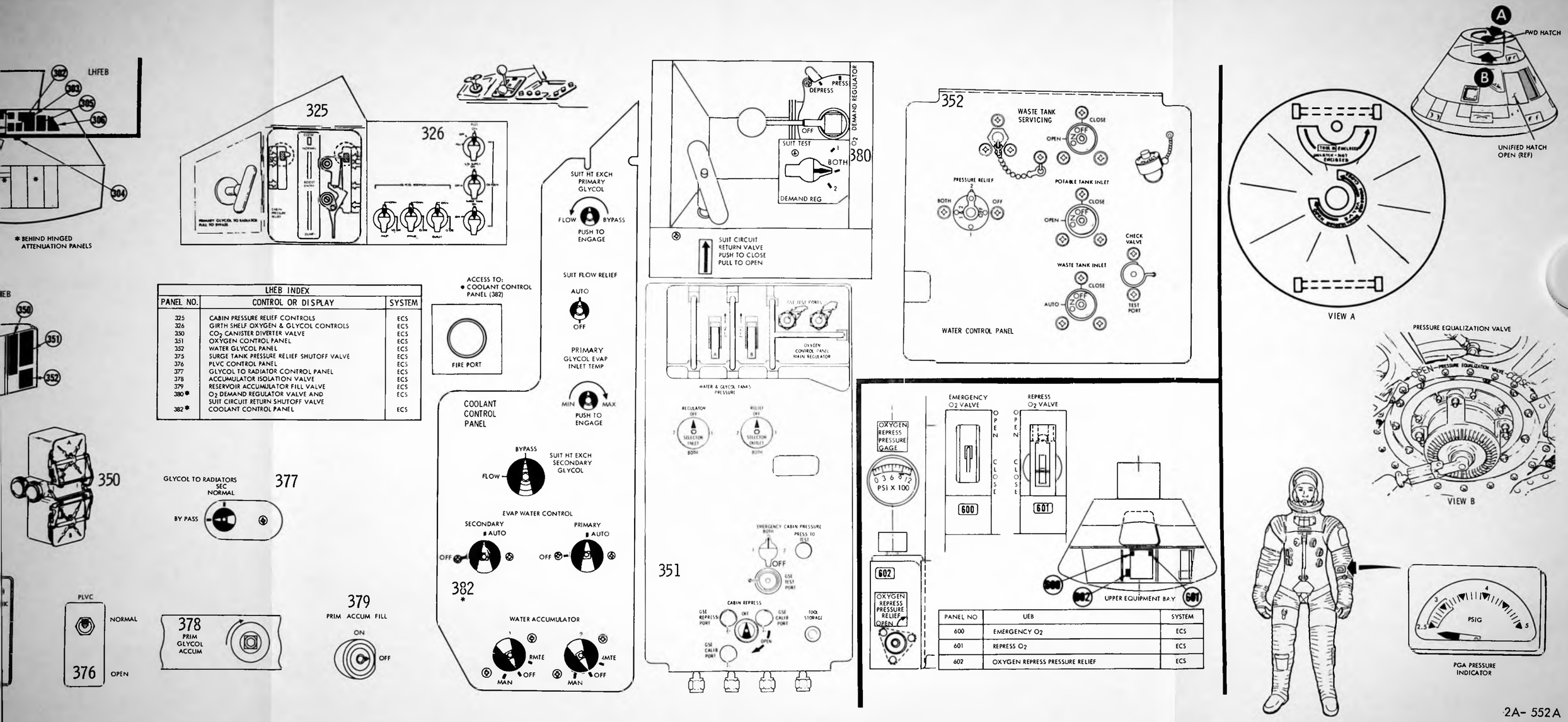

LHEB INDEX		
PANEL NO.	CONTROL OR DISPLAY	SYSTEM
325	CABIN PRESSURE RELIEF CONTROLS	ECS
326	GIRTH SHELF OXYGEN & GLYCOL CONTROLS	ECS
350	CO_2 CANISTER DIVERTER VALVE	ECS
351	OXYGEN CONTROL PANEL	ECS
352	WATER GLYCOL PANEL	ECS
375	SURGE TANK PRESSURE RELIEF SHUTOFF VALVE	ECS
376	PLVC CONTROL PANEL	ECS
377	GLYCOL TO RADIATOR CONTROL PANEL	ECS
378	ACCUMULATOR ISOLATION VALVE	ECS
379	RESERVOIR ACCUMULATOR FILL VALVE	ECS
380 *	O_2 DEMAND REGULATOR VALVE AND SUIT CIRCUIT RETURN SHUTOFF VALVE	ECS
382 *	COOLANT CONTROL PANEL	ECS

Figure B-3. Crew Displays and Controls

APPENDIX C

FLIGHT OPERATIONAL CHECKLIST DEVELOPMENT

The CSM Apollo Operations Handbook Procedures are formated so as to make possible direct development of flight operational checklist material.

Figures C-1 through C-3 indicate a method of arranging material from the procedures column of the normal/backup and contingency sections of the AOH to provide three relatively compact and convenient checklists ordered and oriented to specific Apollo mission phases. Material is arranged to provide a minimum of redundancy and cross referencing, while at the same time allowing optimum procedure sequencing for each phase.

The LAUNCH CHECKLIST, figure C-1, contains flight crew procedures from prime crew ingress through translunar injection, including aborts and applicable pad and flight emergency procedures.

Backup crew prelaunch procedures can be made a carry-off item at the time of backup crew egress and are therefore not included. Prime crew prelaunch procedures could conceivably be excluded as well from the launch checklist by use of task communication to the crew via hardline.

The ORBITAL OPERATIONS CHECKLIST, figure C-2 includes CSM/LM/SIVB interface, rendezvous, formation flight, docking and docked operations, and flight emergency procedures for use during all phases of Earth-Lunar orbital operations.

The ENTRY CHECKLIST, figure C-3, includes preparation for deorbit and entry through postlanding procedures including flight emergency procedures and postlanding emergency procedures, if any.

The SUPPORT PROCEDURES and DATA (SPAD), detailed in figure C-4, includes G&C reference data, subprocedures, mode selection, and vehicle system management procedures used in conjunction with orbital operations and in preparation for deorbit and entry.

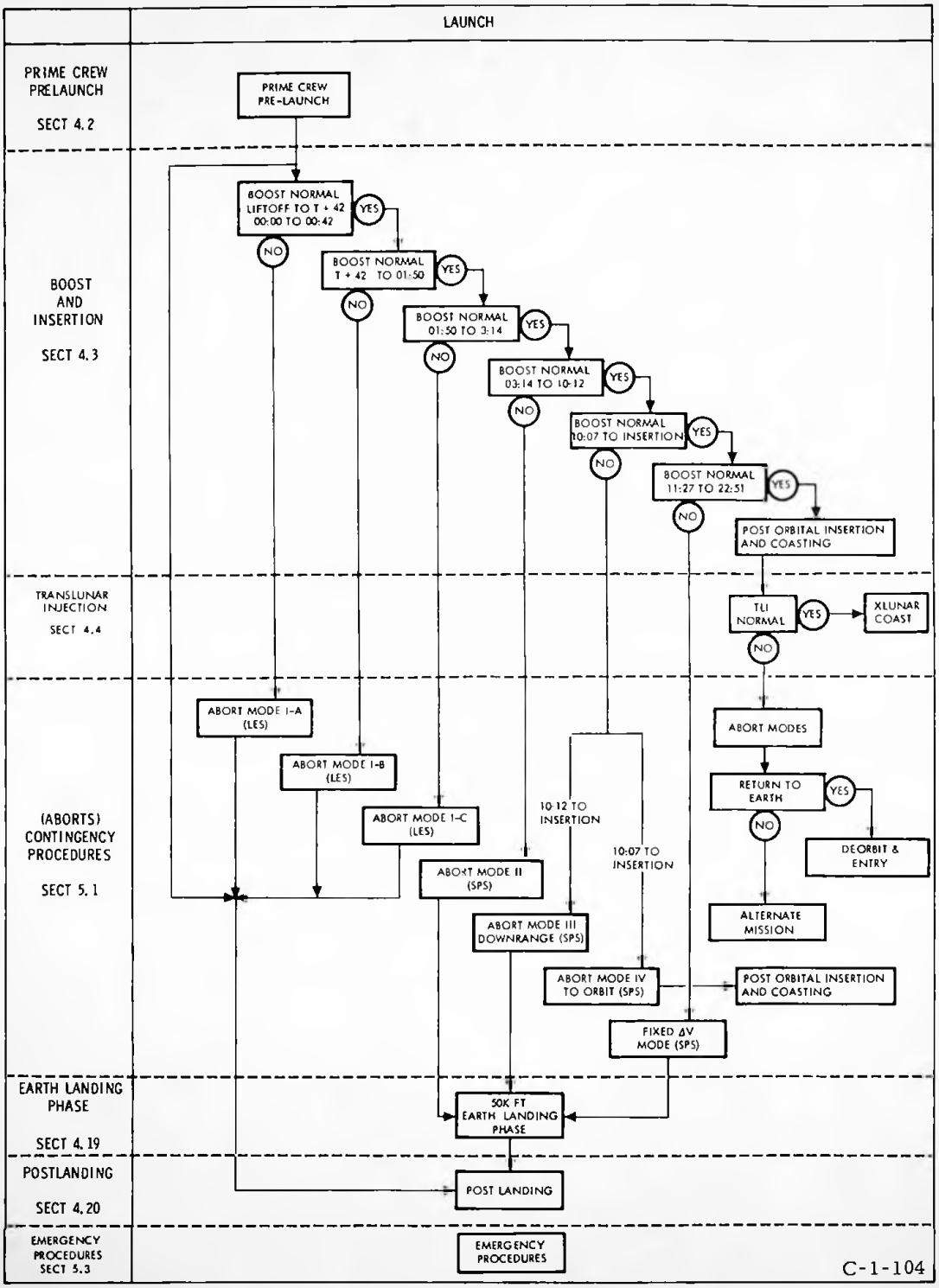
LAUNCH
PRIME CREW PRELAUNCH
SECT 4.2
PRIME CREW PRE-LAUNCH
BOOST AND INSERTION
SECT 4.3
BOOST NORMAL LIFTOFF TO T + 42 00:00 TO 00:42
YES
NO
BOOST NORMAL T + 42 TO 01:50
BOOST NORMAL 01:50 TO 3:14
BOOST NORMAL 03:14 TO 10:12
BOOST NORMAL 10:07 TO INSERTION
BOOST NORMAL 11:27 TO 22:51
POST ORBITAL INSERTION AND COASTING
TRANSLUNAR INJECTION
SECT 4.4
TLI NORMAL
XLUNAR COAST
(ABORTS) CONTINGENCY PROCEDURES
SECT 5.1
ABORT MODE I-A (LES)
ABORT MODE I-B (LES)
ABORT MODE I-C (LES)
ABORT MODE II (SPS)
ABORT MODE III DOWNRANGE (SPS)
ABORT MODE IV TO ORBIT (SPS)
FIXED ΔV MODE (SPS)
10:12 TO INSERTION
10:07 TO INSERTION
ABORT MODES
RETURN TO EARTH
DEORBIT & ENTRY
ALTERNATE MISSION
EARTH LANDING PHASE
SECT 4.19
50K FT EARTH LANDING PHASE
POSTLANDING
SECT 4.20
POST LANDING
EMERGENCY PROCEDURES SECT 5.3
EMERGENCY PROCEDURES
C-1-104

Figure C-1

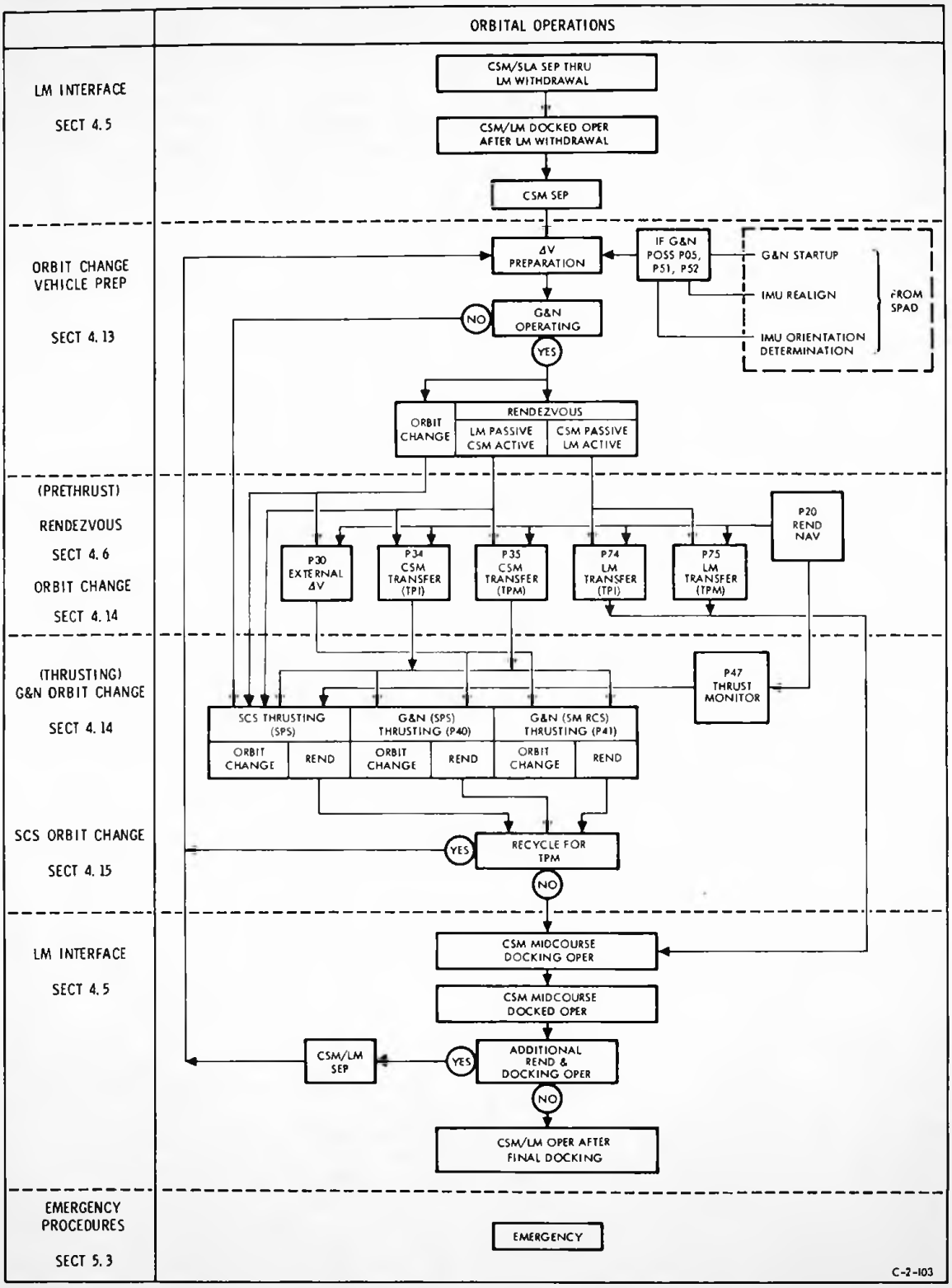
ORBITAL OPERATIONS
LM INTERFACE
SECT 4.5
CSM/SLA SEP THRU LM WITHDRAWAL
CSM/LM DOCKED OPER AFTER LM WITHDRAWAL
CSM SEP
ORBIT CHANGE VEHICLE PREP
SECT 4.13
ΔV PREPARATION
IF G&N POSS P05, P51, P52
G&N STARTUP
IMU REALIGN
IMU ORIENTATION DETERMINATION
FROM SPAD
NO
G&N OPERATING
YES
ORBIT CHANGE
RENDEZVOUS
LM PASSIVE CSM ACTIVE
CSM PASSIVE LM ACTIVE
(PRETHRUST)
RENDEZVOUS
SECT 4.6
ORBIT CHANGE
SECT 4.14
P20 REND NAV
P30 EXTERNAL ΔV
P34 CSM TRANSFER (TPI)
P35 CSM TRANSFER (TPM)
P74 LM TRANSFER (TPI)
P75 LM TRANSFER (TPM)
(THRUSTING) G&N ORBIT CHANGE
SECT 4.14
P47 THRUST MONITOR
SCS THRUSTING (SPS)
G&N (SPS) THRUSTING (P40)
G&N (SM RCS) THRUSTING (P41)
ORBIT CHANGE
REND
ORBIT CHANGE
REND
ORBIT CHANGE
REND
SCS ORBIT CHANGE
SECT 4.15
YES
RECYCLE FOR TPM
NO
LM INTERFACE
SECT 4.5
CSM MIDCOURSE DOCKING OPER
CSM MIDCOURSE DOCKED OPER
CSM/LM SEP
YES
ADDITIONAL REND & DOCKING OPER
NO
CSM/LM OPER AFTER FINAL DOCKING
EMERGENCY PROCEDURES
SECT 5.3
EMERGENCY
C-2-103

Figure C-2

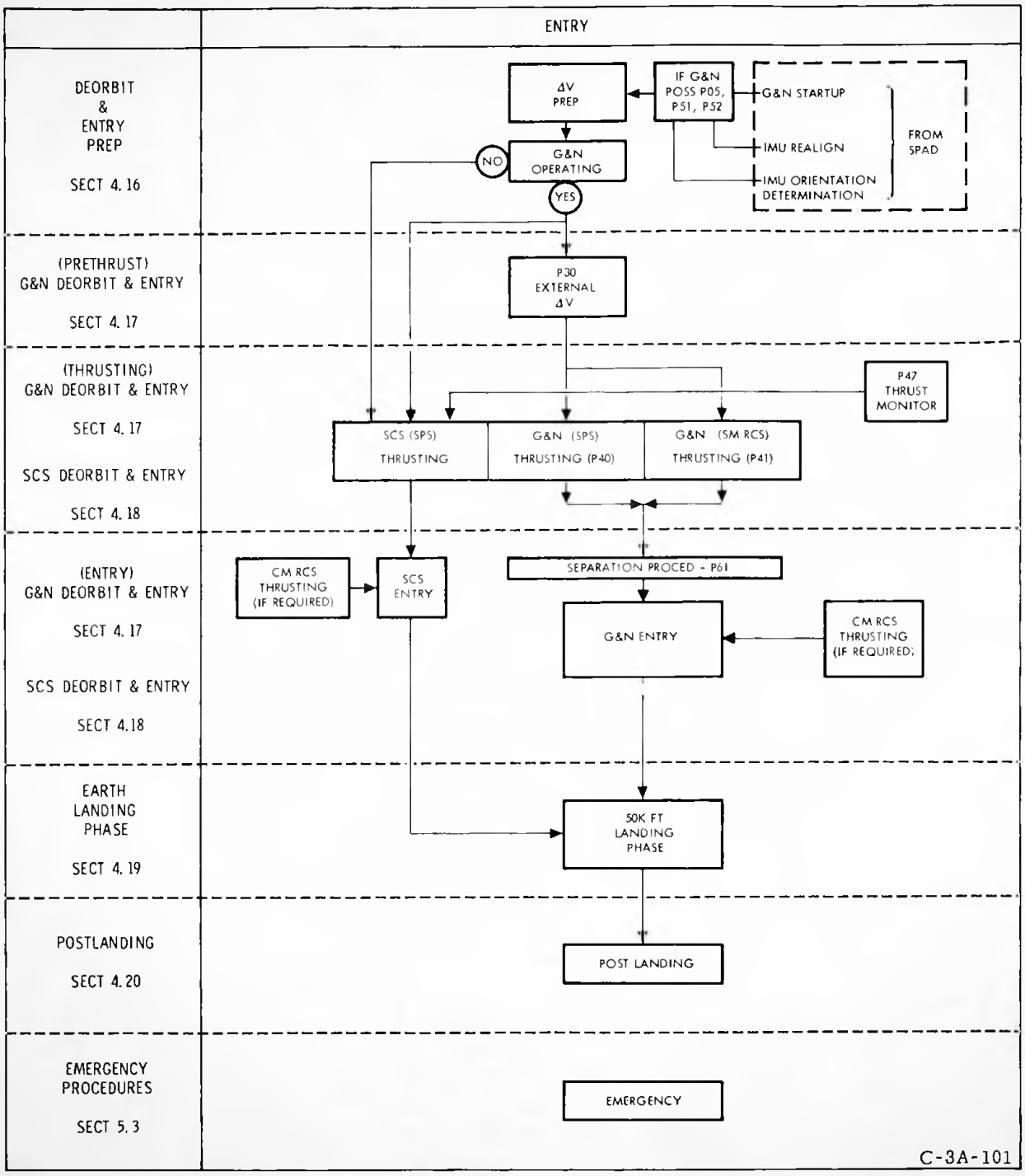
ENTRY
DEORBIT & ENTRY PREP
SECT 4.16
ΔV PREP
IF G&N POSS P05, P51, P52
G&N STARTUP
IMU REALIGN
IMU ORIENTATION DETERMINATION
FROM SPAD
NO
G&N OPERATING
YES
(PRETHRUST) G&N DEORBIT & ENTRY
SECT 4.17
P30 EXTERNAL ΔV
(THRUSTING) G&N DEORBIT & ENTRY
SECT 4.17
SCS DEORBIT & ENTRY
SECT 4.18
P47 THRUST MONITOR
SCS (SPS) THRUSTING
G&N (SPS) THRUSTING (P40)
G&N (SM RCS) THRUSTING (P41)
(ENTRY) G&N DEORBIT & ENTRY
SECT 4.17
SCS DEORBIT & ENTRY
SECT 4.18
CM RCS THRUSTING (IF REQUIRED)
SCS ENTRY
SEPARATION PROCED - P61
G&N ENTRY
CM RCS THRUSTING (IF REQUIRED)
EARTH LANDING PHASE
SECT 4.19
50K FT LANDING PHASE
POSTLANDING
SECT 4.20
POST LANDING
EMERGENCY PROCEDURES
SECT 5.3
EMERGENCY
C-3A-101

Figure C-3

SUPPORT PROCEDURES AND DATA			
REFERENCE DATA SECT 4.8	G&C GENERAL INSTRUCTIONS RATE & DEADBAND SELECT LOGIC RCS ENG, VENT & RADIATOR LOCATIONS LOGIC BUS PWR DISTR. LIMITED USE CONTROLS	G&N OPERATIONS • CSS/ISS INTERFACE • DSKY OPERATIONS • OPTICS MECHANIZATION VERB LIST NOUN LIST STAR LIST	CHECKLIST CODES OPTION CODES ALARM CODES CMC PROGRAM—ROUTINE INDEX • PROGRAMS • ROUTINES • CMC FLAG LISTINGS
G&C REFERENCE MODES SECT 4.9	ATTITUDE CONTROL MODES • CHANNEL SELECTION • SCS MINIMUM IMPULSE • SCS ACCELERATION COMMAND • SCS ATTITUDE HOLD/RATE COMMAND • CMC ACCEL CMD/MIN IMP • CMC ATT CONTR-AUTO/HOLD • SIVB ATT CONTR DISPLAY MODES • DYNAMIC DISPLAY MONITOR • RATE DISPLAY • ERROR DISPLAY (BMAG, CMC, ATT SET SOURCE) • TOTAL ATTITUDE DISPLAY • ORDEAL-LCL HORIZ ATT GDC ALIGN		TVC MODES • SPS THRUSTING • TVC INITIALIZATION • SPS GMBL CONTR • THRUST ON-OFF CONTR OPTICS CONTROL • AUTO OPT POSITIONING • MAN OPT CONTR • MAN OPT DRIVE ENTRY MONITOR SYSTEM (EMS) • ΔV TEST • ΔV SETUP • RSI ALIGN • ENTRY TEST • RANGE IND & V_o SETUP
G&C GENERAL PROCEDURES SECT 4.10	G&N GENERAL • P00 (IDLING) • G&N STARTUP PROCEDURE • P06 (ISS/CMC PWR DOWN) • OPT PWR CONTR • P27 (UPDATE) • R03 (DAP DATA LOAD) • RCS DAP ATT DBD REDUCTION • DAP ACTIVATION • R62 (CREW DEFINED MANEUVER) • DSKY, CMC CHECKS • DSKY COND LT TEST		• MEASUREMENT & LOAD OF PIPA BIAS • EXTENDED VERB CALLUPS • CMC/LGC CLOCK SYNC (R33) SCS GENERAL • SCS PWR DOWN • SCS PWR UP • DRIFT RATE ADJUST • MIN PWR SCS ATT HOLD (2 OR 3 AXES) • SCS ATT MANEUVER • GDC ALIGNMENT TO IMU • ATT REF SYSTEM ALIGN • ORDEAL INITIALIZATION
COASTING SECT 4.12	• GROUND TRACK DETERMINATION (P21) • ORBITAL NAVIGATION (P22) • CISLUNAR MIDCOURSE NAVIGATION (P23) • ORBIT PARAMETER DISPLAY (R30) • LUNAR LMK SELECTION (R35)		
ALIGNMENTS SECT 4.11	• ORIENTATION DETERM (P51) • IMU REALIGN (P52) • ALTERNATE LOS IMU ORIENT DETERM (P53) • ALTERNATE LOS IMU REALIGN (P54) • ALTERNATE SC INERTIAL ATT DETERM & GDA ALIGN • BACKUP GDC AND/OR IMU ALIGN		• INFLIGHT COAS CALIB • INPLANE GDC ALIGN • ZERO ICDU EXT VERB (V40 N20) • COARSE ALIGN ICDU EXT VERB (V41 N20) • COARSE ALIGN OCDU EXT VERB (V41 N91)
SYSTEMS MANAGEMENT SECT 4.7		PROPULSION • SPS • RCS EPS ECS	C&WS TELECOM PWR DOWN CONFIG LIMITED USE CB's

C-4-104

Figure C-4