VIN SLAMA

SM6T-2-02

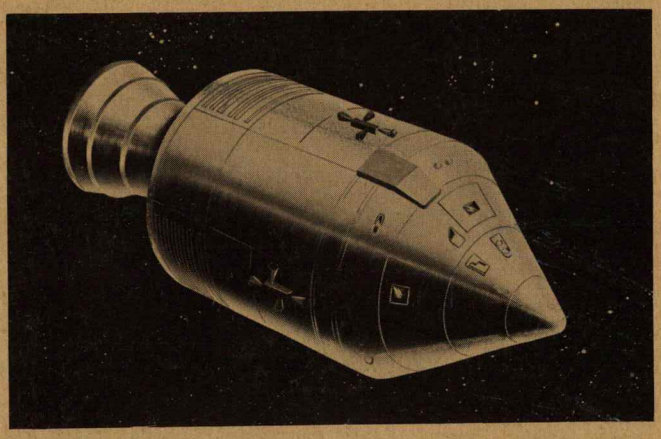

SID 65-974-1

APOLLO MISSION SIMULATOR

INSTRUCTOR HANDBOOK

Volume I

DESCRIPTION and UTILIZATION

SPACECRAFT 012

NORTH AMERICAN AVIATION, INC.
SPACE and INFORMATION SYSTEMS DIVISION
TRAINING and SUPPORT DOCUMENTATION D/671

April 1966

SM6T-2-02

APOLLO MISSION SIMULATOR

INSTRUCTOR HANDBOOK

(SPACECRAFT 012 CONFIGURATION)

VOLUME I: DESCRIPTION AND UTILIZATION

Contract NAS9-150
Exhibit I; Paragraph 10.6

PREPARED BY NORTH AMERICAN AVIATION, INC.
SPACE AND INFORMATION SYSTEMS DIVISION
TRAINING AND SUPPORT DOCUMENTATION
DEPARTMENT 671

PUBLISHED UNDER AUTHORITY OF THE NATIONAL AERONAUTICS AND SPACE ADMINISTRATION

SID 65-974-1

15 APRIL 1966

LIST OF EFFECTIVE PAGES

NOTE: The portion of the text affected by the current changes is indicated by a vertical line in the outer margins of the page.

TOTAL NUMBER OF PAGES IN THIS PUBLICATION IS 686, CONSISTING OF THE FOLLOWING:

Page No.

Title
A
iii thru xxii
1-1 thru 1-338
2-1 thru 2-164
3-1 thru 3-160
A-1 thru A-2

*The asterisk indicates pages changed, added, or deleted by the current change.

Manuals will be distributed as directed by the NASA Apollo Program Office. All requests for manuals should be directed to the NASA Apollo Spacecraft Program Office at Houston, Texas.

TECHNICAL REPORT INDEX/ABSTRACT

ACCESSION NUMBER							DOCUMENT SECURITY CLASSIFICATION	
							UNCLASSIFIED	

TITLE OF DOCUMENT
APOLLO MISSION SIMULATOR INSTRUCTOR HANDBOOK

LIBRARY USE ONLY

AUTHOR(S)
OPERATIONS HANDBOOKS GROUP

CODE	ORIGINATING AGENCY AND OTHER SOURCES	DOCUMENT NUMBER
NAJ65231	Space and Information Systems Division of NAA, Downey, California	SM6T-2-02

PUBLICATION DATE	CONTRACT NUMBER
15 APRIL 1966	NAS 9-150 EXHIBIT I, PARAGRAPH 10.6

DESCRIPTIVE TERMS
Consists of two volumes, this being Volume I. This volume is comprised of three sections. Section 1 provides description of the Apollo Mission Simulator. Section 2 describes simulation of spacecraft systems in the Apollo Mission Simulator. Section 3 explains training applications of the simulator and instructor handbook and describes the AMS Training Syllabus.

ABSTRACT

This handbook is Volume I of the Apollo Mission Simulator Instructor Handbook to be used by the NASA Instructors in operating the simulator for training purposes. This volume provides an instructor oriented description of the simulator and procedures for using the simulator (and AMS Instructor Handbook) in accomplishing flight crew training with the simulator.

FOREWORD

Paragraph 10.6 of Exhibit I to Contract NAS9-150 specifies that NAA shall provide a trainer instructor handbook that supports NASA conducted training associated with the Apollo Mission Simulator. This book is Volume I of a two-volume instructor handbook in compliance with the exhibit. The contents of this handbook is based on the Spacecraft 012 configuration established for simulator design data purposes at the Simulator Preliminary Design Review of August 19, 1965. Mission data used in preparing this handbook was that provided for Apollo Mission 204A in MSC Internal Note 65-FM-58 of April 26, 1965. A previous and preliminary edition of the handbook was addressed to the simulator initial delivered configuration and Apollo Mission 204A as defined in MSC Internal Note 65-FM-16.

TABLE OF CONTENTS

Section		Title	Page
	INTRODUCTION		xxi
1	DESCRIPTION		1-1
	1.1	General Description	1-1
	1.1.1	Major Units and Systems	1-3
	1.1.2	Facilities and Utilities	1-3
	1.1.2.1	Power Requirements	1-3
	1.1.2.2	Utility Power	1-3
	1.1.2.3	Simulator Power	1-3
	1.1.2.4	Air Conditioning	1-13
	1.1.2.5	Compressed Air	1-13
	1.1.2.6	Water	1-13
	1.2	Simulated Command Module (SCM)	1-14
	1.2.1	Crew Compartment	1-14
	1.2.2	SCM Controls and Displays	1-23
	1.2.3	Visual Simulation Mechanisms	1-27
	1.2.4	Structures and Vertical Insertion	1-29
	1.3	Instructor-Operator Station	1-31
	1.3.1	Main Display Panel (SCM-IOS)	1-53
	1.3.1.1	Barometer Altimeter Panel	1-53
	1.3.1.2	S/C Panel No. 2	1-55
	1.3.1.3	S/C Panel No. 3	1-57
	1.3.1.4	Flight Director Attitude Indicator	1-60
	1.3.1.5	S/C Panel No. 5	1-62
	1.3.1.6	Attitude Set/Gimbal Position Indicator Panel	1-66
	1.3.1.7	Delta V Panel	1-68
	1.3.1.8	S/C Panel No. 8	1-71
	1.3.1.9	S/C Panel No. 10	1-77
	1.3.1.10	S/C Panel No. 11	1-80
	1.3.1.11	S/C Panel No. 12	1-84
	1.3.1.12	S/C Panel No. 13	1-86
	1.3.1.13	AGC Display and Keyboard	1-96
	1.3.1.14	S/C Panel No. 15	1-100
	1.3.1.15	S/C Panel No. 16	1-104
	1.3.1.16	S/C Panel No. 17	1-108
	1.3.1.17	S/C Panel No. 18	1-111
	1.3.1.18	S/C Panel No. 19	1-120
	1.3.1.19	S/C Panel No. 20	1-123
	1.3.1.20	S/C Panel No. 21	1-133
	1.3.1.21	S/C Panel No. 22	1-137
	1.3.1.22	S/C Panel No. 23	1-153
	1.3.1.23	S/C Panel No. 24	1-157
	1.3.1.24	S/C Panel No. 25	1-161

Section	Title	Page
1.3.1.25	S/C Panel No. 26	1-169
1.3.2	Lower Equipment Bay (SCM-IOS)	1-173
1.3.2.1	G&N Annunciator Panel	1-173
1.3.2.2	Optics Panel	1-176
1.3.2.3	LEB Floodlight Panel	1-178
1.3.2.4	LEB G&N Panel	1-181
1.3.2.5	IMU/CDU Control Panel	1-187
1.3.2.6	LEB AGC Display and Keyboard	1-190
1.3.2.7	AGC Computer Control Panel	1-193
1.3.2.8	LEB Circuit Breaker Panel	1-194
1.3.3	G&N Supplementary Displays	1-197
1.3.3.1	Mark Error Display (Panel 17)	1-197
1.3.3.2	TEL/SEXTANT Display (Panel 21)	1-201
1.3.3.3	Navigational Evaluation Panel (Panel 25)	1-201
1.3.3.4	Navigation Parameters (Panel 20)	1-202
1.3.3.5	True Spacecraft Attitude Panel (Panel 22)	1-203
1.3.3.6	Orbital Position Display (Panel 19)	1-203
1.3.3.7	Sextant Door Display (Panel 18)	1-203
1.3.4	Right-Hand and Right-Hand-Forward Equipment Bays	1-203
1.3.4.1	Waste Management Panel	1-203
1.3.4.2	Right-Hand LEB Circuit Breaker Panel	1-205
1.3.4.3	In-Flight Test System Panel	1-207
1.3.5	Left-Hand and Left-Hand-Forward Equipment Bays	1-209
1.3.5.1	Clock and Event Timer Panel	1-209
1.3.5.2	ECS Component Location	1-211
1.3.6	Simulator Controls and Displays	1-225
1.3.6.1	Simulator Status Panel (Panel 48)	1-225
1.3.6.2	Simulator Control Panel (Panel 46)	1-225
1.3.6.3	Lighting Controls	1-229
1.3.6.4	Performance Timers	1-231
1.3.6.5	Computer Status Panel	1-232
1.3.6.6	Recorder and Plotter Panel	1-234
1.3.6.7	True Trainee Environment Panel	1-236
1.3.6.8	Visual Systems Status Display	1-238
1.3.6.9	Up-Data Link Panel	1-240
1.3.6.10	Voice Communications Interference Panel	1-243
1.3.6.11	Console Communications System	1-245
1.3.6.12	Malfunction Insertion Unit	1-249
1.3.6.13	Time Displays	1-253
1.3.6.14	Closed Circuit Television System	1-255
1.4	Telemetry Console	1-259
1.4.1	Monitor Control	1-259
1.4.2	Fault Controls	1-263
1.4.3	Time Display	1-266
1.4.4	Communications Control	1-268
1.4.5	Telemetry Status	1-270
1.5	Computer Complex	1-273
1.5.1	Computer System	1-273
1.5.1.1	Memory Unit	1-277
1.5.1.2	Input/Output Unit	1-277

Section	Title	Page
1.5.1.3	Control Unit	1-279
1.5.1.4	Arithmetic Unit	1-279
1.5.1.5	Word Format	1-279
1.5.1.6	Computer Controls	1-281
1.5.2	Peripheral Equipment	1-285
1.5.2.1	Magnetic Tape Units (MTU)	1-285
1.5.2.2	Line Printer	1-289
1.5.2.3	Card Reader	1-291
1.5.2.4	Card Punch	1-294
1.5.2.5	Paper Tape Reader	1-297
1.5.2.6	Paper Tape Punch	1-297
1.5.2.7	Typewriter	1-298
1.5.3	Data Conversion Equipment	1-301
1.5.3.1	DCE Control Unit	1-301
1.5.3.2	Digital-to-Analog Converter	1-303
1.5.3.3	Analog-to-Digital Converter	1-303
1.5.3.4	Digital Bit Input	1-303
1.5.3.5	Digital Word Input	1-303
1.5.3.6	Digital Bit Output	1-303
1.5.3.7	Digital Word Output (Direct)	1-303
1.5.3.8	Guidance and Navigation Word Buffer	1-304
1.5.3.9	Computer-to-Computer Buffer	1-304
1.5.3.10	SCS Hand Controller Input System	1-304
1.5.3.11	Malfunction Insertion Unit	1-304
1.5.3.12	Central Timing Equipment	1-305
1.5.3.13	Integrated Up-Data Link	1-307
1.5.3.14	Digital-to-Resolver Converter	1-307
1.5.3.15	Analog-to-Digital Shaft Position Encoder	1-307
1.6	Recording Equipment	1-309
1.6.1	X-T Recorder	1-309
1.6.2	X-Y Plotters	1-315
1.6.3	Audio Tape Recorder	1-320
1.7	Simulator Control Programs	1-322
1.7.1	Executive and Control System	1-322
1.7.1.1	Supervisory Control Program	1-323
1.7.1.2	Interrupt and Timing Control Program	1-323
1.7.1.3	Input/Output Control Program	1-325
1.7.1.4	On-Line Data Recording Program	1-326
1.7.1.5	Step-Ahead Program	1-326
1.7.1.6	Simulator Master Control Program	1-326
1.7.2	Real-Time Input-Output Program	1-329
1.7.2.1	Setup and Intercomputer Data Transfer Routines	1-330
1.7.2.2	Real-Time Input/Output Transfer Routine	1-330
1.7.2.3	Transfer Complete Routine	1-331
1.7.2.4	Transfer Failure Routine	1-331
1.7.3	MIU Program	1-331
1.7.3.1	Initialization Routine	1-332
1.7.3.2	Main Routine	1-332
1.7.3.3	MIU Master Clear Routine	1-333

Section		Title	Page
	1.7.4	Plotters and Recorders Program	1-333
	1.7.5	Utility Systems	1-334
	1.7.6	Library of Programs	1-334
2		SIMULATOR SYSTEM	2-1
	2.1	Purpose and Scope	2-1
	2.2	Systems Configuration Summary	2-2
	2.3	Simulated Spacecraft Dynamics	2-2
	2.3.1	Equations of Motion	2-2
	2.3.1.1	Simulated Coordinate Systems	2-2
	2.3.1.2	EOM Program Interface	2-7
	2.3.1.3	Computation of EOM	2-9
	2.3.1.4	Thrusting System Inputs	2-11
	2.3.1.5	Ephemeris Program	2-12
	2.3.2	Aerodynamic Forces and Moments Program	2-12
	2.3.3	Weight and Balance Program	2-13
	2.3.4	S-IVB Attitude Control System Simulation	2-16
	2.4	Stabilization and Control System	2-18
	2.4.1	SCS Configuration Reference	2-18
	2.4.2	SCS Simulation	2-23
	2.4.2.1	Power and Mode Control Logic	2-23
	2.4.2.2	Attitude Control Subsystem	2-23
	2.4.2.3	Thrust Vector Control (TVC) Program	2-23
	2.4.2.4	Inertial Sensors Program	2-27
	2.5	Visual Systems	2-29
	2.5.1	Mission Effects Projector (MEP)	2-29
	2.5.1.1	Orbital Scenes	2-31
	2.5.1.2	Boost Scenes	2-33
	2.5.1.3	Entry Scenes	2-33
	2.5.1.4	Moon Scenes	2-34
	2.5.1.5	Infinity Image System	2-34
	2.5.2	Solar Effects Simulation	2-36
	2.5.3	Starfield Display	2-36
	2.5.3.1	Occultation Mask	2-37
	2.5.4	Scanning Telescope and Sextant Visuals	2-39
	2.5.4.1	Scanning Telescope Simulation	2-39
	2.5.4.2	Sextant Simulation	2-43
	2.5.5	Rendezvous Image Generation Systems	2-47
	2.6	Guidance and Control (G&N) System	2-50
	2.6.1	G&N System Configuration Reference	2-50
	2.6.2	G&N System Simulation	2-54
	2.6.3	ISS Simulation	2-54
	2.6.3.1	IMU Simulation	2-54
	2.6.3.2	IMU Mode Switching Simulation	2-58
	2.6.3.3	IMU-CDU Difference Signals Simulation	2-64
	2.6.3.4	Error Warning Simulation	2-66
	2.6.3.5	IMU Temperature Control Simulation	2-69
	2.6.3.6	Inertial CDU Signal Simulation	2-71
	2.6.4	AGC Subsystem Simulation	2-73

Section	Title	Page
2.6.4.1	AGC Executive Program Simulation	2-74
2.6.4.2	AGC Input/Output (I/O) Simulation	2-75
2.6.4.3	AGC Up-Data Link Simulation	2-75
2.6.4.4	AGC Major Mode Programs Simulation	2-76
2.6.4.5	AGC Subroutines Simulation	2-82
2.6.5	Optics Subsystem Simulation	2-82
2.7	Sequential Events Control System (SECS)	2-85
2.7.1	Sequential Events Control System Configuration Reference	2-85
2.7.2	Sequencing Events Control System	2-85
2.7.2.1	Launch-Boost and S-IV Separation Sequences	2-86
2.7.2.2	Earth Landing Sequence	2-86
2.7.2.3	Abort Sequences	2-89
2.8	Telecommunications	2-90
2.8.1	Telecommunications Systems Configuration Reference	2-90
2.8.2	Telecommunications Systems Simulation	2-91
2.8.2.1	VHF/AM Simulation	2-91
2.8.2.2	S-Band Simulation	2-91
2.8.2.3	UHF/FM Simulation	2-92
2.8.2.4	HF Simulation	2-92
2.8.2.5	Up-Data Link Nonintegrated Mode	2-92
2.9	C/M and S/M Reaction Control System (RCS)	2-96
2.9.1	RCS Configuration Reference	2-96
2.9.2	C/M and S/M Reaction Control Systems Simulation	2-96
2.10	Service Propulsion System	2-102
2.10.1	Service Propulsion System Configuration Reference	2-102
2.10.2	Service Propulsion System Simulation	2-102
2.10.2.1	Service Propulsion System Thermodynamics Simulation	2-105
2.10.2.2	Propellant Utilization Subsystem (PUS)	2-107
2.11	Electrical Power System	2-109
2.11.1	EPS Configuration Reference	2-109
2.11.2	Electrical Power System Simulation	2-110
2.11.2.1	Cryogenics Storage Simulation	2-110
2.11.2.2	Fuel Cell Thermodynamics Simulation	2-110
2.11.2.3	EPS Control Logic Simulation	2-119
2.11.2.4	EPS D-C Bus Simulation	2-123
2.11.2.5	EPS Display Simulation	2-123
2.11.2.6	Space Radiator Simulation	2-126
2.12	Environmental Control System (ECS)	2-127
2.12.1	ECS Configuration Reference	2-127
2.12.2	ECS Simulation	2-127
2.12.2.1	ECS Oxygen Subsystem Simulation	2-127
2.12.2.2	ECS Water Storage Subsystem Simulation	2-128
2.12.2.3	ECS Water-Glycol Subsystem Simulation	2-139
2.12.2.4	ECS Cabin/Suit Subsystem Simulation	2-140
2.12.3	AMS Environment System	2-145
2.12.3.1	SCM Environment	2-145
2.12.3.2	Smoke Simulation	2-145
2.12.3.3	Waste Management Subsystem	2-147
2.12.3.4	Aural Cue Simulation	2-147
2.13	Caution and Warning System (CWS)	2-150

Section		Title	Page
	2.13.1	CWS Configuration Reference	2-150
	2.13.2	CWS Simulation	2-150
	2.14	MSCC Interface Programs	2-152
	2.14.1	MSCC Interface Program	2-152
	2.14.2	Up-Data Link Integrated Mode	2-153
	2.14.3	PCM Telemetry Simulation	2-155
	2.14.3.1	Analog Inputs to PCM	2-156
	2.14.3.2	Bilevel Inputs to PCM	2-156
	2.14.3.3	Parallel-Digital Inputs to PCM	2-156
	2.14.3.4	Serial-Digital Input to PCM	2-156
	2.14.3.5	Other Inputs to PCM	2-159
	2.14.3.6	PCM-T/M Output	2-159
	2.14.4	Telemetry Fault Simulation	2-159
	2.14.4.1	Analog Fault Insertion	2-159
	2.14.4.2	Bilevel Fault Insertion	2-160
	2.14.4.3	Parallel-Digital Word Faulting	2-160
	2.15	AMS Voice Communications Subsystem	2-161
3		AMS UTILIZATION	3-1
	3.1	Purpose and Scope	3-1
	3.2	Nominal Training Mission	3-1
	3.2.1	Nominal Mission Reference Data	3-7
	3.2.1.1	Launch-Boost	3-7
	3.2.1.2	Suborbital Aborts	3-7
	3.2.1.3	Orbital Navigation	3-10
	3.2.1.4	Retrograde, Entry, and Recovery	3-57
	3.2.1.5	Simulation Initialization	3-67
	3.2.2	Basic Nominal Mission (Mission A)	3-73
	3.2.3	Nominal Mission, Plane Changes (Mission B)	3-74
	3.2.4	Nominal Mission, Hohmann Transfers (Mission C)	3-75
	3.2.5	Nominal Mission, Transposition and Docking (Mission D)	3-76
	3.2.6	Building Additional Missions	3-89
	3.2.6.1	Orbital Operations at 130 N Mi	3-89
	3.2.6.2	Operations in Elliptical Orbit	3-89
	3.2.6.3	Missions of Varying Duration	3-89
	3.2.6.4	RCS Retrograde	3-89
	3.2.6.5	Nonoptimum Hohmann Transfer	3-90
	3.2.6.6	Atlantic Range Recovery	3-90
	3.3	Organization of the Training Syllabus	3-90
	3.3.1	Types of Training	3-91
	3.3.1.1	Part Task Training	3-91
	3.3.1.2	Mission Task Training	3-91
	3.3.1.3	Typical Mission Training	3-91
	3.3.2	Identification of Training Sessions	3-92
	3.4	General Description, Exercises, and Sessions	3-92
	3.4.1	System Procedures (Exercise PT1)	3-92
	3.4.1.1	SCS Operation (Session PT1.1)	3-92
	3.4.1.2	RCS and SPS Operation (Session PT1.2)	3-95
	3.4.1.3	EPS Operation (Session PT1.3)	3-95

Section	Title	Page
3.4.1.4	ECS Operation (Session PT1.4)	3-95
3.4.1.5	Watch Station Procedures (Session PT1.5)	3-96
3.4.2	Navigation and IMU Alignment (Exercise PT2)	3-96
3.4.2.1	IMU Alignment (Session PT2.1)	3-96
3.4.2.2	Landmark Tracking Navigation (Session PT2.2)	3-97
3.4.2.3	Star-Lunar Landmark Navigation (Session PT2.3)	3-97
3.4.2.4	G&N Contingencies (Session PT2.4)	3-97
3.4.3	Delta V Procedures (Exercise PT3)	3-97
3.4.3.1	Primary and Backup Delta V Modes (Session PT3.1)	3-97
3.4.3.2	Retrograde from Earth Orbit (Session PT3.2)	3-98
3.4.4	Entry (Exercise PT4)	3-98
3.4.4.1	G&N Mode Entry (Session PT4.1)	3-98
3.4.4.2	Entry Contingencies (Session PT4.2)	3-99
3.4.5	Launch-Boost and Abort (Exercise PT5)	3-99
3.4.5.1	Launch-Boost Procedures (Session PT5.1)	3-100
3.4.5.2	LES Aborts (Session PT5.2)	3-100
3.4.5.3	SPS Aborts (Session PT5.3)	3-100
3.4.6	Prelaunch, Watch-Boost, and Abort (Exercise MT1)	3-100
3.4.6.1	Prelaunch and Launch-Boost (Session MT1.1)	3-101
3.4.6.2	LES Aborts (Session MT1.2)	3-101
3.4.6.3	SPS Aborts (Session MT1.3)	3-101
3.4.7	Orbital Operations (Exercise MT2)	3-101
3.4.7.1	Initial Earth Orbital Procedures (Session MT2.1)	3-102
3.4.7.2	Orbital Watch Station Routines (Session MT2.2)	3-102
3.4.7.3	Transportation and S-IVB Viewing (Session MT2.3)	3-102
3.4.8	Plane Change and Hohmann Transfer Procedures (Exercise MT3)	3-102
3.4.8.1	Plane Change Procedures (Session MT3.1)	3-102
3.4.8.2	Hohmann Transfer Procedures (Session MT3.2)	3-103
3.4.9	Deorbit and Entry (Exercise MT4)	3-103
3.4.9.1	SPS Deorbit and Entry Procedures (Session MT4.1)	3-103
3.4.9.2	RCS Deorbit and Entry Procedures (Session MT4.2)	3-104
3.4.9.3	Early Mission Termination (Session MT4.3)	3-104
3.4.10	Basic Nominal Mission (Exercise TM1)	3-104
3.4.10.1	Orbital Mission Routines (Session TM1.1)	3-104
3.4.10.2	Orbital Mission-Transposition and Docking (Session TM1.2)	3-105
3.4.10.3	Abortive Early Mission Termination (Session TM1.3)	3-105
3.4.11	Nominal Mission, Plane Changes (Exercise TM2)	3-105
3.4.11.1	Plane Change Mission (Session TM2.1)	3-105
3.4.11.2	Plane Change Contingencies (Session TM2.2)	3-106
3.4.12	Nominal Mission, Hohmann Transfers (Exercise TM3)	3-106
3.4.12.1	Transfer to 105/130-N Mi Elliptical Orbit (Session TM3.1)	3-106
3.4.12.2	Hohmann Transfers, 105 N Mi to 130 N Mi to 115 N Mi (Session TM3.2)	3-106
3.4.13	Mission 204A Events (Exercise TM4)	3-107
3.4.13.1	Nonoptimum Hohmann Transfer (Session TM4.1)	3-107
3.4.13.2	Second Orbital Transfer (Session TM4.2)	3-107
3.4.13.3	Final Phase, Mission 204A (SPS Retro) (Session TM4.3)	3-107
3.4.13.4	Final Phase, Mission 204A (RCS Retro) (Session TM4.4)	3-108

Section	Title	Page
3.5	Apollo Operations Handbook	3-108
3.5.1	Crew Procedures, Basic Nominal Training Mission	3-108
3.5.2	Crew Procedures, Nominal Mission - Plane Changes	3-113
3.5.3	Crew Procedures, Nominal Mission - Hohmann Transfers	3-118
3.5.4	Crew Procedures, Nominal Mission - Transposition and Docking	3-124
3.5.5	Variations in Nominal Mission	3-128
3.5.5.1	Suborbital Aborts	3-128
3.5.5.2	Early Mission Termination from Orbit	3-128
3.5.5.3	RCS Retrograde from Entry	3-129
3.6	Script Preparation and Handbook Contents	3-129
3.6.1	AMS Operation	3-129
3.6.2	Script Preparation	3-131
3.6.3	Session Data Sheets	3-131
3.6.4	Initialization Checklists	3-132
3.6.5	IOS Data Sheets	3-132
3.6.5.1	Prelaunch Procedures IOS Data Sheets	3-146
3.6.5.2	Launch and Ascent Procedures IOS Data Sheets	3-147
3.6.5.3	Special Earth Orbital Procedures IOS Data Sheets	3-147
3.6.5.4	Deorbit and Entry Procedures IOS Data Sheets	3-147
3.6.5.5	Postlanding Procedures IOS Data Sheets	3-148
3.6.5.6	System Procedures IOS Data Sheets	3-148
3.6.5.7	SCS Procedures IOS Data Sheets	3-148
3.6.5.8	G&N Procedures IOS Data Sheets	3-149
3.6.5.9	SPS Abort and RCS Retrofire Procedures IOS Data Sheets	3-149
3.6.5.10	Malfunction Procedures IOS Data Sheets	3-149
3.6.6	Compiling the Script	3-149
3.6.7	Session Accomplishment	3-150
3.6.7.1	Presimulation Briefing	3-150
3.6.7.2	Use of Completed Script	3-153
3.6.7.3	Postsimulation Debriefing	3-153
3.6.8	Reference Tables	3-154
3.6.8.1	Simulated Malfunction Tables	3-154
3.6.8.2	Simulation Output Tables	3-154
3.6.9	Compiling Additional Sessions	3-154
3.6.9.1	Requirements for Additional Sessions	3-157
3.6.9.2	Use of Existing Sessions	3-157
3.6.9.3	New Session Purpose and Scope	3-157
3.6.9.4	Crew Procedures and Measurement Data	3-157
3.6.9.5	Instructor Activity Outline	3-158
3.6.9.6	Scripting Data and Script Preparation	3-159

APPENDIX

A	ABBREVIATIONS	A-1

LIST OF ILLUSTRATIONS

Figure No.	Title	Page
1-1	Apollo Mission Simulator	1-2
1-2	AMS Equipment Arrangement, MSC, Clear Lake, Texas	1-9
1-3	AMS Equipment Arrangement, KSC, Cape Kennedy, Florida	1-11
1-4	SCM LH, Forward, Lower, and Aft Equipment Bays	1-16
1-5	SCM RH, Forward, and Aft Equipment Bays	1-20
1-6	SCM Exterior	1-22
1-7	SCM Main Display Panel	1-25
1-8	Visual Systems	1-28
1-9	Vertical and Horizontal Insertion Mechanism	1-30
1-10	IOS Simulator Console (Perspective)	1-33
1-11	IOS Simulator Console	1-35
1-12	Barometric Altimeter Panel	1-54
1-13	Spacecraft Panel No. 2	1-55
1-14	Spacecraft Panel No. 3	1-57
1-15	Flight Director Attitude Indicator Panel (Spacecraft Panel No. 4)	1-60
1-16	Spacecraft Panel No. 5	1-63
1-17	Attitude Set/Gimbal Position Indicator Panel (Spacecraft Panel No. 6)	1-66
1-18	Delta V Panel (Spacecraft Panel No. 7)	1-69
1-19	Spacecraft Panel No. 8	1-72
1-20	Spacecraft Panel No. 10	1-77
1-21	Spacecraft Panel No. 11	1-80
1-22	Spacecraft Panel No. 12	1-84
1-23	Spacecraft Panel No. 13	1-87
1-24	AGC Display and Keyboard Panel (Spacecraft Panel No. 14)	1-97
1-25	Reaction Control System Panel (Spacecraft Panel No. 15)	1-101
1-26	Spacecraft Panel No. 16	1-105
1-27	Spacecraft Panel No. 17	1-109
1-28	Electrical Power System Panel (Spacecraft Panel No. 18)	1-110
1-29	Antenna Control System Panel (Spacecraft Panel No. 19)	1-121
1-30	Communications Control Subpanel (Spacecraft Panel No. 20)	1-122
1-31	SPS Quantity Gaging Subpanel (Spacecraft Panel No. 20)	1-129
1-32	Spacecraft Panel No. 21	1-133
1-33	Circuit Breaker Panel No. 22	1-138
1-34	Spacecraft Panel No. 23	1-152
1-35	Spacecraft Panel No. 24	1-156
1-36	Spacecraft Panel No. 25	1-160
1-37	LH Audio and Lighting Control Panel (Spacecraft Panel No. 26)	1-169
1-38	Lower Equipment Bay (SCM)	1-172
1-39	G&N Annunciator (Spacecraft Panel No. 57)	1-174
1-40	Optics Panel (Spacecraft Panel No. 30)	1-176
1-41	LEB Floodlight Panel	1-178
1-42	LEB G&N Panel	1-180
1-43	IMU/CDU Control Panel	1-186

Figure No.	Title	Page
1-44	LEB Navigation and Display Keyboard Panel (Spacecraft Panel No. 33)	1-190
1-45	AGC Computer Control Panel (Spacecraft Panel No. 43)	1-193
1-46	LEB Circuit Breaker Panel (Spacecraft Panel No. 71)	1-194
1-47	G&N Supplementary Displays	1-196
1-48	Navigation Evaluation Panel	1-200
1-49	Waste Management System Panel (Spacecraft Panels No. 90 and No. 91)	1-204
1-50	RH (LEB) Circuit Breaker Panel (Spacecraft Panel No. 87)	1-205
1-51	In-Flight Test System (Spacecraft Panel No. 97)	1-207
1-52	Clock and Event Timer Panel (Spacecraft Panel No. 66)	1-210
1-53	ECS Components Location	1-213
1-54	ECS Valve Position Indicator	1-215
1-55	Simulator Status Panel	1-226
1-56	Simulator Control Panel	1-227
1-57	Lighting Control Panel	1-230
1-58	Performance Timer Panel	1-231
1-59	Computer Status Panel	1-232
1-60	Recorder and Plotter Panel	1-235
1-61	True Trainee Environment Panel	1-236
1-62	Visual System Status Panel	1-238
1-63	Up-Data Link Panel	1-240
1-64	Voice Communications Interference Panel	1-243
1-65	Console Communications Control System Panel	1-244
1-66	Communications Control Panel	1-248
1-67	MIU Control Panel	1-250
1-68	MIU Display Panel	1-252
1-69	Central Timing Equipment	1-254
1-70	Remote Display Indicator	1-254
1-71	CCTV Monitor Control Panel	1-255
1-72	Telemetry Console	1-257
1-73	Analog Monitor Control Panel	1-260
1-74	Digital Monitor Control Panel	1-261
1-75	Analog Malfunction Control Panel	1-262
1-76	Digital Word Malfunction Control Panel	1-265
1-77	Time Display Panels	1-267
1-78	Communications Control Panels	1-269
1-79	Telemetry Status Panel	1-271
1-80	AMS Computer Complex	1-272
1-81	DDP-224 Computer	1-274
1-82	Digital Computer Simplified Block Diagram	1-275
1-83	DDP-224 Computer Block Diagram	1-276
1-84	Word Format	1-280
1-85	DDP-224 Computer Control Panel	1-281
1-86	AMS Computer Complex Interface	1-284
1-87	Magnetic Tape Unit	1-286
1-88	MTU Control Panel	1-287
1-89	DD/P 3000 Line Printer	1-289
1-90	Line Printer Control Panel	1-290
1-91	Card Reader	1-291

Figure No.	Title	Page
1-92	Card Reader Control Panel	1-292
1-93	B303 Card Punch	1-294
1-94	Card Punch Control Panel	1-295
1-95	Paper Tape Reader	1-296
1-96	Paper Tape Punch	1-296
1-97	Typewriter	1-299
1-98	AMS Flow Diagram	1-300
1-99	AMS Computer - DCE Interface	1-302
1-100	CTE Simplified Drawing	1-306
1-101	X-T Recorder	1-308
1-102	Attenuator Control Panel	1-310
1-103	Oscillograph Control Panel	1-312
1-104	Light Level Panel	1-313
1-105	X-Y Variplotter (30 X 30)	1-314
1-106	X-Y Variplotter (11 X 17)	1-318
1-107	KRS Audio Tape Recorder Panel	1-321
1-108	Input/Output Control Program	1-324
1-109	Program Real-Time Input/Output Flow Chart	1-328
2-1	Simulated Coordinate Systems	2-6
2-2	Equations of Motion Interface Block Diagram	2-8
2-3	Equations of Motion Block Diagram	2-10
2-4	Aerodynamic Forces and Moments Block Diagram	2-14
2-5	Weights and Balance Block Diagram	2-15
2-6	S-IVB Control and Thrusting Systems Simulation	2-17
2-7	SCS Attitude Control Subsystem	2-19
2-8	BMAG-AGCU-FDAI Subsystem	2-21
2-9	Thrust Vector Control Subsystem	2-22
2-10	SPS Power and Mode Control Simulation	2-24
2-11	Attitude Control Subsystem Simulation	2-25
2-12	Thrust Vector Control Subsystem Simulation	2-26
2-13	SCS Inertial Sensors Simulation	2-28
2-14	MEP Simplified Diagram	2-30
2-15	MEP Central Image Film	2-32
2-16	Infinity Image System	2-35
2-17	Celestial Sphere Drive	2-38
2-18	Occultation Unit/Celestial Sphere	2-40
2-19	Occultation Mask Drive Generation	2-41
2-20	Telescope Functional Diagram	2-42
2-21	Telescope Optic Drive Generation Flow Diagram	2-44
2-22	AMS Sextant Functional Diagram	2-45
2-23	Simulated Sextant Drive Flow Diagram	2-48
2-24	Rendezvous Image Model Complex	2-49
2-25	Rendezvous Sun Lighting Simulation	2-51
2-26	Rendezvous Image Generation Drive Flow Diagram	2-52
2-27	Inertial Subsystem	2-55
2-28	G&N Computer Subsystem	2-57
2-29	Optical Subsystem	2-59
2-30	G&N System Simulation	2-61
2-31	Inertial Measurement Unit Block Diagram	2-62
2-32	IMU Mode Switching	2-63

Figure No.	Title	Page
2-33	IMU-CDU Difference Signals	2-65
2-34	Error-Warning Flow Chart	2-67
2-35	IMU Temperature Control	2-70
2-36	Inertial CDU Drive Block Diagram	2-72
2-37	Optics CDU Drive	2-83
2-38	Sequencing Systems	2-87
2-39	Telecommunications System Block Diagram	2-93
2-40	Up-Data Link Simulation, Nonintegrated Mode	2-95
2-41	C/M Reaction Control System	2-97
2-42	S/M Reaction Control System	2-99
2-43	C/M and S/M Simulation	2-101
2-44	Service Propulsion System	2-103
2-45	SPS Thermodynamics Simulation	2-106
2-46	SPS Propulsion Utilization Simulation	2-108
2-47	Fuel Cell Subsystem	2-111
2-48	EPS Block Diagram	2-113
2-49	Cryogenic Storage System	2-115
2-50	Oxygen Storage Subsystem Simulation	2-117
2-51	Hydrogen Storage Subsystem Simulation	2-118
2-52	EPS Fuel Cell Thermodynamic Simulation	2-120
2-53	EPS Logic Simulation	2-121
2-54	EPS D-C Bus Simulation	2-124
2-55	EPS Displays Simulation	2-125
2-56	ECS Oxygen Subsystem	2-129
2-57	ECS Water Storage Subsystem	2-131
2-58	ECS Water-Glycol Subsystem	2-133
2-59	ECS Cabin/Suit Subsystem	2-135
2-60	ECS Oxygen Subsystem Simulation	2-137
2-61	ECS Water Storage Subsystem Simulation	2-138
2-62	ECS Water-Glycol Subsystem Simulation	2-141
2-63	ECS Cabin/Suit Subsystem Simulation	2-143
2-64	Smoke Simulation	2-146
2-65	Waste Management Subsystem	2-148
2-66	Aural Cue Simulation System	2-149
2-67	Caution and Warning System Simulation	2-151
2-68	Trajectory Link Message	2-154
2-69	PCM Telemetry Simulation and T/M Console	2-157
2-70	AMS Voice and Receiver Simulation	2-162
3-1	Nominal Training Mission Block Diagram	3-5
3-2	Launch/Ascent Data	3-8
3-3	Launch/Ascent Path	3-9
3-4	Navigation Reference Data, Orbit 1	3-25
3-5	Navigation Reference Data, Orbit 2	3-27
3-6	Navigation Reference Data, Orbit 3	3-29
3-7	Navigation Reference Data, Orbit 4	3-31
3-8	Navigation Reference Data, Orbit 5	3-33
3-9	Navigation Reference Data, Orbit 6	3-35
3-10	Navigation Reference Data, Orbit 7	3-37
3-11	Navigation Reference Data, Orbit 8	3-39

Figure No.	Title	Page
3-12	Navigation Reference Data, Orbit 9	3-41
3-13	Navigation Reference Data, Orbit 10	3-43
3-14	Navigation Reference Data, Orbit 11	3-45
3-15	Navigation Reference Data, Orbit 12	3-47
3-16	Navigation Reference Data, Orbit 13	3-49
3-17	Navigation Reference Data, Orbit 14	3-51
3-18	Navigation Reference Data, Orbit 15	3-53
3-19	Navigation Reference Data, Orbit 16	3-55
3-20	Entry Dynamics From 105-N Mi Circular Orbit (SPS Retro)	3-59
3-21	Geographic Data, Mission 204A, SPS Retro to Recovery Off Hawaii	3-60
3-22	Geographic Data, Mission 204A, RCS Retro to Recovery Off Bermuda	3-61
3-23	Geographic Data, Mission 204A, RCS Retro to Recovery Off Hawaii	3-62
3-24	Geographic Data, Pacific Range Recovery From 105-N Mi Circular Orbit (SPS Retro) - Nominal Mission	3-63
3-25	Geographic Data, Atlantic Range Recovery From 105-N Mi Circular Orbit (SPS Retro) - Nominal Mission	3-64
3-26	Geographic Data, Atlantic Range Recovery From 105-N Mi Circular Orbit (SPS Retro) - 16th Orbit	3-65
3-27	Entry Dynamics From 105 N Mi Circular Orbit (RCS Retro)	3-66
3-28	Geographic Data, Pacific Range Recovery From 105-N Mi Circular Orbit (RCS Retro) - Nominal Mission	3-66
3-29	Entry Dynamics From 130-N Mi Circular Orbit (SPS Retro)	3-66
3-30	Geographic Data, Pacific Range Recovery From 130-N Mi Circular Orbit (SPS Retro) - Nominal Mission	3-66
3-31	Entry Dynamics From Perigee of 105/130-N Mi Orbit (SPS Retro) - Nominal Mission	3-66
3-32	Geographic Data, Pacific Range Recovery From 105/130-N Mi Elliptical Orbit (SPS Retro) - Nominal Mission	3-66
3-33	Entry Dynamics From Perigee of 105/130-N Mi Orbit (RCS Retro) - Nominal Mission	3-66
3-34	Geographic Data, Atlantic Range Recovery From 105/130-N Mi Elliptical Orbit (RCS Retro) - Nominal Mission	3-66
3-35	Entry Dynamics From Apogee of 105/130-N Mi Orbit (RCS Retro) - Nominal Mission	3-66
3-36	Geographic Data, Pacific Range Recovery From 105/130-N Mi Elliptical Orbit (RCS Retro) - Nominal Mission	3-66
3-37	Nominal Mission Chart, Orbit 1	3-83
3-38	Nominal Mission Chart, Orbit 2	3-85
3-39	Nominal Mission Chart, Orbit 3	3-87
3-40	Instructor Script Preparation	3-130
3-41	Sample Initialization Checklist (Pictorial)	3-134
3-42	Sample IOS Data Sheet (Pictorial)	3-144
3-43	Use of Instructor Handbook	3-151
3-44	Preparing New Session Data Sheets From Handbook	3-155

LIST OF TABLES

Table No.	Title	Page
1-1	AMS Equipment Arrangement	1-4
1-2	SCM LH, Forward, Lower, and Aft Equipment Bays	1-17
1-3	SCM RH, Forward, and Aft Equipment Bays	1-21
1-4	Instructor-Operator Station	1-50
1-5	Barometric Altimeter Panel	1-54
1-6	S/C Panel No. 2	1-56
1-7	S/C Panel No. 3	1-58
1-8	Flight Director Altitude Indicator Panel (S/C Panel No. 4)	1-61
1-9	S/C Panel No. 5	1-64
1-10	Attitude Set/Gimbal Position Indicator Panel (S/C Panel No. 6)	1-67
1-11	Delta V Panel (S/C Panel No. 7)	1-70
1-12	S/C Panel No. 8	1-73
1-13	S/C Panel No. 10	1-78
1-14	S/C Panel No. 11	1-81
1-15	S/C Panel No. 12	1-85
1-16	S/C Panel No. 13	1-88
1-17	AGC Display and Keyboard Panel (S/C Panel No. 14)	1-98
1-18	Reaction Control System Panel (S/C Panel No. 15)	1-102
1-19	S/C Panel No. 16	1-106
1-20	S/C Panel No. 17	1-109
1-21	Electrical Power System Panel (S/C Panel No. 18)	1-112
1-22	Antenna Control System Panel (S/C Panel No. 19)	1-121
1-23	Communications Control Subpanel (S/C Panel No. 20)	1-124
1-24	SPS Quantity Gaging Subpanel (S/C Panel No. 20)	1-130
1-25	S/C Panel No. 21	1-134
1-26	Circuit Breaker Panel No. 22	1-139
1-27	S/C Panel No. 23	1-154
1-28	S/C Panel No. 24	1-158
1-29	S/C Panel No. 25	1-162
1-30	LH Audio and Lighting Control Panel (S/C Panel No. 26)	1-170
1-31	G&N Annunicator Panel (S/C Panel No. 57)	1-175
1-32	Optics Panel (S/C Panel No. 30)	1-177
1-33	LEB Floodlight Panel (S/C Panel No. 81)	1-179
1-34	LEB G&N Panel	1-182
1-35	IMU/CDU Control Panel	1-188
1-36	LEB Navigation and Display Keyboard Panel (S/C Panel No. 33)	1-191
1-37	AGC Computer Control Panel (S/C Panel No. 43)	1-193
1-38	LEB Circuit Breaker Panel (S/C Panel No. 71)	1-195
1-39	G&N Supplementary Displays	1-198
1-40	Navigation Evaluation Panel	1-200
1-41	Waste Management System Panel (S/C Panels No. 90 and 91)	1-204
1-42	RH (LEB) Circuit Breaker Panel (S/C Panel No. 87)	1-206
1-43	In-Flight Test System (S/C Panel No. 97)	1-208
1-44	Clock and Event Timer Panel (S/C Panel No. 66)	1-210

Table No.	Title	Page
1-45	ECS Component Panels	1-216
1-46	Simulator Status Panel	1-226
1-47	Simulator Control Panel	1-228
1-48	Lighting Control Panel	1-230
1-49	Performance Timer Panel	1-231
1-50	Computer Status Panel	1-233
1-51	Recorder and Plotter Panel	1-235
1-52	True Trainee Environment Panel	1-237
1-53	Visual System Status Panel	1-239
1-54	Up-Data Link Panel	1-241
1-55	Voice Communications Interference Panel	1-243
1-56	Console Communications System Panels	1-246
1-57	Communications Control Panel	1-248
1-58	MIU Control Panel	1-251
1-59	MIU Display Panels	1-252
1-60	Central Timing Equipment Panel	1-254
1-61	CCTV Monitor Control Panel	1-256
1-62	Analog Monitor Control Panel	1-260
1-63	Digital Monitor Control Panel	1-261
1-64	Analog Malfunction Control Panel	1-264
1-65	Digital Word Malfunction Control Panel	1-265
1-66	Time Display Panels	1-267
1-67	Communications Control Panels	1-269
1-68	Telemetry Status Panel	1-271
1-69	DDP-224 Computer Control Panel	1-282
1-70	Magnetic Tape Unit Control Panel	1-288
1-71	Line Printer Control Panel	1-290
1-72	Card Reader Control Panel	1-293
1-73	Card Punch Control Panel	1-295
1-74	IBM Selectric Typewriter	1-299
1-75	Attenuator Control Panel	1-311
1-76	Oscillograph Control Panel	1-312
1-77	Light Level Panel	1-313
1-78	X-Y Variplotter (30 x 30)	1-316
1-79	X-Y Variplotter (11 x 17)	1-319
1-80	KRS Audio Tape Recorder Panel	1-321
1-81	Simulator Control Programs	1-334
1-82	Diagnostic Programs	1-335
1-83	Interface-IMCC Programs	1-335
1-84	Vehicle Dynamics Programs	1-336
1-85	Simulator Effects Programs	1-336
1-86	Vehicle Systems Programs	1-336
2-1	Systems Configuration Summary	2-3
2-2	Major Mode Differences	2-53
3-1	Mission Events, 204A Versus Nominal Mission	3-3
3-2	Terrestrial Landmarks	3-12
3-3	Lunar Landmarks	3-22
3-4	AMS Navigation Stars	3-23
3-5	Simulated MSFN Stations (Nonintegrated Mode)	3-24
3-6	Directory of Entry Data	3-58

Table No.	Title	Page
3-7	Initialization Data	3-69
3-8	Nominal Training Mission	3-78
3-9	AMS Training Syllabus Outline	3-93
3-10	Crew Procedures, Basic Nominal Training Mission	3-110
3-11	Crew Procedures, Nominal Mission - Plane Changes	3-114
3-12	Crew Procedures, Nominal Mission, Hohmann Transfers	3-119
3-13	Crew Procedures, Nominal Mission, Transposition and Docking	3-125
3-14	Sample Initialization Data Sheet	3-135
3-15	Table of IOS Data Sheets	3-136
3-16	Sample Initialization Checklist (Tabular)	3-145

VOLUME I

INTRODUCTION

The purpose of this instructor handbook is to provide detailed instructions for using the Apollo Mission Simulator (AMS) to train flight crew personnel for Apollo Mission 204A. The handbook is comprised of two volumes. This volume (Volume I, Description and Utilization) describes the AMS and provides a recommended plan for using the AMS to train Apollo flight crews. Volume II (Instructor Workbook) provides instructions for operating the simulator and contains the material for making up a complete instructor-operator data package for each training session in the syllabus. Volume II is loose-leaf bound to permit removal of contents for copying.

Volume I is divided into three sections. Section 1 (AMS Description) describes the simulator in terms and depth sufficient to allow the instructor to become thoroughly familiar with the equipment. The description is supplemented with illustrations of the major equipment groups and operating stations. Tables, keyed to the illustrations, identify the controls and displays and briefly state the function of each.

Section 2 (Simulator Systems) contains illustrated descriptions of the simulation of spacecraft dynamics, in-flight visuals, and each spacecraft system. Each spacecraft system discussion is supported with a spacecraft system flow diagram in which the simulated malfunctions and telemetry points are depicted.

Section 3 (AMS Utilization) describes the nominal training mission to be used as a training media for the AMS, explains the use of the Apollo Operations Handbook (SM2A-03) in accomplishing the nominal mission, and defines the recommended syllabus of training. The nominal training mission is three orbits (with variations) that include situations and events equivalent to all significant aspects of the planned Mission 204A. All sessions in the syllabus are with direct respect to the nominal training mission.

SECTION I

DESCRIPTION

1.1 GENERAL DESCRIPTION.

The purpose of this section of the handbook is to provide sufficient Apollo Mission Simulator (AMS) descriptive information to the instructor-operator for effective operation of the simulator without recourse to other AMS documentation.

The AMS is a fixed base training device capable of simulating the characteristics of space vehicle systems performance, flight dynamics, and aural and visual effects during flight. In addition to normal spacecraft operation, the AMS is capable of simulating degraded or malfunctioned system performance. The AMS provides training for flight crews in the operation of spacecraft systems, space navigation, and crew procedures for mission operation.

Simulation is accomplished by means of solution of spacecraft math model problems in three specially programed, general purpose, digital computers. An illustration of the simulator, as installed at MSC, is provided in figure 1-1. The computer area is shown at the right in the figure, the instructor-operator station is in the center, and the left foreground shows the command module and related visual simulation equipment.

Instructor observation and control are performed at the Instructor-Operator Station (IOS) by means of repeater displays, controls, and recorders. Monitoring and faulting of telemetry data prior to transmittal to Manned Spacecraft Control Center (MSCC) is accomplished via a telemetry console.

The AMS has two operational modes, nonintegrated and integrated. The nonintegrated mode provides flight crew training utilizing personnel at the IOS acting as ground site and MSCC personnel in addition to their normal crew monitor and control tasks. The integrated mode provides flight crew training coordinated with the operating personnel of the Manned Space Flight Network and the Mission Control Center.

There are two complete simulators, AMS No. 1 located at MSC, Clear Lake, Texas, and AMS No. 2 at KSC, Cape Kennedy, Florida. Configuration of both simulators is essentially the same with the only significant difference being in facility and equipment arrangement. AMS No. 2 does not include the Waste Management Support assembly which contains storage tanks, filters, blowers, etc., and associated plumbing required for waste management control.

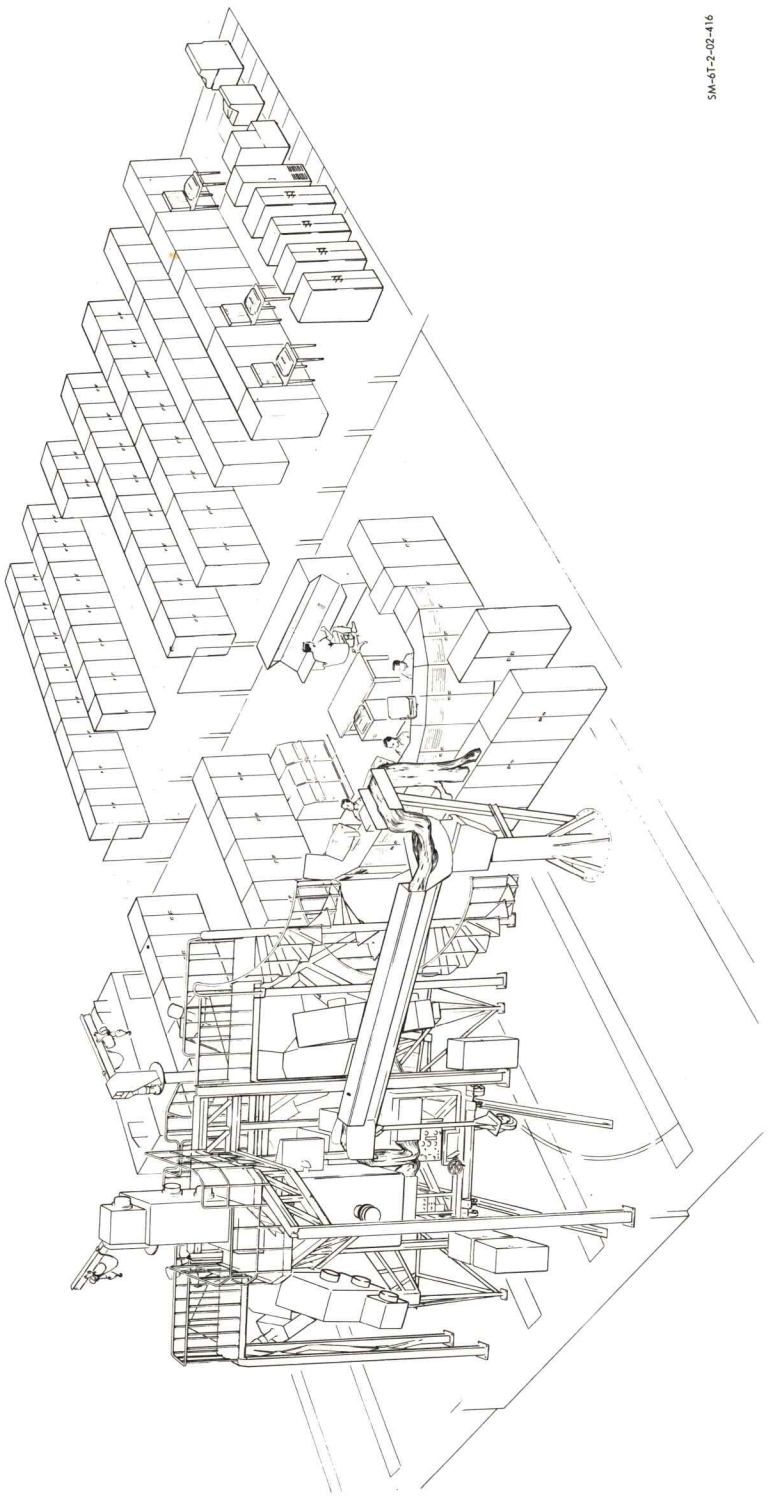

Figure 1-1. Apollo Mission Simulator

1.1.1 MAJOR UNITS AND SYSTEMS.

The physical arrangement of the AMS equipment at MSC and KSC is depicted in figures 1-2 and 1-3. Table 1-1 identifies each unit and its function. The AMS is comprised of the following systems which are described in further details in subsequent paragraphs.

- Simulated Command Module
- Simulated Flight Environment
- Instructor-Operator Station
- Computer Complex
- Peripheral Equipment
- Data Conversion Equipment

1.1.2 FACILITIES AND UTILITIES.

The AMS accommodates an area of approximately 50 x 100 feet. The maximum height of the AMS is approximately 28 feet when the telescope is mounted on its structure. Subflooring is used in the instructor-operator and pooled computer areas to accommodate cabling and also acts a plenum for cooling air to the equipment.

1.1.2.1 Power Requirements.

The AMS operates from a 300-kva 60-cycle 3-phase 4-wire 120/208-volt a-c source. In the event the input voltage level drops below 105 volts, the computer complex enters a "hold" mode interrupting the training session. The facility power is distributed into two groups, simulator power and utility power.

1.1.2.2 Utility Power.

The utility power is completely independent from the simulator power and provides the requirements for maintenance and testing. The utility power available is 208-volt 60-cycle 3-phase; 115-volt 60-cycle 1-phase; and +26 volts dc. This power is distributed to all convenience outlets in the AMS, the cabinet overheat warning system, the SCM emergency lights, power sequencing, the vertical insertion system, the power status light, and the closed circuit television system.

1.1.2.3 Simulator Power.

The simulator power is routed through a main circuit breaker to six main branches:

- Life support
- Motor-generator (400 cycle)
- Computer complex
- Data conversion equipment
- Peripheral
- Visual

Table 1-1. AMS Equipment Arrangement

Unit No.	Unit Name	Description
POOLED COMPUTER AREA		
57	Line printer	
58	Card reader	
60	Card punch	
31	Paper tape reader and punch	
53	Magnetic tape units 1 and 2	
54	Magnetic tape units 3 and 4	
51	DDP 224 (system E)	
48	Shared peripheral	Contains two 4K common memories and fully buffered channel.
52	Shared access distribution unit	Contains multiplexing equipment used to combine computer memories into integrated multiprocessing system.
50	DDP-224 (system D)	
49	DDP-224 (system C)	
49B	Peripheral interface unit	Contains 16K memory module.
51A	Peripheral interface unit	Contains extended memory and direct memory access (DMA) unit for computer E.
59	Intercomputer communication unit	Contains switching logic which provides means for intercomputer data transfer.
55	Time multiplex unit	Contains switching logic which permits simultaneous communication between computers and peripheral devices.
50B	Peripheral interface unit	Contains 8K memory module.
50A	Peripheral interface unit	Contains extended memory and direct memory access (DMA) unit for computer D.
49A	Peripheral interface unit	Contains extended memory, direct memory access (DMA) unit, and fully buffered channel for computer C.
28	Peripheral cabinet, data conversion equipment (DCE)	Contains SCS hand control electronics providing hand control inputs to computer and G&N word buffer which permits computer interface with PCM-TM encoder.
44	Peripheral cabinet, malfunction insertion unit (MIU)	Contains logic cards, relay cards, and power supplies which provide entry of malfunction codes to computer.
41	Peripheral cabinet, digital bit input	Contains logic cards and power supplies which provide for entry of single-bit switch closures to computer.
47	Peripheral cabinet, integrated up-data link (IUDL), computer-to-computer buffer	Contains circuitry and equipment which provide data tie-in with integrated mission control center (IMCC) and computer-to-computer data transfer.
43	Peripheral cabinet, control box A	Contains circuitry and equipment which direct signals between computers and all other data conversion units.
46	Peripheral cabinet, control box B	Same as unit 43.
45	Interface cabinet, data conversion equipment	Contains cabling and connectors used as a patch panel between data conversion equipment and remainder of simulator.

Table 1-1. AMS Equipment Arrangement (Cont)

Unit No.	Unit Name	Description
81	Peripheral cabinet, digital word input (DWI), central timing equipment (CTE)	Contains circuitry and equipment which provide for entry of multi-bit words to computer and transfer of central timing data.
42	Peripheral cabinet, digital bit output (DBO)	Contains circuitry and equipment which provide for output of single bits from computer to simulator.
82	Peripheral cabinet, digital bit output (DBO).	Same as unit 42.
65	Peripheral cabinet, digital word output, relay (DWOR)	Contains circuitry and equipment which provide for outputs of multi-bit words from computer to simulator.
66	Peripheral cabinet, digital word output (DWO)	Same as unit 65.
67	Peripheral cabinet, digital-to-analog converter	Contains circuitry and equipment used to convert digital information to analog information for display use.
68	Peripheral cabinet, digital-to-analog converter	Same as unit 67.
75	Peripheral cabinet, digital-to-analog converter	Same as unit 67.
84	Peripheral equipment	
94	Peripheral equipment	
77	Peripheral cabinet, DCE	Contains analog-to-digital (A/D) converters and digital-to-analog (D/A-F) (fast) converters which are used to converter analog signals to digital information and vice versa.
56	Peripheral cabinet, DCE	Contains analog resolver (A/R) units which accept analog signals from digital-to-analog (D/A) converters and drive synchro resolvers and control transformers, primarily in instruments.
40	Switching cabinet (guidance and navigation)	Contains relay logic cards and circuit interrupter cards. Unit drives digital displays in IOS. Unit contains relays that are associated with command module, stabilization control system (SCS), inertial measurement unit (IMU), Greenwich mean time (GMT), and computer control system.
39	Switching cabinet (in-flight test subsystem and voice communications)	Contains amplifiers, filters, relays, and network cards. Unit simulates audio signals representative of radio frequency, VHF/AM, S-band communication systems, interphone system, astro loops (to GSE umbilical), and the emergency key.
34	Peripheral cabinet (up-data link telemetry and simulation of digital command system)	Contains relay cards, network cards, and 400-cycle inverter. Provides information for telemetry and 400-cycle power to data storage unit in C/M.
30	Telemetry cabinet 1	Contains line drivers, associated power supply, pulse code modulation fault controls, attentuator, and monitor test shelf. Unit accepts system faulting control signals from computer and IOS to provide for systems faulting.
76	Peripheral cabinet, biomedical	Contains GFE biomedical tape recorder used to supply biomedical signals to PCM telemetry system.
32	Power cabinet 1	Contains meters, switches, bus bars, contactors, motor starters, circuit breakers, and main power control panel. Provides power to complete simulator.
33	Power cabinet 2	Same as unit 32.
37	Power cabinet 3	Same as unit 32.

Table 1-1. AMS Equipment Arrangement (Cont)

Unit No.	Unit Name	Description
36	Servo cabinet	Contains servos, servo amplifiers, network cards, and power supplies. Unit provides signals to drive instruments and displays in C/M and IOS.
35	Peripheral cabinet (switching)	Contains crystal can relays, mercury relays, and power relays. Unit provides information to magneline indicator in IOS, sequence control group, emergency detection system, and caution warning system (CWS).
38	Peripheral cabinet (aural simulation)	Contains audio mixer preamplifier, power amplifier, noise generator, voltage controlled attenuator, and filter plus associated power supplies. Simulates noise representing booster, escape, and aerodynamic effects during launch and reentry.
80	Switching cabinet	Contains D/R units, resolver-digital units, and relay cards. Unit drives instruments in C/M, receives resolver-type information from C/M, and transforms information to digital data for computer use.
63	Peripheral cabinet, DCE	Contains digital resolver units (D/R) which accept digital words and provide output signals representing analog functions that drive displays using 400-cps power as input signals.
TELEMETRY CONSOLE		
29	Telemetry console	
RECORDERS AND PLOTTERS		
27	X-Y plotter	
26	X-Y plotter	
25	X-T recorder 3	
24	X-T recorder 2	
23	X-T recorder 1	
73	Rendezvous window 4 equipment cabinet	Contains electronics for celestial sphere, mission effects projector, sun shafting, and associated power supplies. Unit provides necessary signals for infinity image system display.
72	Rendezvous window 4 equipment cabinet	Same as unit 73.
71	Landing window 5 equipment cabinet	Same as unit 73.
70	Landing window 1 equipment cabinet	Same as unit 73.
10	Telescope mission effects projector (MEP) equipment cabinet	Contains electronics for MEP, celestial sphere, and associated power supplies. Unit provides signals to simulate visual display in conjunction with telescope.
9	Sextant and telescope equipment cabinet	Contains electronics for shaft and trunnion angle readout, sextant, telescope, and associated power supplies.
8	Power equipment cabinet	Contains relay assembly, circuit breaker panel, variac panel, and bus bar assembly. Unit provides controls for all power in visual system.
7	Visual equipment cabinet	Contains video monitor, video slide pickup, camera control maintenance control panel, sync generator, and associated power supplies. Unit controls TV pickup for rendezvous and docking model house, and video display presentation for C/M.

Table 1-1. AMS Equipment Arrangement (Cont)

Unit No.	Unit Name	Description
6	Servo equipment cabinet	Contains servo amplifier, summing cards, test panel, and associated power supplies. Unit provides servo drive signals for rendezvous and docking model house.
61	Visual power cabinet	Provides power control and subpower distribution for all visual equipment. Receives power inputs from main power distribution cabinet 32. Contains contactors, circuit breakers, control switches, and bus bars.
11	Rendezvous and docking house	Contains model of target vehicle, TV camera equipment, and drive system for target vehicle. Provides C/M with visual display of simulated target vehicle during rendezvous and docking maneuver.
INSTRUCTOR STATION		
14	IOS console 1	
15	IOS console 2	
16	IOS console 3	
17	IOS console 4	
18	IOS console 5	
19	IOS console 6	
20	IOS console 7	
64	Camera control unit	Contains controls and electronics associated with cameras for closed circuit television system.
3	Compressor cabinet	Contains equipment to furnish air supply for life system equipment in C/M.
4	Interface cabinet	Contains connectors, jumper wires, and terminal boards used for patching signals to SCM and IOS from other simulator cabinets.
SIMULATED COMMAND MODULE		
5	Window optical assembly	Contains relay mirrors, lens, and other optical imaging devices that form infinity imaging system for left-hand landing window and window 1. MEP is included as part of assembly.
89	MEP power supply	Provides power for MEP associated with unit 5.
83	Window optical assembly	Same as unit 5, except for left-hand rendezvous and docking window, and window 2.
91	MEP power supply	Provides power for unit 85.
85	Window optical assembly	Same as unit 5, except for right-hand rendezvous and docking window, and window 4.
92	MEP power supply	Provides power for unit 86.
86	Window optical assembly	Same as unit 5, except for right-hand landing window, and window 5.
90	MEP power supply	Provides power for unit 83.
88	MEP power supply	Provides power for unit 13.
13	Telescope	

Table 1-1. AMS Equipment Arrangement (Cont)

Unit No.	Unit Name	Description
12	Sextant	
1	Apollo mission simulator command module	
2	Command module base	
EXTERNAL EQUIPMENT		
69	400-cycle motor-generator	Provides 400-cycle power for simulator.
87	Air compressor	Provides air supply for cooling of MEPs.

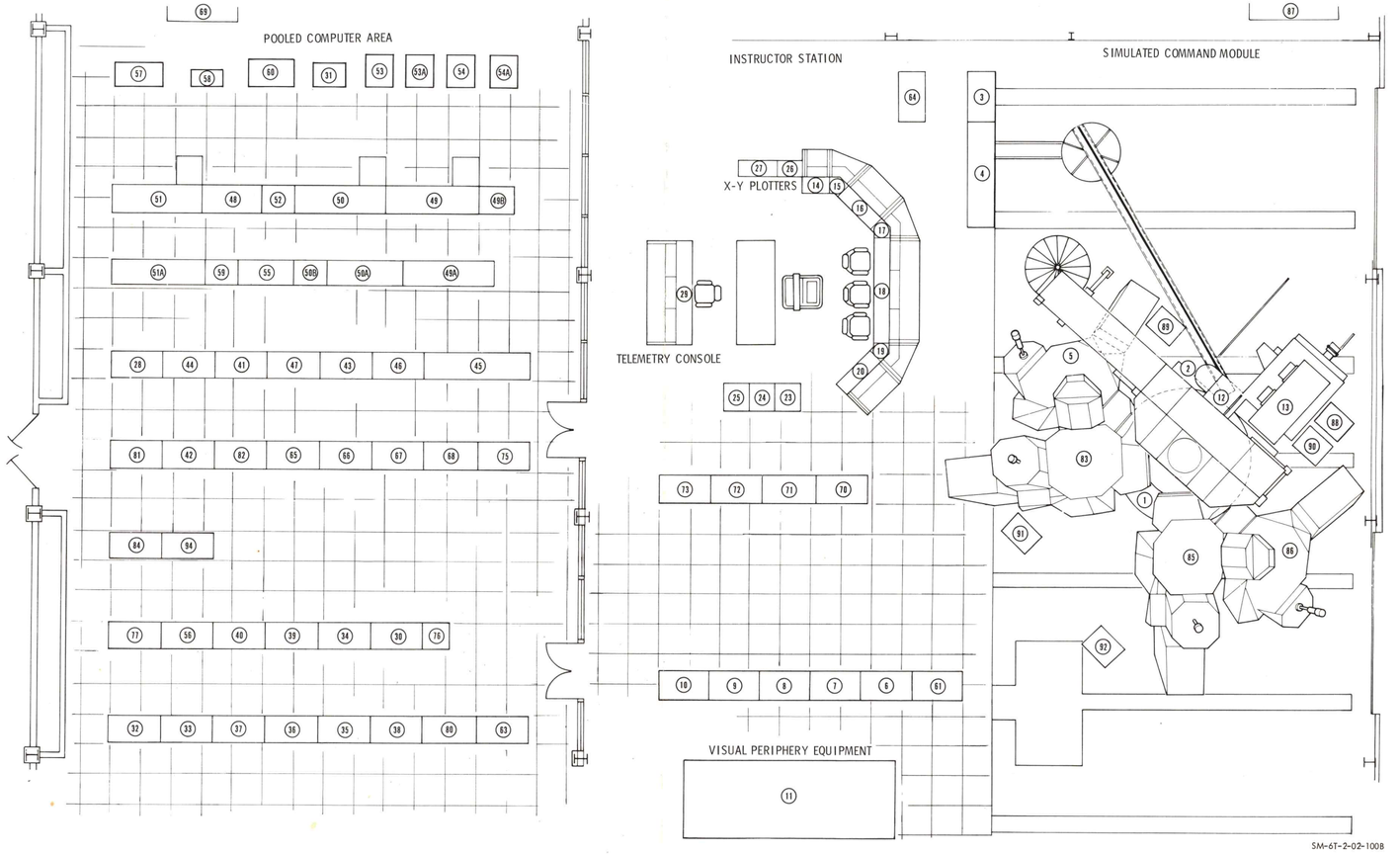

Figure 1-2. AMS Equipment Arrangement, MSC, Clear Lake, Texas

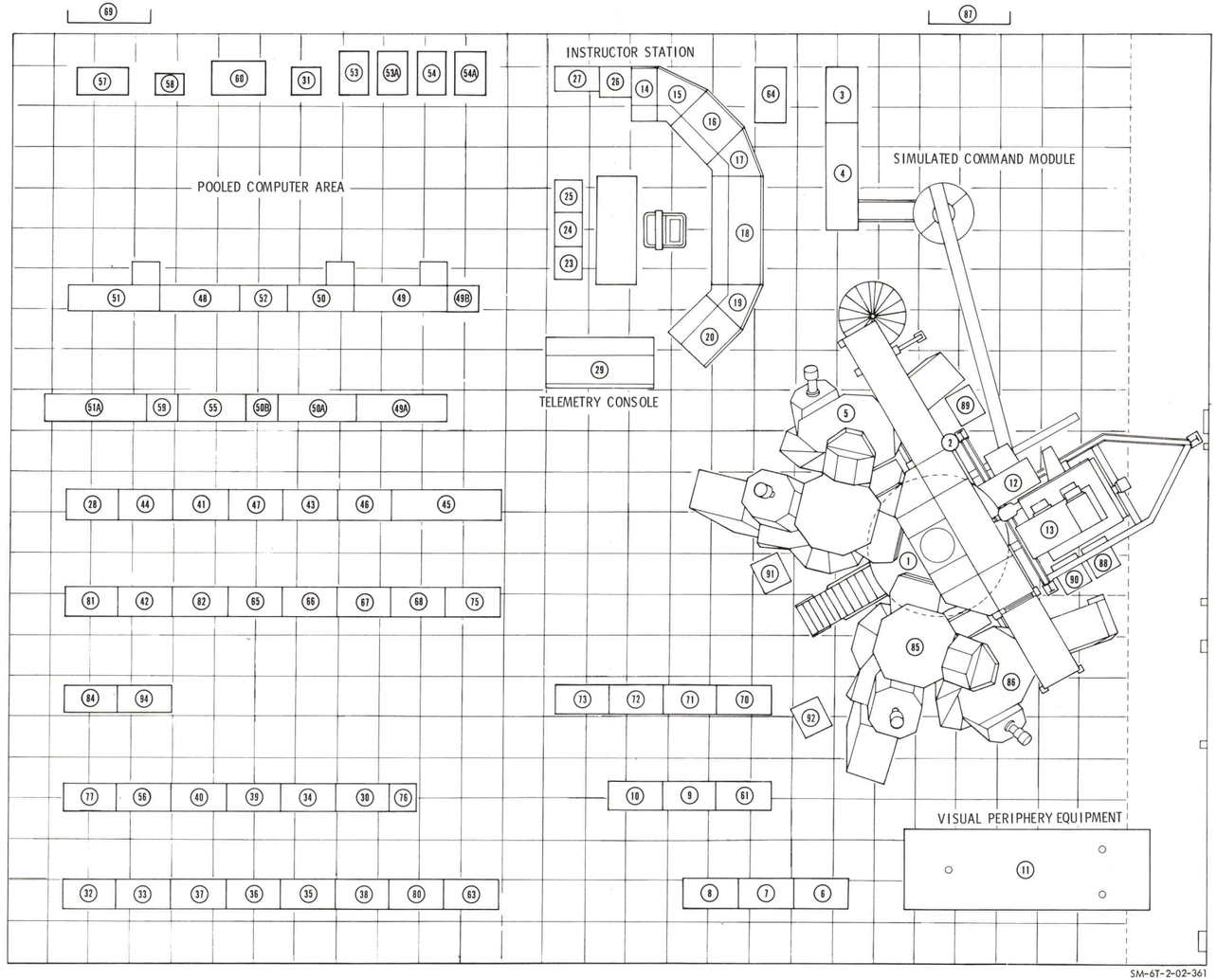

Figure 1-3. AMS Equipment Arrangement, KSC, Cape Kennedy, Florida

Switching of power to these branches is accomplished by one of two modes, sequential or manual. In the sequential mode, power is controlled by two switch lights on the main power control panel which, when activated, applies power immediately to the life support group and then to the other branches in 10-second intervals. In the manual mode, power is controlled by individual system switch lights.

A 20-kva, 400-cycle motor generator powered by the 120/208-volt 60-cycle a-c source provides the 400-cycle single-phase power requirements for the AMS. The motor generators are located externally to the immediate AMS complex area.

1.1.2.4 Air Conditioning.

Filtered conditioned air at a temperature of 68±5°F at relative humidity is supplied by the facility. Each cabinet unit, excluding the computers, the IOS, and portions of the visual equipment, is equipped with temperature sensors which alert the operating personnel when excessive temperature exists in one or more units. Warning horns located at the IOS and in cabinet 34, an overheat warning light at the IOS simulator status panel, and warning lights at the affected cabinet are activated when an overheat condition occurs.

1.1.2.5 Compressed Air.

Two sources of compressed air are available for the AMS. A 25-hp compressor located externally to the simulator area provides cooling air to the mission effect projector (MEP) units.

Unit 3 houses four air compressors, which provide air at a pressure of between 25 and 35 psig for the pressure suit system, the water system, and for the operation of the main hatch mechanism.

1.1.2.6 Water.

Water supplied by the facility at a rate of 3.5 gallons per minute at a temperature of 60±10°F is required for the cooling of the 25-hp air compressor. In addition, water for the simulated waste and potable water system is supplied from the standard-type faucet located near the SCM.

1.2 SIMULATED COMMAND MODULE (SCM).

The interior of the SCM is a replica of the spacecraft interior modified to meet the 1-g training requirements. The exterior of the SCM does not duplicate the exterior of the spacecraft because of the required configuration of the visual system display equipment.

1.2.1 CREW COMPARTMENT.

The interior of the simulated command module, as illustrated in figures 1-4 and 1-5, closely resembles that of Spacecraft 012. The equipment arrangement, controls and displays, crew couches, and other characteristics of the crew compartment are authentically duplicated for purposes of providing the flight crew with an apparent spacecraft environment.

Tables 1-2 and 1-3 identify the extent of simulation panels, assemblies, compartments, and storage areas. Those panels that duplicate their counterpart in both appearance and operation are listed as "functional" in the tables. Those panels which duplicate their spacecraft counterpart in appearance but are not functional are listed as "dummied" in the tables.

All storage areas in the LEB are functional, with the exception of storage areas "B" and "C", which are covered by blank panels. Blank panels also cover the area where the inverters, batteries, battery charger and junction box are housed in the spacecraft.

All storage areas and attenuator panels located at the left-hand equipment bay (LHEB) are authentic replicas of those in the spacecraft; however, the visible plumbing is not functional. Blank panels cover the areas where the battery vent, ECS steam direct heater, electrical power system equipment, and uprighting system circuit breaker panels are normally installed at the right-hand equipment bay (RHEB). The aft equipment bay provides CO_2 absorbers and storage boxes and space-suit storage areas as shown in figure 1-5.

The crew couch assembly and restraints are identical in appearance and operation to that of the spacecraft with only structural changes made to meet the 1-g training conditions. The SCM is not equipped with a sleep/rest station under the left couch as in the spacecraft. The outer configuration of the SCM is entirely functional within the simulator configuration and is not intended to approximate that of the spacecraft. (See figure 1-6.)

Egress from, and ingress to, the SCM is through the main entry hatch, or through the tunnel hatch at the apex of the SCM. An entrance ladder, hinged at the bottom to provide contact with the floor in any vertical SCM position, provides access to the main entry hatch. The main hatch mechanism operates on an automatic counterbalance system through air cylinders and valves and requires only minor manual pressure to open or close the hatch.

The tunnel hatch connects to a walkway above the SCM with a spiral stairway providing access to the ground level. To facilitate movement through the tunnel, a ladder internal to the tunnel structure is provided. Upon being unlatched by placing a foot into the lower toe hold, the ladder drops 24 inches into the SCM. Friction brakes insure that the ladder falls at a safe rate. The ladder is not visible when it is raised manually to its normally raised position.

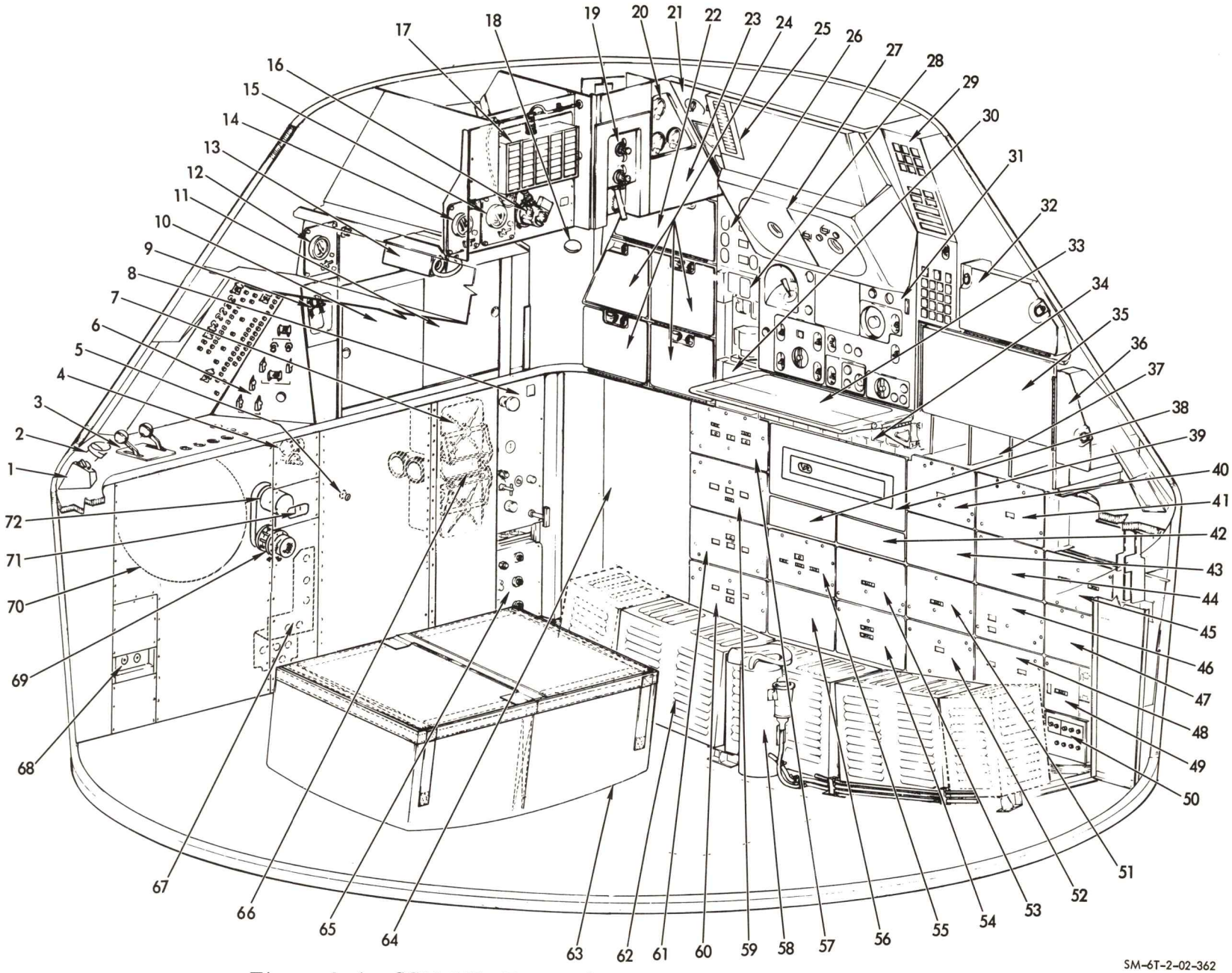

Figure 1-4. SCM LH, Forward, Lower, and Aft Equipment Bays

Table 1-2. SCM LH, Forward, Lower, and Aft Equipment Bays

Item No.	Nomenclature	AMS Status	Remarks
1	Lighting fixtures	Functional	
2	CCTV camera	Functional	
3	Girth frame shelf ECS controls	Functional	
4	Demand pressure and relief selector valve	Functional	Mounted behind removable attenuator panel.
5	Glycol accumulator shutoff valve	Functional	Mounted behind attenuator panel.
6	Left-hand side console (panel 24)	Functional	
7	CO_2-odor absorber diverters	Functional	Mounted behind removable attenuator panel.
8	Oxygen control panel	Functional	
9	Translation controller panel	Functional	
10	Food storage bin	Functional	
11	Clothing storage bin	Functional	
12	Left suit connector	Functional	
13	Water delivery system	Functional	Water service shutoff valve located at underside of panel.
14	Right suit connector	Functional	
15	Center suit connector	Functional	
16	Cabin temperature control valve	Functional	
17	Cabin air recirculating grill	Functional	
18	CCTV camera	Functional	
19	Food reconstitution device	Functional	
20	Clock and event timer panel	Functional	
21	Lighting control panel	Functional	
22	Food storage compartment	Functional	
23	Optical storage compartment	Functional	Located at underside of event and timer panel.
24	Food storage compartments	Functional	
25	G&N annunciator panel	Functional	
26	IMU-CDU panel	Functional	
27	Sextant-telescope shroud	Functional	
28	Rate gyro package	Dummied	
29	Computer control panel and DSKY	Functional	
30	Gyro and accelerometer package (AGAP)	Dummied	
31	G&N control panel	Functional	
32	Medical supplies compartment	Functional	
33	Workshelf	Functional	

Table 1-2. SCM LH, Forward, Lower, and Aft Equipment Bays (Cont)

Item No.	Nomenclature	AMS Status	Remarks
34	Power servo amplifier tray	Dummied	
35	Data storage equipment compartment	Functional	
36	Medical supplies compartment	Functional	
37	Signal conditioner	Functional	Contains modules for communications and data system.
38	Map and manual set compartment	Functional	
39	AGC computer	Dummied	AGC power switch functional.
40	PCM unit 1	Functional	Same as 37.
41	PCM unit 2	Functional	
42	Workshelf storage compartment	Functional	
43	Storage area C	Blank panel	
44	VHF multiplexer	Functional	Same as 37
45	Premodulation processor	Functional	Same as 37.
46	VHF/AM transmitter and VHF recovery beacon	Functional	Same as 37.
47	Audio center	Functional	Same as 37.
48	VHF/AM transmitter and HF transceiver	Functional	Same as 37.
49	Central timing equipment	Dummied	
50	Pyro battery panel	Functional	
51	S-band power amplifier	Functional	Same as 37.
52	C-band transponder	Functional	Same as 37.
53	Unified S-band equipment	Functional	Same as 37.
54	Up-data link	Dummied	
55	Roll ECA	Dummied	
56	Storage area B	Blank panel	
57	Display ECA	Dummied	
58	Fecal canister and relief tube	Functional	In position.
59	Yaw ECA	Dummied	
60	Pitch ECA	Dummied	
61	Auxiliary ECA	Dummied	
62	CO_2 absorber containers	Functional	End containers missing for SE-012.
63	Space suit storage	Functional	Collapsible unit
64	Open area		Gas chromatograph, storage area A and flight recorder occupy this space in S/C.
65	Water control panel	Functional	
66	CO_2 canister diverter valve	Functional	
67	Coolant control panel	Functional	

Table 1-2. SCM LH, Forward, Lower, and Aft Equipment Bays (Cont)

Item No.	Nomenclature	AMS Status	Remarks
68	Glycol pressure relief panel	Functional	
69	Suit circuit return air manual valve	Functional	Behind removable attenuator panel.
70	Surge tank	Dummied	
71	Midcourse couch support panel		
72	Debris trap	Dummied	

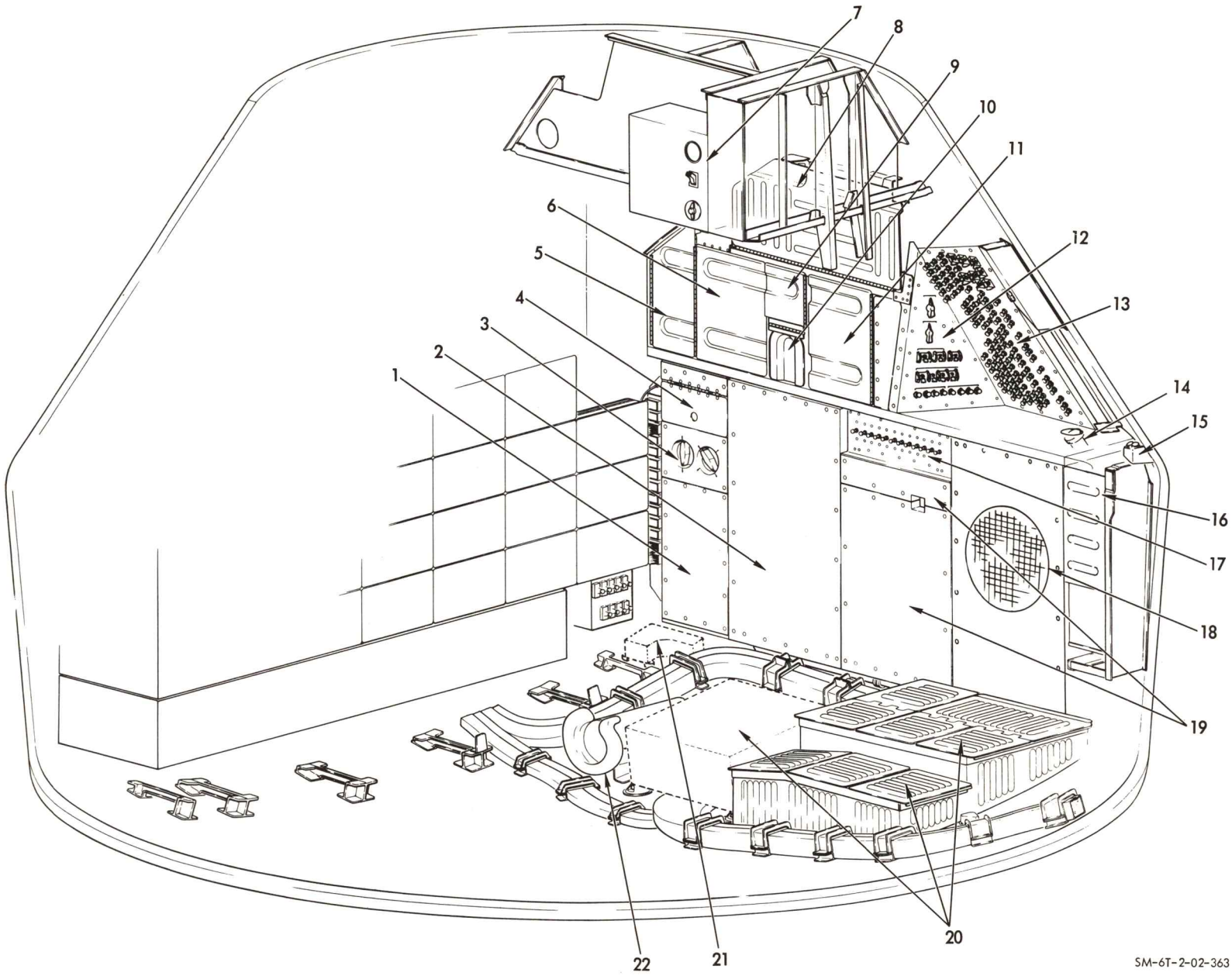

Figure 1-5. SCM RH, Forward, and Aft Equipment Bays

Table 1-3. SCM RH, Forward, and Aft Equipment Bays

Item No.	Nomenclature	AMS Status	Remarks
1	Battery vent panel	Blank	
2	Shock attenuator panel		
3	Waste management panel	Functional	
4	Vacuum cleaner compartment	Functional	Not functional in AMS No. 2
5	Sanitary supplies compartment	Functional	
6	Window shade storage compartment	Functional	
7	In-flight test panel	Functional	
8	Survival provisions storage compartment	Functional	Three separate compartments.
9	Food storage compartment	Functional	
10	Inlet to waste storage		
11	Personal hygiene supplies compartment	Functional	
12	Right-hand console bus switch panel	Functional	
13	Right-hand circuit breaker panel	Functional	
14	CCTV camera	Functional	
15	Lighting fixture	Functional	
16	PLSS CO_2 absorber storage area	Functional	
17	Electrical power circuit breaker panel	Functional	
18	Shock attenuator panel	Speaker panel	Instrument power control, uprighting, system, and ECS steam duct. Heating panels occupy this space in S/C.
19	Shock attenuator panels		
20	CO_2 absorber storage containers	Functional	Third container missing in SC-012.
21	TV zoom lens storage container		Container missing in SE-012.
22	Fecal canister and relief tube	Functional	Stowed position.

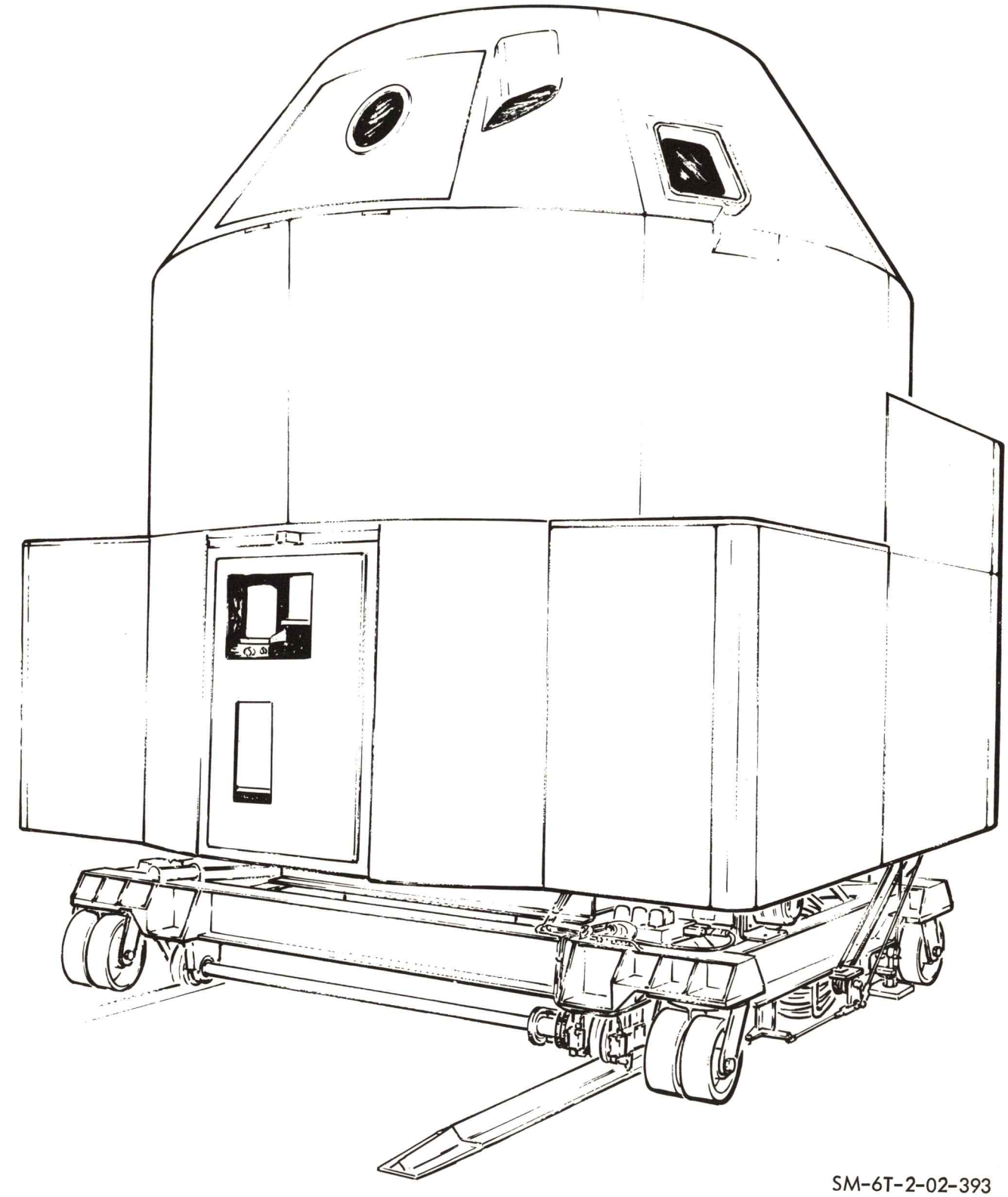

Figure 1-6. SCM Exterior

1.2.2 SCM CONTROLS AND DISPLAYS.

Figure 1-7 illustrates the controls and displays of the SCM main display panel and the left and right side panels. The appearance of the controls and displays are indiscernible from those of the spacecraft. Operation of the controls produces a realistic reaction of the corresponding displays and appropriate operational effects.

The function of, and instructor visibility to the status of, each control and indicator are described in tabular format in later paragraphs.

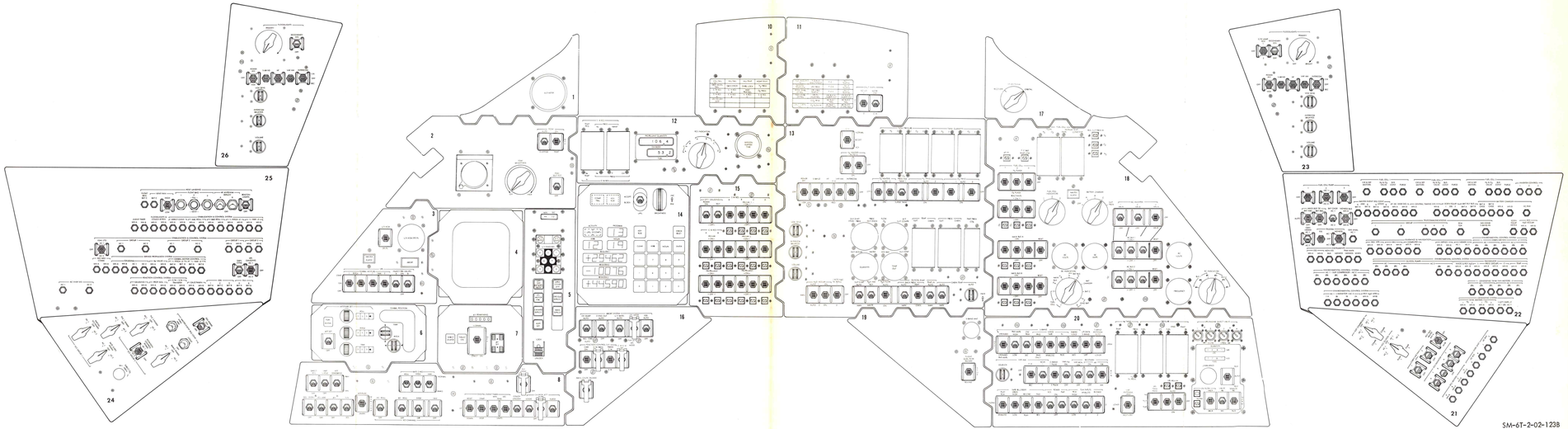

Figure 1-7. SCM Main Display Panel

1.2.3 VISUAL SIMULATION MECHANISMS.

The visual systems of the AMS provide realistic exterior scenes for viewing through the landing and docking windows, the telescope, and the sextant. Views simulated by the visual systems include the following:

- Earth and lunar scenes
- Celestial star fields and specific navigational stars
- Solar simulation including sunshafting, sunrise, sunset, and day-night termination
- Moving cloud cover
- S-IVB separation and transposition
- Reentry and landing scenes

The equipment and its arrangement used to generate and present the aforementioned scenes are illustrated in figure 1-1. Figure 1-8 identifies the components of the visual system with respect to the SCM. The major components that comprise the visual simulation are the mission effects projectors, the star field displays, the rendezvous and docking system, and the infinity image system. (See figure 1-8.)

The mission effects projectors provide the earth, moon, cloud cover, and reentry scenes in addition to solar simulation. In the AMS there are five MEPs which project these scenes to each of the windows and to the telescope display. There is no hatch window simulation in the SE-012 AMS.

The star field display presents the celestial background for each of the four windows and the telescope display.

The rendezvous and docking system provides the visual scenes during the separation and transposition maneuvers with the S-IVB. These scenes are only provided to the docking windows and are superimposed on the images provided by the MEP and the star fields. The equipment used to implement this simulation includes a scaled S-IVB model and a TV pickup system, which are housed in the R&D model house, and a CRT display system.

The infinity image system is the optical unit which combines the images from the MEPs, the star field displays, and the rendezvous and docking systems and projects them as one composite image to each of the windows and the telescope.

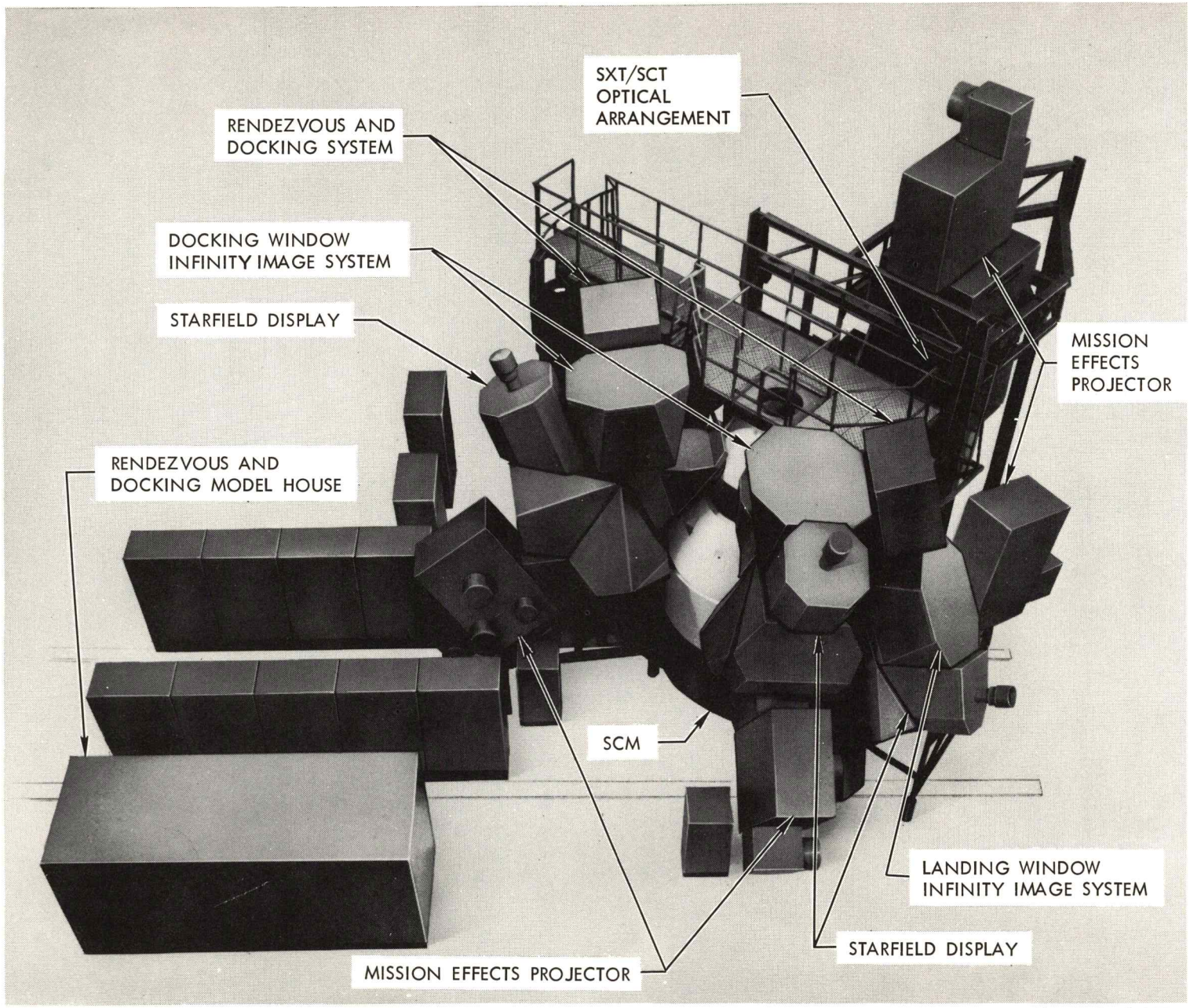

Figure 1-8. Visual Systems

1.2.4 STRUCTURES AND VERTICAL INSERTION.

The SCM consists of two major equipment items, the command module itself and the base assembly, which supports and positions the command module. In the assembly are the components for the following subsystems:

- SCM air conditioning
- Smoke generation
- Waste management (deleted for AMS No. 2)
- Water supply

The base assembly includes air conditioning equipment (excluding compressors), smoke generator and liquid smoke storage tank, potable water tank, waste management components and storage units, and the control panels, circuitry, transducers, and ducting and plumbing necessary for the above systems operation. Also, housed in the base assembly are the horizontal and vertical drive mechanisms and controls.

The SCM is capable of both horizontal and vertical movement under electrical or manual power. For horizontal movement, the base is equipped with V-grooved wheels which ride upon inverted angle tracks extending out approximately 14-1/2 feet from under the center of the visual equipment. (See figure 1-1.) The only connections to the moving unit are the electrical cables and the compressed air line for the oxygen pressure suit system. The cables and compressed air line are supported by a boom assembly that pivots as the SCM is withdrawn horizontally. The boom assembly is supported by a support bar, which is equipped with a wheel to facilitate movement. A detachable tow bar connects the support bar to the SCM for the flexibility required during movement. Horizontal drive is accomplished through two forward wheels and a clutch mechanism on the SCM base. (See figure 1-9.)

Vertical motion is accomplished by four lead screw jacks capable of providing a maximum of 27 inches of vertical travel. When no power is available, hand cranks located on the right-hand side of the SCM base may be used to manually move the SCM horizontally and/or vertically. The crank mechanism is interlocked to assure that horizontal motion is not possible until the vertical motion is complete (as is the case during powered movement). Detailed operational procedures for the mechanism are defined in section I of Volume II.

As illustrated in figure 1-1, a walkway is provided which affords access to the visual equipment and to the tunnel hatch and tunnel. The walkway also provides structural support for the sextant and telescope shroud and the G&N annunciator panel and a rigid mounting for two auxiliary hoists used for servicing the rendezvous display units. The walkway is 16-1/2 feet above the floor and is equipped with a 42-inch handrailing. Access to the walkway is provided by a spiral stairway equipped with a 36-inch handrailing.

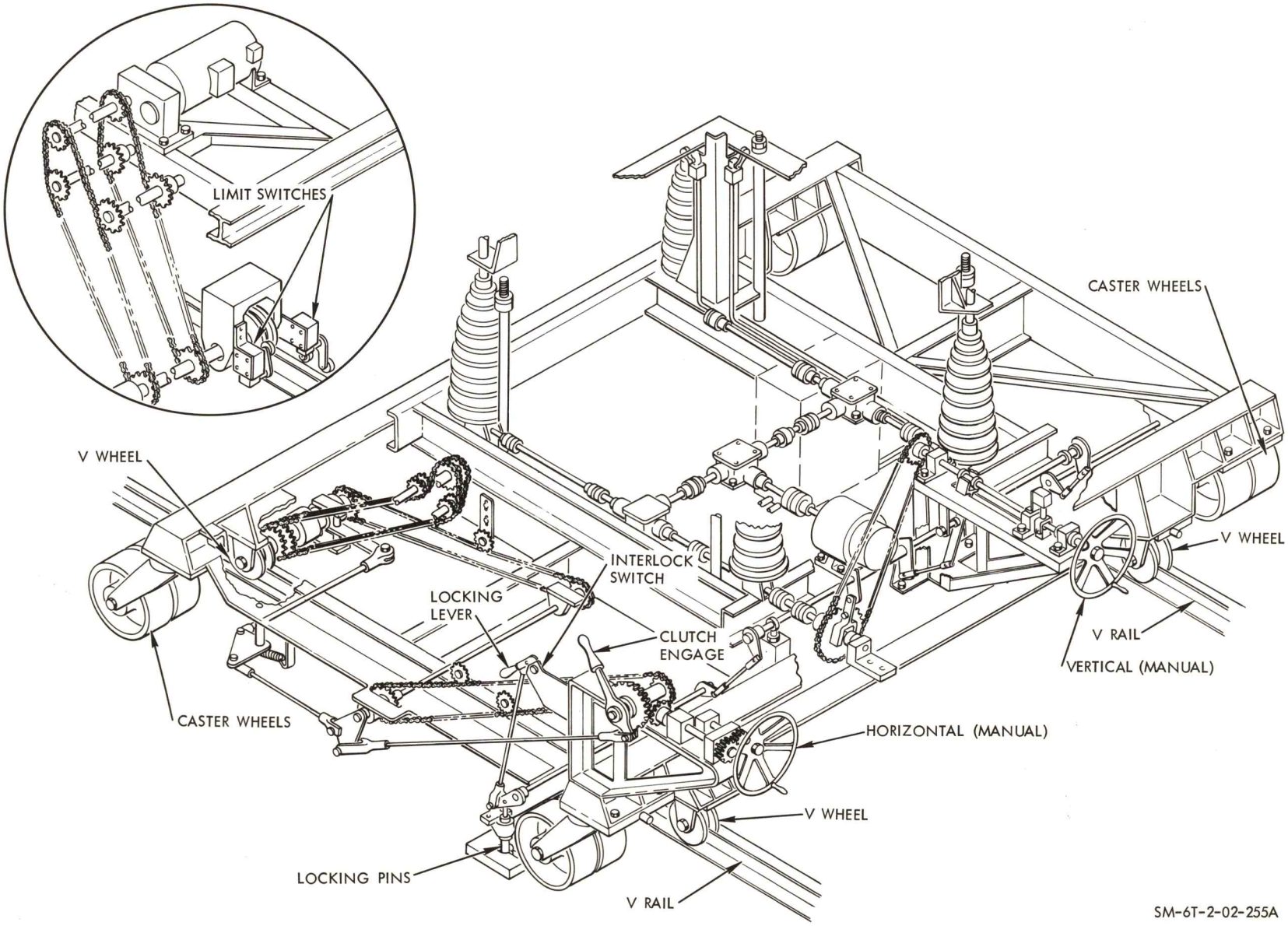

Figure 1-9. Vertical and Horizontal Insertion Mechanism

1.3 INSTRUCTOR-OPERATOR STATION.

The instructor-operator station (IOS) is the control center from which the simulator complex is operated. Simulator control and monitor functions accomplished from the IOS include:

- Control and monitor simulator operation.
- Record training evaluation parameters.
- Select and control simulated malfunctions.
- Control and monitor computer operation.
- Communicate with flight crew and support personnel.
- Monitor and control trainer support systems.

Figure 1-10 is an illustration of the AMS instructor-operator console. The console is a wraparound design to provide maximum visibility to all controls and displays from the master (center) station. Each console section has independent fluorescent overhead lighting and storage space under the console counter. The IOS contains repeater indicators of those controls and displays within the simulated command module (SCM) and additional controls and displays as required to enable the instructor-operator(s) to effectively control the simulation, direct the training situation, and monitor crew activities taking place within the SCM. Figure 1-11 and table 1-4 are provided to illustrate the overall instructor-operator console controls and displays layout and identify each panel by name and explain its function. The identity and function of each control and indicator is defined in figures and tables provided later in this section of the handbook.

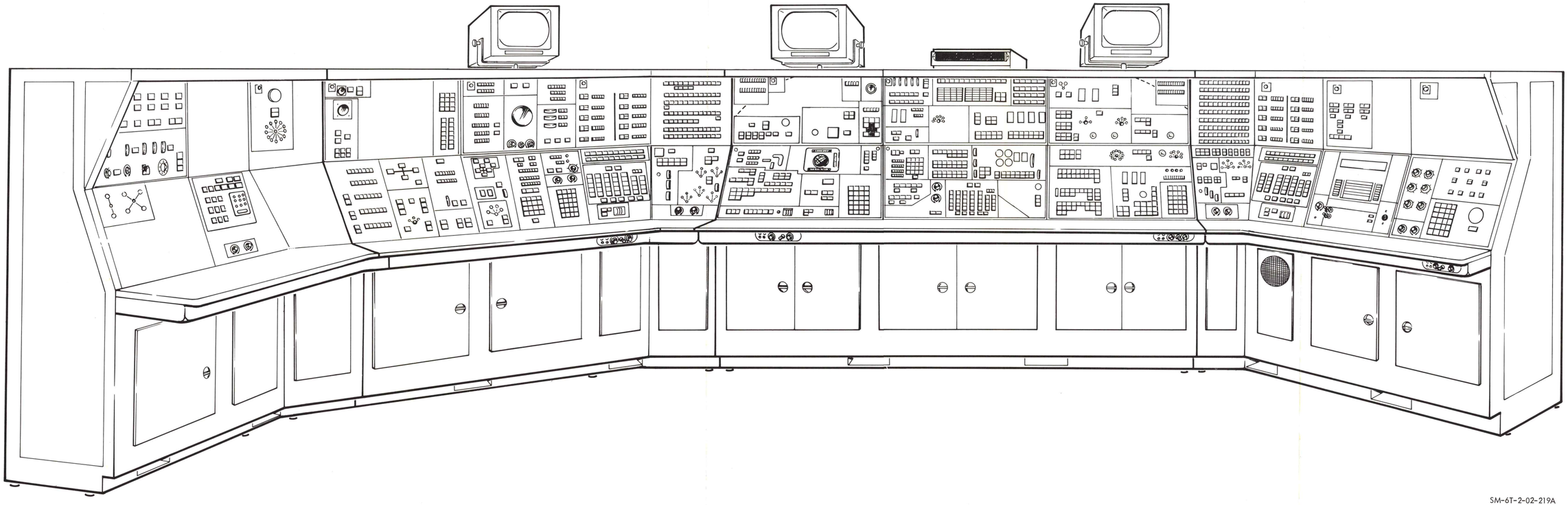

SM-6T-2-02-219A

Figure 1-10. IOS Simulator Console (Perspective)

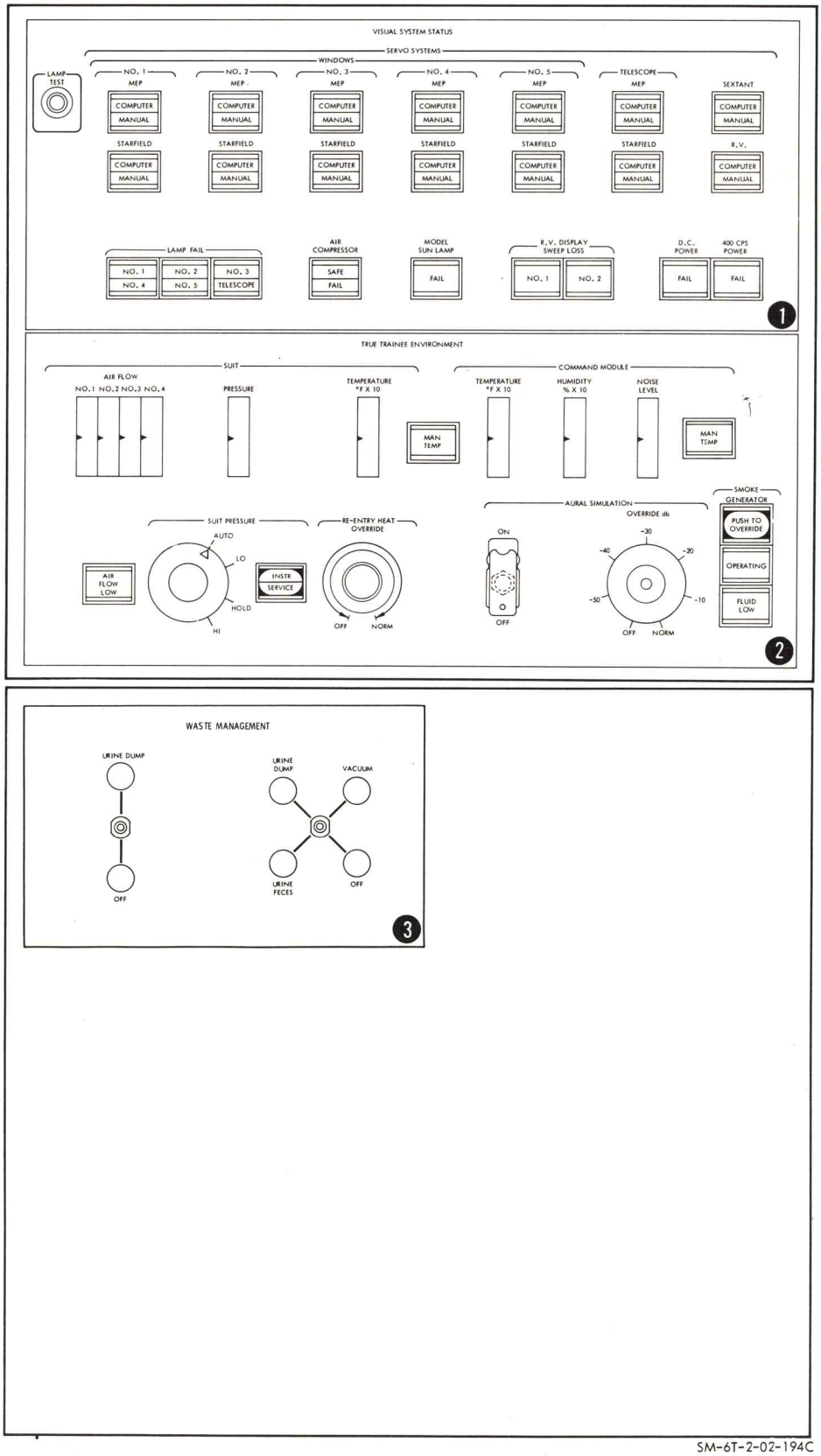

SM-6T-2-02-194C

Figure 1-11. IOS Simulator Console (Sheet 1 of 15)

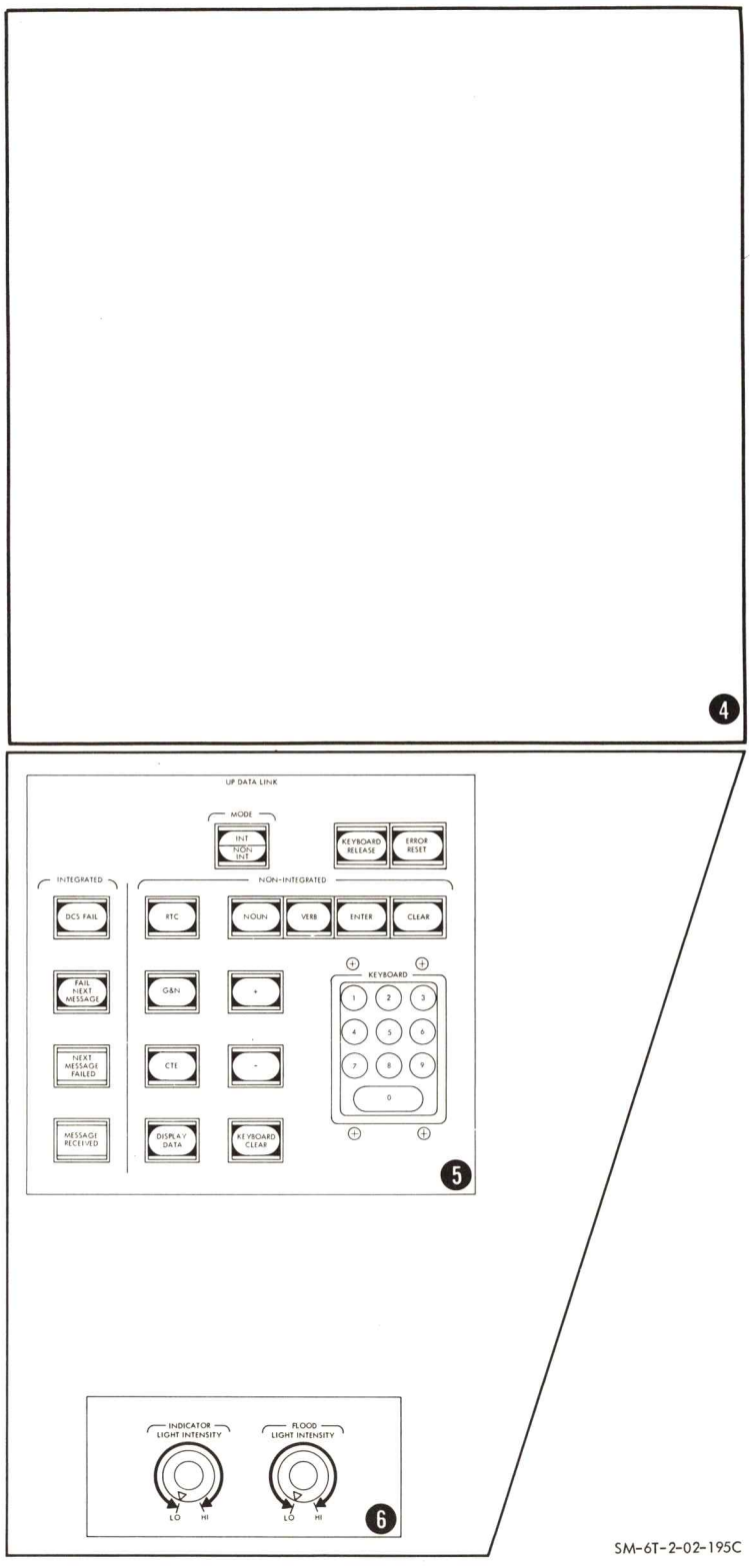

Figure 1-11. IOS Simulator Console (Sheet 2 of 15)

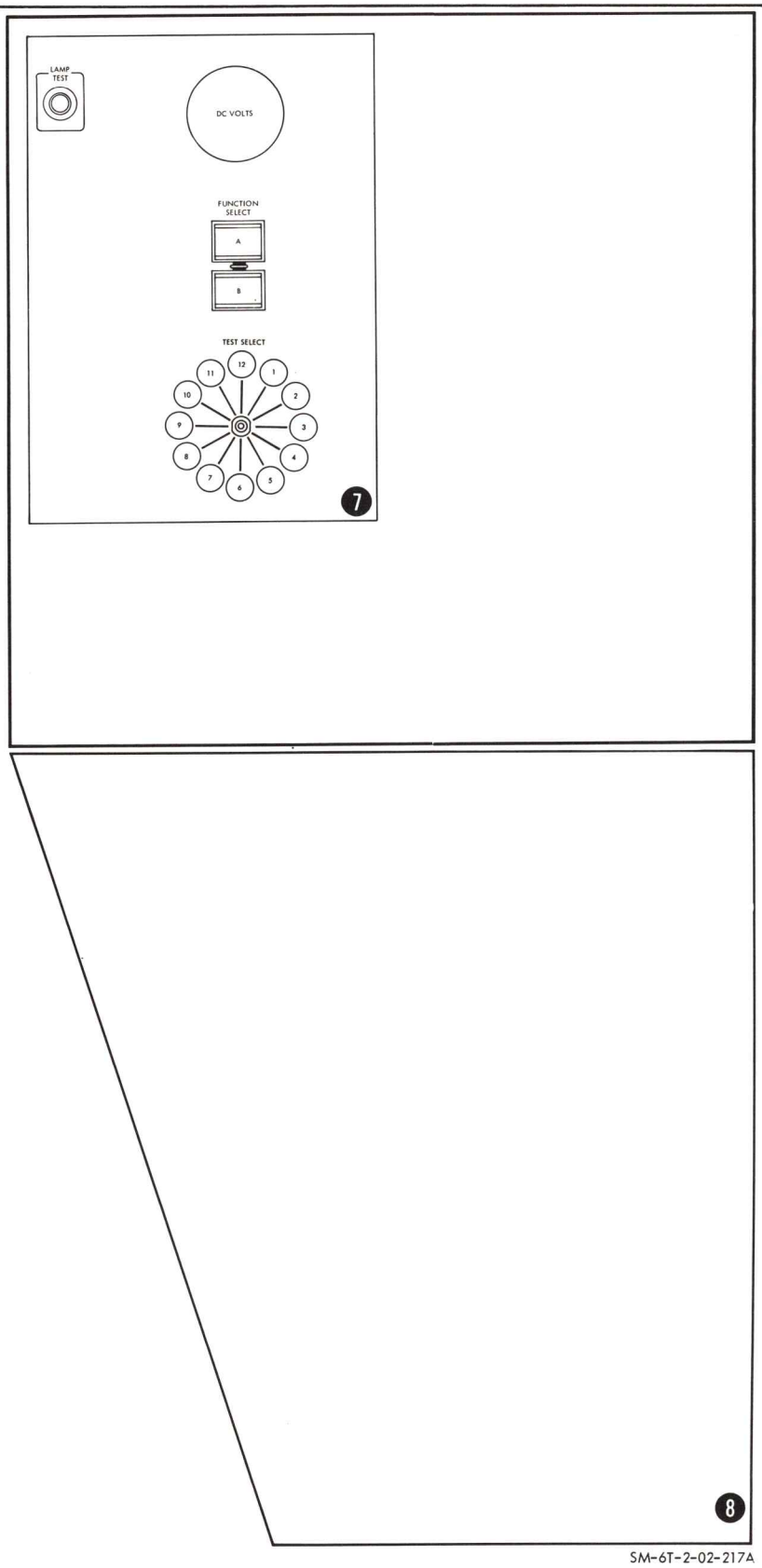

Figure 1-11. IOS Simulator Console (Sheet 3 of 15)

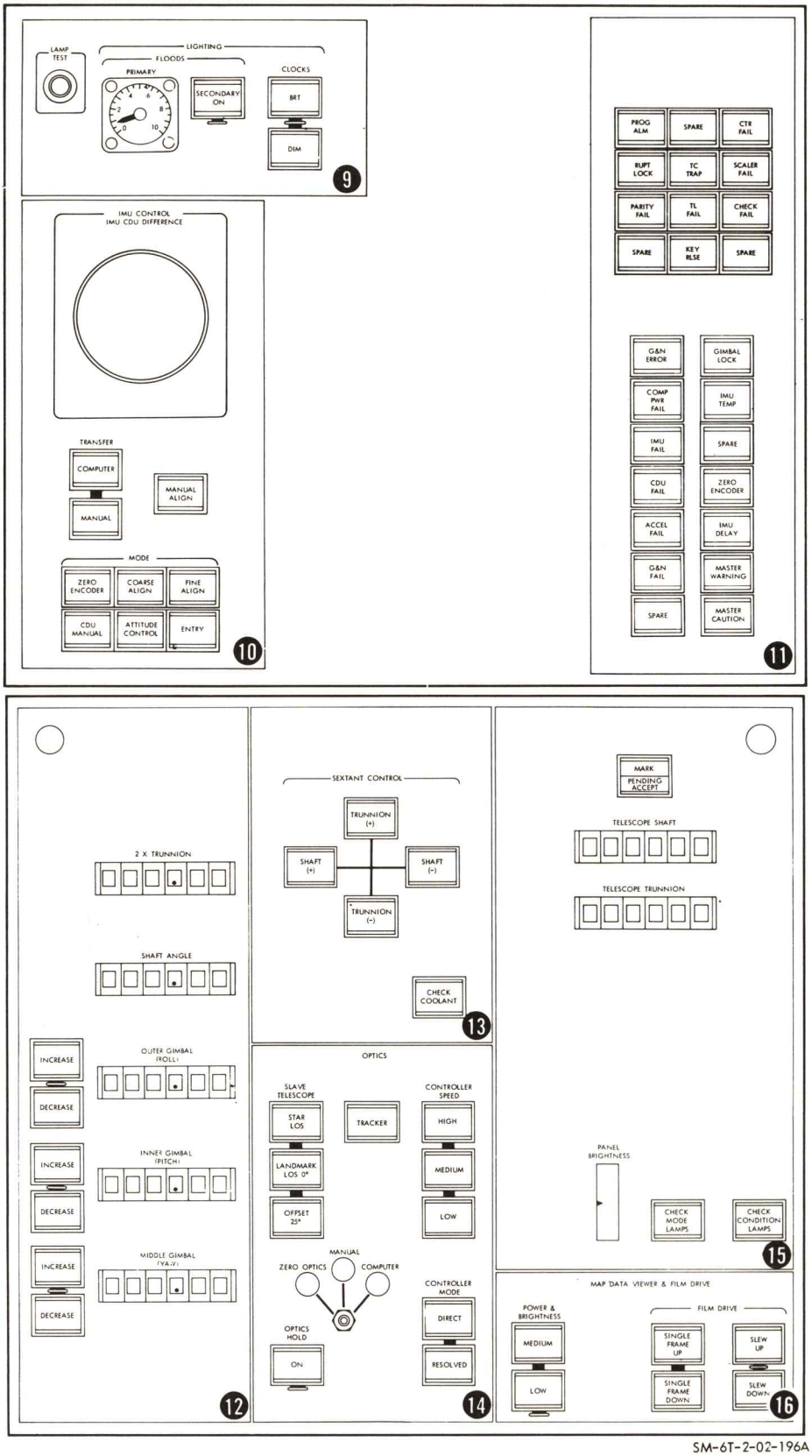

SM-6T-2-02-196A

Figure 1-11. IOS Simulator Console (Sheet 4 of 15)

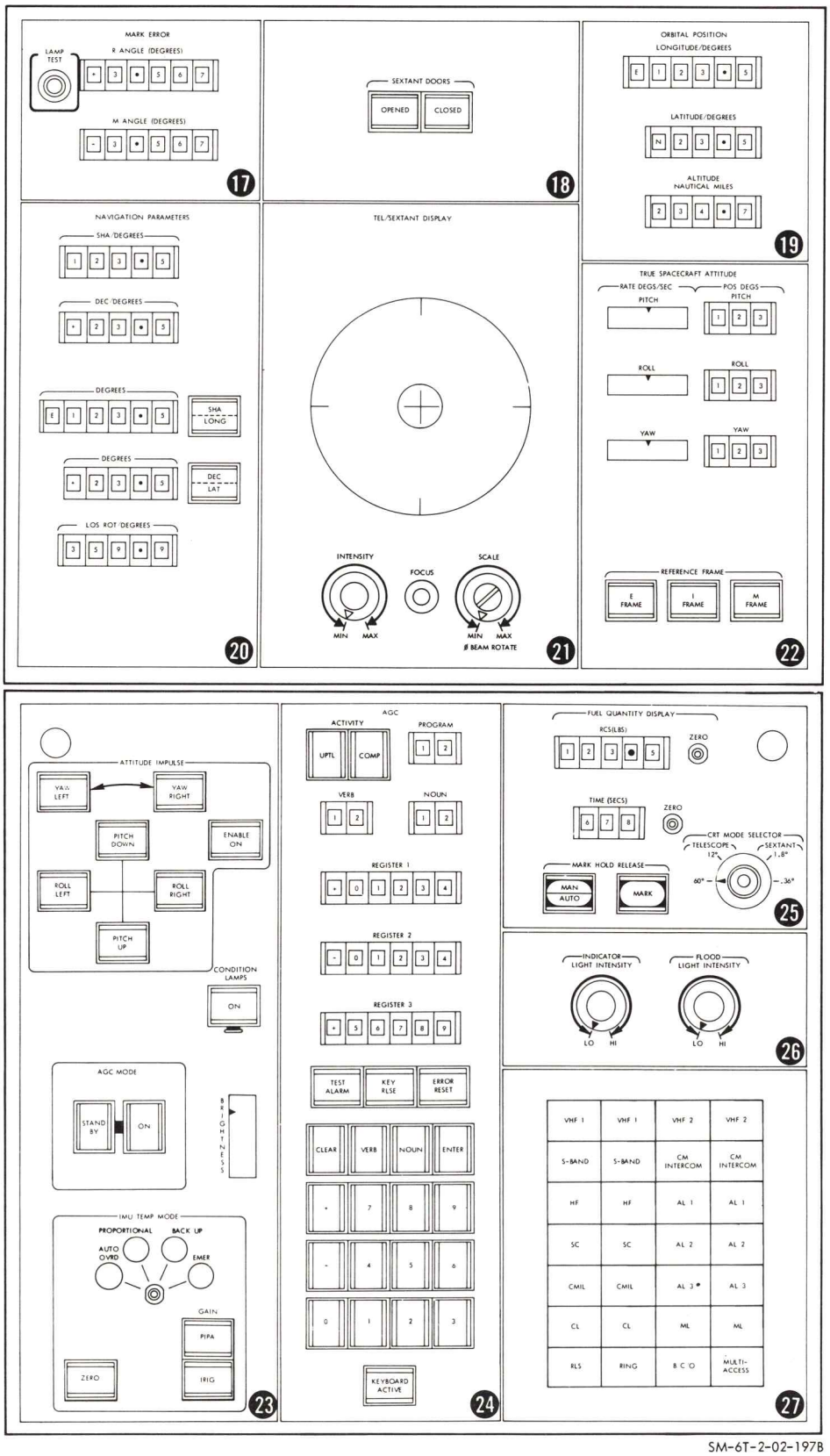

SM-6T-2-02-197B

Figure 1-11. IOS Simulator Console (Sheet 5 of 15)

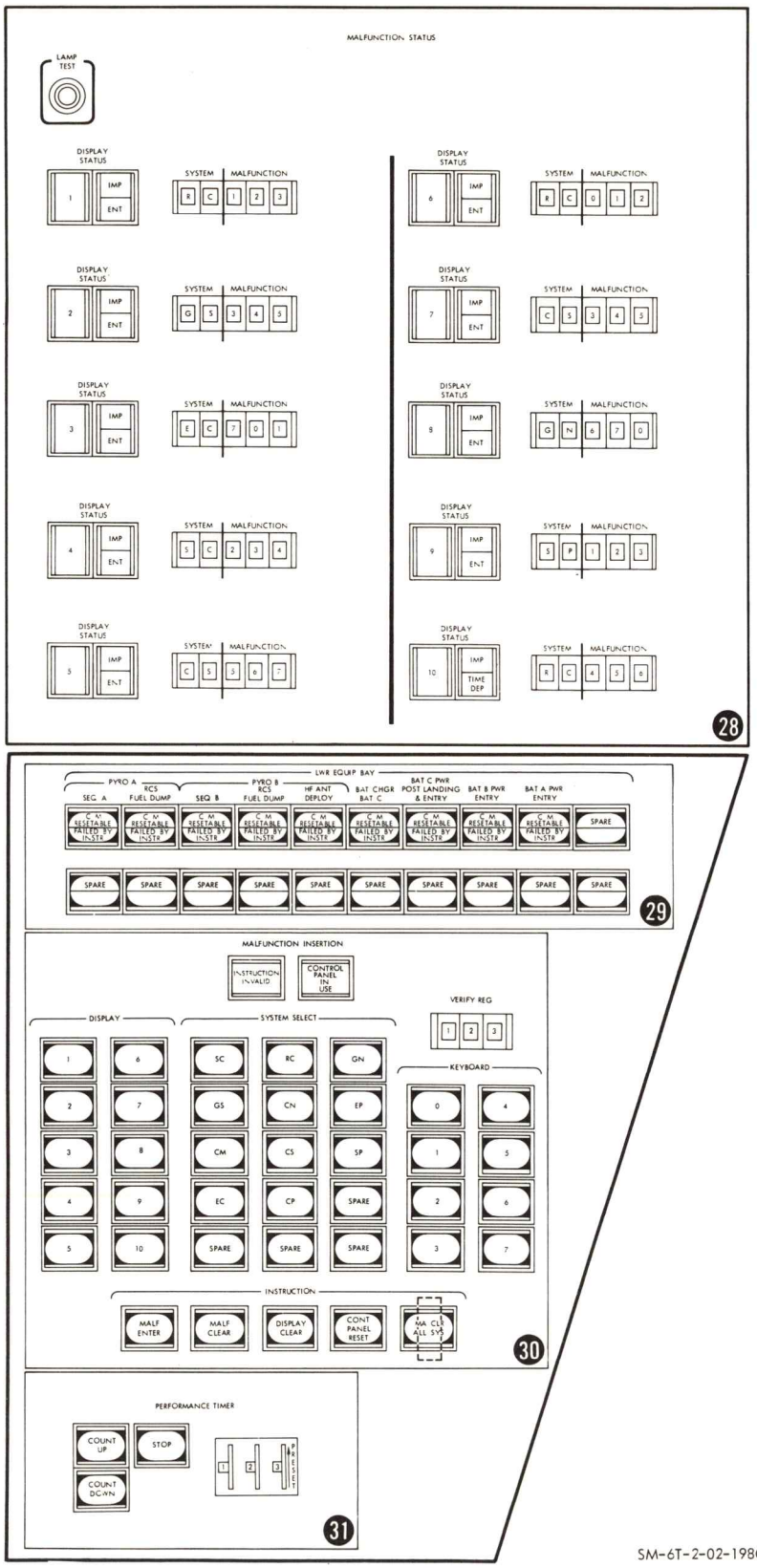

Figure 1-11. IOS Simulator Console (Sheet 6 of 15)

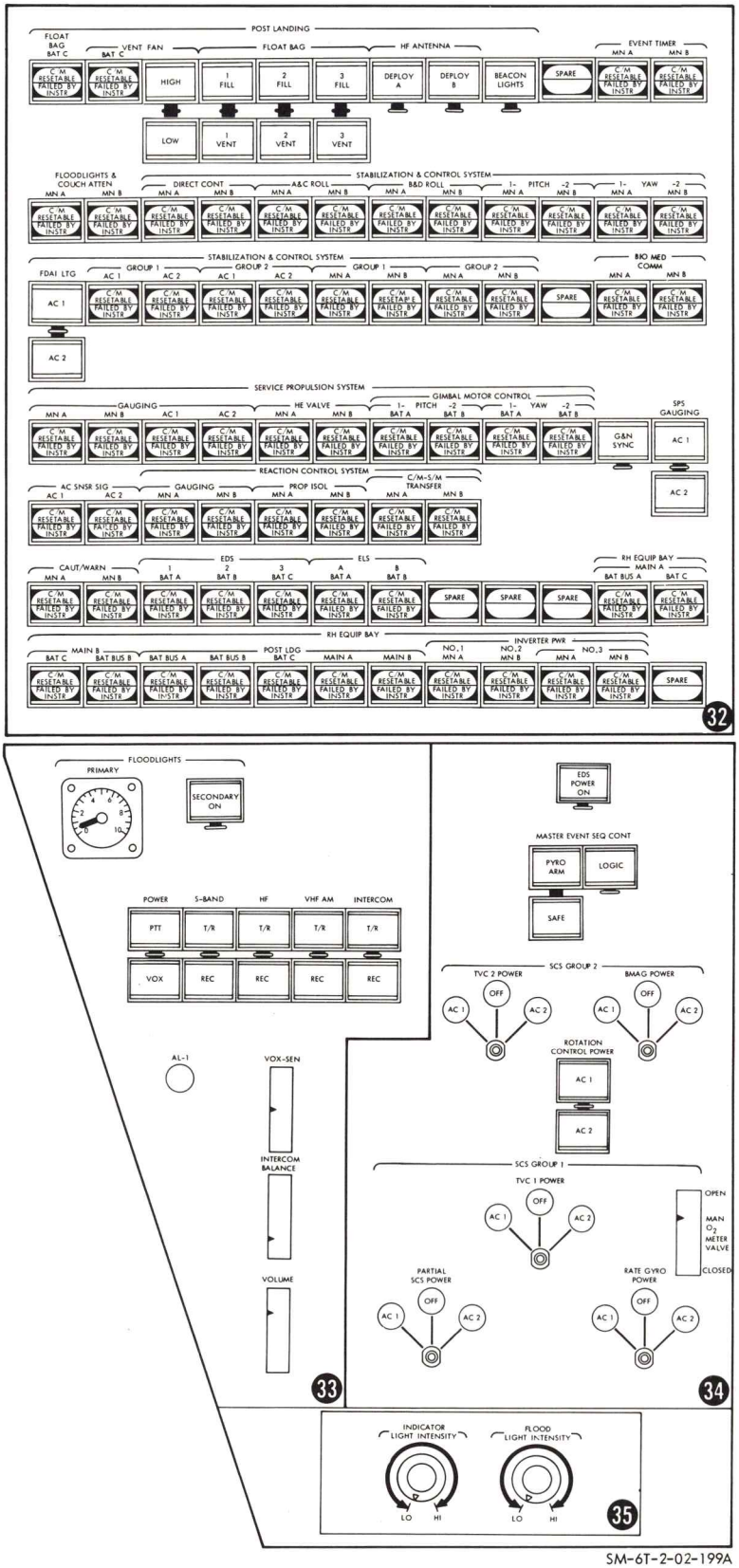

SM-6T-2-02-199A

Figure 1-11. IOS Simulator Console (Sheet 7 of 15)

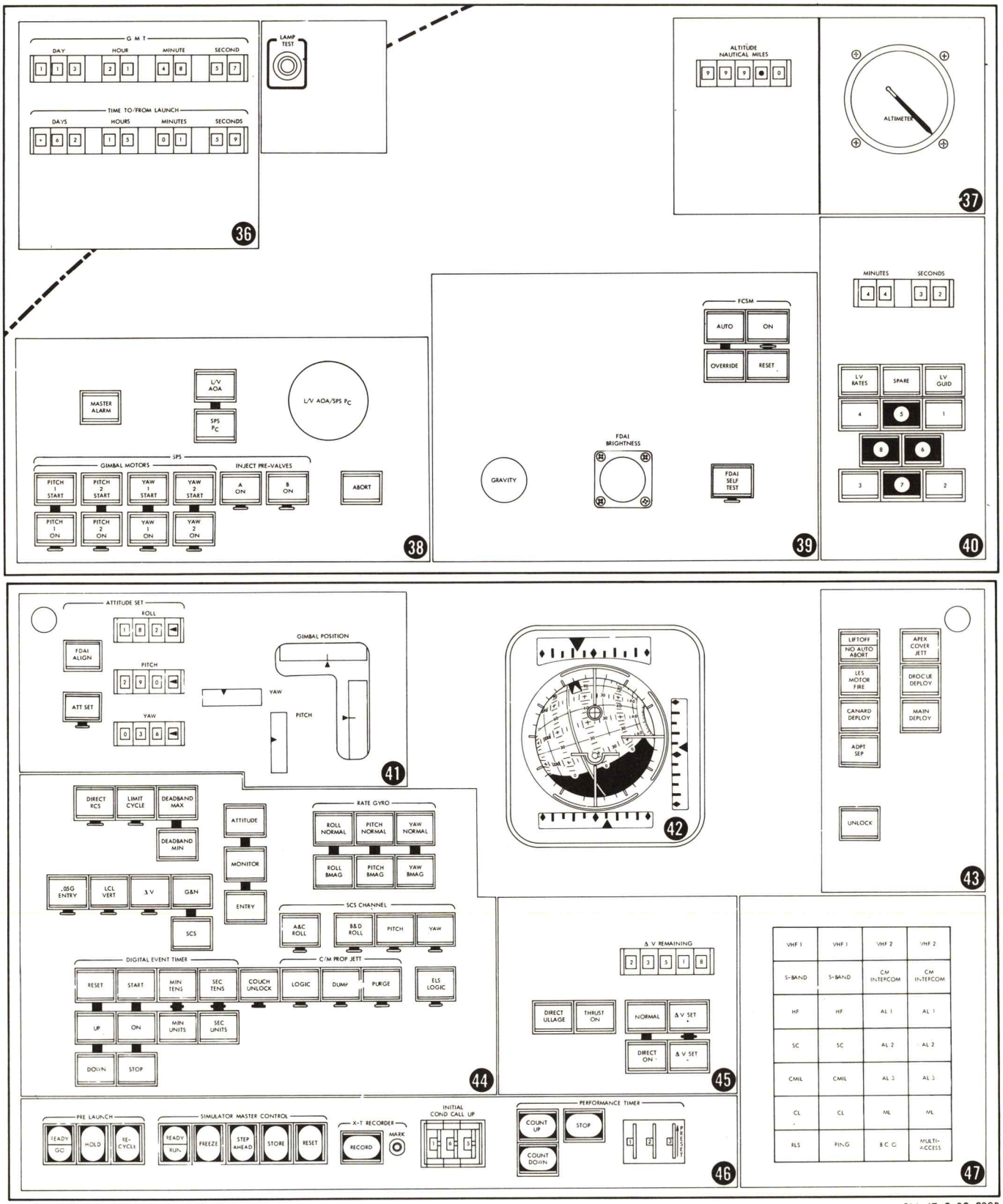

SM-6T-2-02-2008

Figure 1-11. IOS Simulator Console (Sheet 8 of 15)

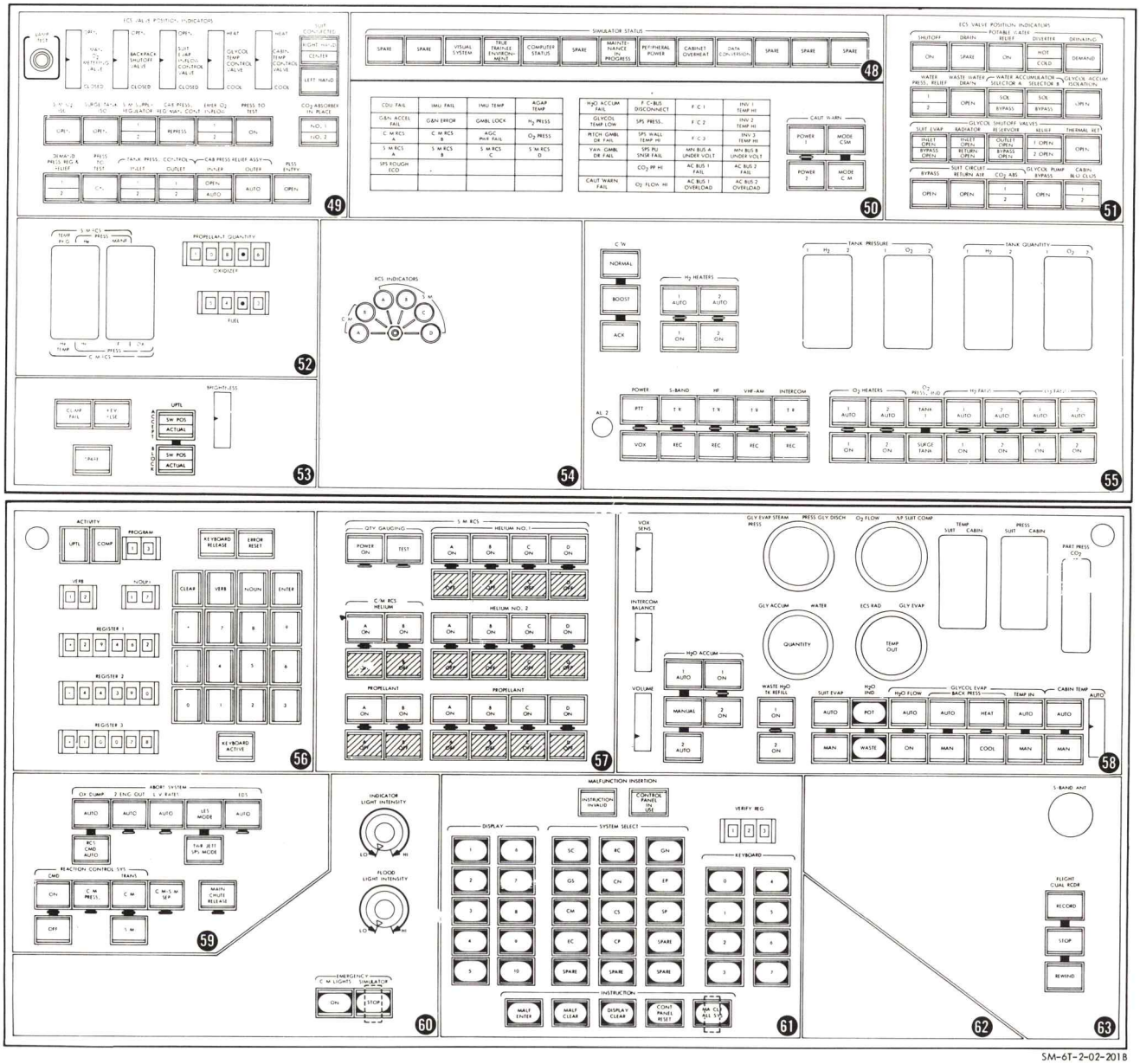

Figure 1-11. IOS Simulator Console (Sheet 9 of 15)

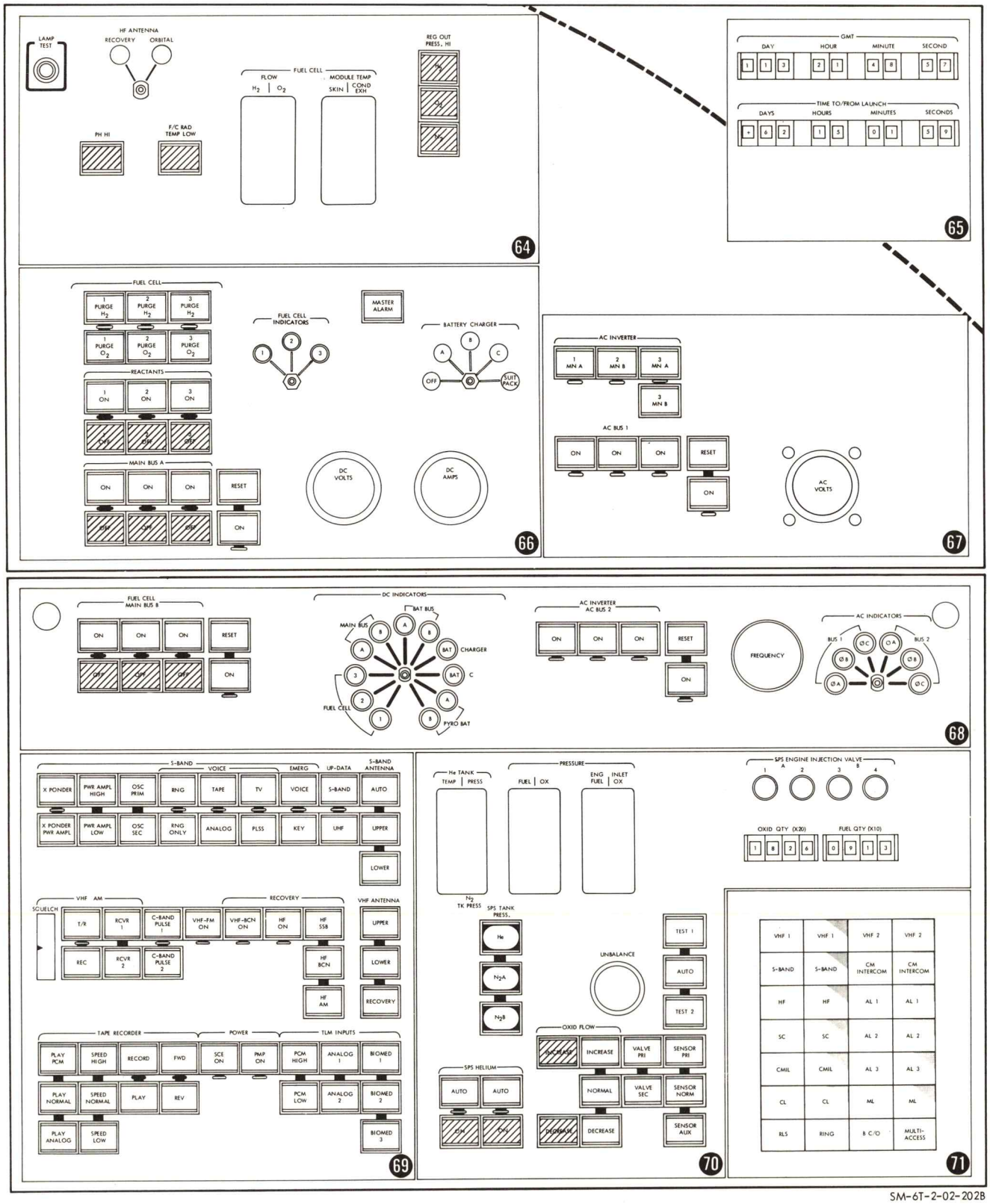

SM-6T-2-02-202B

Figure 1-11. IOS Simulator Console (Sheet 10 of 15)

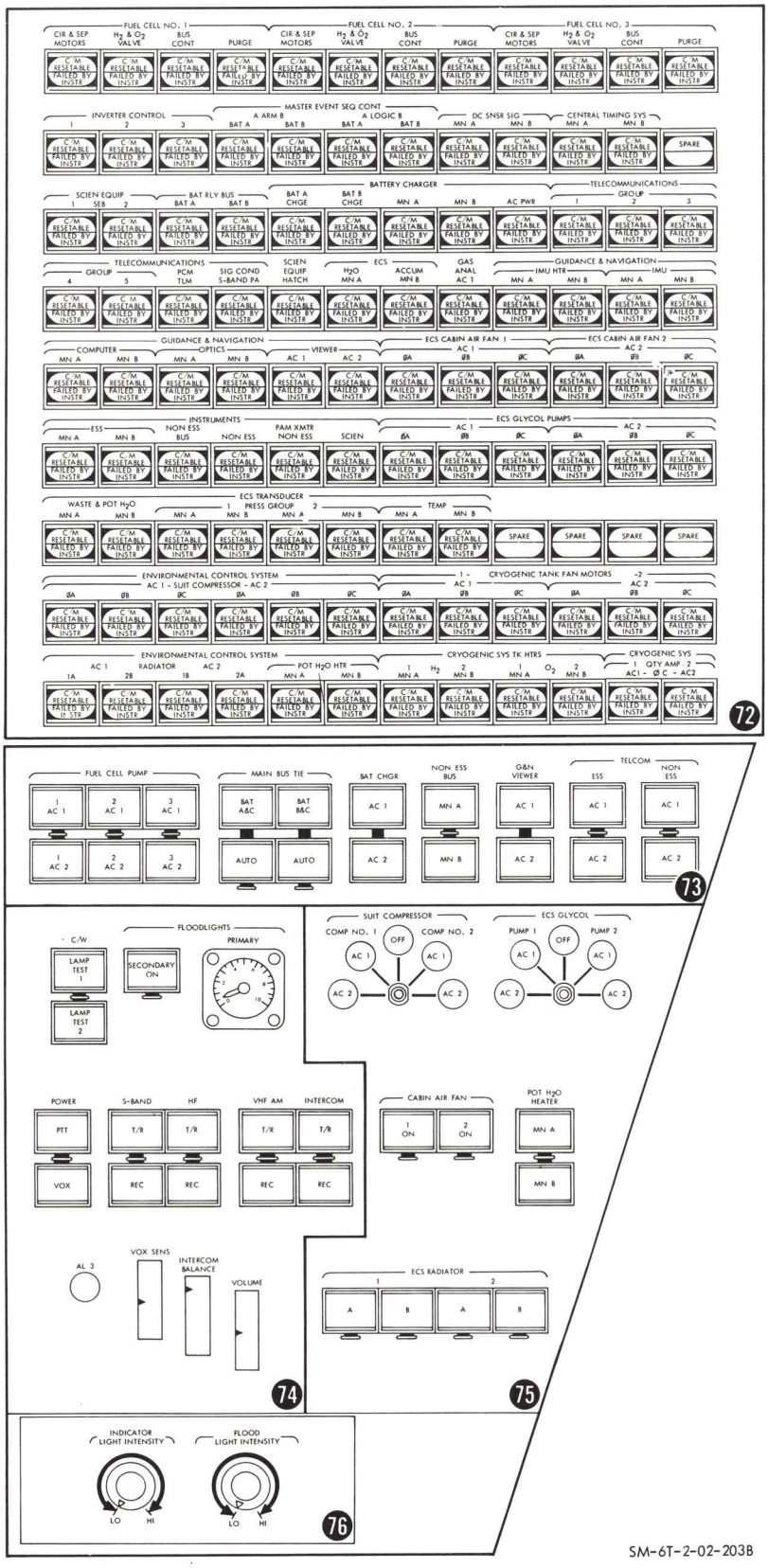

Figure 1-11. IOS Simulator Console (Sheet 11 of 15)

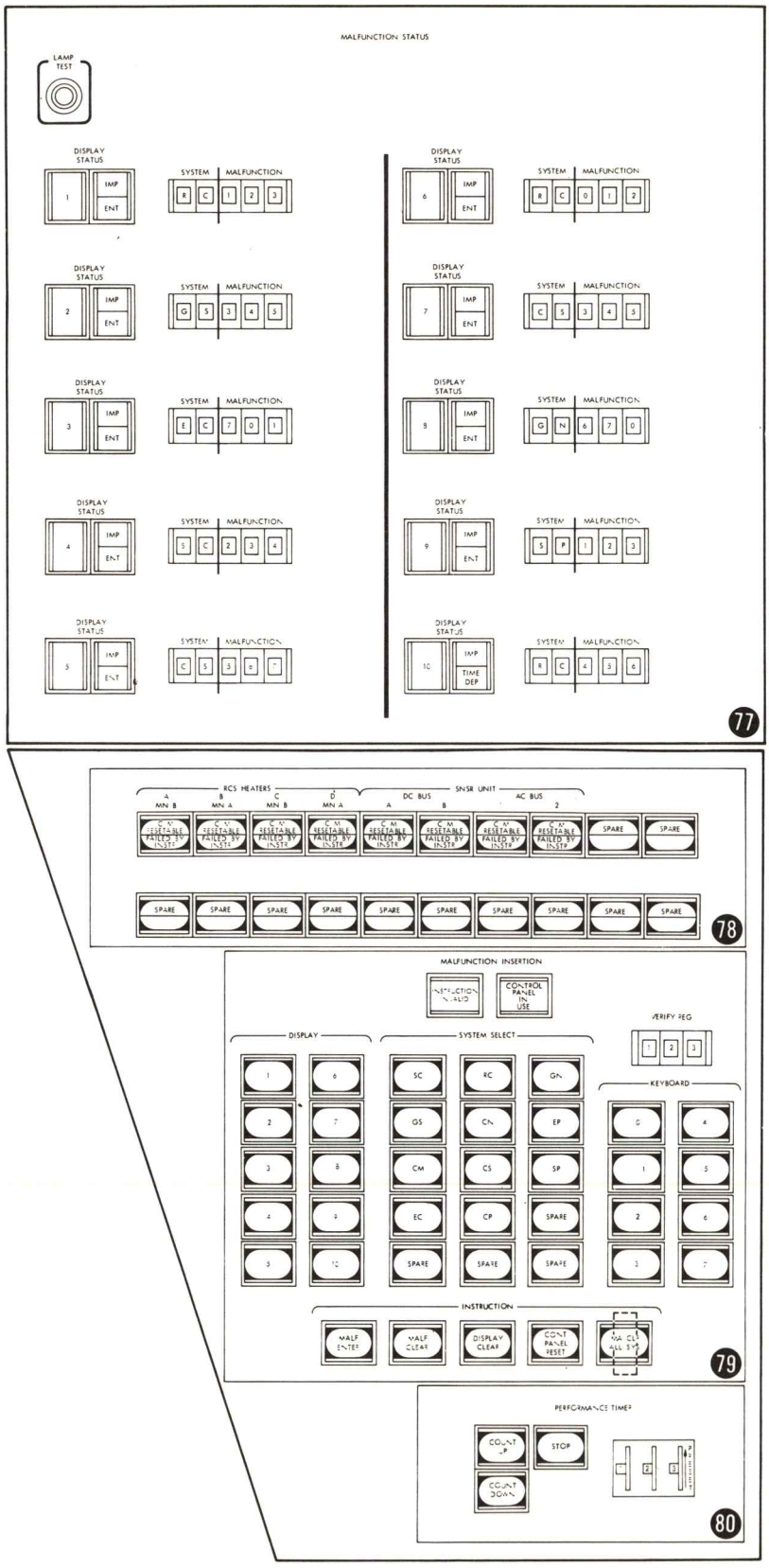

SM-6T-2-02-204C

Figure 1-11. IOS Simulator Console (Sheet 12 of 15)

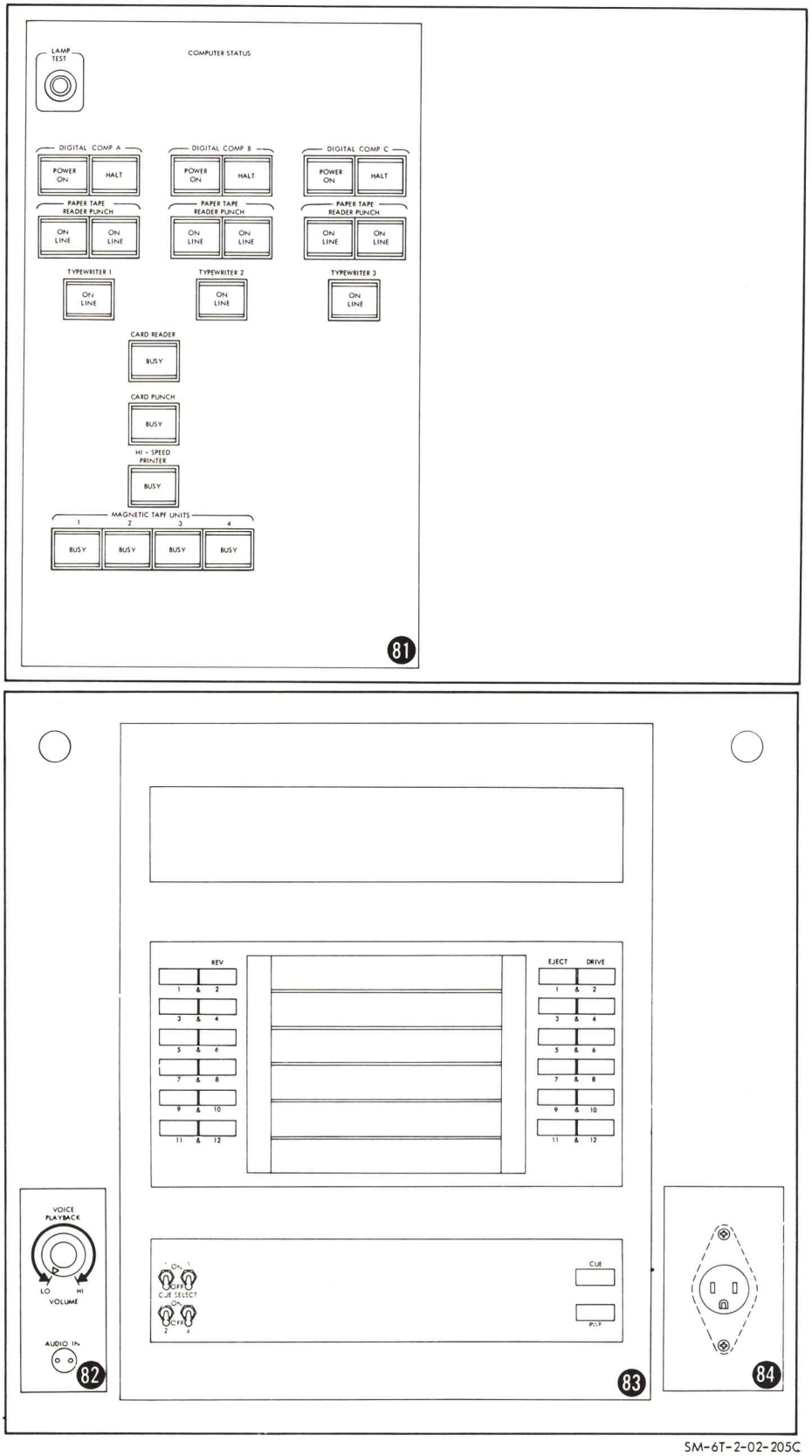

SM-6T-2-02-205C

Figure 1-11. IOS Simulator Console (Sheet 13 of 15)

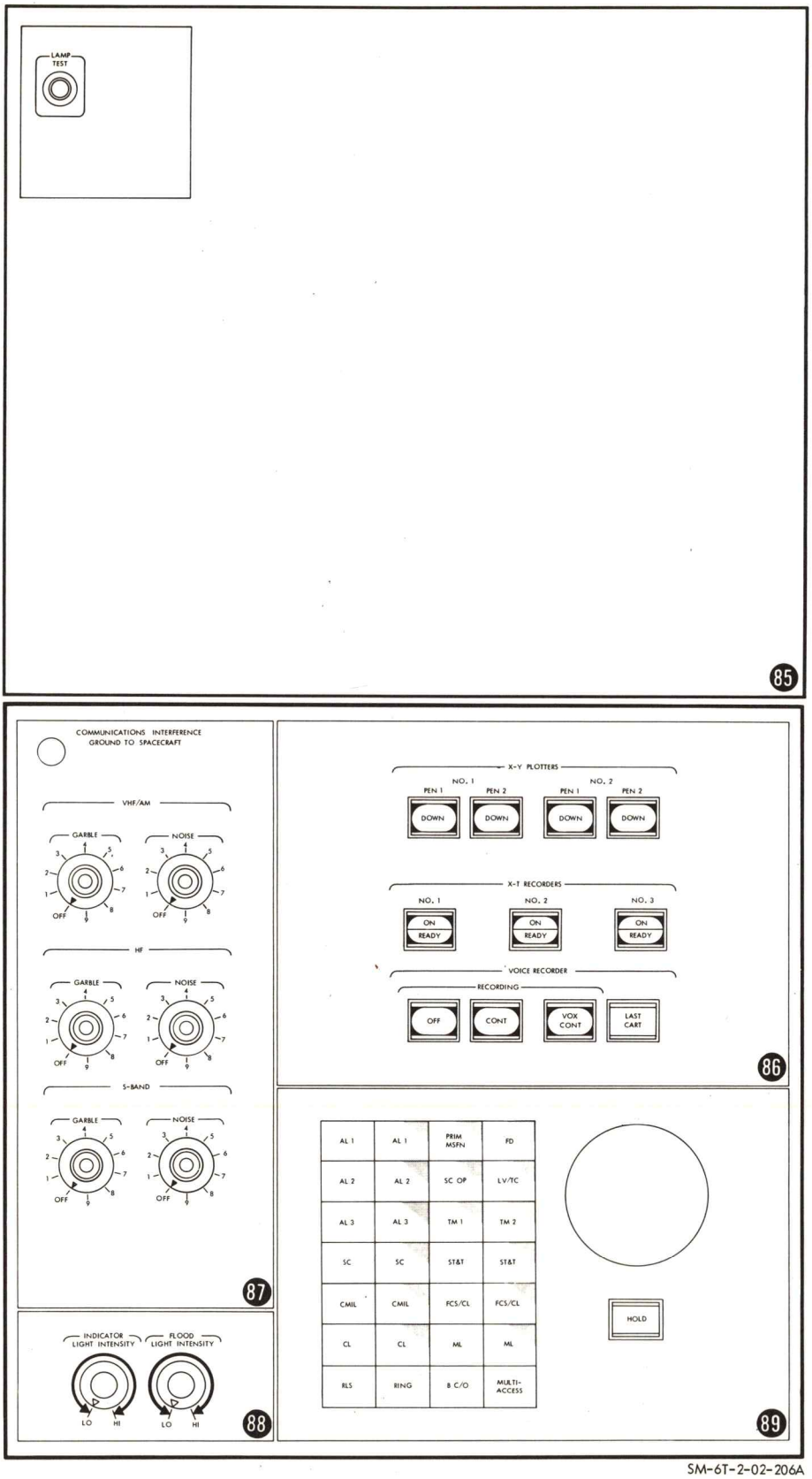

SM-6T-2-02-206A

Figure 1-11. IOS Simulator Console (Sheet 14 of 15)

SCM SWITCH	IOS SWITCH POSITION IND	IOS SWITCH POSITION INDICATOR FUNCTIONAL DESCRIPTION
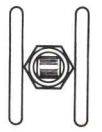	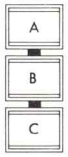	A) ILLUMINATES WHEN SWITCH IN SCM IS SET TO POSITION 1 B) ILLUMINATES WHEN SWITCH IN SCM IS SET TO POSITION 2 C) ILLUMINATES WHEN SWITCH IN SCM IS SET TO POSITION 3
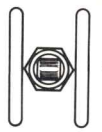	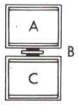	A) ILLUMINATES WHEN SWITCH IN SCM IS SET TO POSITION 1 B) INDICATES NORMAL OFF POSITION OF SCM SWITCH (DOES NOT ILLUMINATE) C) ILLUMINATES WHEN SWITCH IN SCM IS SET TO POSITION 2
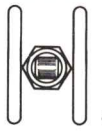	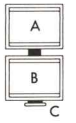	A) ILLUMINATES WHEN SWITCH IN SCM IS SET TO POSITION 1 B) ILLUMINATES WHEN SWITCH IN SCM IS SET TO POSITION 2 C) INDICATES NORMAL OFF POSITION OF SCM SWITCH (DOES NOT ILLUMINATE)
	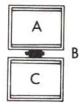	A) ILLUMINATES WHEN SWITCH IN SCM IS SET TO POSITION 1 B) INDICATES CENTER AS NORMAL POSITION OF SCM SWITCH (DOES NOT ILLUMINATE) C) ILLUMINATES WHEN SWITCH IN SCM IS SET TO POSITION 2
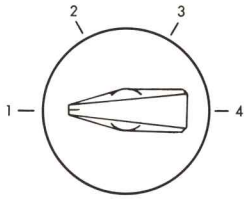	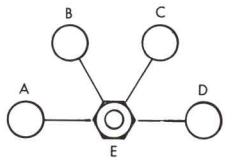	A) ILLUMINATES WHEN SELECTOR SWITCH IN SCM SET TO POSITION 1 B) ILLUMINATES WHEN SELECTOR SWITCH IN SCM SET TO POSITION 2 C) ILLUMINATES WHEN SELECTOR SWITCH IN SCM SET TO POSITION 3 D) ILLUMINATES WHEN SELECTOR SWITCH IN SCM IS SET TO POSITION 4 E) WHEN DEPRESSED, CHECKS LAMPS OF IOS SELECTOR SWITCH POSITION INDICATOR
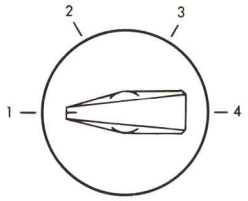	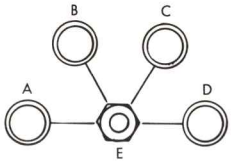	A) ILLUMINATED WHEN SELECTOR SWITCH IN SCM IS SET TO POSITION 1, OR WHEN NOT ILLUMINATED INSTRUCTOR MAY DEPRESS TO MONITOR THAT FUNCTION ON IOS DISPLAY B) SAME AS A C) SAME AS A D) SAME AS A E) WHEN DEPRESSED, CHECKS LAMPS OF IOS SELECTOR SWITCH POSITION INDICATOR
	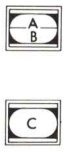	A) WHEN DEPRESSED, UPPER HALF OF SWITCH ILLUMINATES BLUE AND EQUIPMENT IS TURNED ON OR STARTED. B) WHEN DEPRESSED THE SECOND TIME, LOWER HALF OF SWITCH ILLUMINATES AND SWITCH FUNCTION IS IN EFFECT. C) WHEN DEPRESSED, SWITCH ILLUMINATES BLUE AND EQUIPMENT IS TURNED ON OR STARTED.

SM-6T-2-02-223A

Figure 1-11. IOS Simulator Console (Sheet 15 of 15)

Table 1-4. Instructor-Operator Station

Panel	Nomenclature	Function
1	VISUAL SYSTEM STATUS	Displays mode and status of visual system components.
2	TRUE TRAINEE ENVIRONMENT	C&D of suit pressure, temperature, aural simulation, and smoke generation.
3	WASTE MANAGEMENT	Repeat of SCM waste management system panel.
4	(Blank)	
5	UP DATA LINK	C&D of up-data link panel.
6	Lighting controls	IOS light controls.
7	In-flight test panel	Repeat of SCM in-flight test panel.
8	(Blank)	
9	Lighting controls	Repeat of SCM LEB floodlight panel.
10	IMU-CDU repeater	IMU-CDU repeater and SCM flight control repeater.
11	G&N computer status	Indication of G&N alarms and faults.
12	CDU repeater	Repeat of SCM CDU indications.
13	SEXTANT CONTROL	Indication of SCM SXT control operation.
14	OPTICS	Indication of operation of optics controls in LEB.
15		Repeat of lower equipment bay (LEB) optics control panel, lighting controls, lamp check switch, and SCT shaft and trunnion readouts.
16	MAP/DATA VIEWER & FILM DRIVE	Indication of map and data viewer (MDV) control operation.
17	MARK ERROR	Indication of optical axis angle error.
18	SEXTANT DOORS	Indication of astrosextant doors status.
19	ORBITAL POSITION	Latitude, longitude, and altitude indicators.
20	NAVIGATION PARAMETERS	Display of sidereal hour angle (SHA), declination, SHA/ longitude, declination/latitude, and IOS rotation.
21	TEL/SEXTANT DISPLAY	CRT display of optics positioning.
22	TRUE SPACECRAFT ATTITUDE	True rate and position indications, and reference frame being used.
23		Indication of attitude impulse, AGC mode, and IMU temperature control operation.
24	AGC	Apollo guidance control display and keyboard (DSKY), and three register readouts.
25		Fuel quantity display, timer, and mark hold release. CRT mode selector controls.
26		Flood and indicator lighting controls.
27	Console communications panel	Provides trainer communications.
28	MALFUNCTION STATUS	Display of malfunction and indication of malfunction status.
29		Control and status of lower equipment bay circuit breakers.
30	MALFUNCTION INSERTION	Keyboard to control malfunction insertion.
31	PERFORMANCE TIMER	Provides means for timing to or from events.

Table 1-4. Instructor-Operator Station (Cont)

Panel	Nomenclature	Function
32		Control and status of left-hand circuit breaker panel and right-hand equipment bay circuit breaker panel.
33		Repeater indicator of floodlight controls and SCD audio control panel (SCM panel No. 26).
34		Indication of position and operation of SPS and SCS controls (SCM panel No. 24).
35		Controls for IOS flood and indicator lighting.
36		Provides GMT and time-to/from launch from centeral timing equipment.
37		Provides repeat of SCM altimeter and digital readout of altitude (SCM panel No. 1).
38		Repeat of SCM panel No. 3.
39		Repeat of SCM panel No. 2.
40		Repeat of upper portion of SCM panel No. 5.
41		Repeat of SCM panel No. 6.
42	FDAI INDICATOR	Repeat of SCM FDAI (SCM Panel No. 4).
43		Repeat of lower portion of SCM panel No. 5.
44		Repeat of SCM panel No. 8
45		Repeat of SCM panel No. 7
46		Provides control of simulator operation, X-T recorders, initialization, and performance timer.
47	Console communication panel	Provides trainer communications.
48	SIMULATOR STATUS	Provides indication of simulator status.
49	ECS VALVE POSITION INDICATORS	Provides indications of ECS valve positions.
50		Repeat of SCM panels No. 10 and No. 11.
51	ECS VALVE POSITION INDICATORS	Repeat indicators of SCM ECS valve positions.
52		Repeat of SCM panel No. 12 (less MISSION ELAPSED TIMER and selector switch).
53		Repeat of SCM AGC up-data link controls (SCM panel No. 14).
54		Repeat of RCS INDICATORS selector switch (SCM Panel No. 12).
55		Repeat of upper portion of SCM panel No. 13.
56		Main display AGC DSKY repeater (SCM panel No. 14).
57		Repeat of SCM panel No. 15.
58		Repeat of lower portion of SCM panel No. 13.
59		Repeat of SCM panel No. 16
60		AMS emergency stop, SCM lighting, and IOS flood and indicator controls.
61	MALFUNCTION INSERTION	Keyboard used to control malfunction insertion.

Table 1-4. Instructor-Operator Station (Cont)

Panel	Nomenclature	Function
62	(Blank)	
63		Repeat of SCM panel No. 19.
64		Repeat of SCM panel No. 17 and upper portion of SCM panel No. 18.
65		Provides GMT and time-to/from launch time from central timing equipment.
66		Repeat of left portion of SCM panel No. 18.
67		Repeat of upper right portion of SCM panel No. 18.
68		Repeat of lower portion of SCM panel No. 18.
69		Repeat of communications portion of SCM panel No. 20.
70		Repeat of SPS portion of SCM panel No. 20.
71	Console communications panel	Provides trainer communication.
72		Provides control and status of right-hand circuit breaker panel (SCM panel No. 22).
73		Repeat of switches on SCM panel No. 22.
74		Repeat of SCM panel No. 23.
75		Repeat of switch positions on SCM panel No. 21.
76		IOS flood and indicator lighting controls.
77	MALFUNCTION STATUS	Dispaly of malfunction and indication of malfunction status.
78		Control and status of circuit breakers on SCM panel No. 21.
79	MALFUNCTION INSERTION	Keyboard to control malfunction insertion.
80	PERFORMANCE TIMER	Provide means for timing-to or from events.
81	COMPUTER STATUS	Indication of status of AMS computers.
82	VOICE PLAYBACK	Input plug and volume control for tape recorder playback unit.
83	KRS stact recorder	Voice recording equipment (trainer).
84		Electrical power outlet for tape recorder playback unit.
85		Lamp test.
86		Status indications of data recording equipment (trainer).
87	COMMUNICATIONS INTERFERENCE	Voice communication interference controls.
88		IOS flood and indicator lighting controls.
89	Console communication panel	Provides trainer communications.

1.3.1 MAIN DISPLAY PANEL (SCM-IOS).

Figures 1-12 through 1-37 and tables 1-5 through 1-30 illustrate the individual SCM panels of which the SCM main display panel is comprised and include the IOS panel area where status of each SCM panel is manifested. Numerical indexing of the figures correlates the figures with corresponding tables identifying each SCM control and display by name, explaining its function, and describing the manner of IOS manifestation. A single number code (per panel) is used for both the SCM and the IOS illustrations. Where a given SCM control or display does not have an IOS equivalent, the identifying number on the SCM panel illustration is indicated with a white numeral on a black circle. Where a control or display located on the IOS does not have an SCM counterpart, the identifying number on the IOS panel illustration is indicated by a white numeral on a black square.

1.3.1.1 Barometer Altimeter Panel.

Figure 1-12 illustrates the SCM equivalent of the barometer altimeter panel, S/C panel No. 1, and its associated IOS repeater panel. The controls and displays on this panel relate to the sequence control group system simulation.

Table 1-5 defines the function and instructor visibility to the status of each of the controls and displays.

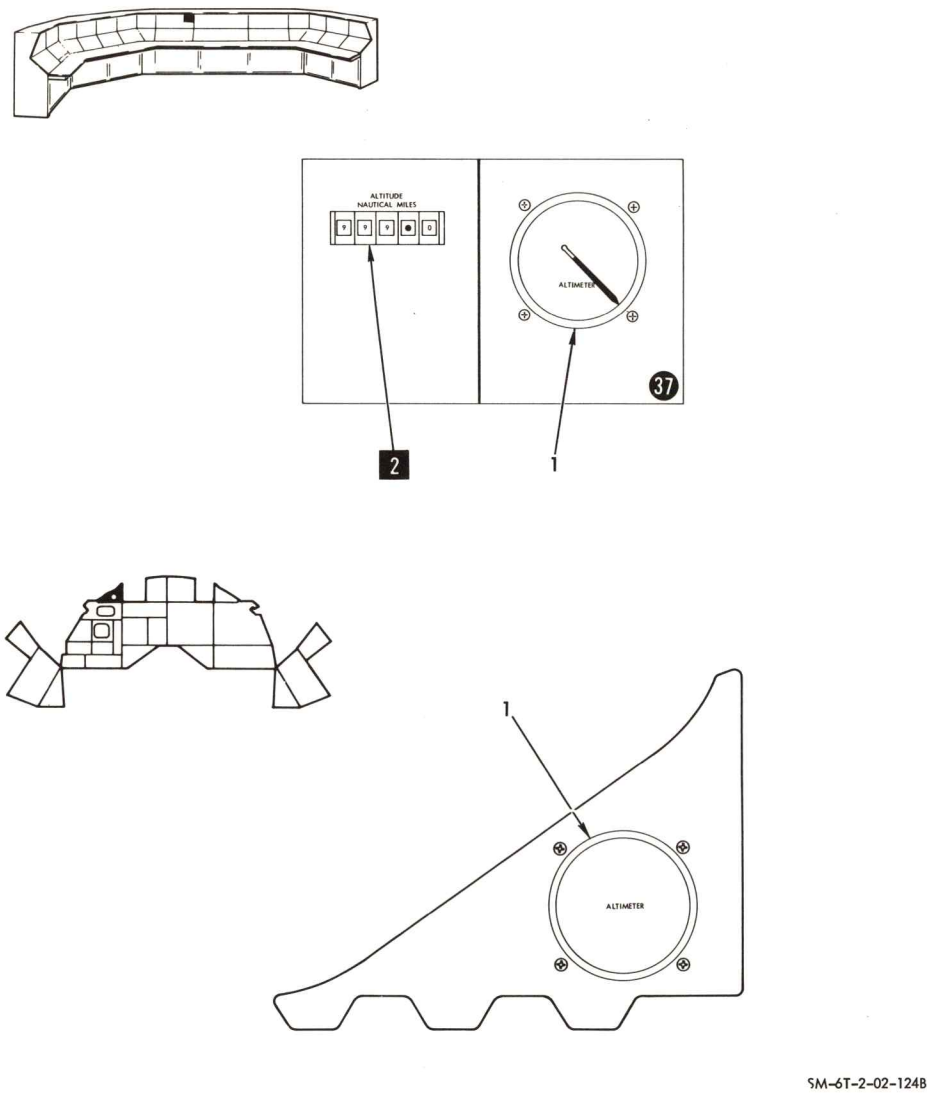

Figure 1-12. Barometric Altimeter Panel

Table 1-5. Barometric Altimeter Panel

Key	Nomenclature	Function	Instructor Visibility	Remarks
1	Barometric altimeter	Provides indication of vehicle altitude.	SCM repeater instrument	Meter range 0 to 100,000 feet. Markings for APEX COVER at 24,000 feet and main parachute deploy at 10,000 feet.
2	ALTITUDE NAUTICAL MILES digital altimeter (IOS only)	Provides four-digit readout of vehicle altitude.	Digital display (IOS only)	

1.3.1.2 S/C Panel No. 2.

Figure 1-13 illustrates the SCM equivalent to S/C panel No. 2 and its associated IOS repeater panel. The controls and displays on this panel are associated with the stabilization and control system, service propulsion system, and equations of motion simulation.

Table 1-6 defines the function and instructor visibility to the status of each of the controls and displays.

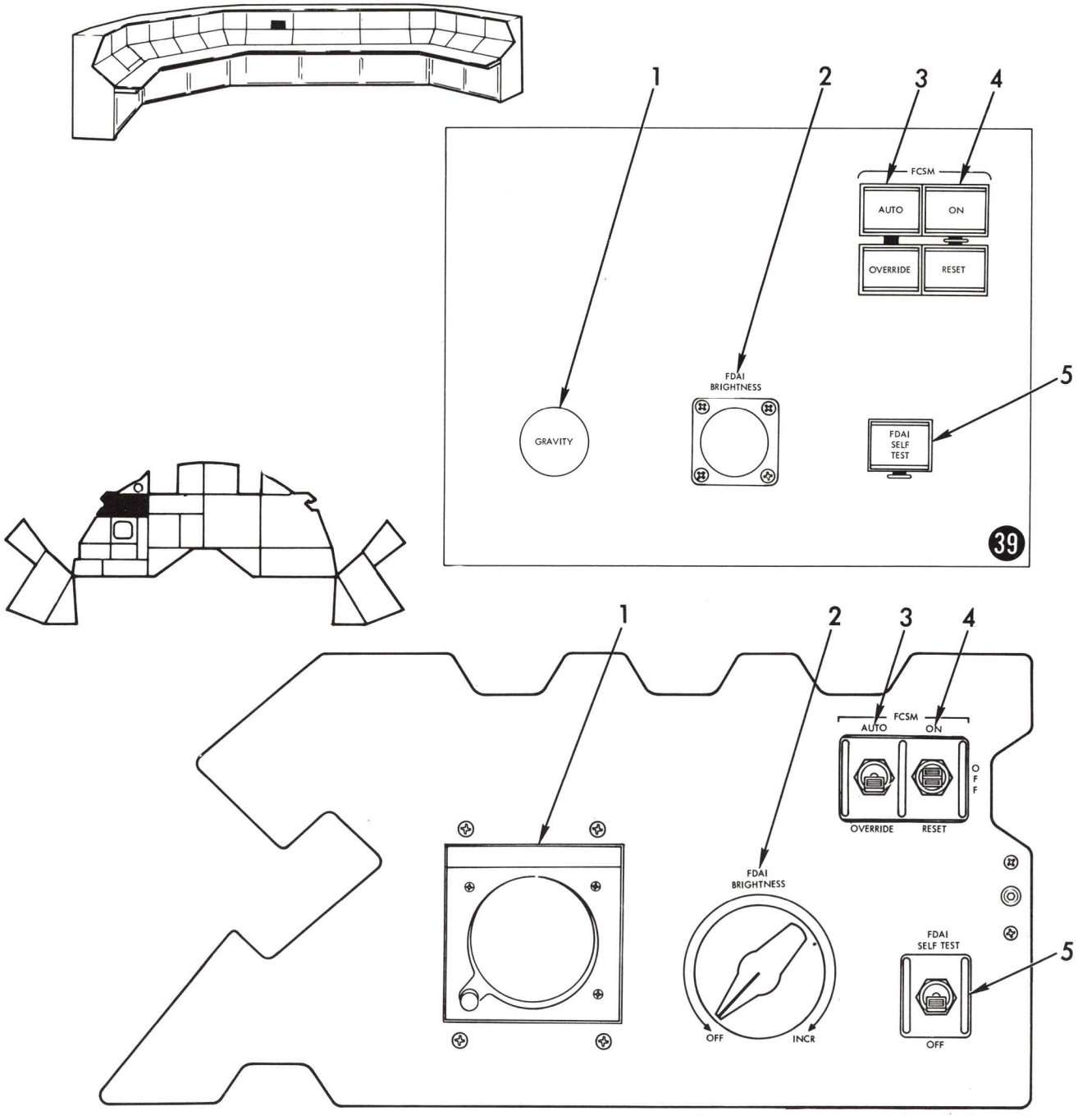

Figure 1-13. Spacecraft Panel No. 2

SM-6T-2-02-353

Table 1-6. S/C Panel No. 2

Key	Nomenclature	Function	Instructor Visibility	Remarks
1	g meter	Display S/C positive and negative g loads and records maximum g reading encountered.	Repeater indicator	Indicator has three pointers: one for normal g indications and two for recording maximum +g and -g readings. RESET knob enables manual reset of recording pointers to normal 1-g position.
2	FDAI BRIGHTNESS control			
	OFF-INCR	Controls FDAI panel lighting and THRUST ON lighting.	Repeater indicator	FDAI BRIGHTNESS control is used in conjunction with FDAI LTG sw on panel No. 25.
3	FCSM sw			
	AUTO	Enables automatic shutdown of SPS engine by FCSM if excessive engine vibration is sensed.	Repeater lt	
	OVERRIDE	Disables automatic shutdown capability of FCSM.	Repeater lt	
4	FCSM sw			
	ON	Applies power to FCSM system.	Repeater lt	
	OFF	Remove power from FCSM system.		
	RESET	Resets the FCSM system after receipt of excessive vibration signal, also extinguishes SPS ROUGH ECO light on panel No. 10.	Repeater lt	
5	FDAI sw			
	SELF TEST	Applies signal voltage of constant amplitude to torque motors within FDAI.	Repeater lt	When sw is held in SELF TEST position, rate indicators deflect from null position to negative pitch, roll, and yaw indication.
	OFF	Removes test signal from FDAI and permits normal operation.		

1.3.1.3 S/C Panel No. 3.

Figure 1-14 illustrates the SCM equivalent of S/C panel No. 3 and its associated IOS repeater panel. The controls and displays on this panel are associated with the sequence control group, the service propulsion system, and the caution and warning system simulation.

Table 1-7 defines the function and instructor visibility to the status of each of the controls and displays.

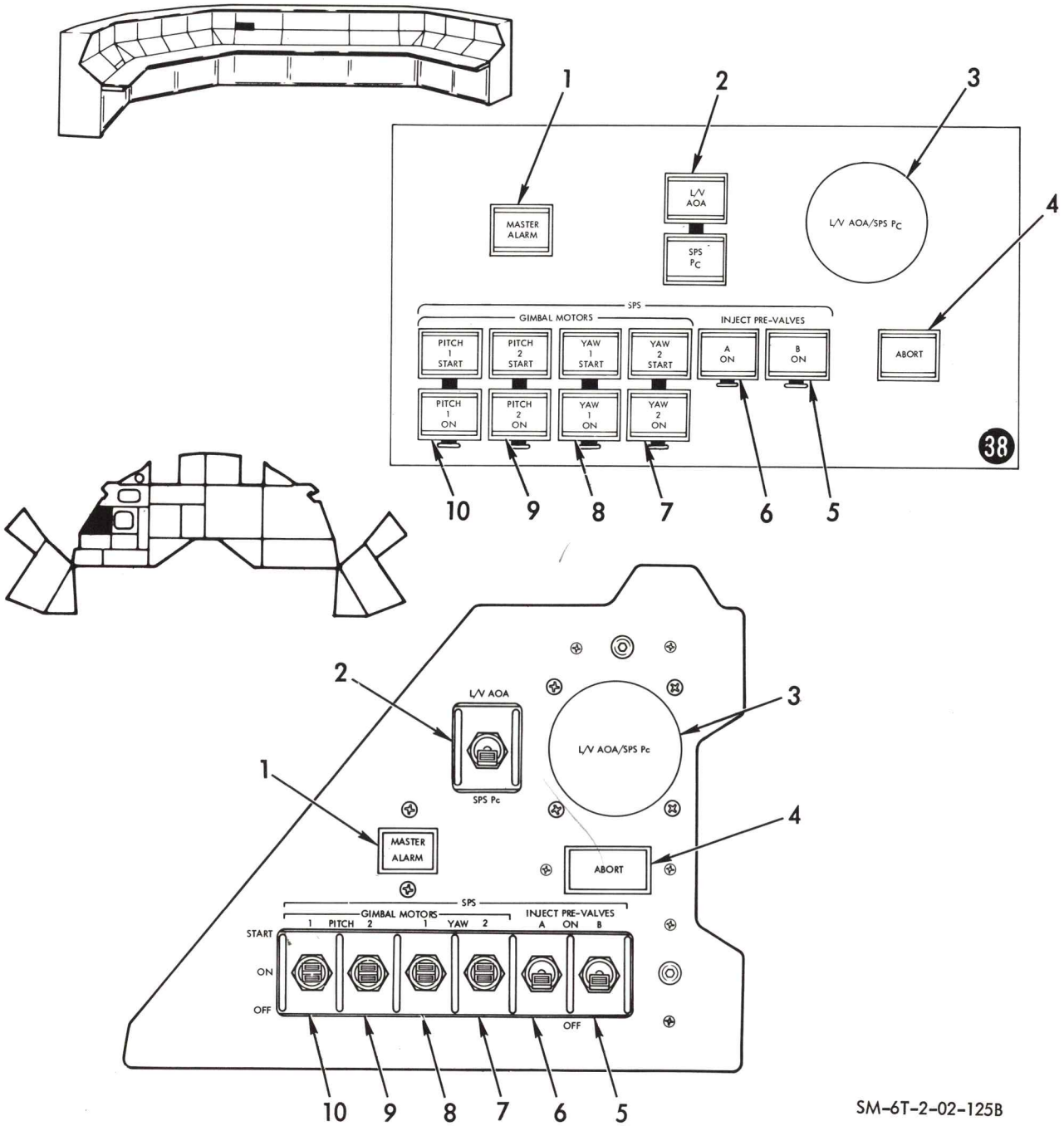

Figure 1-14. Spacecraft Panel No. 3

Table 1-7. S/C Panel No. 3

Key	Nomenclature	Function	Instructor Visibility	Remarks
1	MASTER ALARM sw-lt	Illumination of lt indicates malfunction or out-of-tolerance condition as indicated by illumination of applicable system status lt on panels No. 10 and/or No. 11.	Repeater lt	Illumination of lt is accompanied by audio tone in each headset. Depressing sw resets alarm circuitry extinguishing MASTER ALARM and MASTER WARNING lt and silences the audio tone.
2	L/V AOA - SPS Pc sw			
	L/V AOA	Connects output of Q-ball to L/V AOA/SPS Pc indicating L/V angle of attack.	Repeater lt	L/V AOA position used during boost phase of first stage.
	SPS Pc	Connects output of SPS engine combustion chamber pressure to L/V AOA/SPS Pc indicator.	Repeater lt	SPS Pc position used at L/V first stage separation.
3	L/V AOA/SPS Pc indicator	Time-shared indicator with input determined by position of L/V AOA-SPS Pc sw.	Repeater indicator	
4	ABORT lt	Illumination of lt indicates an abort has been requested by range safety officer ground control.	Repeater lt	Light is backup to voice communication from the ground.
5	SPS - INJECT PRE-VALVES sw			
	B			
	ON	Applies power to SPS engine propellant arming valve solenoid.	Repeater lt	
	OFF	Removes power from valve solenoid.		
	SPS - INJECT PRE-VALVES sw			
6	A			
	ON	Applies power to SPS engine propellant arming valve solenoid.	Repeater lt	
	OFF	Removes power from valve solenoid.		
	SPS - GIMBAL MOTORS sw			
7	YAW 2			
	START	Energizes motor sw which applies power to YAW 2 gimbal actuator motor.	Repeater lt	
	ON	Applies power to over-undercurrent sensing circuit.	Repeater lt	
	OFF	Energizes motor sw which removes power from YAW 2 gimbal actuator motor.		

Table 1-7. S/C Panel No. 3 (Cont)

Key	Nomenclature	Function	Instructor Visibility	Remarks
	SPS - GIMBAL MOTORS sw			
8	YAW 1			
	START	Energizes motor sw which applies power to YAW 1 gimbal actuator motor.	Repeater lt	
	ON	Applies power to over-undercurrent sensing circuit.	Repeater lt	
	OFF	Energizes motor sw which removes power from YAW 2 gimbal actuator motor.		
	SPS - GIMBAL MOTORS sw			
9	PITCH 2			
	START	Energizes motor sw which applies power to PITCH 2 gimbal actuator motor.	Repeater lt	
	ON	Applies power to over-undercurrent sensing circuit.	Repeater lt	
	OFF	Energizes motor sw which removes power from PITCH 2 gimbal actuator motor.		
	SPS - GIMBAL MOTORS sw			
10	PITCH 1			
	START	Energizes motor sw which applies power to PITCH 1 gimbal actuator motor.	Repeater lt	
	ON	Applies power to over-undercurrent sensing circuit.	Repeater lt	
	OFF	Energizes motor sw which removes power from PITCH 1 gimbal actuator motor.		

1.3.1.4 Flight Director Attitude Indicator.

Figure 1-15 illustrates the flight director attitude indicators (FDAI) at the SCM and its repeater at the IOS. The FDAI is associated with the stabilization and control system simulation.

Table 1-8 defines the function and instructor visibility to the positioning of the FDAI indicators.

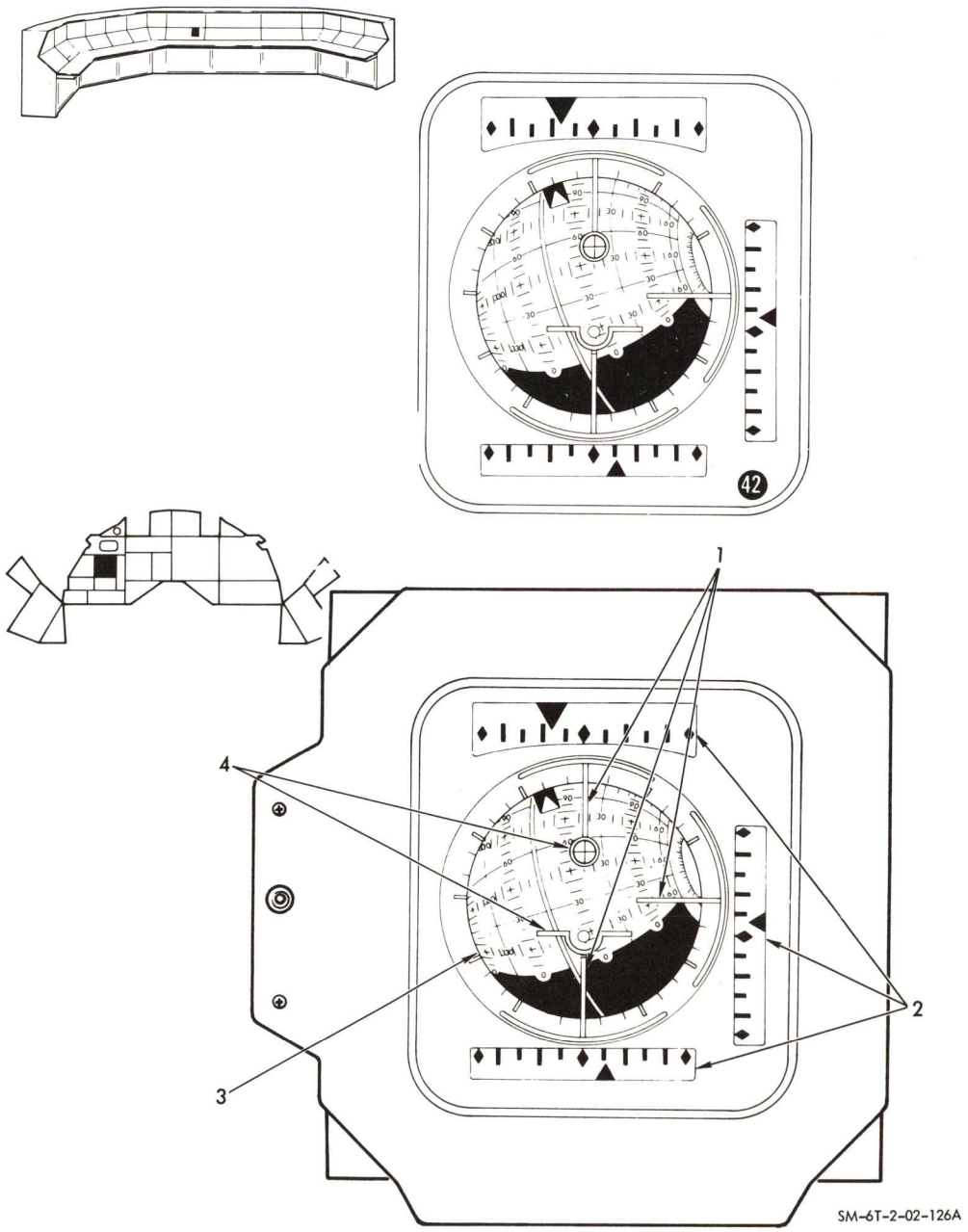

Figure 1-15. Flight Director Attitude Indicator Panel (Spacecraft Panel No. 4)

Table 1-8. Flight Director Attitude Indicator Panel (S/C Panel No. 4)

Key	Nomenclature	Function	Instructor Visibility	Remarks
1	Attitude error indicators	Displays pitch, roll, and yaw attitude errors due to drift or deviation from present attitude.	Repeater indicators	Attitude error is derived from CDUs in G&N modes and BMAGs in SCS modes.
2	Attitude rate indicators	Displays rate of change of attitude in pitch, roll, and yaw due to drift or deviation from present position.	Repeater indicators	Angular rates are generated by RGP or BMAGs in backup mode.
3	Attitude ball display	Displays S/C attitude referenced to inertial space in terms of body or navigation axes.	Repeater instrument	Ball face is marked in degrees of latitude and longitude: latitude indicates pitch attitude and longitude indicates yaw attitude. Gimbaling permits 360 degrees of freedom in roll, pitch, and yaw axes. Roll attitude is indicated by pointer referenced to scale marked in increments of 10 degrees about inner circumference of FDAI face.
4	Reference indices	Provide basis for attitude indications to either body or navigational axes.	Repeater indicator	Horizon level index represents body axes orientation with respect to IMU stable element. Cross-hair indices represent navigation axes displacement from IMU stable element. Two indices are displaced approximately 33 degrees in pitch axis.

1.3.1.5 S/C Panel No. 5.

Figure 1-16 illustrates the SCM equivalent of S/C panel No. 5 and its associated IOS repeater panel. The controls and displays on this panel are associated with the sequence control group and the booster propulsion system simulation.

Table 1-9 defines the function and instructor visibility to the status of each of the controls and displays.

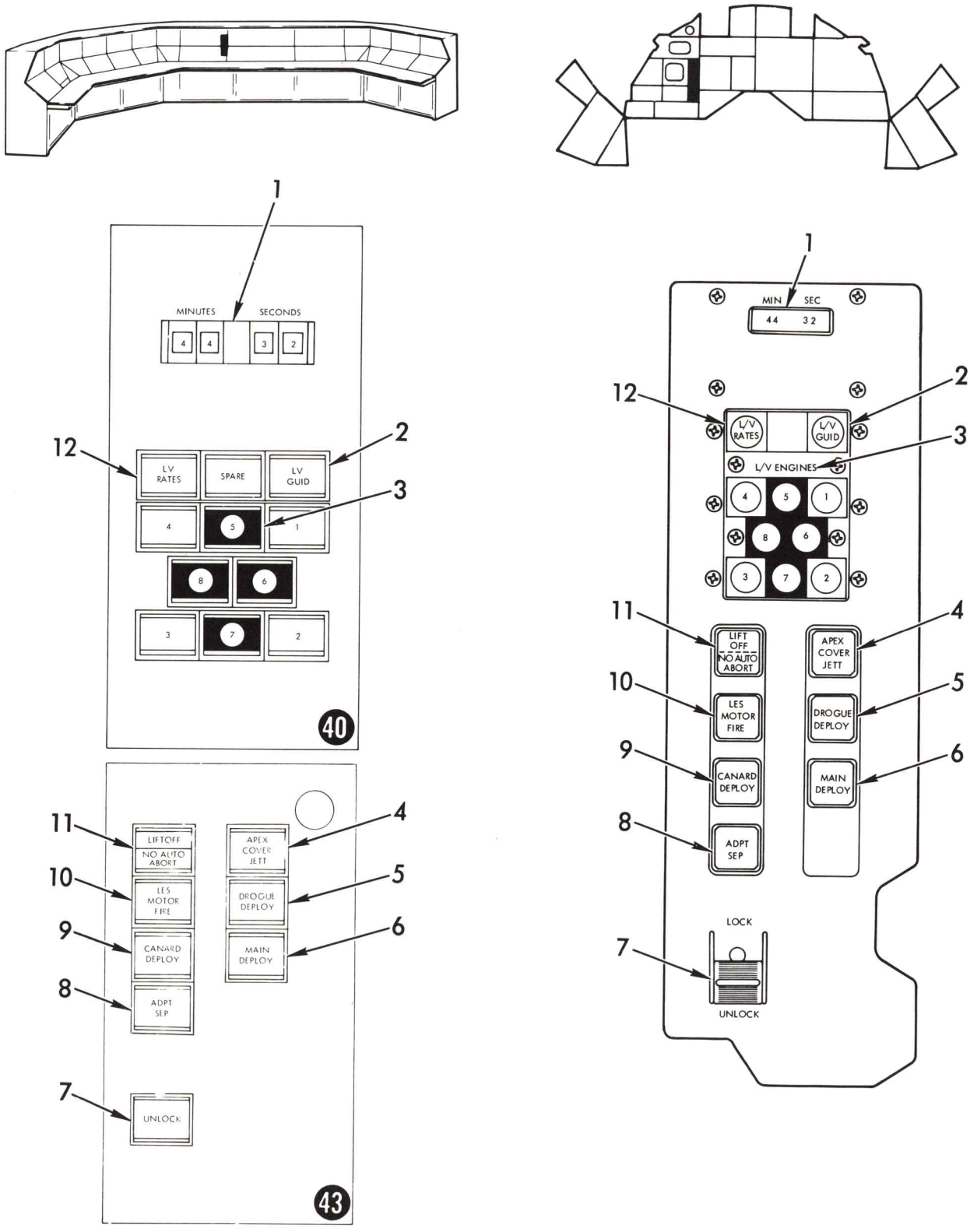

SM-6T-2-02-127B

Figure 1-16. Spacecraft Panel No. 5

Table 1-9. S/C Panel No. 5

Key	Nomenclature	Function	Instructor Visibility	Remarks
1	MIN SEC event timer display	Provides crew with means of monitoring and timing events.	Repeater display	Timer starts automatically when liftoff occurs; automatically reset to zero when an abort is initiated. Enables crew to time events manually when used in conjunction with timer controls on panel No. 8.
2	L/V GUID lt	Illumination indicates platform failure in L/V guidance system.	Repeater lt	
3	L/V ENGINE lt			
	1	Illumination indicates SIB No. 1 or SIVB engine operating below 90 percent of total thrust capability.	Repeater lt	Any two SIB engines below 90 percent of thrust will initiate an automatic abort in the automatic abort LES mode.
	2	Illumination indicates SIB No. 2 engine operating below 90 percent capability.	Repeater lt	
	3	Illumination indicates SIB No. 3 engine operating below 90 percent capability.	Repeater lt	
	4	Illumination indicates SIB No. 4 engine operating below 90 percent capability.	Repeater lt	
	5	Illumination indicates SIB No. 5 engine operating below 90 percent capability.	Repeater lt	
	6	Illumination indicates SIB No. 6 engine operating below 90 percent capability.	Repeater lt	
	7	Illumination indicates SIB No. 7 engine operating below 90 percent capability.	Repeater lt	
	8	Illumination indicates SIB No. 8 engine operating below 90 percent capability.	Repeater lt	
4	APEX COVER JETT sw	Manual backup to jettison the C/M apex cover.	Repeater lt	
5	DROGUE DEPLOY sw	Manual backup to deploy drogue parachutes.	Repeater lt	The drogue parachutes should deploy automatically at 24,000 feet + 2 seconds during descent.
6	MAIN DEPLOY sw	Manual backup to automatic main parachute deployment.	Repeater lt	Main parachute deployment should occur at 10,000 feet during descent.
7	LOCK-UNLOCK sw			
	LOCK	Locks the backup switches to prevent inadvertent operation.		
	UNLOCK	Unlocks and enables the backup switches to be depressed manually.	Repeater lt	

Table 1-9. S/C Panel No. 5 (Cont)

Key	Nomenclature	Function	Instructor Visibility	Remarks
8	ADPT SEP sw	Provide manual backup for adapter separation.	Repeater lt	
9	CANARD DEPLOY sw	Provides manual backup to deploy the canard when automatic deployment does not occur during an abort.	Repeater lt	The canard should automatically deploy 11 seconds after an abort.
10	LES MOTOR FIRE sw	Provides manual backup to fire the launch escape motor.	Repeater lt	Switch may be used to backup the LES TWR JETTISON functions.
11	LIFT OFF-NO AUTO ABORT sw-lt			
	LIFT-OFF lt	Illuminates at lift-off.	Repeater lt	Light goes out 5 seconds after lift-off.
	NO AUTO ABORT sw-lt	Illuminates at lift-off if EDS system has not been automatically enabled. Depressing sw-lt will enable the automatic abort function.	Repeater lt	If lt remains on after depressing sw-lt, EDS abort capability is disabled.
12	L/V RATES lt	Illumination indicates excessive launch vehicle angular rates in pitch, roll or yaw axes.	Repeater lt	Operates in conjunction with the EDS automatic abort system; when used in conjunction with FDAI and AOA, indicates necessity for manual abort.

1.3.1.6 Attitude Set/Gimbal Position Indicator Panel.

Figure 1-17 illustrates the SCM equivalent of the attitude set/gimbal position indicator panel, S/C panel No. 6, and its associated IOS repeater panel. The controls and displays on this panel are associated with the stabilization and control system simulation.

Table 1-10 defines the function and instructor visibility to the setting of each of the controls and displays.

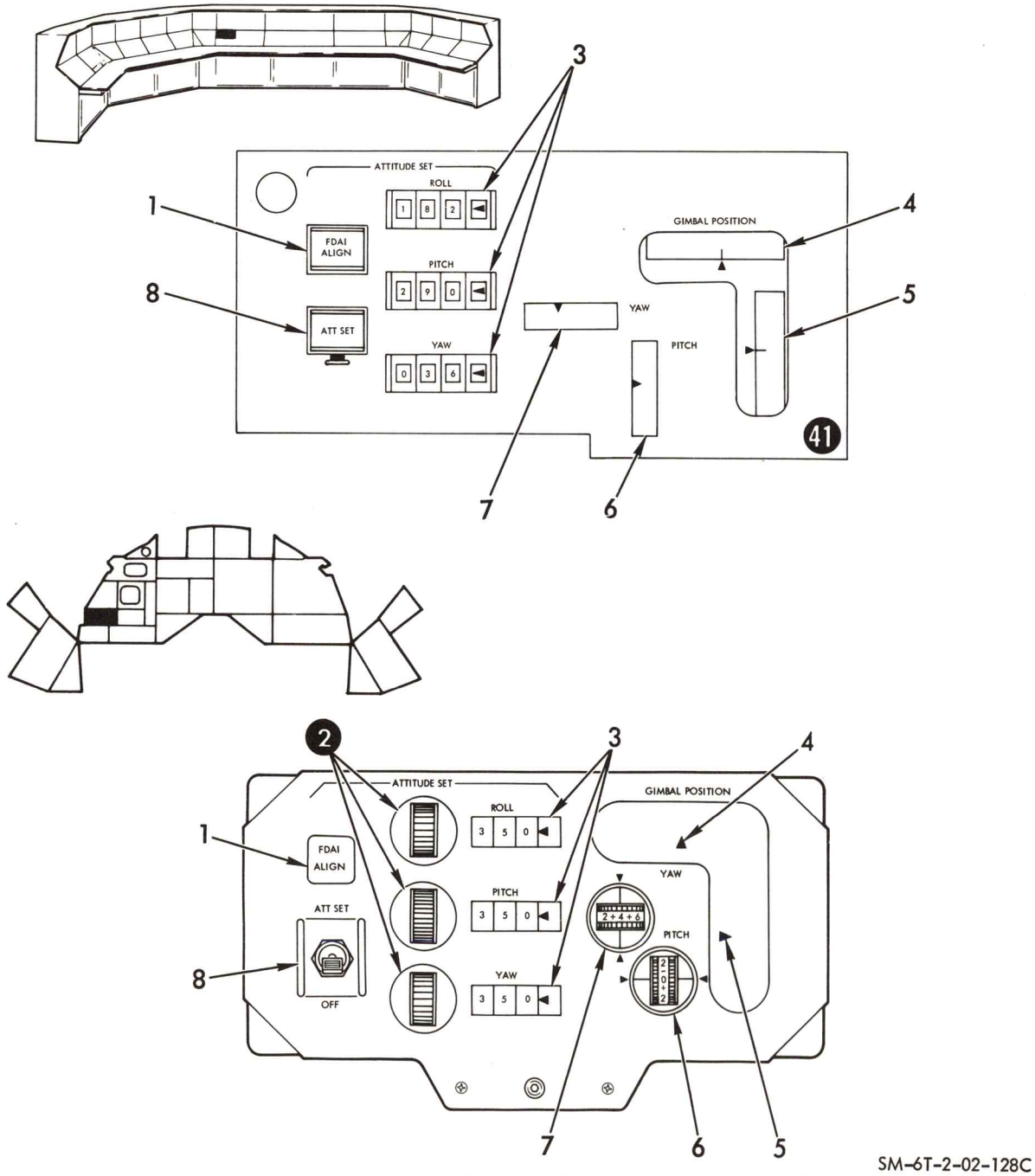

SM-6T-2-02-128C

Figure 1-17. Attitude Set/Gimbal Position Indicator Panel (Spacecraft Panel No. 6)

Table 1-10. Attitude Set/Gimbal Position Indicator Panel (S/C Panel No. 6)

Key	Nomenclature	Function	Instructor Visibility	Remarks
1	ATTITUDE SET - FDAI ALIGN sw	Enables alignment of attitude gyro coupling unit (AGCU) resolvers and FDAI to attitude displaced on ATTITUDE SET indicators.	Repeater lt	Momentary contact pushbutton sw must be held engaged until alignment is completed.
2	ATTITUDE SET thumbwheels	Enables desired pitch, roll, yaw angles to be set into SCS attitude reference system.	Variation in attitude indications	Thumbwheels are not located or indicated on IOS panel.
3	ATTITUDE SET display	Display roll, pitch, and yaw settings in degrees.	Repeater display	
	GIMBAL POSITION			
4	YAW indicator	Indicates SPS thrust chamber yaw position in degrees.	Repeater indicator	Utilized when aligning engine thrust vector with vehicle center of gravity.
5	PITCH indicator	Indicates SPS thrust chamber pitch position in degrees.	Repeater indicator	
6	PITCH thumbwheel	Provides manual control of pitch SPS engine gimbal position.	Repeater indicator	Utilized when aligning engine thrust vector with vehicle center of gravity. Null position is equivalent to 0° marking on thumbwheels.
7	YAW thumbwheel	Provides manual control of yaw SPS engine gimbal position.	Repeater indicator	Yaw gimbal null position is equivalent to + 4° marking on thumbwheel.
8	ATT SET sw			
	ATT SET	Locks attitude set verniers (pitch, yaw, roll); and, in SCS mode, connects AGCU difference outputs to attitude error needles.	Repeater lt	Attitude error needles (FDAI) now indicate difference between value set by thumbwheels and present S/C attitude in SCS modes. Switch has no function in G&N modes.
	OFF	Unlocks attitude set verniers; and, in SCS mode, connects BMAG outputs to attitude error needles.		

1.3.1.7 Delta V Panel.

Figure 1-18 illustrates the SCM equivalent of the delta V panel, S/C panel No. 7, and its associated IOS repeater panel. The controls and displays on this panel are associated with the stabilization and control system simulation.

Table 1-11 defines the function and instructor visibility to the status of each of the controls and displays.

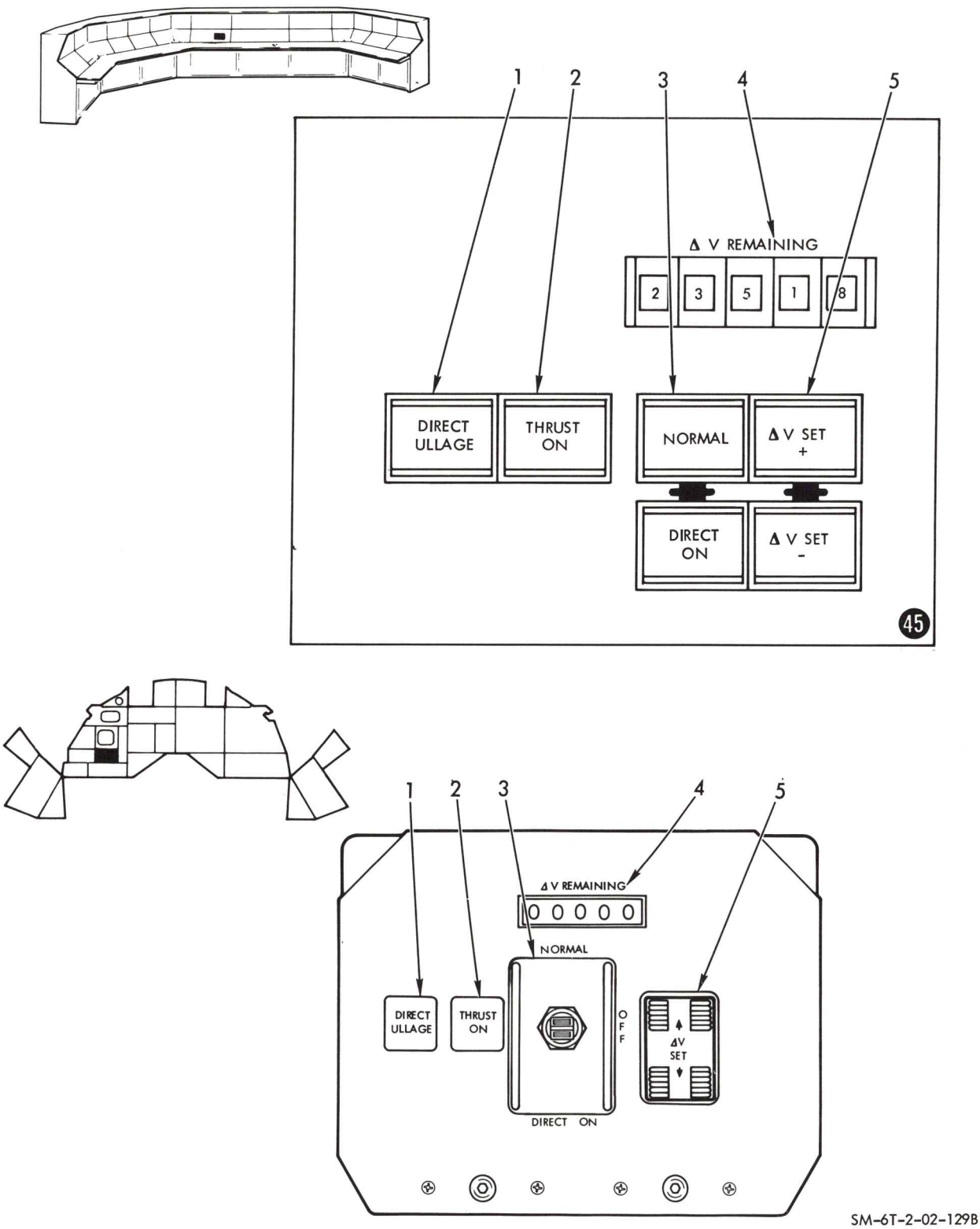

Figure 1-18. Delta V Panel (Spacecraft Panel No. 7)

Table 1-11. Delta V Panel (S/C Panel No. 7)

Key	Nomenclature	Function	Instructor Visibility	Remarks
1	DIRECT ULLAGE sw	When depressed, actuates all four +X S/C RCS engines.	Repeater lt	
2	THRUST ON sw-lt	When depressed, applies power to SCS circuitry which actuates SPS engine control circuit.	Repeater lt	Provides manual backup for SPS engine ignition when G&N ΔV mode is selected. Provides normal manual SPS ignition during SCS ΔV mode, sw-lt illuminates when engine ignition occurs.
3	NORMAL-OFF-DIRECT ON sw			
	NORMAL	Allows normal operation of SCS thrust logic for SPS engine firing.	Repeater lt	
	OFF	Removes power from engine injector solenoids directly resulting in thrust termination.		
	DIRECT ON	Provides capability of bypassing SCS circuitry and initiating engine firing directly.	Repeater lt	
4	ΔV REMAINING indicator	Displays delta V remaining and/or delta V magnitude in ft/sec.	Repeater indicator	When SPS is thrusting, the ΔV REMAINING indicator is driven toward zero by signals from SCS X-axis accelerometer.
5	ΔV sw			
	(+)	Enables increase of delta V remaining at slow or rapid rate.	Repeater lt	Five-position sw. Slow rate in either direction is two digits per second and fast rate is 64 digits per second in either direction with center-off position.
	(-)	Enables decrease of delta V remaining display at slow or rapid rate.	Repeater lt	

1.3.1.8 S/C Panel No. 8.

Figure 1-19 illustrates the SCM equivalent of S/C panel No. 8 and its associated IOS repeater panel. The controls on this panel are associated with the stabilization and control system, the sequence control group system, and the reaction control system simulation.

Table 1-12 defines the function and instructor visibility to the setting of each of the controls.

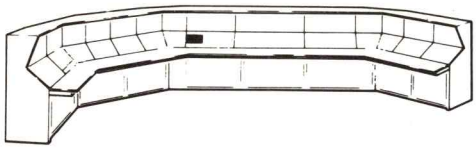

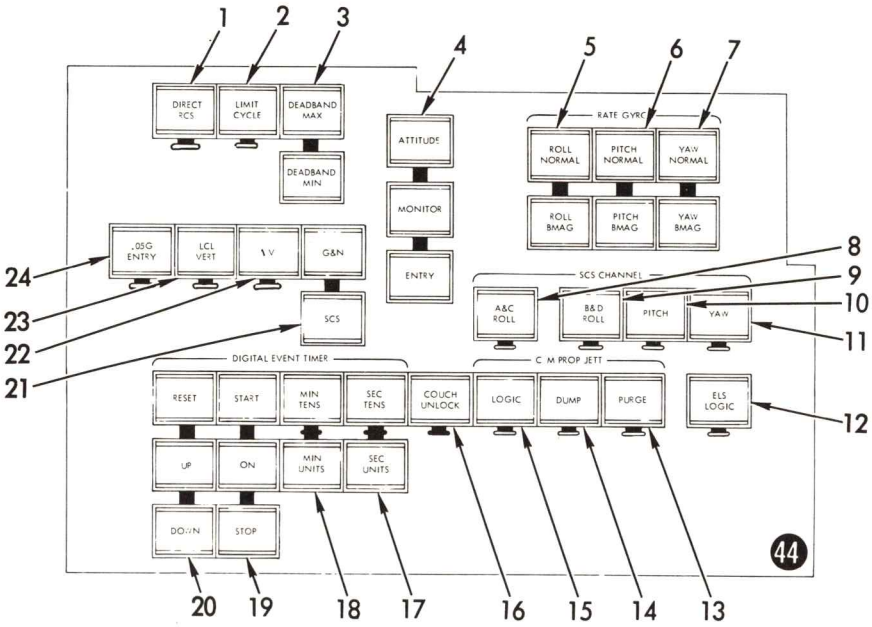

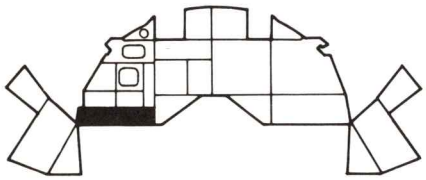

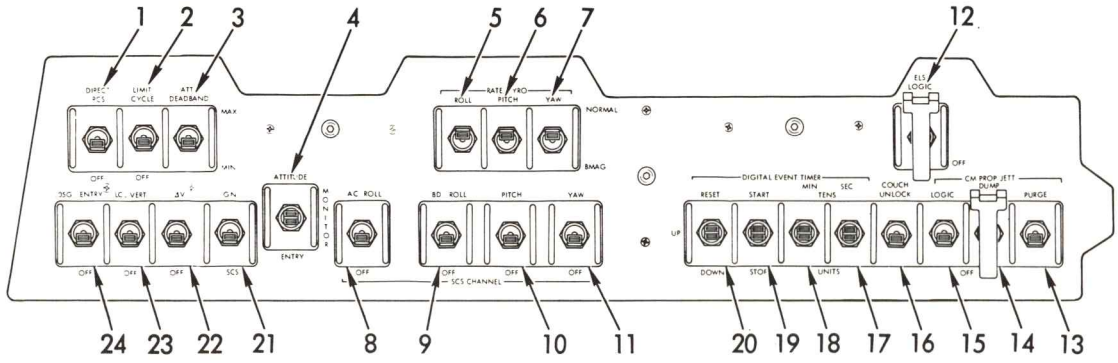

SM-6T-2-02-130B

Figure 1-19. Spacecraft Panel No. 8

Table 1-12. S/C Panel No. 8

Key	Nomenclature	Function	Instructor Visibility	Remarks
1	DIRECT mode sw			
	DIRECT RCS	Applies power to rotation controller enabling direct manual control of S/M or C/M RCS engines.	Repeater lt	Position bypasses all SCS electronics providing direct control of engines.
	OFF	Inhibits direct control of C/M or S/M RCS engines.		
2	LIMIT CYCLE sw			
	LIMIT CYCLE	Allows limit cycling of RCS engines during attitude control modes.	Repeater lt	
	OFF	Inhibits operation of SCS pseudo-rate circuit.		
3	ATT DEADBAND sw			
	MAX	Select deadband of ±5.0 degrees.	Repeater lt	Prevents attitude correction signals from being sent to RCS until attitude errors exceed selected deadband.
	MIN	Select deadband of ±0.5 degrees.	Repeater lt	
4	ATTITUDE/MONITOR/ ENTRY sw			
	ATTITUDE	Enables G&N or SCS attitude mode control.	Repeater lt	Switch is used in conjunction with G&N/SCS, ΔV and LCL VERT sw to enable selection of flight control modes.
	MONITOR	Enables monitor mode.	Repeater lt	
	ENTRY	Enables G&N or SCS entry mode.		
	RATE GYRO sw			
5	ROLL sw			Placing RATE GYRO sw to BMAG position removes BMAG attitude error signal to FDAI and applies a signal to gyro torque motors causing BMAG to function as rate gyro.
	NORMAL	Allows normal BMAG operation.	Repeater lt	
	BMAG	Enables BMAG rate mode of operation.	Repeater lt	
6	PITCH sw			
	NORMAL	Allows normal BMAG operation.	Repeater lt	
	BMAG	Enables BMAG rate mode of operation.	Repeater lt	
7	YAW sw			
	NORMAL	Allows normal BMAG operation.	Repeater lt	
	BMAG	Enables BMAG rate mode of operation.	Repeater lt	

Table 1-12. S/C Panel No. 8 (Cont)

Key	Nomenclature	Function	Instructor Visibility	Remarks
	SCS CHANNEL sw			
8	AC ROLL/OFF sw			
	AC ROLL	Applies power to normal A&C roll injector valve solenoids enabling normal RCS engine operation.	Repeater lt	
	OFF	Removes power from normal A&C roll injector valve solenoids inhibiting normal manual rotation control and automatic SCS control of RCS engines.		
9	BD ROLL/OFF sw			
	BD ROLL	Applies power to normal B&D roll injector valve solenoids enabling normal RCS engine operation.	Repeater lt	
	ROLL	Removes power from normal B&D roll injector valve solenoids inhibiting normal manual rotation control and automatic SCS control of RCS engines.		
10	PITCH/OFF sw			
	PITCH	Applies power to normal pitch injector valve solenoids enabling normal RCS engine operation.	Repeater lt	
	OFF	Removes power from normal pitch injector valve solenoids inhibiting normal manual rotation control and automatic SCS control of RCS engines.		
11	YAW/OFF sw			
	YAW	Applies power to normal yaw injector valve solenoids allowing normal RCS engine operation.	Repeater lt	
	OFF	Removes power from normal yaw injector valve solenoids inhibiting normal manual rotation control and automatic SCS control of RCS engines.		
12	ELS LOGIC sw			
	(Up)	Connects 28 vdc to ELS logic circuitry. Circuitry is powered automatically during LES abort.	Repeater lt	Switch is positioned up during entry or after SPS abort.
	(Off)	Disconnects 28 vdc from ELS logic circuitry.		

Table 1-12. S/C Panel No. 8 (Cont)

Key	Nomenclature	Function	Instructor Visibility	Remarks
	CM PROP JETT sw			
13	PURGE sw			
	(Up)	Activates C/M propellant purge system and ECS gas chromatograph helium dump operation.	Repeater lt	Switch positioned up after C/M propellant supply has been depleted in order to purge propellant tank lines. Switch only active if LOGIC and DUMP sw are in position.
	(Down)	Deactivates C/M propellant purge operation and ECS gas chromatograph helium dump operation.		
14	DUMP sw			
	(Up)	Activates C/M RCS fuel system dump/burn operation and 10 engine propellant injector valves.	Repeater lt	LOGIC sw must be placed in up position for dump/burn operation.
	(Off)	Deactivates C/M RCS fuel system dump/burn operation.		
15	LOGIC sw			
	(Up)	Applies power to RCS control box logic circuitry.	Repeater lt	Arms DUMP and PURGE sw.
	(Off)	Removes power from RCS control box logic circuitry.		
16	COUCH UNLOCK sw			
	UNLOCK	Unlocks crew couch attenuators.	Repeater lt	Attenuators are unlocked prior to earth landing.
	(Down)	Normal flight position.		
	DIGITAL EVENT TIMER sw			
17	SEC sw			
	TENS	Runs SEC indicating drums of event timer in tens.	Repeater lt	
	(Center)	No function.		
	UNITS	Runs second SEC indicating drum in units.	Repeater lt	
18	MIN sw			
	TENS	Runs MIN indicating drums in tens.	Repeater lt	
	(Center)	No function.		
	UNITS	Runs second MIN indicating drum in units.	Repeater lt	
19	START/STOP sw			
	START	Starts event timer	Repeater lt	Timer starts automatically at lift-off.
	(Center)	Normal operating position.	ON repeater lt	

Table 1-12. S/C Panel No. 8 (Cont)

Key	Nomenclature	Function	Instructor Visibility	Remarks
	STOP	Stops event timer.	Repeater lt	
20	RESET-UP-DOWN sw			
	RESET	Resets event timer to zero.	Repeater lt	Timer is automatically reset when abort is initiated.
	UP	Completed circuitry for event timer to time up.	Repeater lt	
	DOWN	Complete circuitry for event timer to time down.	Repeater lt	
21	G&N/SCS sw			
	G&N	Enables G&N control for attitude control, monitor, entry, or delta V control mode.	Repeater lt	Switch is used in conjunction with other flight control mode sw.
	SCS	Enables SCS control for attitude control, monitor, entry, or delta V control mode.	Repeater lt	
22	ΔV/OFF sw			
	ΔV	Applies signal to SCS enabling system for mode of operation, also enables manual thrust vector control.	Repeater lt	
	OFF	Inhibits delta V and manual thrust vector control modes and permits operation of SCS in other modes.		
23	LCL VERT/OFF sw			
	LCL VERT	Applies constant amplitude signal to AGCU torque motors.	Repeater lt	
	OFF	Allows normal BMAG operation.		
24	.05G ENTRY/OFF sw			
	.05G ENTRY	Inhibits C/M pitch and yaw attitude control channel in G&N entry mode; and pitch, yaw, and roll attitude control in SCS entry mode. Also couples roll rate signal to yaw channel.	Repeater lt	Power is only applied to sw when in either G&N or SCS entry mode.
	OFF	Allow normal attitude control operation.		

1.3.1.9 S/C Panel No. 10.

Figure 1-20 illustrates the SCM equivalent of S/C panel No. 10 and its associated IOS repeater panel. The displays are associated with the caution and warning system simulation.

Table 1-13 defines the function and instructor visibility to the status of each of the displays.

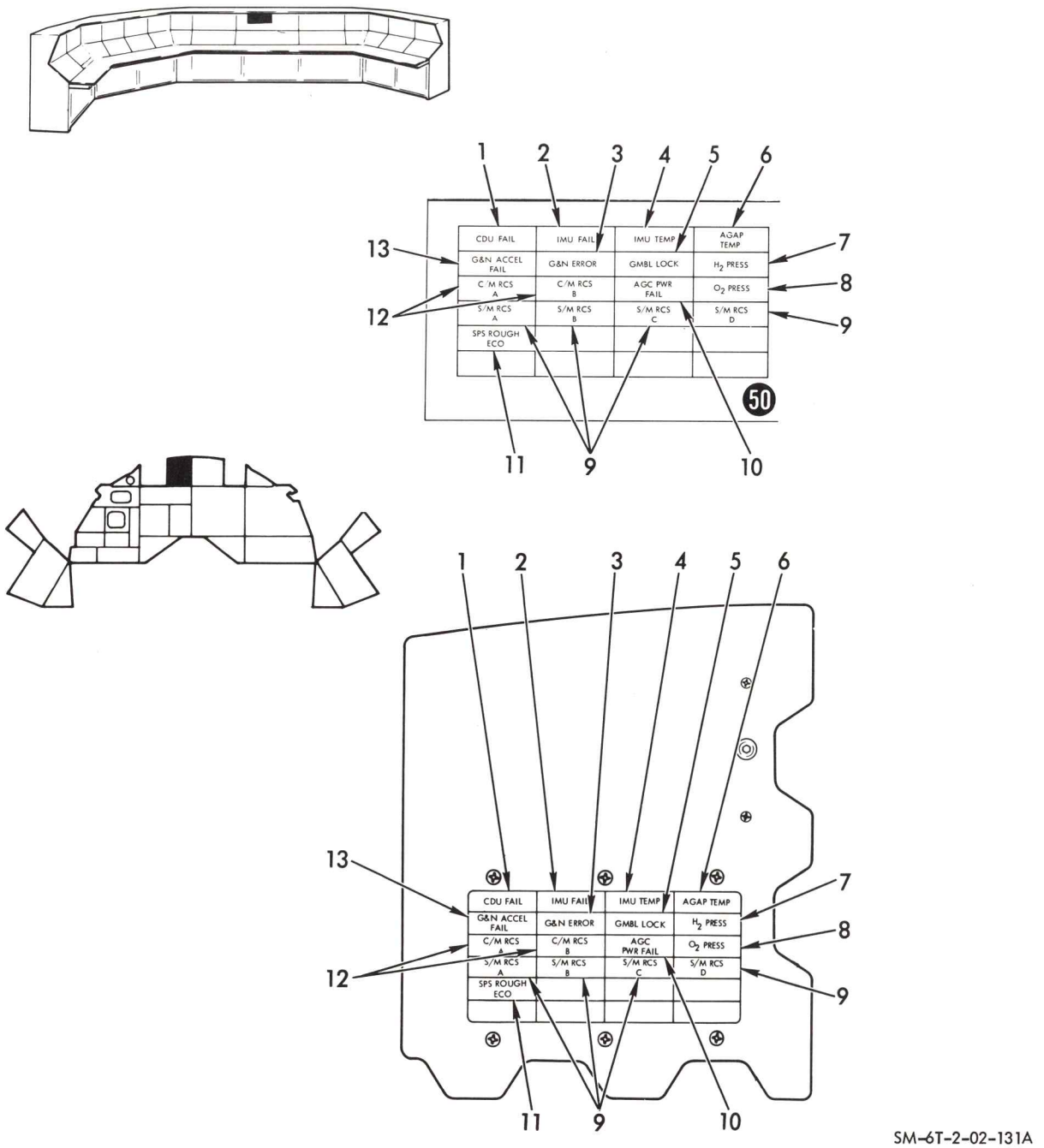

Figure 1-20. Spacecraft Panel No. 10

Table 1-13. S/C Panel No. 10

Key	Nomenclature	Function	Instructor Visibility	Remarks
1	CDU FAIL lt	Indicates loss of 25.6 kc power, CDU gimbal error failure, or loss of motor excitation in one or more coupling display units.	Repeater lt	Illumination of any of the warning lt simultaneously illuminates the MASTER ALARM and MASTER WARNING lt, and an audible tone is sent to each headset.
2	IMU FAIL lt	Indicates gimbal servo error failure, loss of 3200 cps power, gyro wheel power, resolver and tachometer excitation, or -28-volt d-c power within IMU.	Repeater lt	
3	G&N ERROR lt	Indicates failure in AGC, IMU, accelerometer loops, or CDU.	Repeater lt	
4	IMU TEMP lt	Indicates IMU temperature has deviated 5 degrees from normal.	Repeater lt	
5	GMBL LOCK lt	Indicates middle gimbal angle greater than ±60 degrees with respect to outer gimbal.	Repeater lt	
6	AGAP TEMP lt	Indicates attitude gyro accelerometer package (AGAP) temperature is less than 168°F or greater than 172°F.	Repeater lt	
7	H_2 PRESS lt	Indicates H_2 tanks 1 or 2 pressure is above 270 psia or below 220 psia.	Repeater lt	
8	O_2 PRESS lt	Indicates O_2 tanks 1 or 2 pressure is above 950 psia or below 800 psia.	Repeater lt	
9	S/M RCS A, B, C, D lt	Indicates S/M system has failed due to one of the following: a. Regulated helium manifold pressure over 215 psia or under 155 psia. b. Package temperature over 175°F or under 63°F. c. Propellant quantity ratio not within ±6.0 percent of 2:1 ratio.	Repeater lt	
10	AGC PWR FAIL lt	Indicates loss of -10-, -3-, or +28-volt d-c power in AGC.	Repeater lt	
11	SPS ROUGH ECO lt	Indicates excessive vibration sensed on SPS engine due to rough combustion during SPS engine firing.	Repeater lt	

Table 1-13. S/C Panel No. 10 (Cont)

Key	Nomenclature	Function	Instructor Visibility	Remarks
12	C/M RCS A, B lt	Indicates C/M system failure due to over or undernormal pressure of regulated helium manifold pressure prior to or after pressurization (below 265 psia or above 325 psia).	Repeater lt	
13	G&N ACCEL FAIL lt	Indicates 120-volt d-c power loss or accelerometer error failure in one or more accelerometers.	Repeater lt	

1.3.1.10 S/C Panel No. 11.

Figure 1-21 illustrates the SCM equivalent of S/C panel No. 11 and its associated IOS repeater panel. The controls and displays on this panel are associated with the caution and warning system simulation.

Table 1-14 defines the function and instructor visibility to the status of each of the controls and displays.

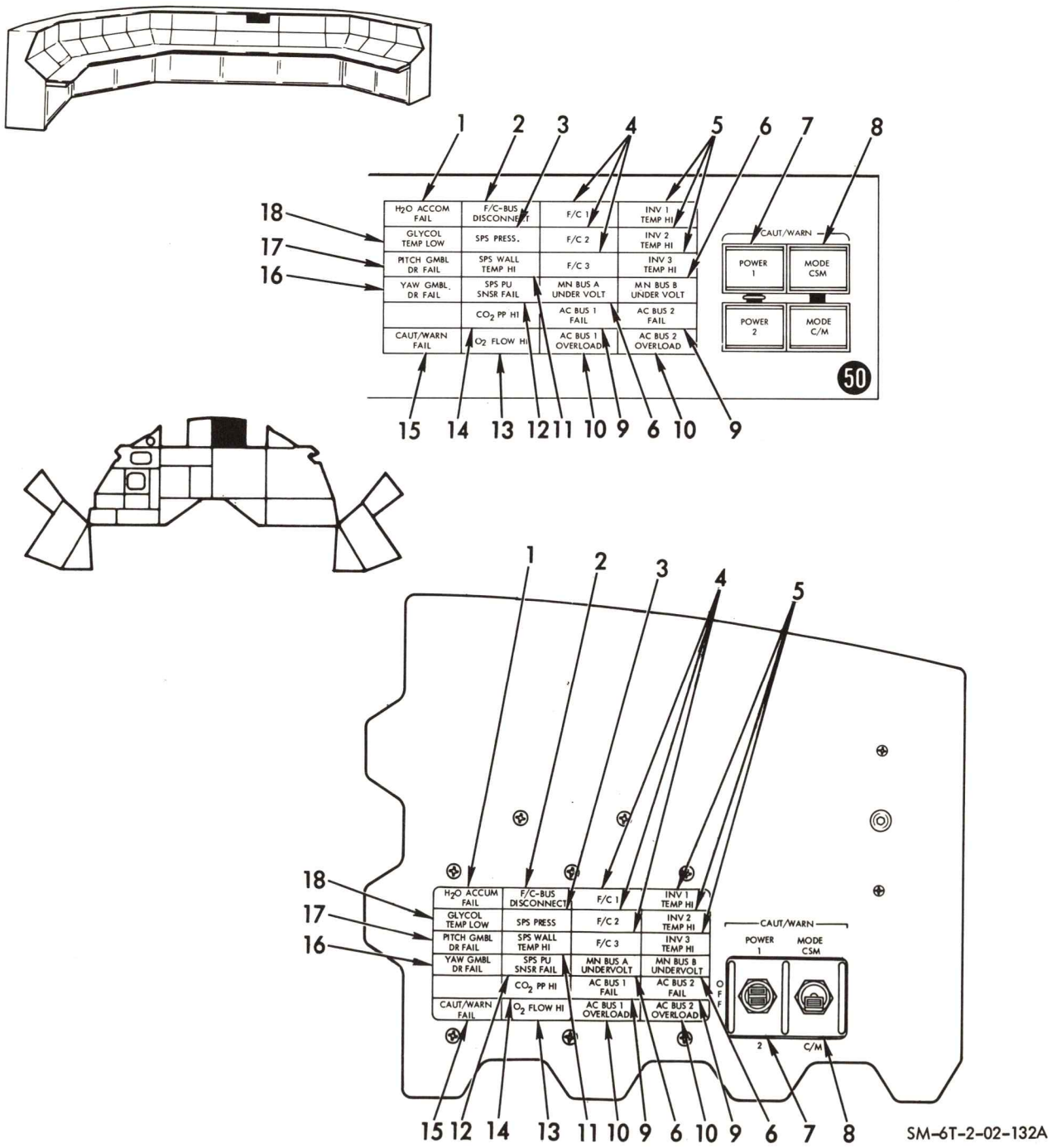

Figure 1-21. Spacecraft Panel No. 11

Table 1-14. S/C Panel No. 11

Key	Nomenclature	Function	Instructor Visibility	Remarks
1	H_2O ACCUM FAIL lt	Indicates detection of oxygen in water expelled from accumulator.	Repeater lt	
2	F/C BUS DISCONNECT lt	Indicates fuel cells 1, 2, or 3 has been disconnected from d-c main bus A or B due to fuel cell overload or reverse current sensing circuitry.	Repeater lt	
3	SPS PRESS lt	Indicates SPS propellant tank pressure is above 200 psia or below 160 psia.	Repeater lt	
4	F/C 1, F/C 2, F/C 3 lt	Indicates one of the following conditions exist in the respective fuel cell: a. O_2 flow rate below 0.284 lb/hr or greater than 1.304 lb/hr b. H_2 flow rate below 0.036 lb/hr or greater than 0.163 lb/hr c. F/C module skin temperature below 385°F or above 500°F d. A pH factor above 9 e. F/C inlet radiator temperature below -30°F f. F/C condenser exhaust temperature less than 155°F or above 170°F g. H_2 regulator output pressure greater than 75 psia h. O_2 regulator output pressure greater than 75 psia i. N_2 regulator output pressure greater than 70 psia.	Repeater lt	
5	INV 1, 2, 3, TEMP HI lt	Indicates a temperature of above +248°F exists in the respective inverter.	Repeater lt	
6	MN BUS A UNDERVOLT lt and MN BUS B UNDERVOLT lt	Indicates voltage on the respective d-c main bus drops below 26.25 volts.	Repeater lt	

Table 1-14. S/C Panel No. 11 (Cont)

Key	Nomenclature	Function	Instructor Visibility	Remarks
	CAUT/WARN			
7	POWER sw			
	1	Applies power to caution and warning system power supply No. 1.	Repeater lt	
	OFF	Removes power from both caution and warning system power supplies.		
	2	Applies power to caution and warning system power supply No. 2.	Repeater lt	
8	MODE sw			
	CSM	Applies power to S/M system status lights enabling both C/M and S/M lights.	Repeater lt	
	C/M	Removes power from S/M system status lights enabling C/M lights only.	Repeater lt	
9	AC BUS 1 and AC BUS 2 FAIL lt	Indicates the following conditions exist in any of the three phases of the respective a-c bus: a. Undervoltage (below 85 to 100 volts) b. Overvoltage (above 130 to 145 volts).	Repeater lt	
10	AC BUS 1 OVERLOAD lt and AC BUS 2 OVERLOAD lt	Indicates an overload exists on the respective a-c bus (250 to 300 percent rated current).	Repeater lt	Inverter supplying bus is automatically disconnected when overload is detected.
11	SPS WALL TEMP HI lt	Indicates SPS wall temperature has exceeded 485°F.	Repeater lt	
12	SPS PU SNSR FAIL lt	Indicates remaining SPS oxidizer-to-fuel ratio (by weight) exceeds 300 pounds or 90 percent of critical unbalance.	Repeater lt	
13	O_2 FLOW HI lt	Indicates ECS oxygen flow has exceeded 1.0 lb/hr.	Repeater lt	
14	CO_2 PP HI lt	Indicates CO_2 partial pressure has exceeded 5 mm Hg.	Repeater lt	
15	CAUT/WARN FAIL lt	Indicates caution and warning power supply failure.	Repeater lt	Audio alarm portion of alarm system inoperative due to failure.
16	YAW GMBL DR FAIL lt	Indicates an undercurrent or overcurrent condition has occurred in main yaw gimbal drive control.	Repeater lt	

Table 1-14. S/C Panel No. 11 (Cont)

Key	Nomenclature	Function	Instructor Visibility	Remarks
17	PITCH GMBL DR FAIL lt	Indicates an undercurrent or overcurrent condition has occurred in main pitch gimbal drive control.	Repeater lt	
18	GLYCOL TEMP LOW lt	Indicates water-glycol temperature from space radiator output decreases below -20°F.	Repeater lt	

1.3.1.11 S/C Panel No. 12.

Figure 1-22 illustrates the SCM equivalent of S/C panel No. 12 and its associated IOS repeater panels. All controls and displays with the exception of the mission elapsed timer are associated with the reaction control system simulation.

Table 1-15 defines the function and instructor visibility to the status of each of the controls and displays.

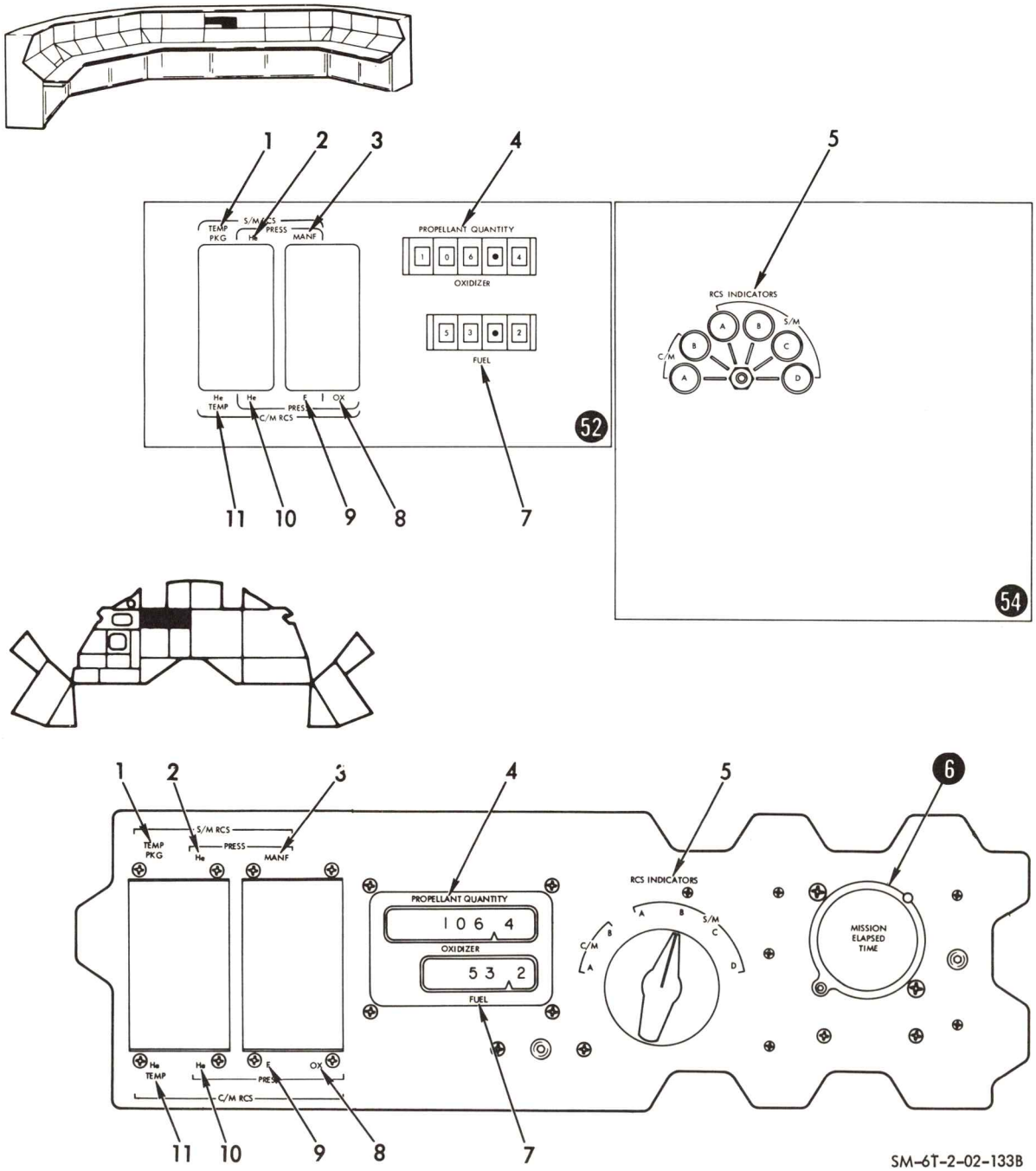

Figure 1-22. Spacecraft Panel No. 12

Table 1-15. S/C Panel No. 12

Key	Nomenclature	Function	Instructor Visibility	Remarks
1	S/M RCS - TEMP PKG indicator	Indicates temperature of S/M RCS package A, B, C, or D as selected by RCS INDICATORS sw.	Repeater indicator	
2	S/M RCS - PRESS - H_e indicator	Indicates helium tank pressure of S/M RCS package A, B, C, or D as selected by RCS INDICATORS sw	Repeater indicator	
3	S/M RCS - PRESS - MANF indicator	Indicates regulated helium manifold pressure of S/M RCS package A, B, C, or D as selected by RCS INDICATORS sw.	Repeater indicator	
4	PROPELLANT QUANTITY - OXIDIZER display	Displays digital readout of quantity remaining in oxidizer tank of S/M RCS package A, B, C, or D as selected by RCS INDICATORS sw.	Repeater display	Readouts indicate propellant quantity in pounds.
5	RCS INDICATORS sw	Connects inputs to propellant temperature, pressure and quantity indicating devices.	Repeater sw-lt	Position of SCM sw is indicated by lighted lamp. However, I/O may read other parameters than those selected by trainee by depressing any momentary pushbutton light. The SCM indicator light remains on but the IOS selected parameter is displayed to the I/O. SCM displays are not affected.
	C/M - A and B S/M - A, B, C, and D	C/M and S/M section are identical within their respective systems.		
6	MISSION ELAPSED TIME clock	Displays mission elapsed time in 10-hour increments up to 400 hours.	(C/M only)	Indicator has two set-knobs: one starts, stops, and resets the clock; the other sets the hour and minute hands.
7	PROPELLANT QUANTITY-FUEL display	Displays digital readout of quantities remaining in fuel tank of S/M RCS package A, B, C, or D as selected by RCS INDICATORS sw.	Repeater display	Readouts indicate propellant quantity in pounds.
8	C/M RCS - PRESS - OX indicator	Indicates regulated helium pressure prior to entering the oxidizer tank of the C/M RCS system A or B as selected by the RCS INDICATORS sw.	Repeater indicator	Indicators zero when RCS INDICATORS sw is in any S/M position.
9	C/M RCS - PRESS - F indicator	Indicates regulated helium pressure prior to entering fuel tank of C/M RCS system A or B as selected by RCS INDICATORS sw.	Repeater indicator	
10	C/M RCS - PRESS - H_e indicator	Indicates helium tank pressure of C/M RCS system A or B as selected by RCS INDICATORS sw.	Repeater indicator	
11	C/M RCS - TEMP - H_e indicator	Indicates helium tank temperature of C/M RCS system A or B as selected by RCS INDICATORS sw.	Repeater indicator	

1.3.1.12 S/C Panel No. 13

Figure 1-23 illustrates the SCM equivalent of S/C panel No. 13 and its associated IOS repeater panels. The controls and displays on this panel are associated with the communications and instrumentation, electrical power system, environmental control system, and caution and warning system simulation.

Table 1-16 defines the function and instructor visibility to the status of each of the controls and displays.

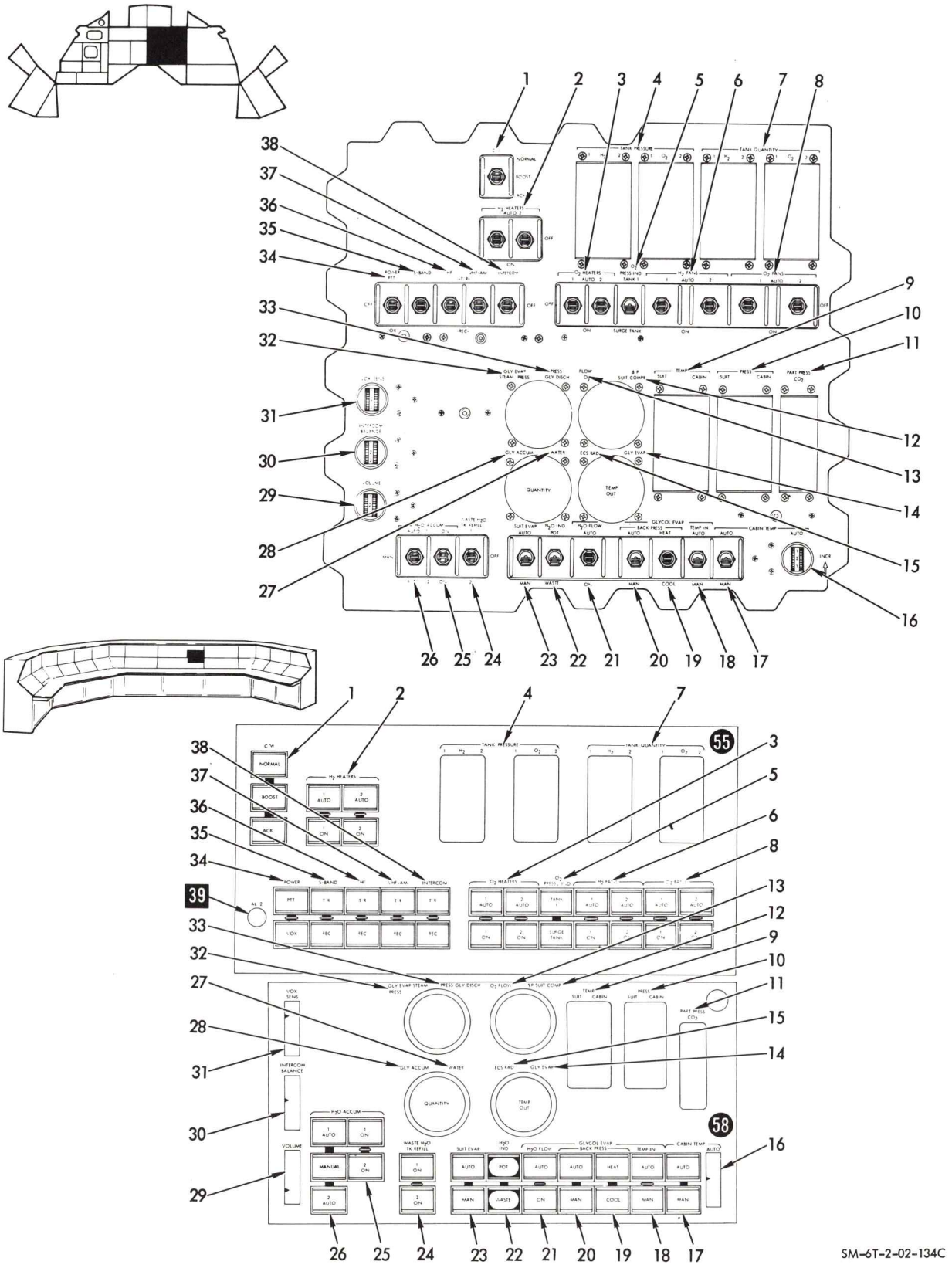

Figure 1-23. Spacecraft Panel No. 13

Table 1-16. S/C Panel No. 13

Key	Nomenclature	Function	Instructor Visibility	Remarks
1	C/W sw			
	NORMAL	Provides power to the system status lt to enable direct illumination of the lt upon receipt of malfunction signals.	Repeater lt	NORMAL position to be used at all times other than boost phase or when dark adaptation is required.
	BOOST	Disconnects power from the MASTER ALARM lt on S/C panel No. 3 preventing illumination of lt upon receipt of malfunction signal.	Repeater lt	BOOST position used during ascent phase to preclude possibility of confusion between ABORT lt and MASTER ALARM lt.
	ACK	Places the MASTER ALARM sw function into system status circuitry preventing direct illumination of the status lt upon receipt of malfunction signals.	Repeater lt	ACK position used to retain dark adaptation. With sw in ACK position, receipt of malfunction signal will illuminate the MASTER ALARM and MASTER WARNING lt and initiate audio alarm. To determine malfunction, MASTER ALARM sw-lt is depressed to illuminate the appropriate system status light. Light will remain ON as long as sw-lt is held depressed; although, upon release, malfunction may be recalled by depressing MASTER ALARM sw-lt or placing sw to NORMAL.
2	H_2 HEATERS sw			
	Sw 1			
	AUTO	Enables automatic pressure sw to control power to H2 tank 1 heater elements.	Repeater lt	
	OFF	Removes power from H_2 tank 1 heater elements.		
	ON	Applies power directly to H_2 tank 1 heater element.	Repeater lt	
	Sw 2			
	AUTO	Enables automatic pressure sw to control power to H_2 tank 2 heater elements.	Repeater lt	
	OFF	Removes power from H_2 tank 2 heater elements.		
	ON	Applies power directly to H_2 tank 2 heater elements.	Repeater lt	
3	O_2 HEATER sw			
	Sw 1			
	AUTO	Enables automatic pressure sw to control power to O_2 tank 1 heater elements.	Repeater lt	

Table 1-16. S/C Panel No. 13 (Cont)

Key	Nomenclature	Function	Instructor Visibility	Remarks
	OFF	Removes power from O_2 tank 1 heater elements.		
	ON	Applies power directly to O_2 tank 1 heater elements.	Repeater lt	
	Sw 2			
	AUTO	Enables automatic pressure sw to control O_2 tank 2 heater elements.	Repeater lt	
	OFF	Removes power from O_2 tank 2 heater elements.		
	ON	Applies power directly to O_2 tank 2 heater elements.	Repeater lt	
4	TANK PRESSURE indicators			
	H_2 - 1	Displays pressure of H_2 tank 1.	Repeater indicator	
	H_2 - 2	Displays pressure of H_2 tank 2.	Repeater indicator	
	O_2 - 1	Displays pressure of O_2 tank 1.	Repeater indicator	
	O_2 - 2	Displays pressure of O_2 tank 2.	Repeater indicator	
5	O_2 PRESS IND sw			
	TANK 1	Connects output of O_2 tank 1 pressure transducer to O_2 TANK 1 PRESSURE indicator	Repeater lt	
	SURGE TANK	Connects output of ECS surge tank pressure transducer to O_2 tank TANK 1 PRESSURE indicator.	Repeater lt	
6	H_2 FANS sw			
	Sw 1 AUTO	Enables automatic pressure sw to control power to fan motor in H_2 tank 1.	Repeater lt	
	OFF	Removes power from H_2 tank 1 fan motors.		
	ON	Applies power directly to H_2 tank 1 fan motors.	Repeater lt	

Table 1-16. S/C Panel No. 13 (Cont)

Key	Nomenclature	Function	Instructor Visibility	Remarks
	Sw 2			
	AUTO	Enables automatic pressure sw to control power to circulating fan motors of H_2 tank 2.	Repeater lt	
	OFF	Removes power from H_2 tank 2 fan motors.		
	ON	Applies power directly to H_2 tank 2 fan motors.	Repeater lt	
7	TANK QUANTITY indicators			
	H_2 - 1	Displays quantity of H_2 remaining in tank 1.	Repeater indicator	
	H_2 - 2	Displays quantity of H_2 remaining in tank 2.	Repeater indicator	
	O_2 - 1	Displays quantity of O_2 remaining in tank 1.	Repeater indicator	
	O_2 - 2	Displays quantity of O_2 remaining in tank 2.	Repeater indicator	
8	O_2 FANS sw			
	Sw 1			
	AUTO	Enables automatic pressure sw to control power to O_2 tank 1 fan motors.	Repeater lt	
	OFF	Remove power from O_2 tank 1 fan motors.		
	ON	Applies power directly to O_2 tank 1 fan motors.	Repeater lt	
	Sw 2			
	AUTO	Enables automatic pressure sw to control power to O_2 tank 2 fan motors.	Repeater lt	
	OFF	Removes power from O_2 tank 2 fan motors.		
	ON	Applies power directly to O_2 tank 2 fan motors.	Repeater lt	
9	TEMP indicators			
	SUIT	Provides temperature readout of suit supply manifold atmosphere.	Repeater indicator	Normal operating range 45° to 55°F.

Table 1-16. S/C Panel No. 13 (Cont)

Key	Nomenclature	Function	Instructor Visibility	Remarks
	CABIN	Provides average temperature readout of cabin atmosphere.	Repeater indicator	Normal operating range 50° to 70°F during prelaunch and 70° to 80°F in flight.
10	PRESS indicators			
	SUIT	Provides pressure readout of suit circuit atmosphere at demand regulator sensing port.	Repeater indicator	Normal operation ranges are 14.6 psia during prelaunch, 4.7 to 5.3 psia in normal flight, and 3.75±0.25 psia during emergency space flight.
	CABIN	Provides pressure readout of cabin atmosphere.	Repeater indicator	Normal operating ranges are 14.7 psia during prelaunch, 5.0±0.2 psia during normal flight, and 0.0 psia during emergency space flight.
11	PART PRESS CO_2 indicator	Provides partial pressure readout of CO_2 in suit circuit atmosphere.	Repeater indicator	Normal operating range indications are 0.0 to 7.6 mm Hg during prelaunch and in flight. Emergency readings range from 7.6 to 15.0 mm Hg.
12	ΔP SUIT COMP indicator	Provides pressure differential readout between suit compressor inlet and outlet manifolds.	Repeater indicator	Normal operating range indications are 0.56 psi during prelaunch and 0.35 to 0.38 psia in flight.
13	FLOW O_2 indicator	Provides total rate-of-flow reading of oxygen supplied to ECS with exception of PLSS SUPPLY VALVE.	Repeater indicator	Normal O_2 flow range from 0.20 to 0.45 lb/hr during prelaunch and in flight.
14	GLY EVAP - TEMP OUT indicator	Provides temperature readout of water-glycol at outlet of water-glycol evaporator.	Repeater indicator	Normal operating range indications are 40° to 50°F during prelaunch and 45±3°F in flight.
15	ECS RAD - TEMP OUT indicator	Provides temperature readout of water-glycol returned to C/M from S/M space radiator.	Repeater indicator	
16	CABIN TEMP - AUTO thumbwheel	Permits manual adjustment of cabin temperature automatic control unit.	Repeater indicator	
17	CABIN TEMP sw			
	AUTO	Maintains cabin temperature automatically to setting of CABIN TEMP thumbwheels.	Repeater lt	
	MAN	Permits manual control of cabin temperature using CABIN TEMP thumbwheels.	Repeater lt	
18	GLYCOL EVAP - TEMP IN sw			
	AUTO	Applies a-c power to water-glycol temperature control unit to automatically regulate mixing of hot and cold water-glycol.	Repeater lt	

Table 1-16. S/C Panel No. 13 (Cont)

Key	Nomenclature	Function	Instructor Visibility	Remarks
	MAN	Provides manual backup operation of water-glycol evaporator temperature control valve using universal T-handle tool.	Repeater lt	
	GLYCOL EVAP - BACK PRESS sw			
19	HEAT/COOL sw			
	HEAT	Closes back-pressure valve to decrease water evaporation rate.	Repeater lt	Switch is only functional when BACK PRESS - AUTO/MAN sw is in MAN position.
	(Off)	Remove power from back-pressure valve.		
	COOL	Opens back-pressure valve to increase water evaporation rate.	Repeater lt	
20	AUTO/MAN sw			
	AUTO	Removes power from GLYCOL EVAP - BACK PRESS - HEAT/COOL sw; applies power to back-pressure control unit; automatically regulates back pressure in steam duct.	Repeater lt	
	MAN	Provides manual operation of back-pressure control valve actuator.	Repeater lt	
21	GLYCOL EVAP - H_2O FLOW sw			
	AUTO	Applies power to wetness control unit; automatically regulates water inflow to water-glycol evaporator.	Repeater lt	
	(Off)	Removes power from wetness control and water control valve.		
	ON	Provides manual backup for operating water control valve.	Repeater lt	
22	H_2O IND sw			
	POT	Selects potable water tank quantity signal for display on WATER QUANTITY meter.	Repeater sw-lt	Instructor may monitor readings other than that selected by trainee by depressing momentary sw-lt.
	WASTE	Selects waste tank quantity signal for display on WATER QUANTITY meter.	Repeater sw-lt	

Table 1-16. S/C Panel No. 13 (Cont)

Key	Nomenclature	Function	Instructor Visibility	Remarks
23	SUIT EVAP sw			
	AUTO	Automatically regulates water inflow to suit evaporator when cooling by water-glycol is inadequate.	Repeater lt	
	MAN	Permits manual control of water inflow control valve by use of universal T-handle tool.	Repeater lt	
24	WASTE H_2O TK REFILL sw			
	1	Applies power to solenoid valve of S/M water tank 1 permitting water flow to refill C/M water tanks.	Repeater lt	
	OFF	Removes power from solenoid valves.		
	2	Applies power to solenoid valve of S/M water tank 2 permitting water flow to refill C/M water tanks.	Repeater lt	
	H_2O ACCUM sw			
25	ON 1/OFF/ON 2 sw			
	ON 1	Manual backup control for No. 1 cyclic accumulator valve permitting oxygen flow directly to accumulator.	Repeater lt	
	OFF	Removes power from cyclic accumulator solenoid valves.		
	ON 2	Manual backup control for No. 2 cyclic accumulator valve permitting oxygen flow directly to accumulator.	Repeater lt	
26	AUTO 1/MAN/AUTO 2 sw			
	AUTO 1	Applies power to No. 1 cyclic accumulator control unit to automatically time and actuate accumulator valve for 10 seconds every 10 minutes.	Repeater lt	
	MAN	Provides manual control of No. 1 or No. 2 cyclic accumulator valves.	Repeater lt	

Table 1-16. S/C Panel No. 13 (Cont)

Key	Nomenclature	Function	Instructor Visibility	Remarks
	AUTO 2	Applies power to No. 2 cyclic accumulator control unit to automatically time and actuate accumulator valve for 10 seconds every 10 minutes.	Repeater lt	
27	WATER - QUANTITY indicator	Provides readout of waste or potable water quantity as selected by H_2O IND sw.	Repeater indicator	
28	GLY ACCUM - QUANTITY indicator	Provides readout of water-glycol coolant in accumulator.	Repeater indicator	
29	VOLUME thumbwheel control	Increases or decreases audio signal level to earphones.	Repeater indicator	
30	INTERCOM BALANCE thumbwheel control	Adjusts level of intercom signals in relation to incoming RF signals.	Repeater indicator	
31	VOX SENS thumbwheel control	Adjusts the sensitivity of the voice-operated relay in the audio center module.	Repeater indicator	
32	GLY EVAP STEAM PRESS indicator	Provides a readout of steam pressure discharged from water-glycol evaporator.	Repeater indicator	
33	PRESS GLY DISCH indicator	Provides a static readout of water-glycol pump discharge pressure.	Repeater indicator	
34	POWER sw			
	PTT	Applies power to audio center module.	Repeater lt	VOX is disabled.
	OFF	Removes power from audio center module.		VOX is disabled.
	VOX	Applies power to audio center module and enables VOX circuitry.	Repeater lt	Depressing PTT pushbutton overrides VOX control circuitry.
35	S-BAND sw			
	T/R	Enables astronaut 2 to transmit and receive over S-band equipment when operating in voice mode.	Repeater lt	
	OFF	Removes the audio input from the S-band section of the audio center.		

Table 1-16. S/C Panel No. 13 (Cont)

Key	Nomenclature	Function	Instructor Visibility	Remarks
	REC	Enables the astronaut 2 to receive only from the S-band equipment when operating in the voice mode.	Repeater lt	
36	HF sw			
	T/R	Enables astronaut 2 to transmit and receive over the HF transceiver when operating in the AM or SSB mode.	Repeater lt	
	OFF	Removes power from the HF channel of the audio center.		
	REC	Enables astronaut 2 to receiver only over HF transceiver.	Repeater lt	
37	VHF-AM sw			
	T/R	Enables astronaut 2 to transmit and receive over VHF-AM transmitter-receiver.	Repeater lt	
	OFF	Removes power from VHF-AM channel of audio center.		
	REC	Enables astronaut 2 to receive only over VHF-AM transmitter-receiver.	Repeater lt	
38	INTERCOM sw			
	T/R	Enables astronaut 2 to transmit and receive over the intercom system.	Repeater lt	
	OFF	Removes audio center from intercom system.		
	REC	Enables astronaut 2 to receive only over intercom system.	Repeater lt	
39	AL 2 lt (IOS only)	Illumination indicates that astronaut loop 2 is in use.		Operates in conjunction with console communications system AL talk-listen keys.

1.3.1.13 AGC Display and Keyboard.

Figure 1-24 illustrates the SCM equivalent of S/C panel No. 14, the AGC display and keyboard, and its associated IOS repeater panels. The controls and displays on this panel are associated with the guidance and navigation system simulation.

Table 1-17 defines the function and instructor visibility to the status of each of the controls and displays.

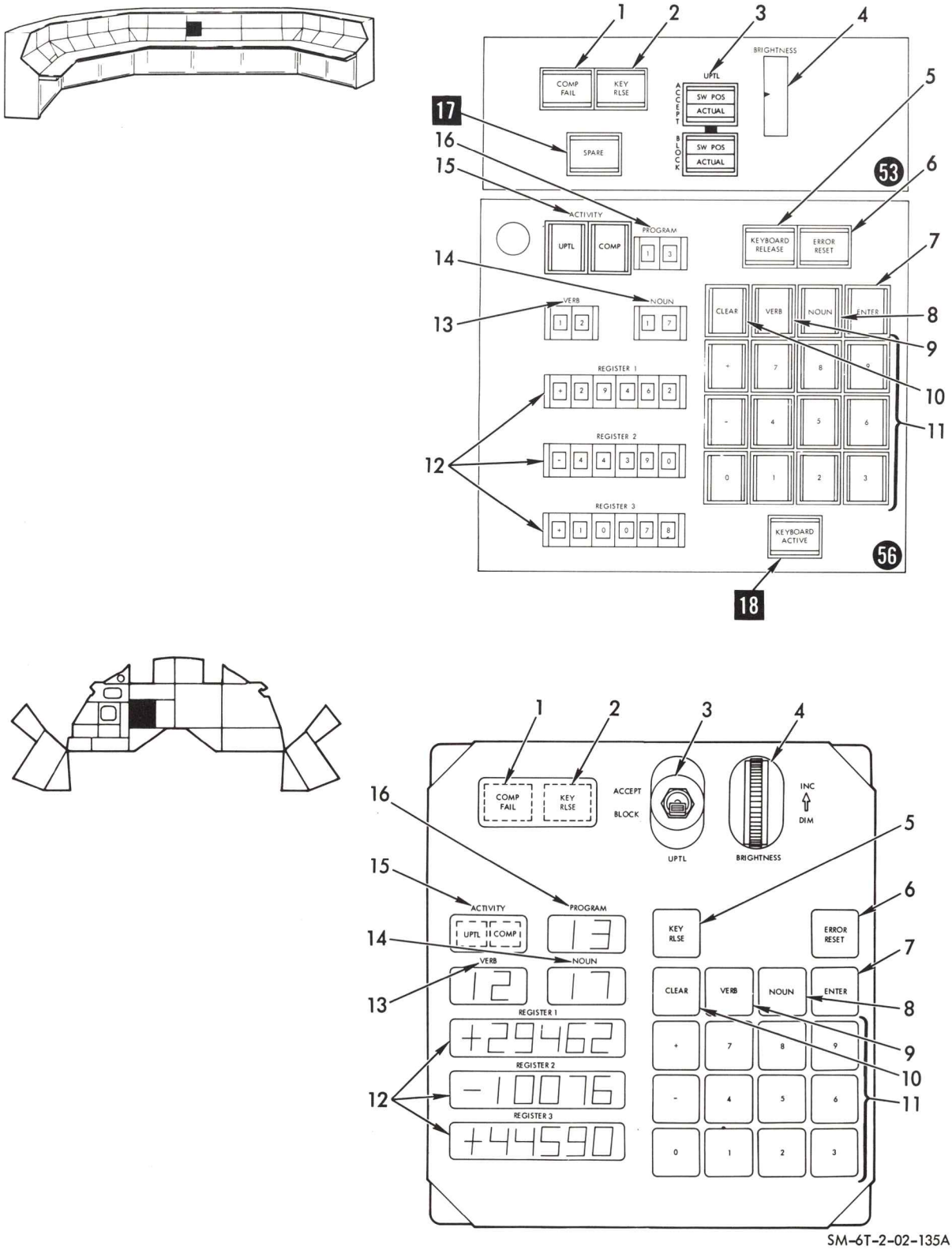

Figure 1-24. AGC Display and Keyboard Panel (Spacecraft Panel No. 14)

Table 1-17. AGC Display and Keyboard Panel (S/C Panel No. 14)

Key	Nomenclature	Function	Instructor Visibility	Remarks
1	COMP FAIL lt	When on, indicates AGC has failed.	Repeater lt	
2	KEY RLSE lt	Indicates that internal computer program has attempted to use verb-noun subroutine and has found keyboard and display busy.	Repeater lt	
3	UPTL sw			Upper half of these two indicators repeats SCM UPTL sw position. Lower halves are actuated under program control and indicate functional status of AMS with respect to block up-link function.
	ACCEPT	Allows AGC to accept data received on up-link.	Repeater lt	
	BLOCK	Prohibits AGC from accepting up-link information.	Repeater lt	
4	BRIGHTNESS thumbwheel control	Controls AGC DSKY lt intensity.	Repeater indicator	
5	KEY RLSE pushbutton (P/B)	Releases registers 1, 2, and 3 from displaying keyboard data and allows display of program data.	Repeater lt	In event that keyboard is failed or AGC is off, keyboard repeats will still be present at IOS but KEYBOARD ACTIVE light will not be on. (Also applies to 6, 7, 8, 9, 10, and 11.)
6	ERROR RESET P/B	Causes lighted computer alarm display to go out.	Repeater lt	
7	ENTER P/B	Causes data or noun/verb command to be entered in computer.	Repeater lt	
8	NOUN P/B	Prepares computer to accept noun code.	Repeater lt	
9	VERB P/B	Prepares computer to accept verb code.	Repeater lt	
10	CLEAR P/B	Allows erasure of erroneous number keyed during data loading.	Repeater lt	
11	0 through 9 P/B	Places in computer, binary equivalent of octal or decimal digits shown.	Repeater lt	
12	REGISTER display	Display selected source data or component of multicomponent data.	Repeater lt	In event of simulated electroluminescent lamp failure, IOS repeaters will continue to display commanded AGC characters.
13	VERB display	Indicates two-digit display indicating characters of verb code selected.	Repeater display	Same as 12.

Table 1-17. AGC Display and Keyboard Panel (S/C Panel No. 14) (Cont)

Key	Nomenclature	Function	Instructor Visibility	Remarks
14	NOUN display	Indicates two-digit display indicating characters of noun code selected.	Repeater display	Same as 12.
15	ACTIVITY lt	Indicates activity in which computer is presently engaged.		
	UPTL	Indicates computer is receiving up-telemetry data.	UPTL repeater lt	
	COMP	Indicates computer is engaged in computation.	Repeater lt	
16	PROGRAM display	Indicates number (decimal) of program presently in progress.	Repeater	Same as 12.
17	Spare			
18	KEYBOARD ACTIVE (IOS only)	Indicates that keyboard entry is in progress, imminent, or required.		Cues I/O that keyboard entries are being made or are expected.

1.3.1.14 S/C Panel No. 15.

Figure 1-25 illustrates the SCM equivalent of S/C panel No. 15 and its associated IOS repeater panel. The controls and displays on this panel are associated with the reaction control system simulation.

Table 1-18 defines the function and instructor visibility to the status of each of the controls and displays.

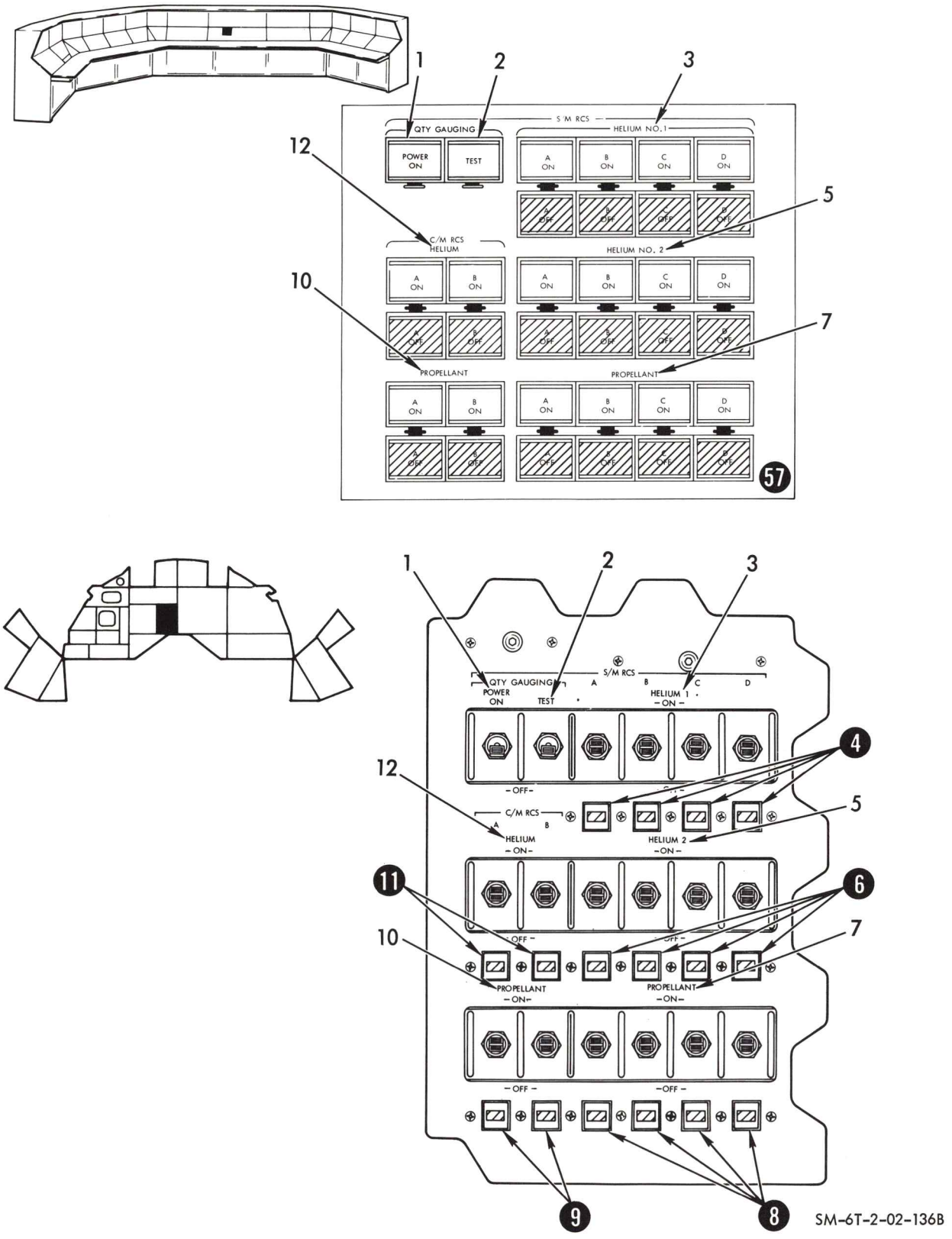

Figure 1-25. Reaction Control System Panel (Spacecraft Panel No. 15)

Table 1-18. Reaction Control System Panel (S/C Panel No. 15)

Key	Nomenclature	Function	Instructor Visibility	Remarks
1	QTY GAUGING-POWER sw			
	ON	Applies power to propellant quantity gaging system.	Repeater lt	
	OFF	Removes power from propellant quantity gaging system.		
2	QTY GAUGING - TEST sw			
	TEST	Resets quantity sensing circuitry.	Repeater lt	
	OFF	Starts test mode.		
3	S/M RCS - HELIUM No. 1 sw	Four identical sw each controlling two helium isolation valves for one side of parallel pressurization system.		
	A (B, C, D)			
	ON	Actuates helium isolation valves to open position.	Repeater lt	
	(Center)	Removes solenoid actuation power.		
	OFF	Actuates helium isolation valve to closed position.	Repeater lt	
4	Event indicator flags (C/M only)	Indicates position of He 1 valves.	Reduced or increased intensity of related IOS sw-repeater lt	Striped-line display indicates closed condition of valve. Monitored at IOS by reduced intensity of repeater OFF lt.
5	S/M RCS HELIUM NO. 2 (A, B, C, D) sw	Function identical to He 1 sw for 2 path.	Repeater lt	
6	Event indicator flags (C/M only)	Indicates position of He 2 valves.	Reduced or increased intensity of related IOS sw-repeater lt	Same as 4.
7	PROPELLANT sw	Four identical sw: each controlling two shutoff valves (fuel, oxidizer).		
	A (B, C, D)			
	ON	Actuates propellant shutoff valves in respective system to open position.	Repeater lt	
	(Center)	Removes solenoid excitation power.		
	OFF	Actuates propellant shutoff valves in respective systems to closed position.	Repeater lt	

Table 1-18. Reaction Control System Panel (S/C Panel No. 15) (Cont)

Key	Nomenclature	Function	Instructor Visibility	Remarks
8	Event indicator flags (C/M only)	Indicates position of propellant shutoff valves.	Repeater lt	Same as 4.
9	Event indicator flags (C/M only)	Indicates position of propellant shutoff valves.	Repeater lt	Same as 4.
10	PROPELLANT sw	Two functionally identical sw: each controlling two propellant shutoff valves in respective systems.		
	ON	Opens two propellant shutoff valves in respective system.	Repeater lt	
	(Center)	Removes actuation power.		
	OFF	Closes two propellant shutoff valves in respective system.	Repeater lt	
11	Event indicator flags (C/M only)	Indicates position of He isolation valve.	Repeater lt	Same as 4.
12	C/M RCS HELIUM sw	Two identical sw which control activation of two each helium isolation valves.		
	ON	Actuates two helium isolation valves to open position in respective system.	Repeater lt	
	(Center)	Removes valve actuating power.		
	OFF	Closes two helium isolation valves in respective system.	Repeater lt	

1.3.1.15 S/C Panel No. 16.

Figure 1-26 illustrates the SCM equivalent of S/C panel No. 16 and its associated IOS repeater panel. The controls on this panel are associated with the sequence control group and reaction control system simulation.

Table 1-19 defines the function and instructor visibility to the setting of each of the controls.

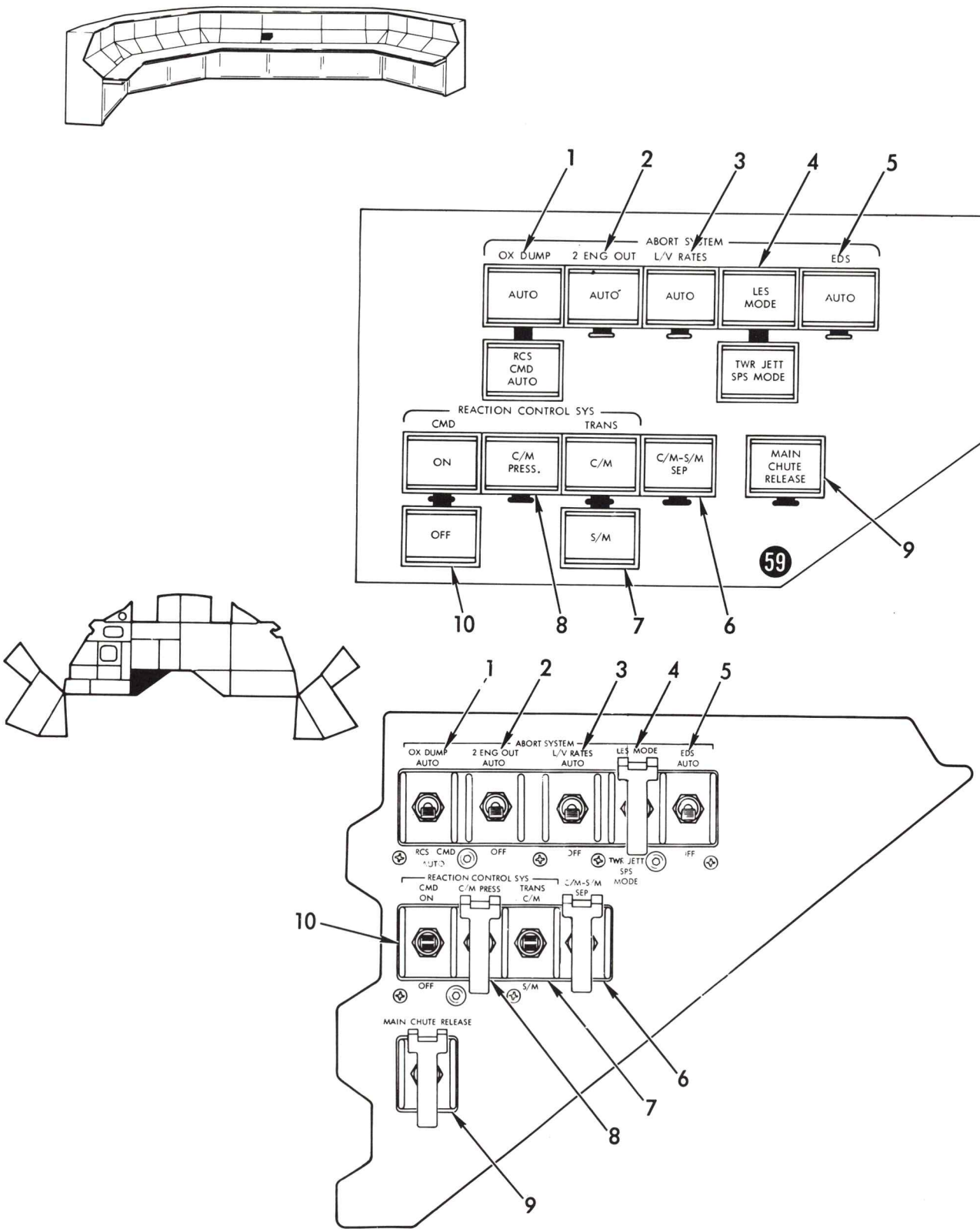

SM-6T-2-02-137C

Figure 1-26. Spacecraft Panel No. 16

Table 1-19. S/C Panel No. 16

Key	Nomenclature	Function	Instructor Visibility	Remarks
	ABORT SYSTEM			
1	OX DUMP sw			
	AUTO	Enables circuitry through 42-second timer to automatically dump the C/M RCS oxidizer during a pad or low-altitude abort.	Repeater lt	The 42-second timer starts at lift-off; auto dump capability is disabled after 42 seconds.
	RCS CMD AUTO	Disables the auto oxidizer dump and allows the G&N, SCS system to control the C/M RCS during descent from a medium-altitude, high-altitude and/or SPS abort.	Repeater lt	OX DUMP sw is placed to RCS CMD AUTO position 42 seconds after lift-off.
2	2 ENG OUT sw			
	AUTO	Enables emergency detection system circuitry for two-engine-out (below 90 percent thrust) automatic abort capability.	Repeater lt	
	OFF	Disables two-engine-out automatic abort circuitry.		
3	L/V RATES sw			
	AUTO	Enables emergency detection system for launch vehicle excessive rates (pitch, roll, or yaw) automatic abort capability.	Repeater lt	
	OFF	Disables launch vehicle excessive rates automatic abort circuitry.		
4	LES MODE/TWR JETT SPS MODE sw			
	LES MODE	Enables circuitry for using launch escape system during abort.	Repeater lt	After launch escape tower jettison, all aborts must be manually initiated and made in SPS mode.
	TWR JETT SPS MODE	Jettisons the launch escape tower and arms the adapter separation circuitry.	Repeater lt	
5	EDS sw			
	AUTO	Prepares the L/V-EDS automatic abort circuitry for automatic enabling at lift-off.	Repeater lt	
	OFF	Disable all automatic abort capabilities.		

Table 1-19. S/C Panel No. 16 (Cont)

Key	Nomenclature	Function	Instructor Visibility	Remarks
6	C/M-S/M SEP sw	Initiates C/M-S/M separation, C/M RCS pressurization, activates S/M controller, and transfers SCS control out-out from S/M RCS to C/M RCS.	Repeater lt	
	REACTION CONTROL SYS			
7	TRANS sw			
	C/M	Connects jet selection control circuitry to C/M RCS engines.	Repeater lt	Switch provides manual backup for automatic transfer. Also switches entry batteries onto main d-c buses and disables translational hand controller in C/M position.
	(Center)	Normal position provides automatic transfer to proper RCS engines.		
	S/M	Connects jet selection control circuitry to S/M RCS engines.	Repeater lt	
8	C/M PRESS. sw	Provides manual backup for automatic C/M RCS system pressurization.	Repeater lt	
9	MAIN CHUTE RELEASE sw	Releases the main landing parachutes from C/M after landing.	Repeater lt	
10	REACTION CONTROL SYS CMD sw			
	ON	Provides manual backup for connecting SCS to RCS jet selection logic.	Repeater lt	
	(Center)	Normal operating position enabling automatic switching of RCS jet selection logic to SCS.		
	OFF	Provides manual backup for disconnecting SCS from RCS jet selection logic.	Repeater lt	

1.3.1.16 S/C Panel No. 17.

Figure 1-27 illustrates the SCM equivalent of S/C panel No. 17, the HF antenna control panel, and its associated IOS repeater panel. The control on this panel is associated with the communications and instrumentation system simulation.

Table 1-20 defines the function and instructor visibility to the switch setting.

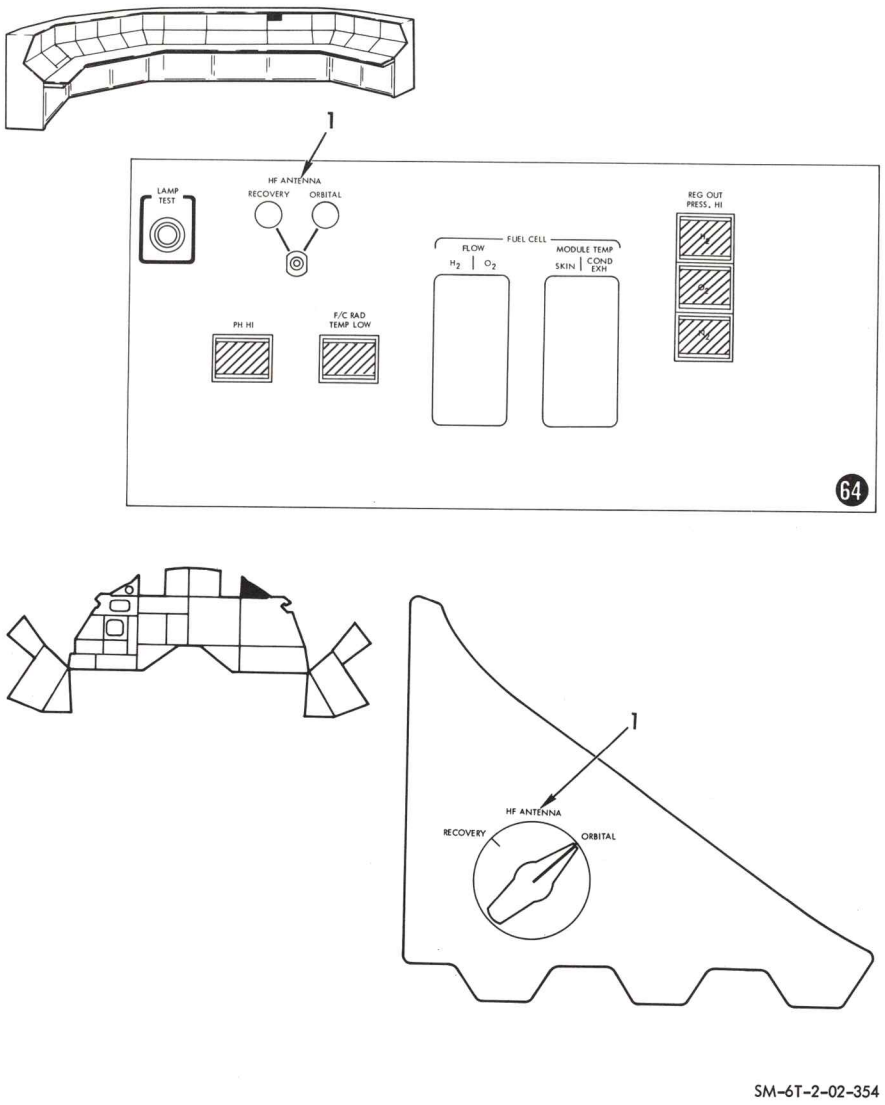

Figure 1-27. Spacecraft Panel No. 17

Table 1-20. S/C Panel No. 17

Key	Nomenclature	Function	Instructor Visibility	Remarks
1	HF ANTENNA selector sw			
	RECOVERY	Selects HF recovery antenna.	Repeater lt	
	ORBITAL	Selects HF orbital antenna on the S/M.	Repeater lt	

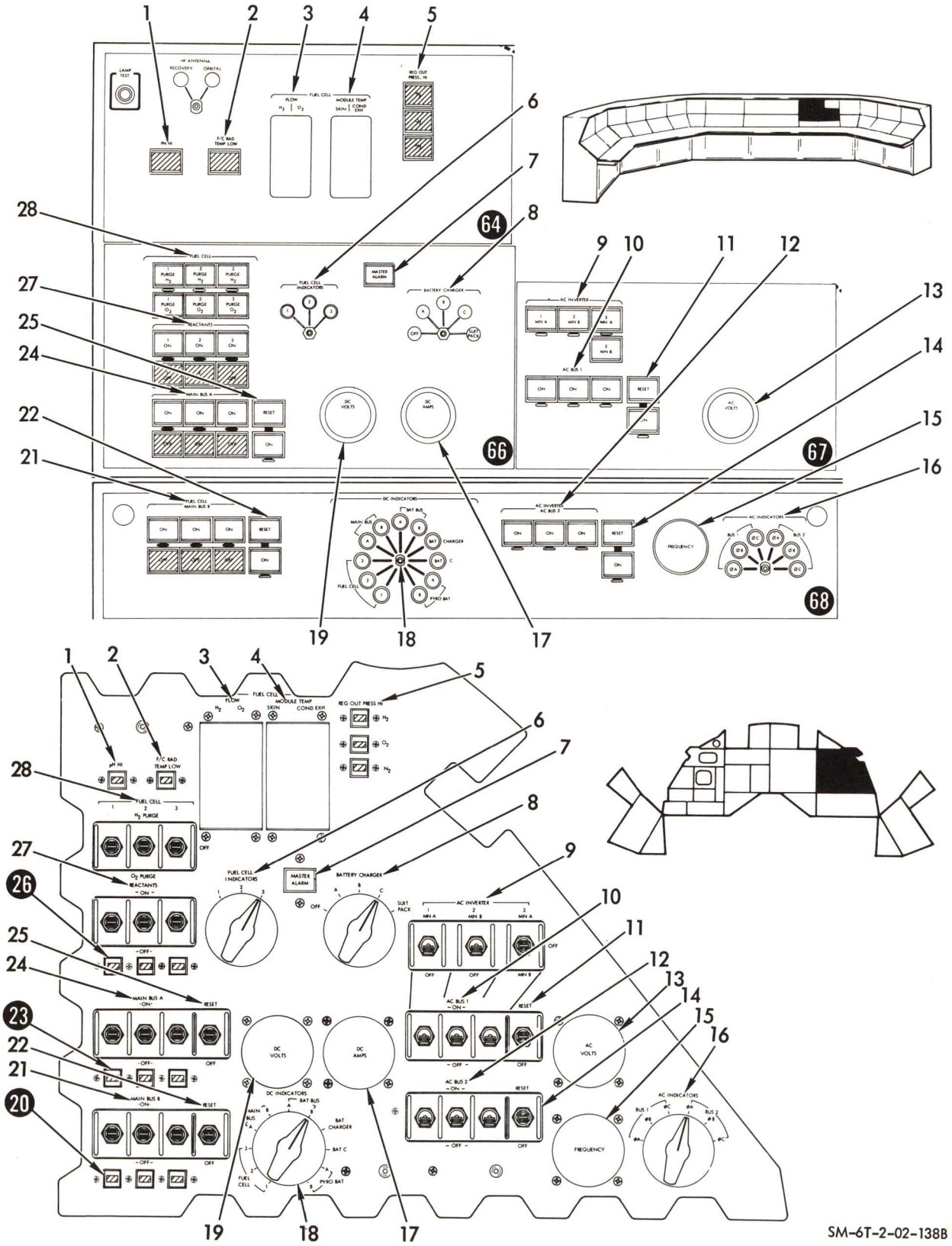

Figure 1-28. Electrical Power System Panel (Spacecraft Panel No. 18)

1.3.1.17 S/C Panel No. 18.

Figure 1-28 illustrates the SCM equivalent of S/C panel No. 18 and its associated IOS repeater panels. The controls and displays on this panel are associated with the electrical power system and caution and warning system simulation.

Table 1-21 defines the function and instructor visibility to the status of each of the controls and displays.

Table 1-21. Electrical Power System Panel (S/C Panel No. 18)

Key	Nomenclature	Function	Instructor Visibility	Remarks
1	pH HI event indicator	Striped-line display indicates pH factor of potable water from selected fuel cell is over 9.5; gray display indicates normal pH factor.	Repeater lt	Fuel cell to be monitored is selected by FUEL CELL INDICATORS sw.
2	F/C RAD TEMP LOW event indicator	Striped-line display indicates selected fuel cell radiator temperature is below -30°F.	Repeater lt	Glycol operating range is -50° to +300°F. Fuel cell to be monitored is selected by FUEL CELL INDICATORS sw.
3	FUEL CELL - FLOW indicators			
	H_2	Indicates flow rate of H_2 into selected fuel cell.	Repeater indicator	Normal flow is 0.036 to 0.090 lb/hr. Alarm limits are 0.036 lb/hr (lower) and 0.163 lb/hr (upper).
	O_2	Indicates flow rate of O_2 into selected fuel cell.	Repeater indicator	Normal flow is 0.284 to 0.72 lb/hr. Alarm limits are 0.284 lb/hr (lower) or 1.304 lb/hr (upper).
4	FUEL CELL - MODULE TEMP indicators			
	SKIN	Indicates skin temperature of selected fuel cell.	Repeater indicator	Normal indicator is 385° to 425°F. Alarm limits are 385°F (lower) and 500°F (upper).
	COND EXH	Indicates temperature of selected fuel cell condenser exhaust	Repeater indicator	Operating range is 155° to 170°F.
5	REG OUT PRESS HI event indicators			
	H_2	Striped-line display indicates H_2 regulator output pressure exceeds 75 psia on selected fuel cell; gray display indicates normal pressure.	Repeater lt	
	O_2	Striped-line display indicates O_2 regulator output pressure exceeds 75 psia on selected fuel cell; gray display indicates normal pressure.	Repeater lt	
	N_2	Striped-line display indicates output pressure of N_2 regulator exceeds 70 psia on selected fuel cell; gray display indicates normal pressure.	Repeater lt	

Table 1-21. Electrical Power System Panel (S/C Panel No. 18) (Cont)

Key	Nomenclature	Function	Instructor Visibility	Remarks
6	FUEL CELL INDICATORS rotary sw	Selects desired fuel cell to be monitored by display indicators.	Repeater sw-lt	Selected SCM position of sw is indicated at IOS. However, I/O may, by depressing any unlighted P/B associated with sw, read other parameters. SCM displays are not affected by I/O action.
7	MASTER ALARM sw-lt	Illumination of lt indicates a malfunction or out-of-tolerance condition as indicated by illumination of applicable system status lt on panels No. 10 and/or No. 11.	Repeater lt	Illumination of lt is accompanied by audio tone in each headset. Depressing sw resets alarm circuitry which extinguishes MASTER ALARM and MASTER WARNING lt and silences audio tone.
8	BATTERY CHARGER rotary sw	Energizes battery charger and selects battery to be charged.	Repeater lt	
9	AC INVERTER			
	Sw 1			
	MNA	Applies d-c power to a-c inverter 1.	Repeater lt	Application of d-c power to selected inverter is accomplished by motor-driven sw controlled by AC INVERTER sw.
	OFF	Disconnects d-c power from a-c inverter 1.		
	Sw 2			
	MNB	Applies d-c power to a-c inverter 2.	Repeater lt	
	OFF	Disconnects d-c power from a-c inverter 2.		
	Sw 3			
	MNA	Applies d-c power from MAIN bus A to a-c inverter 3.	Repeater lt	
	OFF	Disconnects d-c power from inverter 3.		
	MNB	Applies d-c power from main bus B to a-c inverter 3.	Repeater lt	
10	AC BUS 1 sw (Group)			
	Sw 1			
	ON	Applies a-c output of inverter 1 to a-c bus 1.	Repeater lt	
	OFF	Disconnects a-c output of inverter 1 from a-c bus 1.		

Table 1-21. Electrical Power System Panel (S/C Panel No. 18) (Cont)

Key	Nomenclature	Function	Instructor Visibility	Remarks
	Sw 2			
	ON	Applies a-c output of inverter 2 to a-c bus 1.	Repeater lt	
	OFF	Disconnects a-c output of inverter 2 from a-c bus 1.		
	Sw 3			
	ON	Applies a-c output of inverter 3 to a-c bus 1.	Repeater lt	
	OFF	Disconnect a-c output of inverter 3 from a-c bus 1.		
11	RESET - OFF sw			
	RESET	Resets a-c bus 1 over-undervoltage and overload sensing unit.	Repeater lt	Resetting sensing unit extinguishes AC BUS 1 FAIL and AC BUS 1 OVER-LOAD caution and warning lt when failure occurs.
	(Center)	Energized a-c bus 1 over-undervoltage and overload sensing unit.	ON repeater lt	
	OFF	Disconnects a-c bus 1 over-undervoltage and overload sensing unit from system.		
12	AC BUS 2 sw (Group)			
	Sw 1			
	ON	Applies a-c output of inverter 1 to a-c bus 2.	Repeater lt	
	OFF	Disconnects a-c output of inverter 1 from a-c bus 2.		
	Sw 2			
	ON	Applies a-c output of inverter 2 to a-c bus 2.	Repeater lt	
	OFF	Disconnects a-c output of inverter 2 from a-c bus 2.		
	Sw 3			
	ON	Applies a-c output of inverter 3 to a-c bus 2.	Repeater lt	
	OFF	Disconnects a-c output of inverter 3 from a-c bus 2.		
13	AC VOLTS meter	Indicates a-c voltage of selected source and phase.	Repeater meter	Meter used in conjunction with AC INDICATORS sw.

Table 1-21. Electrical Power System Panel (S/C Panel No. 18) (Cont)

Key	Nomenclature	Function	Instructor Visibility	Remarks
14	RESET - OFF sw			
	RESET	Resets a-c bus 2 over-undervoltage and overload sensing unit.	Repeater lt	Resetting sensing unit also extinguishes AC BUS 2 FAIL and AC BUS 2 OVERLOAD caution and warning lt when failure occurs.
	(Center)	Energizes a-c bus 2 over-undervoltage and overload sensing unit.	ON repeater lt	
	OFF	Disconnects a-c bus 2 over-undervoltage and overload sensing unit from the system.		
15	FREQUENCY meter	Indicates frequency of selected source and phase.	Repeater meter	Meter used in conjunction with AC INDICATORS sw.
16	AC INDICATORS rotary sw	Provides means for monitoring 3-phase voltage and frequency of a-c inverters.	Repeater sw-lt	Same as 6. Operating range for 3-phase a-c voltage is 115±2 vac at 393 to 407 cps.
17	DC AMPS meter	Indicates d-c current of selected source, unit, or bus.	Repeater meter	Meter used in conjunction with DC INDICATORS sw.
18	DC INDICATORS rotary sw	Selects power source, bus, or unit to be monitored by DC VOLTS and DC AMPS meter.	Repeater sw-lt	Same as 6.
19	DC VOLTS meter	Indicates d-c voltage of selected source, unit, or bus.	Repeater meter	Meter used in conjunction with DC INDICATORS sw.
20	Event indicators (C/M only)	Indicates whether or not fuel cell output is connected to main bus B; striped line indicates fuel cell disconnected from bus; gray display indicates fuel cell connected to bus.	Reduced intensity of related OFF lt indicates fuel cell disconnected from bus.	
21	MAIN BUS B sw (group)			
	Sw 1			
	ON	Applies output of fuel cell 1 to d-c main bus B.	Repeater lt	
	(Center)	Connects C&W alarm and F/C BUS DISCONNECT lt to fuel cell 1 control switching.		
	OFF	Removes output of fuel cell 1 from d-c main bus B.	Repeater lt	

Table 1-21. Electrical Power System Panel (S/C Panel No. 18) (Cont)

Key	Nomenclature	Function	Instructor Visibility	Remarks
	Sw 2			
	ON	Applies output of fuel cell 2 to d-c main bus B.	Repeater lt	
	(Center)	Connects C&W alarm and F/C BUS DISCONNECT lt to fuel cell 2 control switching.		
	OFF	Removes output of fuel cell 2 from d-c main bus B.	Repeater lt	
	Sw 3			
	ON	Applies output of fuel cell 3 to d-c main bus B.	Repeater lt	
	(Center)	Connect C&W alarm and F/C BUS DISCONNECT lt to fuel cell 3 control switching.		
	OFF	Removes output of fuel cell 3 from d-c main bus B.	Repeater lt	
22	RESET - OFF sw			
	RESET	Reset d-c main bus B undervoltage sensing unit.	Repeater lt	
	(Center)	Connects MN BUS B UNDERVOLT lt to d-c bus A undervoltage sensing circuit.	ON repeater lt	
	OFF	Disconnects MN BUS B UNDERVOLT lt from d-c bus B undervoltage sensing circuit.		
23	Event indicators (C/M only)	Indicates whether or not a fuel cell is connected to main bus A. Striped line display indicates fuel cell disconnected from bus; gray display indicates fuel cell connected to bus.	Reduced intensity of related OFF lt indicates fuel cell disconnected.	
24	MAIN BUS A sw (group)			
	Sw 1			
	ON	Applies output of fuel cell 1 to main bus A.	Repeater lt	
	(Center)	Connects C&W alarm and F/C BUS DISCONNECT lt to fuel cell 1 control switching.		

Table 1-21. Electrical Power System Panel (S/C Panel No. 18) (Cont)

Key	Nomenclature	Function	Instructor Visibility	Remarks
	OFF	Removes output of fuel cell 1 from main bus A.	Repeater lt	
	Sw 2			
	ON	Applies output of fuel cell 2 to main bus A.	Repeater lt	
	(Center)	Connects C&W alarm and F/C BUS DISCONNECT lt to fuel cell 2 control switching.		
	OFF	Disconnect output of fuel cell 2 from main bus A.	Repeater lt	
	Sw 3			
	ON	Applies output of fuel cell 3 to main bus A.	Repeater lt	
	(Center)	Connects C&W alarm and F/C BUS DISCONNECT lt to fuel cell 3 control switching.		
	OFF	Removes output of fuel cell 3 from main bus A.	Repeater lt	
25	RESET - OFF sw			
	RESET	Resets main bus A undervoltage sensing unit.	Repeater lt	
	(Center)	Connects MN BUS A UNDERVOLT lt to undervoltage sensing unit.	ON repeater lt	
	OFF	Disconnects MN BUS A UNDERVOLT lt from undervoltage sensing circuit.		
26	Event indicators (C/M only)	Striped-line display indicates O_2 shutoff valves on fuel cells are closed; gray display indicates valves open.	Reduced intensity on related OFF lt indicates valves closed.	
27	FUEL CELL - REACTANTS sw (group)			
	Sw 1			
	ON	Connects power to fuel cell 1 H_2 and O_2 valves driving valves open.	Repeater lt	
	(Center)	Normal operating position which maintains valves in last selected position.		

Table 1-21. Electrical Power System Panel (S/C Panel No. 18) (Cont)

Key	Nomenclature	Function	Instructor Visibility	Remarks
	OFF	Connects power to fuel cell 1 H_2 and O_2 valves driving valves closed.	Repeater lt	
	Sw 2			
	ON	Connects power to fuel cell 2 H_2 and O_2 driving valves open.	Repeater lt	
	(Center)	Normal operating position which maintains valves in last selected position.		
	OFF	Connects power to fuel cell 2 H_2 and O_2 valves driving valves closed.	Repeater lt	
	Sw 3			
	ON	Connects power to fuel cell 3 H_2 and O_2 valves driving valves open.	Repeater lt	
	(Center)	Normal operating position which maintains valves in last selected position.		
	OFF	Connects power to fuel cell 3 H_2 and O_2 valves driving valves closed.	Repeater lt	
28	FUEL CELL - H_2/O_2 PURGE sw (group)			
	Sw 1			
	H_2 PURGE	Opens fuel cell 1 purge valve purging impurities from H_2 electrodes.	Repeater lt	When purge is executed, C&W alarm system is activated due to abnormal flow rate of reactants in selected fuel cell.
	OFF	Removes power from purge valve closing valve.		
	O_2 PURGE	Open purge valve on fuel cell 1 purging impurities from O_2 electrode.	Repeater lt	
	Sw 2			
	H_2 PURGE	Opens fuel cell 2 purge valve purging impurities from H_2 electrodes.	Repeater lt	
	OFF	Removes power from purge valve closing valve.		
	O_2 PURGE	Open fuel cell 2 purge valve purging impurities from O_2 electrodes.	Repeater lt	

Table 1-21. Electrical Power System Panel (S/C Panel No. 18) (Cont)

Key	Nomenclature	Function	Instructor Visibility	Remarks
	Sw 3			
	H_2 PURGE	Opens fuel cell 3 purge valve purging impurities from H_2 electrodes.	Repeater lt	
	OFF	Removes power from purge valve, closing valve.		
	O_2 PURGE	Opens fuel cell 3 purge valve purging impurities from O_2 electrodes.	Repeater lt	

1.3.1.18 S/C Panel No. 19.

Figure 1-29 illustrates the SCM equivalent of S/C panel No. 19 and its associated IOS repeater panel. The control and display on this panel are associated with the communications and instrumentation system simulation.

Table 1-22 defines the function and instructor visibility to the status of the control and display on this panel.

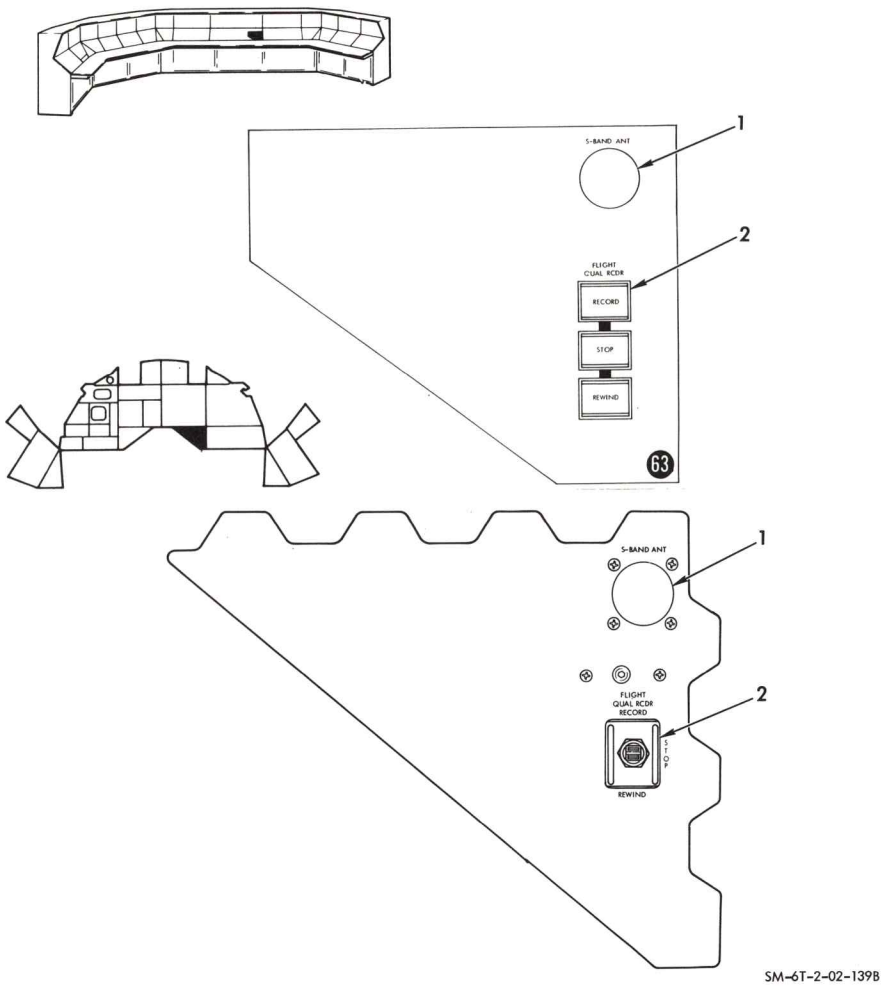

Figure 1-29. Antenna Control System Panel (Spacecraft Panel No. 19)

Table 1-22. Antenna Control System Panel (S/C Panel No. 19)

Key	Nomenclature	Function	Instructor Visibility	Remarks
1	S-BAND ANT meter	Displays magnitude of received USBE-AGC signal.	Repeater meter	
2	FLIGHT QUAL RCDR sw			
	RECORD	Activates flight qualification recorder to record flight qualification instrumentation data.	Repeater lt	Flight qualification recorder not included in AMS configuration.
	STOP	Deactivates flight qualification recorder.	Repeater lt	
	REWIND	Activates flight qualification recorder in reverse direction to rewind tape.	Repeater lt	

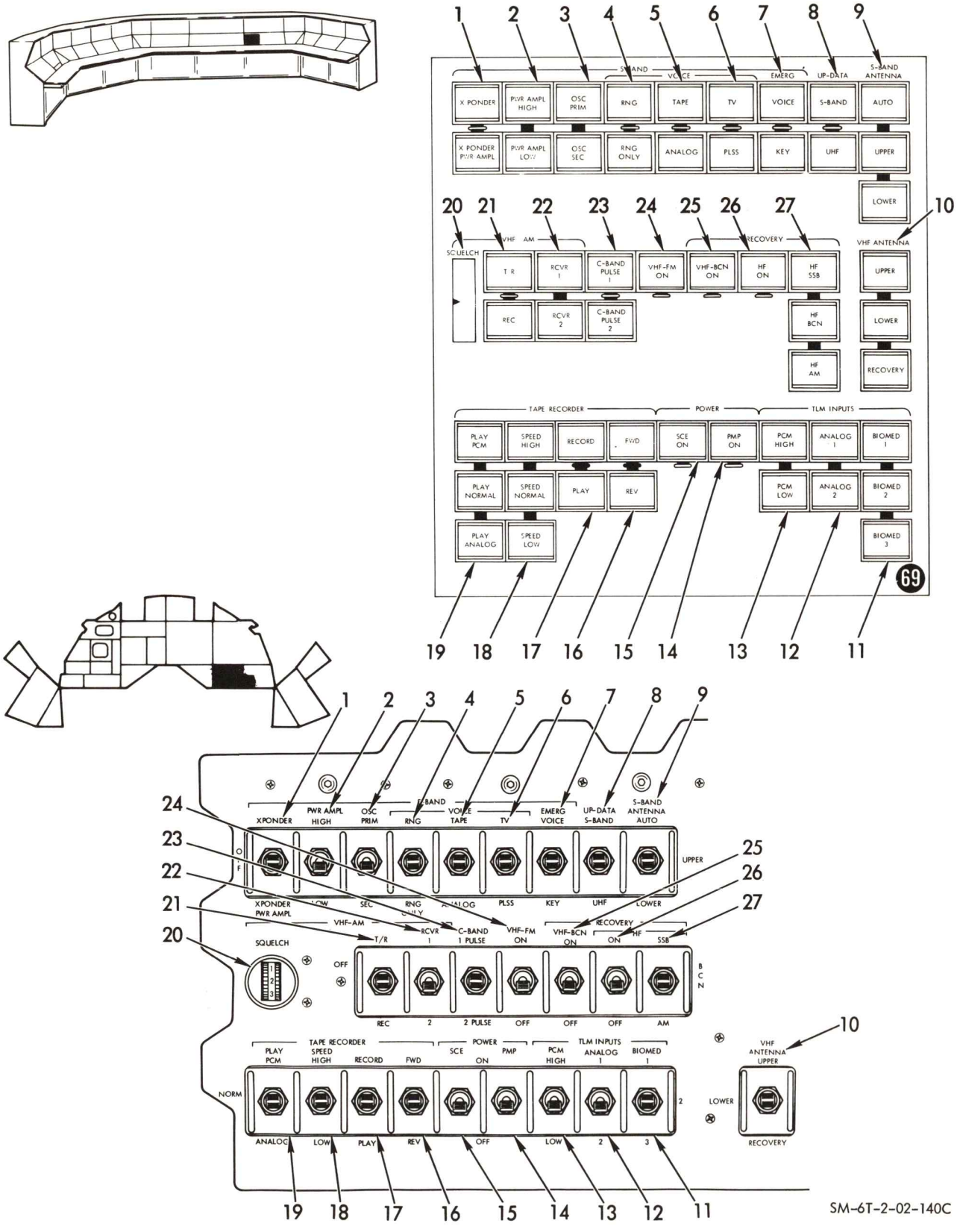

Figure 1-30. Communications Control Subpanel (Spacecraft Panel No. 20)

1.3.1.19 S/C Panel No. 20.

Figures 1-30 and 1-31 illustrate the SCM equivalent of S/C panel No. 20 and its associated IOS repeater panels. The controls on this panel are associated with the communication, instrumentation, and the service propulsion system simulation.

Tables 1-23 and 1-24 define the function and instructor visibility to the setting of each of the controls.

Table 1-23. Communications Control Subpanel (S/C Panel No. 20)

Key	Nomenclature	Function	Instructor Visibility	Remarks
1	S-BAND sw XPONDER - OFF - XPONDER PWR AMPL sw			
	XPONDER	Activates USBE transponder and applies power to S-BAND ANTENNA sw.	Repeater lt	Power output is 200 milliwatts in this mode.
	OFF	Removes power from transponder; removes power from S-BAND ANTENNA sw.		
	XPONDER PWR AMPL	Activates USBE transponder, applies power to S-BAND PA and S-BAND ANTENNA sw.	Repeater lt	Power output in this mode governed by position of PWR AMPL sw.
2	PWR AMPL sw			
	HIGH	Selects 20-watt output mode of S-BAND PA.	Repeater lt	PWR AMPL is effective only when XPONDER - OFF XPONDER PWR AMPL sw is in XPONDER PWR AMPL position.
	LOW	Selects 5-watt output mode of S-BAND PA.	Repeater lt	
3	OSC sw			
	PRIM	Selects primary oscillator for use with USBE transmitter.	Repeater lt	
	SEC	Selects secondary oscillator for use with USBE transmitter.	Repeater lt	
4	VOICE			
	RNG - RNG ONLY sw			
	RNG	Selects ranging, PCM telemetry, and voice modes in PMP.	Repeater lt	
	OFF	None.		
	RNG ONLY	Selects voice mode in PMP; selects ranging and PM modes in USBE.	Repeater lt	
5	VOICE			
	TAPE - ANALOG sw			
	TAPE	Selects tape, voice, and PCM telemetry modes in PMP; selects FM mode in USBE	Repeater lt	
	OFF	None.		
	ANALOG	Selects real time analog data, voice, and PCM telemetry in PMP; selects FM mode in USBE.	Repeater lt	

Table 1-23. Communications Control Subpanel (S/C Panel No. 20) (Cont)

Key	Nomenclature	Function	Instructor Visibility	Remarks
6	VOICE			
	TV/PLSS sw			
	TV	Selects TV, voice, and PCM telemetry modes in PMP; selects FM mode in USBE.	Repeater lt	
	OFF	None.		
	PLSS	Selects voice, PCM, and EVA telemetry modes in PMP; selects FM mode in USBE.	Repeater lt	
7	EMERG - VOICE/KEY sw			
	VOICE	Selects emergency FM mode in USBE transponder; selects emergency voice mode in PMP.	Repeater lt	
	OFF	Selects no mode.		
	KEY	Selects PM mode in USBE transponder; selects emergency key mode in PMP.	Repeater lt	
8	UP-DATA sw			
	S-BAND	Enables up-data link equipment; selects S-band receiver for up-data reception.	Repeater lt	
	OFF	Disables up-data link equipment.		
	UHF	Enables up-data link equipment; selects UHF receiver for up-data reception.	Repeater lt	
9	S-BAND ANTENNA sw			
	AUTO	Permits automatic selection of SCIN antenna for use by USBE.	Repeater lt	
	UPPER	Selects -Z SCIN antenna for use by USBE.	Repeater lt	
	LOWER	Selects +Z SCIN antenna for use by USBE.	Repeater lt	
10	VHF ANTENNA sw			
	UPPER	Selects SCIN antenna on +Z-axis.	Repeater lt	
	LOWER	Selects SCIN antenna on -Z-axis.	Repeater lt	
	RECOVERY	Selects VHF recovery antenna No. 2	Repeater lt	

Table 1-23. Communications Control Subpanel (S/C Panel No. 20) (Cont)

Key	Nomenclature	Function	Instructor Visibility	Remarks
	TLM IMPUTS sw			
11	BIOMED sw			
	1	Selects hardline biomedical data from commander for PCM transmission via S-band.	Repeater lt	
	2	Selects hardline biomedical data from navigator for PCM transmission via S-band	Repeater lt	
	3	Selects hardline biomedical data from engineer for PCM transmission via S-band.	Repeater lt	
12	ANALOG sw			
	1	Selects analog 1 data mode in PMP.	Repeater lt	
	2	Selects analog 2 data mode in PMP.	Repeater lt	
13	PCM sw			
	HIGH	Selects normal PCM TLM data mode rate (51.2 kbps) in PCM equipment; selects high-speed assurance mode of DSE.	Repeater lt	
	LOW	Selects narrow band PCM TLM data mode (1.6 kbps) in PCM equipment; selects low-speed assurance mode in DSE.	Repeater lt	
	POWER sw			
14	PMP sw			
	ON	Applies power to PMP.	Repeater lt	
	OFF	Disconnects power from PMP.		
15	SCE sw			
	ON	Applies power to SCE.	Repeater lt	
	OFF	Disconnects power from SCE.		
	TAPE RECORDER sw			
16	FWD/REV sw			
	FWD	Applies power to drive tape transport in forward direction.	Repeater lt	
	(Center)	Applies power to recorder which holds tape transport stationary.		

Table 1-23. Communications Control Subpanel (S/C Panel No. 20) (Cont)

Key	Nomenclature	Function	Instructor Visibility	Remarks
	REV	Applies power to drive tape transport in reverse direction.	Repeater lt	
17	RECORD - PLAY sw			
	RECORD	Selects record mode of PMP and applies power to DSE record circuitry.	Repeater lt	
	(Center)	Removes power from DSE and DSE-PMP interface.		
	PLAY	Selects playback mode of PMP and applies power to DSE playback circuitry.	Repeater lt	
18	SPEED sw			
	HIGH	Selects high-speed (120 ips) mode of tape transport.	Repeater lt	
	NORM	Selects normal-speed (15 ips) mode of tape transport.	Repeater lt	
	LOW	Selects low-speed (3.75 ips) mode of tape transport.	Repeater lt	
19	PLAY sw			
	PCM	Selects PCM playback mode of PMP and DSE.	Repeater lt	
	NORM	Selects PCM and analog playback mode of PMP and DSE.	Repeater lt	
	ANALOG	Selects analog playback mode of PMP and DSE.	Repeater lt	
	VHF - AM			
20	SQUELCH thumbwheel control	Increases or decreases sensitivity of squelch gate.	Repeater indicator	
21	T/R - OFF - REC sw			
	T/R	Applies power to transmitter and receiver circuitry in VHF-AM transmitter-receiver.	Repeater lt	
	OFF	Removes power from VHF-AM transmitter-receiver.		
	REC	Applies power to receiver only of VHF-AM transmitter-receiver.	Repeater lt	
22	RCVR sw			
	1	Selects VHF-AM receiver frequency No. 1.	Repeater lt	No. 1 frequency is 296.8 mc.
	2	Selects VHF-AM receiver frequency No. 2.	Repeater lt	No. 2 frequency is 259.7 mc.

Table 1-23. Communications Control Subpanel (S/C Panel No. 20) (Cont)

Key	Nomenclature	Function	Instructor Visibility	Remarks
23	C-BAND sw			
	1 PULSE	Applies power to C-band transponder and selects 1-pulse mode of operation.	Repeater lt	
	OFF	Removes power from C-band transponder.		
	2 PULSE	Applies power to C-band transponder and select 2-pulse mode of operation.	Repeater lt	
24	VHF-FM sw			
	ON	Energizes VHF-FM transmitter.	Repeater lt	
	OFF	Removes power from VHF-FM transmitter.		
	RECOVERY sw			
25	VHF-BCN sw			
	ON	Applies power to VHF recovery beacon.	Repeater lt	
	OFF	Removes power from VHF recovery beacon.		
26	HF-ON/OFF sw			
	ON	Applies power to HF transceiver.	Repeater lt	
	OFF	Removes power from HF transceiver.		
27	SSB/BCN/AM sw			
	SSB	Selects SSB mode of HF transceiver.	Repeater lt	
	BCN	Selects AM mode of HF transceiver and closes keying circuit of HF transmitter.	Repeater lt	
	AM	Selects AM mode of HF transceiver.	Repeater lt	

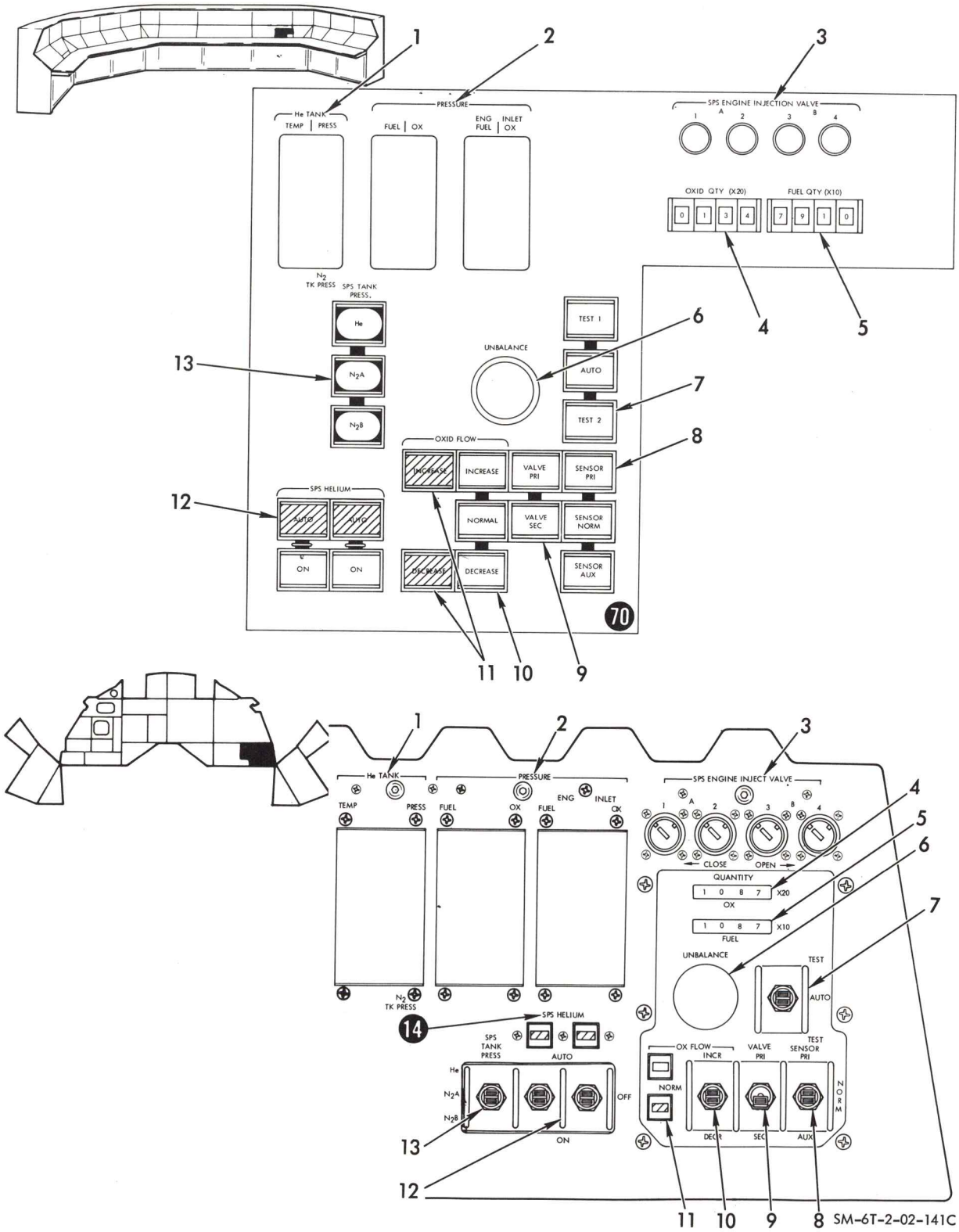

Figure 1-31. SPS Quantity Gaging Subpanel (Spacecraft Panel No. 20)

Table 1-24. SPS Quantity Gaging Subpanel (S/C Panel No. 20)

Key	Nomenclature	Function	Instructor Visibility	Remarks
1	He TANK indicators			
	TEMP	Provides constant monitoring of unregulated helium tank temperature.	Repeater indicator	
	PRESS - N_2 TK PRESS	Time-shared indicator indicating unregulated helium tank pressure, SPS system. Gaseous nitrogen tank pressure or SPS system B gaseous nitrogen tank pressure as selected by SPS TANK PRESS sw.	Repeater indicator	
2	PRESSURE indicators			
	FUEL	Provides constant monitoring of regulated helium pressure prior to entering fuel tank.	Repeater indicator	
	OX	Provides constant monitoring of regulated helium pressure prior to entering oxidizer tank.	Repeater indicator	
	ENG INLET - FUEL	Provides monitoring of fuel pressure at engine interface.	Repeater indicator	
	ENG INLET - OX	Provides constant monitoring of oxidizer pressure at engine interface.	Repeater indicator	
3	SPS ENGINE INJECT VALVE indicators 1, 2, 3, 4	Provides indication of SPS engine main propellant valves open or closed condition.	Repeater indicators	Left needle deflection indicates CLOSE; right needle deflection indicates OPEN.
4	QUANTITY - OX display	Digital counter display indicating oxidizer tank quantity remaining (pounds times 20).	Repeater display	
5	QUANTITY - FUEL display	Digital counter display indicating fuel tank quantity remaining (pounds times 10).	Repeater display	
6	UNBALANCE meter	Graduated meter indicating propellant mixture unbalance.	Repeater meter	Meter needle at zero indicates proper propellant ratio. Upper half of meter indicates increased oxidizer flow required; lower half indicates decreased flow.
7	TEST - AUTO - TEST sw			
	TEST (up)	Applies simulated input to propellant quantity gaging and utilization system control unit causing digital display counters and UNBALANCE meter to function for test check.	Repeater lt	
	AUTO	Normal operating position.	Repeater lt	

Table 1-24. SPS Quantity Gaging Subpanel (S/C Panel No. 20) (Cont)

Key	Nomenclature	Function	Instructor Visibility	Remarks
	TEST (down)	Applies simulated input for test purposes as TEST (up) except in reverse polarity.	Repeater lt	
8	SENSOR sw			
	PRI	Applies output from primary propellant quantity sensing system to propellant quantity indicating and warning devices.	Repeater lt	
	NORM	Applies output from both primary and auxiliary sensing systems to propellant quantity warning devices, and output from primary propellant sensing system to propellant quantity indicating devices.		
	AUX	Applies output from auxiliary propellant sensing system to propellant quantity warning and indicating devices.	Repeater lt	
9	VALVE sw			
	PRI	Applies power to primary servo amplifier for propellant utilization valve.	Repeater lt	
	SEC	Applies power to secondary servo amplifier for propellant utilization valve.	Repeater lt	
10	OX FLOW - INCR - DECR sw			
	INCR	Increases oxidizer flow to obtain proper propellant utilization mixture ratio.	Repeater lt	
	NORM	Provides signal for normal oxidizer flow to maintain propellant utilization mixture ratio.	Repeater lt	
	DECR	Decreases oxidizer flow to obtain proper propellant utilization mixture ratio.	Repeater lt	
11	OX FLOW event indicators			
	(Upper indicator)	Striped-line display indicates propellant utilization valve in INCR position; gray display indicates it is not.	Repeater lt	When propellant utilization valve is in normal position, both indicators will be gray.
	(Lower indicator)	Striped-line display indicates propellant utilization valve in the DECR position; gray display indicates it is not.	Repeater lt	

Table 1-24. SPS Quantity Gaging Subpanel (S/C Panel No. 20) (Cont)

Key	Nomenclature	Function	Instructor Visibility	Remarks
12	SPS HELIUM sw (2)			
	AUTO	Provides for automatic application and removal of power from helium isolation valve solenoid.	Repeater lt	Two identical switches. Each switch controls helium flow to one of dual redundant pressure regulator assemblies.
	OFF	Removes power from helium isolation valve solenoid.		
	ON	Applies power to helium isolation valve solenoid.	Repeater lt	
13	SPS TANK PRESS sw			
	He	Selects SPS helium tank pressure to be monitored on He TANK PRESS indicator.	Repeater sw-lt	Instructor may monitor readings other than those selected by trainee by depressing the momentary sw-lt for the desired readings.
	N_2A	Selects SPS system A gaseous nitrogen tank pressure to be monitored on N_2 TANK PRESS indicator.	Repeater sw-lt	
	N_2B	Selects SPS system B gaseous nitrogen tank pressure to be monitored on N_2 TANK PRESS indicator.	Repeater sw-lt	
14	SPS HELIUM event indicators (2) (C/M only)	Striped-line display indicates energized condition of valve solenoid; gray display indicates de-energized condition.		

1.3.1.20 S/C Panel No. 21.

Figure 1-32 illustrates the SCM equivalent of S/C panel No. 21 and its associated IOS repeater panels. The controls on this panel are associated with the reaction control system, the environmental control system, and the electrical power system simulation.

Table 1-25 defines the function and instructor visibility to the setting of each on the controls.

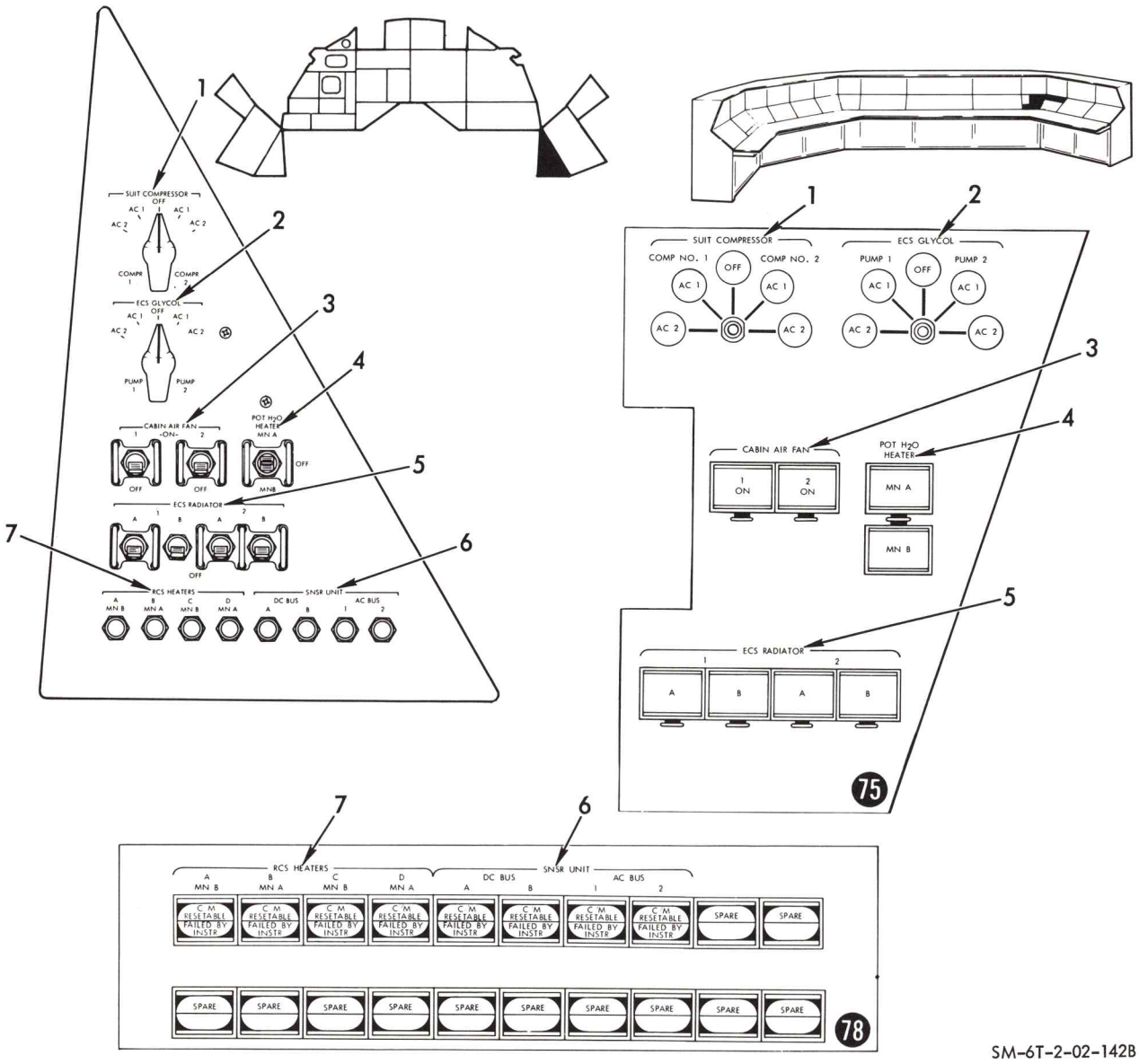

Figure 1-32. Spacecraft Panel No. 21

Table 1-25. S/C Panel No. 21

Key	Nomenclature	Function	Instructor Visibility	Remarks
1	SUIT COMPRESSOR sw			
	COMP 1			
	AC_1	Applies a-c power to No. 1 suit compressor motor from bus 1.	Repeater lt	Compressor output is 50.6 cfm and 0.56 psi ΔP in prelaunch, 43.7 cfm and ΔP of 0.35 psi for normal operation, and 31.5 cfm and ΔP of 0.29 psi during emergency mode.
	AC_2	Applies a-c power to No. 1 suit compressor motor from bus 2.	Repeater lt	
	OFF	Removes a-c power from suit compressor motors.	Repeater lt	
	COMP 2			
	AC_1	Applies a-c power to No. 2 suit compressor motor from bus 1.	Repeater lt	
	AC_2	Applies a-c power to No. 2 suit compressor motor from bus 2.	Repeater lt	
2	ECS GLYCOL sw			
	PUMP 1			
	AC_1	Applies a-c power to motor of No. 1 water-glycol pump from bus 1.	Repeater lt	Pump operates at 200 lb/hr at a pressure rise of 29.5 psi, with inlet of 7.5±1.5 psig and 100°F (max.).
	AC_2	Applies a-c power to No. 1 water-glycol pump from bus 2.	Repeater lt	
	OFF	Removes a-c power from water-glycol pump motors.	Repeater lt	
	PUMP 2			
	AC_1	Applies a-c power to No. 2 water-glycol pump from bus 1.	Repeater lt	
	AC_2	Applies a-c power to No. 2 water-glycol pump from bus 2.	Repeater lt	
3	CABIN AIR FAN sw			
	Sw 1			
	ON	Applies a-c power to No. 1 cabin air fan motor.	Repeater lt	
	OFF	Removes power from No. 1 cabin air fan motor.		

Table 1-25. S/C Panel No. 21 (Cont)

Key	Nomenclature	Function	Instructor Visibility	Remarks
	Sw 2			
	ON	Applies a-c power to No. 2 cabin air fan motor.	Repeater lt	
	OFF	Removes power from No. 2 cabin air fan motor.		
4	POT H_2O HEATER sw			
	MN A	Applies d-c power to potable water heater from main bus A.	Repeater lt	
	OFF	Removes power from potable water heater.		
	MN B	Applies d-c power to potable water heater from main bus B.	Repeater lt	
5	ECS RADIATOR sw			
	Sw 1			
	A (on)	Applies a-c power to space radiator isolation actuator valve 1A; opening valve permits water-glycol to flow to the S/M radiator.	Repeater lt	
6	SNSR UNIT circuit breaker			
	DC BUS			
	A	Applies d-c power from battery relay bus to under-voltage sensing unit through MAIN BUS A RESET sw.	Repeater sw-lt	Depressing circuit breaker sw-lt trips associated circuit breaker in C/M and illuminates FAILED BY INSTRUCTOR portion of split-level indicator. The circuit breaker is not resetable until sw is depressed second time, at which time, CM RESETABLE portion of split-level indicator illuminates
	B	Applies d-c power from battery relay bus to under-voltage sensing unit through MAIN BUS B RESET sw.	Repeater sw-lt	
	AC BUS			
	1	Applies d-c power from battery relay bus to a-c over-undervoltage and overload sensing unit through AC BUS 1 - RESET sw.	Repeater sw-lt	
	2	Applies d-c power from battery relay bus to a-c over-undervoltage and overload sensing unit through AC BUS 2 - RESET sw.	Repeater sw-lt	
7	RCS HEATERS circuit breakers			
	A MN B	Applies power from d-c main bus B to package heater in S/M RCS quad A.	Repeater sw-lt	Same as 6.

Table 1-25. S/C Panel No. 21 (Cont)

Key	Nomenclature	Function	Instructor Visibility	Remarks
	B MN A	Applies power from d-c main bus A to package heater in S/M RCS quad B.	Repeater sw-lt	
	C MN B	Applies power from d-c main bus B to package heater in S/M RCS quad C.	Repeater sw-lt	
	D MN A	Applies power from d-c main bus A to package heater in S/M RCS quad D.	Repeater sw-lt	
	OFF	Applies a-c power to space radiator isolation actuator valve shutting off water-glycol flow to S/M radiator.		
	B (on)	Applies a-c power to space radiator isolation actuator valve 1B opening valve permitting water-glycol flow to S/M radiator.	Repeater lt	
	OFF	Applies power to space radiator isolation valve 1B shutting off water-glycol flow to S/M radiator.		
	Sw 2			
	A (on)	Applies power to space radiator isolation valve 2A permitting water-glycol flow to S/M radiator.	Repeater lt	
	OFF	Applies power to space radiator isolation valve 2A shutting off water-glycol flow to S/M radiator.		
	B (on)	Applies power to space radiator isolation valve 2B permitting water-glycol flow to S/M radiator.	Repeater lt	
	OFF	Applies power to space radiator valve 2B shutting off water-glycol valve from S/M radiator.		

1.3.1.21 S/C Panel No. 22.

Figure 1-33 illustrates the SCM equivalent of S/C panel No. 22, right hand circuit breaker panel, and its associated IOS repeater panels. The controls on this panel are associated with the electrical power system, environmental control system, communication and instrumentation, guidance and navigation, and the sequence control group system simulations.

Table 1-26 defines the function and instructor visibility to the setting of each of the controls.

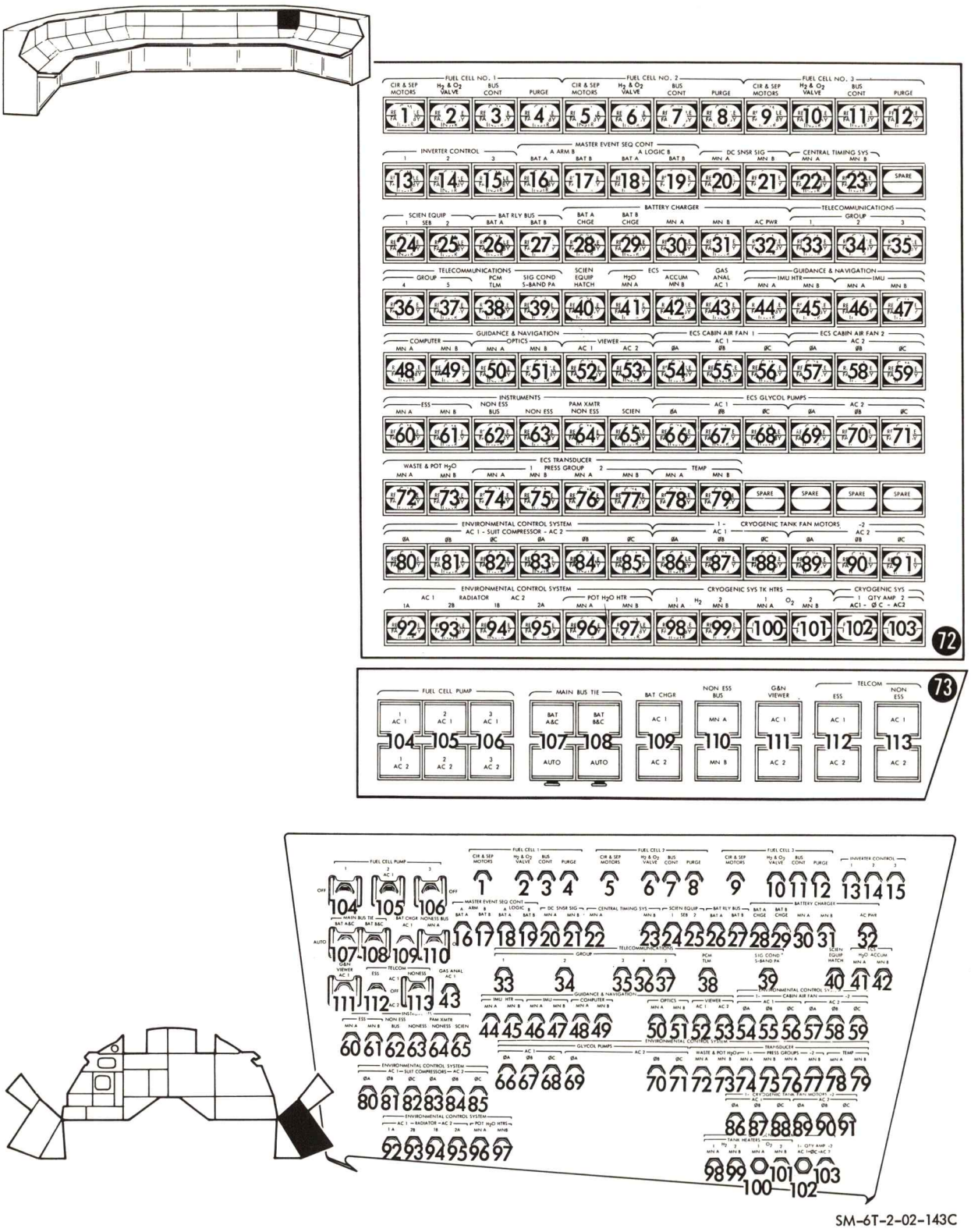

Figure 1-33. Circuit Breaker Panel No. 22

Table 1-26. Circuit Breaker Panel No. 22

Key	Nomenclature	Function	Instructor Visibility	Remarks
	FUEL CELL 1 circuit breakers			
1	CIR & SEP MOTORS	Applies power from a-c bus 1 or 2 to F/C 1 circulator and separator pump motors.	Repeater sw-lt	Depressing circuit breaker sw-lt trips associated cb in SCM and illuminates FAILED BY INSTRUCTOR portion of split-level indicator. Cb is not resetable until sw-lt is depressed second time, at which time CM RESETABLE portion of indicator illuminates.
2	H_2 & O_2 VALVE	Applies d-c power from battery relay bus to FUEL CELL 1 - REACTANTS sw.	Repeater sw-lt	
3	BUS CONT	Applies d-c power from battery relay bus to F/C 1 bus disconnect control through FUEL CELL 1 - MAIN BUS A and MAIN BUS B sw.	Repeater sw-lt	
4	PURGE	Applies power from d-c main bus A and B to F/C 1 purge valve through FUEL CELL 1 - O_2 PURGE H_2 PURGE sw.	Repeater sw-lt	
	FUEL CELL 2 circuit breakers			
5	CIR & SEP MOTORS	Applies power from a-c bus 1 or 2 to F/C 2 circulator and separator pump motors.	Repeater sw-lt	
6	H_2 & O_2 VALVE	Applies d-c power from battery relay bus to FUEL CELL 2 REACTANTS sw.	Repeater sw-lt	
7	BUS CONT	Applies d-c power from battery relay bus to F/C 2 bus disconnect control through FUEL CELL 2 MAIN BUS A and MAIN BUS B sw.	Repeater sw-lt	
8	PURGE	Applies power from d-c main bus A and B to F/C 2 purge valve control through FUEL CELL 2 - O_2 PURGE-H_2 PURGE sw.	Repeater sw-lt	
	FUEL CELL 3 circuit breakers			
9	CIR & SEP MOTORS	Applies power from a-c bus 1 or 2 to F/C 3 circulator and separator pump motors.	Repeater sw-lt	
10	H_2 & O_2 VALVE	Applies d-c power from battery relay bus to FUEL CELL 3-REACTANTS sw.	Repeater sw-lt	
11	BUS CONT	Applies d-c power from battery relay bus to F/C 3 bus disconnect control through FUEL CELL 3 - MAIN BUS A and MAIN BUS B sw.	Repeater sw-lt	

Table 1-26. Circuit Breaker Panel No. 22 (Cont)

Key	Nomenclature	Function	Instructor Visibility	Remarks
12	PURGE	Applies power from d-c main bus A and B to F/C 3 purge valve control through FUEL CELL 3 - O_2 PURGE - H_2 PURGE sw.	Repeater sw-lt	
	INVERTER CONTROL circuit breakers			
13	1	Applies d-c power from battery relay bus to AC INVERTER 1 and AC INVERTER 3 sw.	Repeater sw-lt	
14	2	Applies d-c power from battery relay bus to AC INVERTER 2 and AC INVERTER 1 sw.	Repeater sw-lt	
15	3	Applies d-c power from battery relay bus to AC INVERTER 2 and AC INVERTER 3 sw.	Repeater sw-lt	
	MASTER EVENT SEQ CONT circuit breakers			
16	A ARM B - BAT A	Applies d-c power from battery bus A to MASTER EVENT SEQ CONT - LOGIC sw.	Repeater sw-lt	
17	A ARM B - BAT B	Applies d-c power from battery bus B to MASTER EVENT SEQ CONT-LOGIC sw.	Repeater sw-lt	
18	A LOGIC B - BAT A	Applies d-c power from battery bus A to logic A bus in master event sequencer when MASTER EVENT SEQ CONT-LOGIC sw is in up position.	Repeater sw-lt	
19	A LOGIC B - BAT B	Applies d-c power from battery bus B to logic B bus in master event sequencer when MASTER EVENT SEQ CONT-LOGIC sw is in up position.	Repeater sw-lt	
	DC SNSR SIG circuit breakers			
20	MN A	Applies power from d-c main bus A to d-c undervoltage sensing unit and DC INDICATORS sw.	Repeater sw-lt	
21	MN B	Applies power from d-c main bus B to d-c undervoltage sensing unit and DC INDICATORS sw.	Repeater sw-lt	

Table 1-26. Circuit Breaker Panel No. 22 (Cont)

Key	Nomenclature	Function	Instructor Visibility	Remarks
	CENTRAL TIMING SYS circuit breakers			
22	MN A	Applies power from d-c main bus A to CTE power supply 1	Repeater sw-lt	
23	MN B	Applies power from d-c main bus B to CTE power supply 2	Repeater sw-lt	
	SCIEN EQUIP circuit breakers			
24	SEB-1	TBD	Repeater sw-lt	
25	SEB-2	TBD	Repeater sw-lt	
	BAT RLY BUS circuit breakers			
26	BAT A	Applies d-c power from battery bus A to battery relay bus through isolation diode.	Repeater sw-lt	
27	BAT B	Applies d-c power from battery bus B to battery relay bus through isolation diode.	Repeater sw-lt	
	BATTERY CHARGER circuit breakers			
28	BAT A CHGE	Applies power from battery bus A to MAIN BUS TIE - BAT A&C sw and to position A of BATTERY CHARGER sw through battery A bus tie motor sw contacts.	Repeater sw-lt	
29	BAT B CHGE	Applies power from battery bus B to MAIN BUS TIE - BAT B&C sw and to position B of BATTERY CHARGER sw through battery B bus tie motor sw contacts.	Repeater sw-lt	
30	MN A	Applies power from d-c main bus A to BATTERY CHARGER sw and d-c contacts of battery charger input power control relay.	Repeater sw-lt	
31	MN B	Applies power from d-c main bus B to BATTERY CHARGER sw and DC contacts of battery charger input power control relay.	Repeater sw-lt	
32	AC PWR	Applies power from a-c bus 1 or 2 to contacts of battery charger input power control relay.	Repeater sw-lt	

Table 1-26. Circuit Breaker Panel No. 22 (Cont)

Key	Nomenclature	Function	Instructor Visibility	Remarks
	TELECOMMUNICATIONS circuit breakers			
33	GROUP 1	Applies power from a-c bus 1 or 2 to DSE, VHF/FM transmitter, and C-band transponder.	Repeater sw-lt	
34	GROUP 2	Applies power from a-c bus 1 or 2 to USBE and PMP.	Repeater sw-lt	
35	GROUP 3	Applies power from flight and post-landing bus to engineer's audio center POWER sw, RECOVERY-VHF-BCN sw, and microphone amplifier in engineer's headset.	Repeater sw-lt	
36	GROUP 4	Applies power from flight and post-landing bus to the following: a. Commander's audio center POWER sw b. Audio center equipment keying relay c. RECOVERY-HF-ON/OFF sw d. VHF-AM-T/R-OFF-REC sw e. Microphone amplifier in commander's headset.	Repeater sw-lt	
37	GROUP 5	Applies power from flight and post-landing bus to the following: a. Navigator's audio center POWER sw b. TAPE RECORDER-FWD REV sw c. TAPE-RECORDER-RECORD-PLAY sw d. POWER-SCE sw e. POWER-PMP sw f. S-band-EMERG sw g. VHF-FM-ON-OFF sw h. S-BAND-PWR AMPL sw i. Microphone amplifier in navigator's headset	Repeater sw-lt	

Table 1-26. Circuit Breaker Panel No. 22 (Cont)

Key	Nomenclature	Function	Instructor Visibility	Remarks
		j. C-BAND - 1 PULSE - 2 PULSE sw k. S-BAND PA equipment l. TV equipment m. USBE power control relays n. UP-DATA sw and up-data link equipment o. VHF ANTENNA sw p. S-BAND ANTENNA sw through S-BAND XPONDER/XPONDER PWR AMPL sw.		
38	PCM-TLM	Applies power from a-c bus 1 or 2 to PCM telemetry equipment.	Repeater sw-lt	
39	SIG COND S-BAND PA	Applies power from a-c bus 1 or 2 to SCE and S-band PA.	Repeater sw-lt	
40	SCIEN EQUIP HATCH circuit breaker	TBD	Repeater sw-lt	
	ECS circuit breakers			
41	H_2O ACCUM-MN A	Applies power from d-c main bus A to H_2O ACCUM-AUTO/MAN/AUTO sw and H_2O accumulator pump failure detection unit.	Repeater sw-lt	
42	H_2O ACCUM-MN B	Applies power from d-c main bus B to H_2O ACCUM-AUTO/OFF/AUTO sw and H_2O accumulator pump failure detection unit.	Repeater sw-lt	
43	GAS ANAL - AC 1 circuit breaker	Applies a-c power to gas chromatograph package located in scientific data compartment.	Repeater sw-lt	
	GUIDANCE & NAVIGATION circuit breakers			
44	IMU HEATER - MN A	Applies power from d-c main bus A to IMU heaters.	Repeater sw-lt	
45	IMU HEATER - MN B	Applies power from d-c main bus B to IMU heaters.	Repeater sw-lt	
46	IMU - MN A	Applies power from d-c main bus A to IMU.	Repeater sw-lt	
47	IMU - MN B	Applies power from d-c main bus B to IMU.	Repeater sw-lt	
48	COMPUTER - MN A	Applies power from d-c main bus A to AGC.	Repeater sw-lt	

Table 1-26. Circuit Breaker Panel No. 22 (Cont)

Key	Nomenclature	Function	Instructor Visibility	Remarks
49	COMPUTER - MN B	Applies power from d-c main bus B to AGC.	Repeater sw-lt	
50	OPTICS - MN A	Applies power from d-c main bus A to optics.	Repeater sw-lt	
51	OPTICS - MN B	Applies power from d-c main bus B to optics.	Repeater sw-lt	
52	VIEWER - AC 1	None	Repeater sw-lt	Function deleted as a result of M&DV deactivation.
53	VIEWER - AC 2	None	Repeater sw-lt	
	ENVIRONMENTAL CONTROL SYSTEM - CABIN AIR FAN 1 and 2 circuit breakers			
54	AC 1 - ØA	Applies ØA power from a-c bus 1 to CABIN AIR FAN-1 sw and waste management blower sw	Repeater sw-lt	
55	AC 1 - ØB	Applies ØB power from a-c bus 1 to CABIN AIR FAN-1 sw and waste management blower sw	Repeater sw-lt	
56	AC 1 - ØC	Applies ØC power from a-c bus 1 to CABIN AIR FAN-1 sw and waste management blower sw	Repeater sw-lt	
57	AC 2 - ØA	Applies ØA power from a-c bus 2 to CABIN AIR FAN-2 sw.	Repeater sw-lt	
58	AC 2 - ØB	Applies ØB power from a-c bus 2 to CABIN AIR FAN-2 sw.	Repeater sw-lt	
59	AC 2 - ØC	Applies ØC power from a-c bus 2 to CABIN AIR FAN-2 sw and CABIN TEMP - AUTO/MAN sw.	Repeater sw-lt	
	INSTRUMENTS circuit breakers			
60	ESS - MN A	Applies power from d-c main bus A to ESSENTIAL 2 circuit breaker.	Repeater sw-lt	
61	ESS - MN B	Applies power from d-c main bus B to ESSENTIAL 2 circuit breaker.	Repeater sw-lt	
62	NON ESS BUS	Applies power from d-c main bus A and B to non-essential bus through NON ESS BUS sw.	Repeater sw-lt	
63	NON ESS	Applies power from non-essential bus to NON ESSENTIAL circuit breakers.	Repeater sw-lt	

Table 1-26. Circuit Breaker Panel No. 22 (Cont)

Key	Nomenclature	Function	Instructor Visibility	Remarks
64	PAM XMTR NON ESS	Applies power from non-essential bus to flight qualification recorder.	Repeater sw-lt	
65	SCIEN	TBD	Repeater sw-lt	
	ENVIRONMENTAL CONTROL SYSTEM - GLYCOL PUMPS circuit breakers			
66	AC 1 - ØA	Applies ØA power from a-c bus 1 to ECS GLYCOL PUMP sw and GLYCOL EVAP-TEMP IN sw.	Repeater sw-lt	
67	AC 1 - ØB	Applies ØB power from a-c bus 1 to ECS GLYCOL PUMP sw and SUIT EVAP sw.	Repeater sw-lt	
68	AC 1 - ØC	Applies ØC power from a-c bus 1 to ECS GLYCOL PUMP sw and GLYCOL EVAP - BACK PRESS - AUTO/MAN sw	Repeater sw-lt	
69	AC 2 - ØA	Applies ØA power from a-c bus 2 to ECS GLYCOL PUMP sw and GLYCOL EVAP - H_2O FLOW sw.	Repeater sw-lt	
70	AC 2 - ØB	Applies ØB power from a-c bus 2 to ECS GLYCOL PUMP sw	Repeater sw-lt	
71	AC 2 - ØC	Applies ØC power from a-c bus 2 to ECS GLYCOL PUMP sw	Repeater sw-lt	
	ENVIRONMENTAL CONTROL SYSTEM - TRANSDUCER circuit breakers			
72	WASTE & POT H_2O - MN A	Applies power from d-c main bus A to waste water tank and potable water tank pressure transducers.	Repeater sw-lt	
73	WASTE & POT H_2O - MN B	Applies power from d-c main bus B to waste water tank and potable water tank pressure transducers.	Repeater sw-lt	
74	PRESS GROUPS - 1 - MN A	Applies power from d-c main bus A to following pressure transducers: a. Suit b. Compressor Δ P c. Glycol discharge d. Glycol accumulator quantity e. Back pressure.	Repeater sw-lt	

Table 1-26. Circuit Breaker Panel No. 22 (Cont)

Key	Nomenclature	Function	Instructor Visibility	Remarks
75	PRESS GROUPS - 1 - MN B	Applies power from d-c main bus B to following pressure transducers: a. Suit b. Compressor Δ P c. Glycol discharge d. Glycol accumulator quantity e. Back pressure.	Repeater sw-lt	
76	PRESS GROUPS - 2 - MN A	Applies power from d-c main bus A to following pressure transducers: a. O_2 flow rate b. O_2 supply regulator outlet (TM only) c. Glycol evaporator steam d. Cabin e. CO_2 partial pressure.	Repeater sw-lt	
77	PRESS GROUPS - 2 - MN B	Applies power from d-c main bus B to following pressure transducers: a. O_2 flow rate b. O_2 supply regulator outlet (TM only) c. Glycol evaporator steam d. Cabin e. CO_2 partial pressure.	Repeater sw-lt	
78	TEMP - MN A	Applies power from d-c main bus A to following temperature transducers: a. Evaporator liquid outlet b. Cabin c. Suit d. Evaporator steam (TM only) e. Space radiator outlet.		
79	TEMP - MN B	Applies power from d-c main bus B to following temperature transducers. a. Evaporator liquid outlet	Repeater sw-lt	

Table 1-26. Circuit Breaker Panel No. 22 (Cont)

Key	Nomenclature	Function	Instructor Visibility	Remarks
		b. Cabin c. Suit d. Evaporator steam (T/M only) e. Space radiator outlet.		
	ENVIRONMENTAL CONTROL SYSTEM - SUIT COMPRESSOR circuit breakers			
80	AC 1 - ØA	Applies ØA power from a-c bus 1 to SUIT COMPRESSOR sw.	Repeater sw-lt	
81	AC 1 - ØB	Applies ØB power from a-c bus 1 to SUIT COMPRESSOR sw.	Repeater sw-lt	
82	AC 1 - ØC	Applies ØC power from a-c bus 1 to SUIT COMPRESSOR sw.	Repeater sw-lt	
83	AC 2 - ØA	Applies ØA power from a-c bus 2 to SUIT COMPRESSOR sw.	Repeater sw-lt	
84	AC 2 - ØB	Applies ØB power from a-c bus 2 to SUIT COMPRESSOR sw.	Repeater sw-lt	
85	AC 2 - ØC	Applies ØC power from a-c bus 2 to SUIT COMPRESSOR sw.	Repeater sw-lt	
	CRYOGENIC TANK FAN MOTORS 1 and 2 circuit breakers			
86	AC 1 - ØA	Applies ØA power from a-c bus 1 to H_2 FANS 1 and O_2 FANS 1 sw.	Repeater sw-lt	
87	AC 1 - ØB	Applies ØB power from a-c bus 1 to H_2 FANS 1 and O_2 FANS 1 sw.	Repeater sw-lt	
88	AC 1 - ØC	Applies ØC power from a-c bus 1 to H_2 FANS 1 and O_2 FANS 1 sw.	Repeater sw-lt	
89	AC 2 - ØA	Applies ØA power from a-c bus 2 to H_2 FANS 2 and O_2 FANS 2 sw.	Repeater sw-lt	
90	AC 2 - ØB	Applies ØB power from a-c bus 2 to H_2 FANS 2 and O_2 FANS 2 sw.	Repeater sw-lt	

Table 1-26. Circuit Breaker Panel No. 22 (Cont)

Key	Nomenclature	Function	Instructor Visibility	Remarks
91	AC 2 - ØC	Applies ØC power from a-c bus 2 to H_2 FANS 2 and O_2 FANS 2 sw.	Repeater sw-lt	
	ENVIRONMENTAL CONTROLS SYSTEM - RADIATOR circuit breakers			
92	AC 1 - 1A	Applies ØA power from a-c bus 1 to ECS RADIATOR 1A sw.	Repeater sw-lt	
93	AC 1 - 2B	Applies ØB power from a-c bus 1 to ECS RADIATOR 2B sw.	Repeater sw-lt	
94	AC 2 - 1B	Applies ØA power from a-c bus 2 to ECS RADIATOR 1B sw.	Repeater sw-lt	
95	AC 2 - 2A	Applies ØC power from a-c bus 2 to ECS RADIATOR 2A sw.	Repeater sw-lt	
96	POT H_2O HTR - MN A	Applies power from d-c main bus A to POT H_2O HEATER sw.	Repeater sw-lt	
97	POT H_2O HTR - MN B	Applies power from d-c main bus B to POT H_2O HTR sw.	Repeater sw-lt	
	CRYOGENIC SYSTEM TANK HEATERS circuit breakers			
98	H_2 - 1 - MN A	Applies power from d-c main bus A to H_2 HEATERS sw.	Repeater sw-lt	
99	H_2 - 2 - MN B	Applies power from d-c main bus B to H_2 HEATERS sw.	Repeater sw-lt	
100	O_2 - 1 - MN A	Applies power from d-c main bus A to O_2 HEATERS sw.	Repeater sw-lt	
101	O_2 - 2 - MN B	Applies power from d-c main bus B to O_2 HEATERS sw.	Repeater sw-lt	
	CRYOGENIC SYSTEM QTY AMPL 1 and 2 circuit breakers			
102	AC 1 - ØC	Applies power from a-c bus 1 to H_2 and O_2 1 tank signal conditioning boxes.	Repeater sw-lt	
103	AC 2 - ØC	Applies power from a-c bus 2 to H_2 and O_2 2 tank signal conditioning boxes.	Repeater sw-lt	

Table 1-26. Circuit Breaker Panel No. 22 (Cont)

Key	Nomenclature	Function	Instructor Visibility	Remarks
	FUEL CELL PUMP sw			
104	Sw 1			
	AC 1	Controls a-c power from a-c bus 1 to F/C 1 pump motors.	Repeater lt	
	OFF	Disconnects a-c power from F/C pump motors.		
	AC 2	Controls a-c power from a-c bus 2 to F/C 1 pump motors.	Repeater lt	
105	Sw 2			
	AC 1	Controls a-c power from a-c bus 1 to F/C 2 pump motors.	Repeater lt	
	OFF	Disconnects a-c power from F/C pump motors.		
	AC 2	Controls a-c power from a-c bus 2 to F/C 2 pump motor.	Repeater lt	
106	Sw 3			
	AC 1	Controls a-c power from a-c bus 1 to F/C 3 pump motors.	Repeater lt	
	OFF	Disconnects a-c power from F/C pump motors.		
	AC 2	Controls a-c power from a-c bus 2 to F/C 3 pump motor.	Repeater lt	
	MAIN BUS TIE sw			
107	BAT A&C/AUTO/OFF			
	BAT A&C	Controls battery bus A motor sw connecting battery bus A and battery C to d-c main bus A, and disconnects BATTERY CHARGER sw from battery bus A and battery C.	Repeater lt	
	AUTO	Controls battery bus A motor sw connecting battery bus A and PL battery C to d-c main bus A, and disconnecting BATTERY CHARGE sw during abort or normal CSM separation.	Repeater lt	
	OFF	Disconnects battery bus A and PL battery C from d-c main bus A, and connects BATTERY CHARGER sw to battery bus A and P/L battery C.		

Table 1-26. Circuit Breaker Panel No. 22 (Cont)

Key	Nomenclature	Function	Instructor Visibility	Remarks
108	BAT B&C/AUTO/OFF			
	BAT B&C	Controls battery bus B motor sw connecting battery bus B and PL battery C to d-c main bus B, and disconnects BATTERY CHARGER sw from battery bus B and PL battery C.	Repeater lt	
	AUTO	Controls battery bus B motor sw connecting battery bus B and PL battery C to d-c main bus B, and disconnects BATTERY CHARGER selection sw during abort or normal CSM separation.		
	OFF	Disconnects battery bus B and PL battery C from d-c main bus B, and connects BATTERY CHARGER sw to battery bus B and PL battery C.		
109	BAT CHGR sw			
	AC 1	Controls a-c power from a-c bus 1 to battery charger during charging operation.	Repeater lt	
	AC 2	Controls a-c power from a-c bus 2 to battery charger during charging operation.	Repeater lt	
110	NON ESS BUS sw			
	MN A	Connects nonessential bus to d-c main bus A.	Repeater lt	
	OFF	Disconnects nonessential bus from d-c main buses.		
	MN B	Connects nonessential bus to d-c main bus B.	Repeater lt	
111	G&N VIEWER sw			
	AC 1	None	Repeater lt	Function deleted as a result of M&DV deactivation.
	AC 2	None	Repeater lt	
	TELECOM sw			
112	ESS			
	AC 1	Applies power from a-c bus 1 to GROUP 2 and SIG COND S-BAND PA.	Repeater lt	
	OFF	Disconnects power from GROUP 2 and SIG COND S-BAND PA circuit breaker.		

Table 1-26. Circuit Breaker Panel No. 22 (Cont)

Key	Nomenclature	Function	Instructor Visibility	Remarks
	AC 2	Applies power from a-c bus 2 to GROUP 2 and SIG COND S-BAND PA circuit breakers.	Repeater lt	
113	NON ESS			
	AC 1	Applies power from a-c bus 1 to GROUP 1 and PCM/TLM circuit breaker.	Repeater lt	
	OFF	Disconnects power from GROUP 1 and PCM/TLM circuit breakers.		
	AC 2	Applies power from a-c bus 2 to GROUP 1 and PCM/TLM circuit breakers.	Repeater lt	

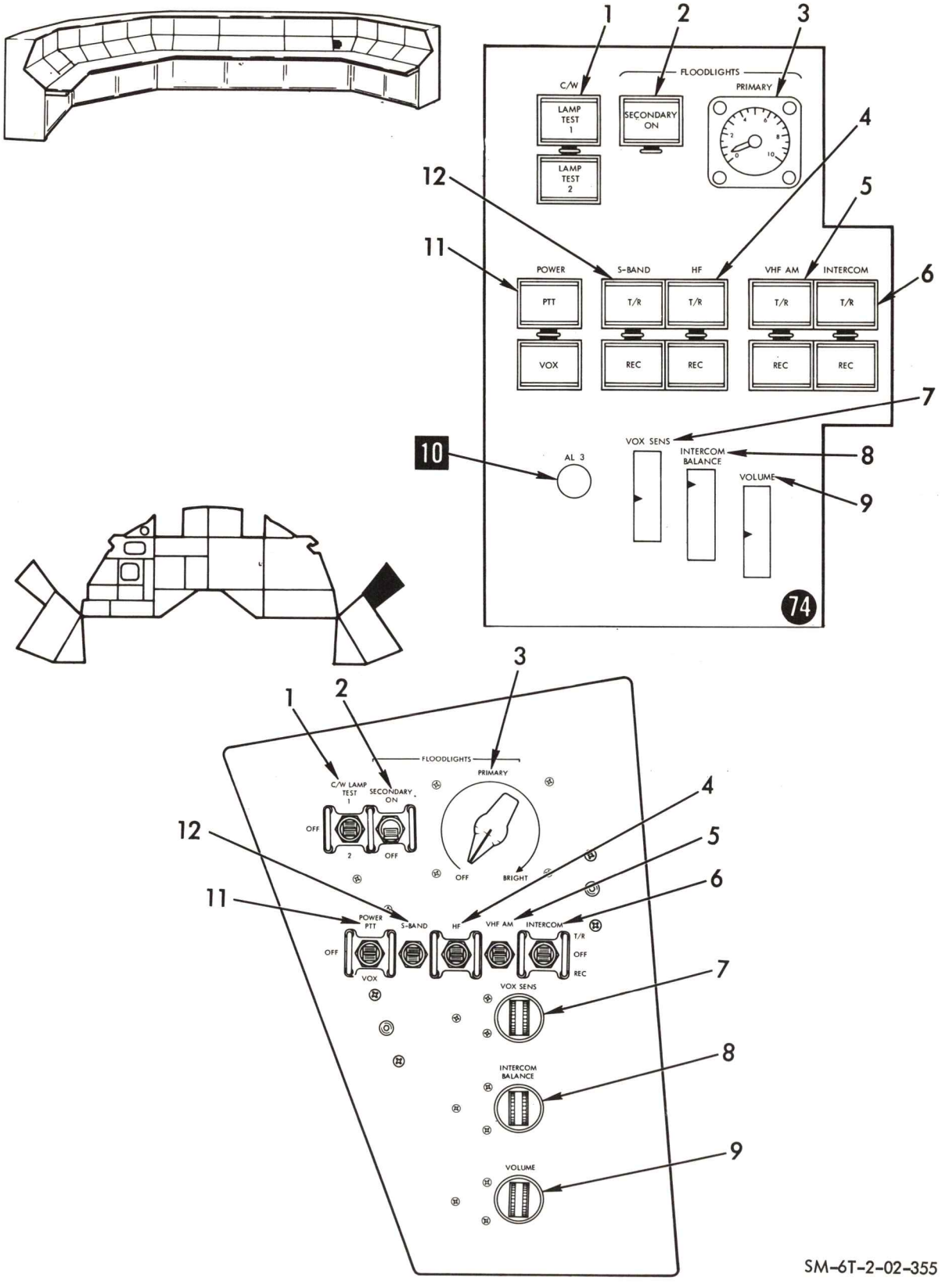

Figure 1-34. Spacecraft Panel No. 23

1.3.1.22 S/C Panel No. 23.

Figure 1-34 illustrates the SCM equivalent of S/C panel No. 23, the right hand audio and lighting control panel, and its associated IOS repeater panel. The controls on this panel are associated with the caution and warning system, the communication and instrumentation system simulation, and lighting controls.

Table 1-27 defines the function and instructor visibility to the setting of each of the controls.

Table 1-27. S/C Panel No. 23

Key	Nomenclature	Function	Instructor Visibility	Remarks
1	C/W LAMP TEST sw			
	1	Illuminates system status lt on panel No. 10 for lamp test.	Repeater lt	MASTER ALARM AND MASTER WARNING lt illuminate during lamp test. In addition, audio tone is sent to each headset.
	OFF	Extinguishes system status lt during lamp test; normal operating position.		
	2	Illuminates system status lt on panel No. 11 for lamp test.	Repeater lt	
	FLOODLIGHTS controls			
2	SECONDARY sw			
	ON	Illuminates secondary right-hand floodlights.	Repeater lt	
	OFF	Removes power from secondary floodlights.		
3	PRIMARY rheostat	Controls intensity of right-hand primary floodlights.	Repeater indicator	
4	HF sw			
	T/R	Enables astronaut 3 to transmit and receive over HF transceiver when operating in AM or SSB mode.	Repeater lt	
	OFF	Removes power from HF channel of audio center.		
	REC	Enables astronaut 3 to receive only over HF transceiver.	Repeater lt	
5	VHF-AM sw			
	T/R	Enables astronaut 3 to transmit and receive over VHF-AM transmitter-receiver.	Repeater lt	
	OFF	Removes power from VHF-AM channel of audio center.		
	REC	Enables astronaut 3 to receive only over VHF-AM transmitter-receiver.	Repeater lt	
6	INTERCOM sw			
	T/R	Enables astronaut 3 to transmit and receive over intercom system.	Repeater lt	
	OFF	Removes audio center from intercom system.		

Table 1-27. S/C Panel No. 23 (Cont)

Key	Nomenclature	Function	Instructor Visibility	Remarks
	REC	Enables astronaut 3 to receive only over intercom system.	Repeater lt	
7	VOX SENS thumbwheel control	Adjust sensitivity of voice-operated relay in audio center module.	Repeater indicator	
8	INTERCOM BALANCE thumbwheel control	Adjusts level of intercom signal in relation to incoming RF signals.	Repeater indicator	
9	VOLUME thumbwheel control	Increases or decreases audio signal level to earphones.	Repeater indicator	
10	AL 3 lt (IOS only)	Indicates astronaut loop 3 is in use.		Operates in conjunction with console communication system AL talk-listen keys.
11	POWER sw			
	PTT	Applies power to audio center module.	Repeater lt	
	OFF	Removes power from audio center module.		VOX is disabled.
12	S-BAND sw			
	T/R	Enables astronaut 3 to transmit and receive over S-band equipment when operating in voice mode.	Repeater lt	
	OFF	Remove audio input from the S-band section of audio center.		
	REC	Enables astronaut 3 to receive only from S-band equipment when operating in voice mode.	Repeater lt	

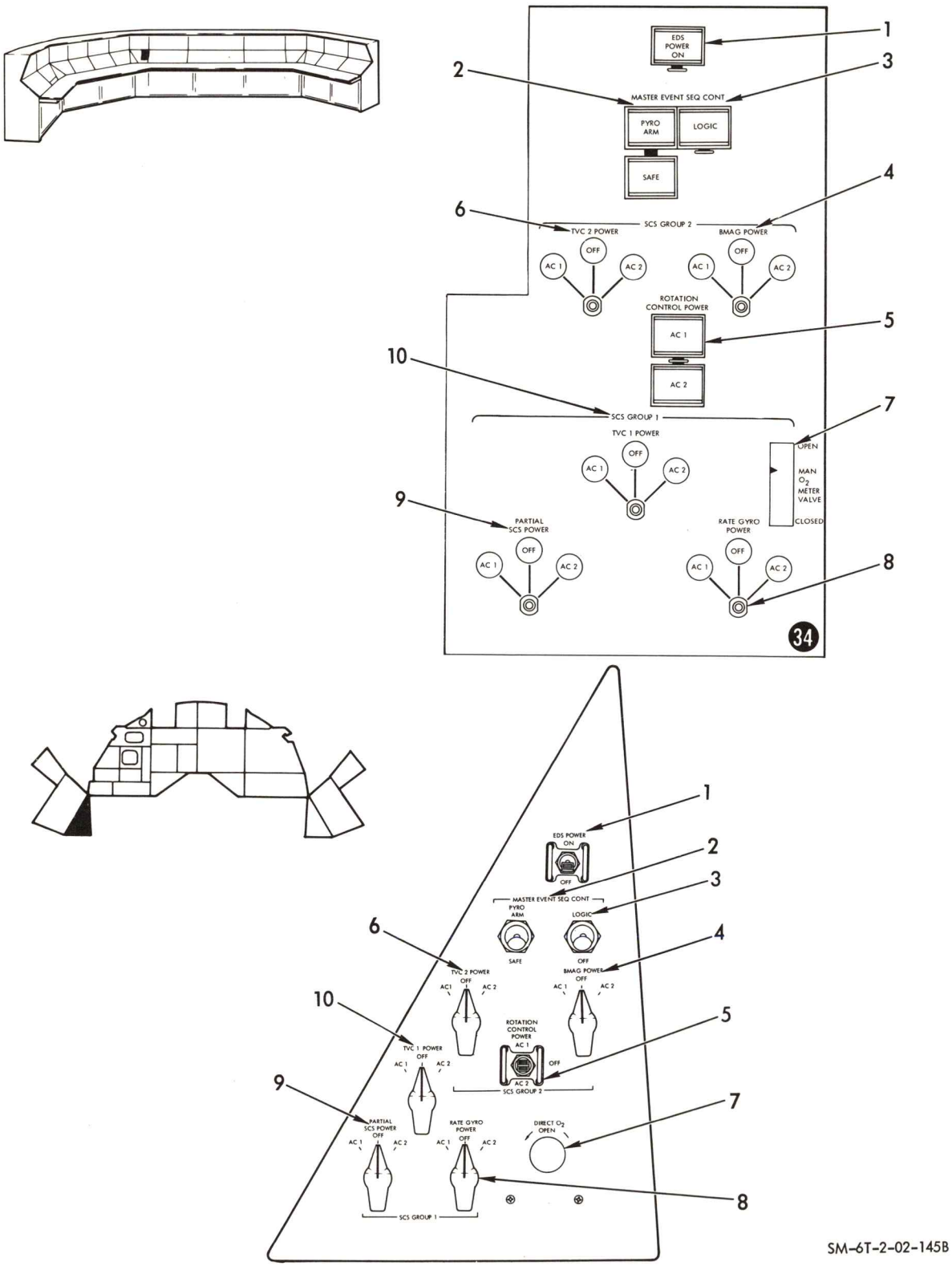

Figure 1-35. Spacecraft Panel No. 24

1.3.1.23 S/C Panel No. 24.

Figure 1-35 illustrates the SCM equivalent of S/C panel No. 24 and its associated IOS repeater panel. The controls on this panel are associated with the sequence control groups, the stabilization and control system, and the environmental control system simulation.

Table 1-28 defines the function and instructor visibility to the setting of each of the controls.

Table 1-28. S/C Panel No. 24

Key	Nomenclature	Function	Instructor Visibility	Remarks
1	EDS POWER sw			
	ON	Applies battery power to EDS buses 1, 2, and 3, and to EDS display circuitry.	Repeater lt	
	OFF	Removes power from EDS buses and display circuitry.		
	MASTER EVENT SEQ CONT sw			
2	PYRO sw			
	ARM	Controls d-c power to master event sequence controller from pyro batteries A and B.	Repeater lt	
	SAFE	Removes power from pyro bus in master event sequence controller.	Repeater lt	
3	LOGIC/OFF sw			
	LOGIC	Connects entry batteries A and B to logic buses A and B in master event sequence controller.	Repeater lt	
	OFF	Removes power from logic buses in MESC.		
	SCS GROUP 2 sw			
4	BMAG POWER sw			
	AC_1	Applies power from a-c bus 1 and d-c main bus A to display attitude gyro accelerometer assembly (AGAA) ECA, pitch, yaw, and roll ECAs, attitude gyro spin motors.	Repeater lt	
	OFF	Removes a-c and d-c power supplied by AC_1 and AC_2 position.	Repeater lt	
	AC_2	Applies power from a-c bus 2 and d-c main bus B to display AGAA, pitch, roll, yaw, and auxiliary ECAs.	Repeater lt	
5	ROTATION CONTROL POWER sw			
	AC_1	Applies power from a-c bus 1 to rotation controllers and roll ECA.	Repeater lt	Switch has no effect on direct mode operation of rotation controllers.
	OFF	Disconnects power from rotation controllers and roll ECA.		
	AC_2	Applies power from a-c bus 2 to rotation controller and roll ECA.	Repeater lt	

Table 1-28. S/C Panel No. 24 (Cont)

Key	Nomenclature	Function	Instructor Visibility	Remarks
6	TVC 2 POWER sw			
	AC_1	Applies power from a-c bus 1 to yaw and pitch ECAs.	Repeater lt	
	OFF	Disconnects power from yaw and pitch ECAs.	Repeater lt	
	AC_2	Applies power from a-c bus 2 to pitch and yaw ECAs.	Repeater lt	
7	DIRECT O_2 valve	Manual metering valve controlling flow of oxygen into suit circuit.	Repeater indicator. Indicator also repeated on IOS panel No. 49.	
8	SCS GROUP 1 sw			
	RATE GYRO POWER sw			
	AC_1	Applies power from a-c bus 1 to rate gyro assembly.	Repeater lt	
	OFF	Disconnects power from rate gyro assembly.	Repeater lt	
	AC_2	Applies power from a-c bus 2 to rate gyro assembly.	Repeater lt	
9	PARTIAL SCS POWER sw			
	AC_1	Applies power from a-c bus 1 and d-c main bus A to display AGAA, pitch, roll, yaw, and auxiliary ECAs.	Repeater lt	
	OFF	Removes power from units supplied by AC_1 and AC_2 positions.	Repeater lt	
	AC_2	Applies power from a-c bus 2 and d-c main bus B to display AGAA, pitch, roll, yaw, and auxiliary ECAs.	Repeater lt	
10	TVC 1 POWER sw			
	AC_1	Applies power from a-c bus 1 and d-c main bus A to pitch, yaw, and display AGAA ECAs.	Repeater lt	
	OFF	Removes power from unit supplied by AC_1 and AC_2 positions.	Repeater lt	
	AC_2	Applies power from a-c bus 2 and d-c main bus B to pitch, yaw, and display AGAA ECAs.	Repeater lt	

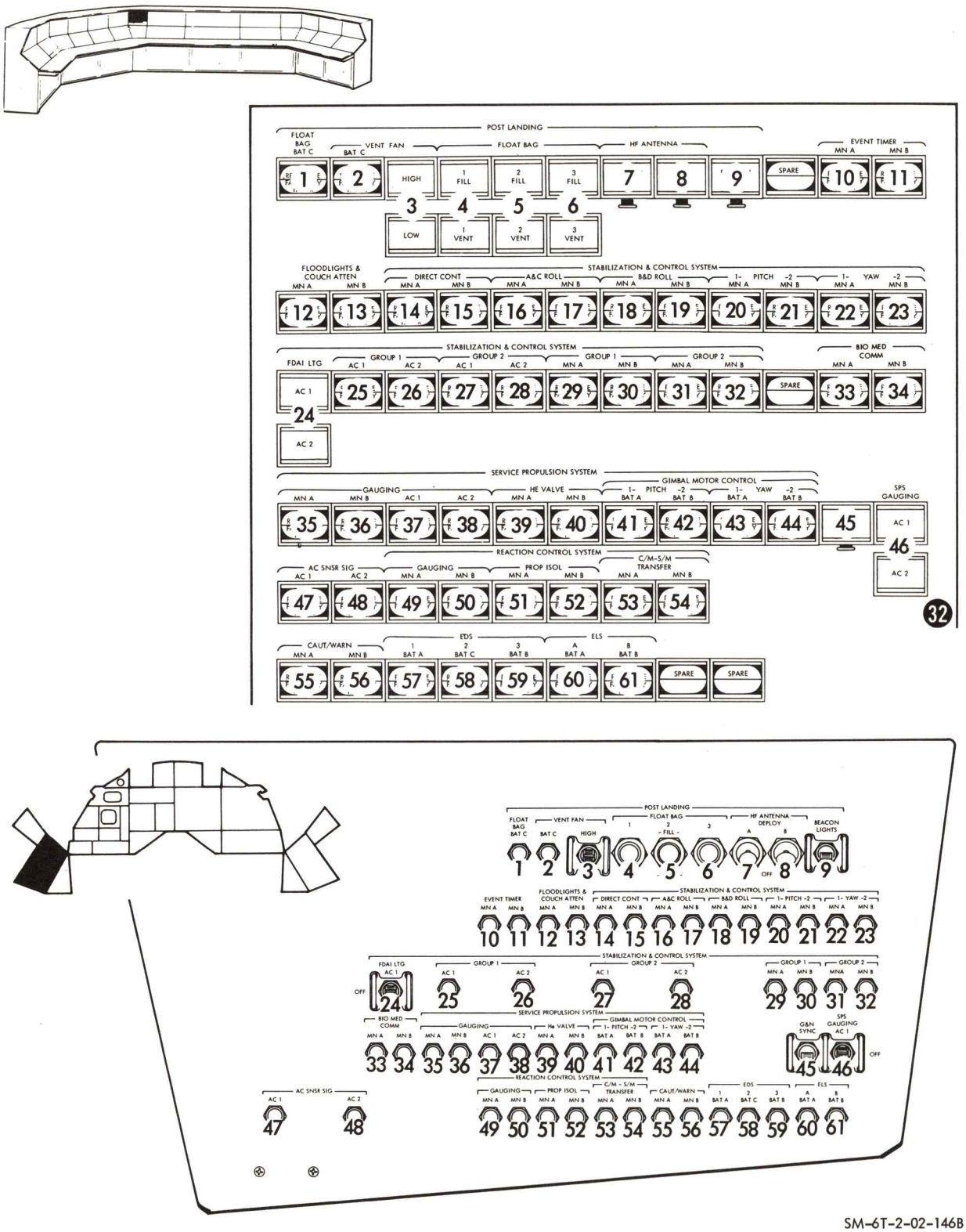

Figure 1-36. Spacecraft Panel No. 25

1.3.1.24 S/C Panel No. 25.

Figure 1-36 illustrates the SCM equivalent of S/C panel No. 25 and its associated IOS repeater panel. The controls on this panel are associated with the sequence control group, the environmental control system, the communication and instrumentation, service propulsion system, guidance and navigation, reaction control system, and caution and warning simulation.

Table 1-29 defines the function and instructor visibility to the setting of each of the controls.

Table 1-29. S/C Panel No. 25

Key	Nomenclature	Function	Instructor Visibility	Remarks
	POSTLANDING			
1	FLOAT BAG BAT C circuit breaker	Applies d-c power from flight and postlanding bus to FLOAT BAG FILL sw 1, 2, and 3.	Repeater sw-lt	Depressing circuit breaker sw-lt trips associated circuit breaker in C/M and illuminates FAILED BY INSTRUCTOR portion of split-level indicator. Circuit breaker is not resetable until sw-lt is depressed second time, at which time, CM RESETABLE portion of split-level indicator illuminates.
2	VENT FAN-BAT C circuit breaker	Applies d-c power from flight and postlanding bus to VENT FAN-HIGH/LOW sw.	Repeater sw-lt	
3	VENT FAN - HIGH/LOW sw			
	HIGH	Opens cabin inlet and outlet vent valves and activates cabin vent fan to high-speed flow operation.	Repeater lt	
	(Center)	Closes cabin inlet and outlet vent valves and removes power from cabin vent fan.		
	LOW	Opens cabin inlet and outlet vent valves and activates cabin vent fan to low-speed flow operation.	Repeater lt	
4	FLOAT BAG 1 sw			
	FILL	Starts compressor which inflates float bag 1.	Repeater lt	
	(Center)	Neutral (off) position.		
	VENT	Disconnects power from compressor and opens vent line to flotation bag.	Repeater lt	
5	FLOAT BAG 2 sw			
	FILL	Starts compressor which inflates float bag 2.	Repeater lt	
	(Center)	Neutral (off) position.		
	VENT	Disconnects power from compressor and opens vent line to flotation bag.	Repeater lt	
6	FLOAT BAG 3 sw			
	FILL	Starts compressor which inflates float bag 3.	Repeater lt	
	(Center)	Neutral (off) position.		
	VENT	Disconnects power from compressor and opens vent line to flotation bag.	Repeater lt	

Table 1-29. S/C Panel No. 25 (Cont)

Key	Nomenclature	Function	Instructor Visibility	Remarks
7	HF ANTENNA DEPLOY A sw			
	(Up)	Applies power to ANTENNA-DEPLOY/OFF sw.	Repeater lt	
	OFF	Removes power from ANTENNA-DEPLOY/OFF sw.		
8	HF ANTENNA DEPLOY B sw			
	(Up)	Deploys HF whip antenna.	Repeater lt	Switch armed through up position of HF ANTENNA DEPLOY A sw.
	OFF	Normal operational position.		
9	BEACON LIGHTS/OFF sw			
	BEACON LIGHTS	Turns on beacon lights.	Repeater lt	
	OFF	Turns off beacon lights.		
10	EVENT TIMER MN A circuit breaker	Applies power from d-c main bus A to event timer sw.	Repeater sw-lt	
11	EVENT TIMER MN B circuit breaker	Applies power from d-c main bus B to event timer sw.	Repeater sw-lt	
12	FLOODLIGHTS & COUCH ATTEN MN A circuit breaker	Applies power from d-c main bus B to floodlight control panels, LEB panel, and COUCH UNLOCK sw.	Repeater sw-lt	
13	FLOODLIGHTS & COUCH ATTEN MN B circuit breaker	Applies power from d-c main bus B to floodlight control panels, LEB, and COUCH UNLOCK sw.	Repeater sw-lt	
	STABILIZATION & CONTROL SYSTEM			
	DIRECT CONT circuit breakers			
14	MN A	Applies power from d-c main bus A to DIRECT MODE sw and DELTA V display.	Repeater sw-lt	
15	MN B	Applies power from d-c main bus B to DIRECT MODE sw and DELTA V display.	Repeater sw-lt	
	A&C ROLL circuit breakers			
16	MN A	Applies power from d-c main bus A to A&C ROLL channel sw.	Repeater sw-lt	

Table 1-29. S/C Panel No. 25 (Cont)

Key	Nomenclature	Function	Instructor Visibility	Remarks
17	MN B	Applies power from d-c main bus B to A&C ROLL channel sw.	Repeater sw-lt	
	B&D ROLL circuit breakers			
18	MN A	Applies power from d-c main bus A to B&D ROLL channel sw.	Repeater sw-lt	
19	MN B	Applies power from d-c main bus B to B&D ROLL channel sw.	Repeater sw-lt	
	PITCH 1-2 circuit breakers			
20	MN A	Applies power from d-c main bus A to PITCH channel sw.	Repeater sw-lt	
21	MN B	Applies power from d-c main bus B to PITCH channel sw.	Repeater sw-lt	
	YAW 1-2 circuit breakers			
22	MN A	Applies power from d-c main bus A to YAW channel sw.	Repeater sw-lt	
23	MN B	Applies power from d-c main bus B to YAW channel sw.	Repeater sw-lt	
24	FDAI LTG sw			
	AC 1	Applies ØB power from a-c bus 1 to FDAI BRIGHTNESS control.	Repeater lt	
	OFF	Removes power from FDAI BRIGHTNESS control.		
	AC 2	Applies ØB power from a-c bus 2 to FDAI BRIGHTNESS control.	Repeater lt	
	GROUP 1 circuit breakers			
25	AC 1	Applies power from a-c bus 1 to SCS POWER, RATE GYRO POWER, and TVC 1 POWER sw.	Repeater sw-lt	
26	AC 2	Applies power from a-c bus 2 to SCS POWER, RATE GYRO POWER, and TVC 1 POWER sw.	Repeater sw-lt	

Table 1-29. S/C Panel No. 25 (Cont)

Key	Nomenclature	Function	Instructor Visibility	Remarks
	GROUP 2 circuit breakers			
27	AC 1	Applies power from a-c bus 1 to BMAG POWER, ROTATION CONTROL POWER, and TVC 2 POWER sw.	Repeater sw-lt	
28	AC 2	Applies power from a-c bus 2 to BMAG POWER, ROTATION CONTROL POWER, and TVC 2 POWER sw.	Repeater sw-lt	
	GROUP 1 circuit breakers			
29	MN A	Applies power from d-c main bus A to SCS POWER, TVC 1 POWER, SCS sw, and to translation control prior to C/M-S/M separation.	Repeater sw-lt	
30	MN B	Applies power from d-c main bus B to SCS POWER, TVC 1 POWER, SCS sw, and to translation control prior to C/M-S/M separation.	Repeater sw-lt	
	GROUP 2 circuit breakers			
31	MN A	Applies power from d-c main bus A to BMAG POWER sw, and to astronaut 1 rotation and translation control.	Repeater sw-lt	
32	MN B	Applies power from d-c main bus B to TVC 2 POWER sw, and to astronaut 2 rotation and translation control.	Repeater sw-lt	
	BIO-MED COMM circuit breakers			
33	MN A	TBD	Repeater sw-lt	
34	MN B	Applies power from d-c main bus B to TLM INPUTS-BIO-MED sw.	Repeater sw-lt	
	SERVICE PROPULSION SYSTEM			
	GAUGING circuit breakers			
35	MN A	Applies power from d-c main bus A to propellant utilization and gaging subsystem power supplies.	Repeater sw-lt	

Table 1-29. S/C Panel No. 25 (Cont)

Key	Nomenclature	Function	Instructor Visibility	Remarks
36	MN B	Applies power from d-c main bus B to propellant utilization and gaging subsystem power supplies.	Repeater sw-lt	
37	AC 1	Applies power from a-c bus 1 to AC 1 contacts of SPS GAUGING sw.	Repeater sw-lt	
38	AC 2	Applies power from a-c bus 2 to AC 2 contacts of SPS GAUGING sw.	Repeater sw-lt	
	He VALVE circuit breakers			
39	MN A	Applies power from d-c main bus A to left-hand SPS HELIUM and INJECT PRE-VALVES sw.	Repeater sw-lt	
40	MN B	Applies power from d-c main bus B to right-hand SPS HELIUM and INJECT PRE-VALVES sw.	Repeater sw-lt	
	GIMBAL MOTOR CONTROL-1-PITCH-2 circuit breakers			
41	BAT A	Applies power from battery bus A to SPS GIMBAL MOTORS-PITCH 1 sw.	Repeater sw-lt	
42	BAT B	Applies power from battery bus B to SPS GIMBAL MOTORS-PITCH 2 sw.	Repeater sw-lt	
	1-YAW-2 circuit breakers			
43	BAT A	Applies power from battery bus A to SPS GIMBAL MOTORS -YAW 1 sw.	Repeater sw-lt	
44	BAT B	Applies power from battery bus B to SPS GIMBAL MOTORS - YAW 2 sw.	Repeater sw-lt	
45	G&N SYNC/OFF sw			
	G&N SYNC	Provides manual maneuver capability in G&N attitude control mode by permitting detent sw in rotation controls to place CDUs in follow mode.	Repeater lt	
	OFF	Disconnects manual maneuver capability in G&N attitude control mode.		

Table 1-29. S/C Panel No. 25 (Cont)

Key	Nomenclature	Function	Instructor Visibility	Remarks
46	SPS GAUGING sw			
	AC 1	Applies power from a-c bus 1 to quantity gaging system self-test unit and SPS firing control relay contacts.	Repeater lt	
	OFF	Removes all power applied by AC 1 or 2 sw positions.		
	AC 2	Applies power from a-c bus 2 to quantity gaging system self-test unit and SPS firing control relay contacts.	Repeater lt	
	AC SNSR SIG circuit breakers			
47	AC 1	Applies power from a-c bus 1 to over-undervoltage and overload sensing unit, and to AC INDICATORS sw.	Repeater sw-lt	
48	AC 2	Applies power from a-c bus 2 to over-undervoltage and overload sensing unit, and to AC INDICATORS sw.	Repeater sw-lt	
	REACTION CONTROL SYSTEM			
	GAUGING circuit breakers			
49	MN A	Applies power from d-c main bus A to S/M propellant quantity gaging computer.	Repeater sw-lt	
50	MN B	Applies power from d-c main bus B to S/M propellant quantity gaging computer.	Repeater sw-lt	
	PROP ISOL circuit breakers			
51	MN A	Applies power from d-c main bus A to mission sequencer, and RCS propellant and helium valve sw.	Repeater sw-lt	
52	MN B	Applies power from d-c main bus B to mission sequencer, and RCS propellant and helium valve sw.	Repeater sw-lt	

Table 1-29. S/C Panel No. 25 (Cont)

Key	Nomenclature	Function	Instructor Visibility	Remarks
	C/M-S/M TRANSFER circuit breakers			
53	MN A	Applies power from d-c main bus A to RCS TRANSFER sw and C/M PROPELLANT JETT-LOGIC sw.	Repeater sw-lt	
54	MN B	Applies power from d-c main bus B to RCS TRANSFER sw and C/M PROPELLANT JETT-LOGIC sw.	Repeater sw-lt	
	CAUT/WARN circuit breakers			
55	MN A	Applies power from d-c main bus A to caution and warning system.	Repeater sw-lt	
56	MN B	Applies power from d-c main bus B to caution and warning system.	Repeater sw-lt	
	EDS circuit breakers			
57	1 BAT A	Applies power from battery bus A to EDS POWER sw.	Repeater sw-lt	
58	2 BAT C	Applies power from entry battery C to EDS POWER sw.	Repeater sw-lt	
59	3 BAT B	Applies power from battery bus B to EDS POWER sw.	Repeater sw-lt	
	ELS circuit breakers			
60	A BAT A	Applies power from battery bus A to ELS LOGIC sw.	Repeater sw-lt	
61	B BAT B	Applies power from battery bus B to ELS LOGIC sw.	Repeater sw-lt	

1.3.1.25 S/C Panel No. 26.

Figure 1-37 illustrates the SCM equivalent of S/C panel No. 26 and its associated IOS repeater panel. The controls on this panel are associated with the communication and instrumentation simulation and lighting controls.

Table 1-30 defines the function and instructor visibility to the setting of each of the controls.

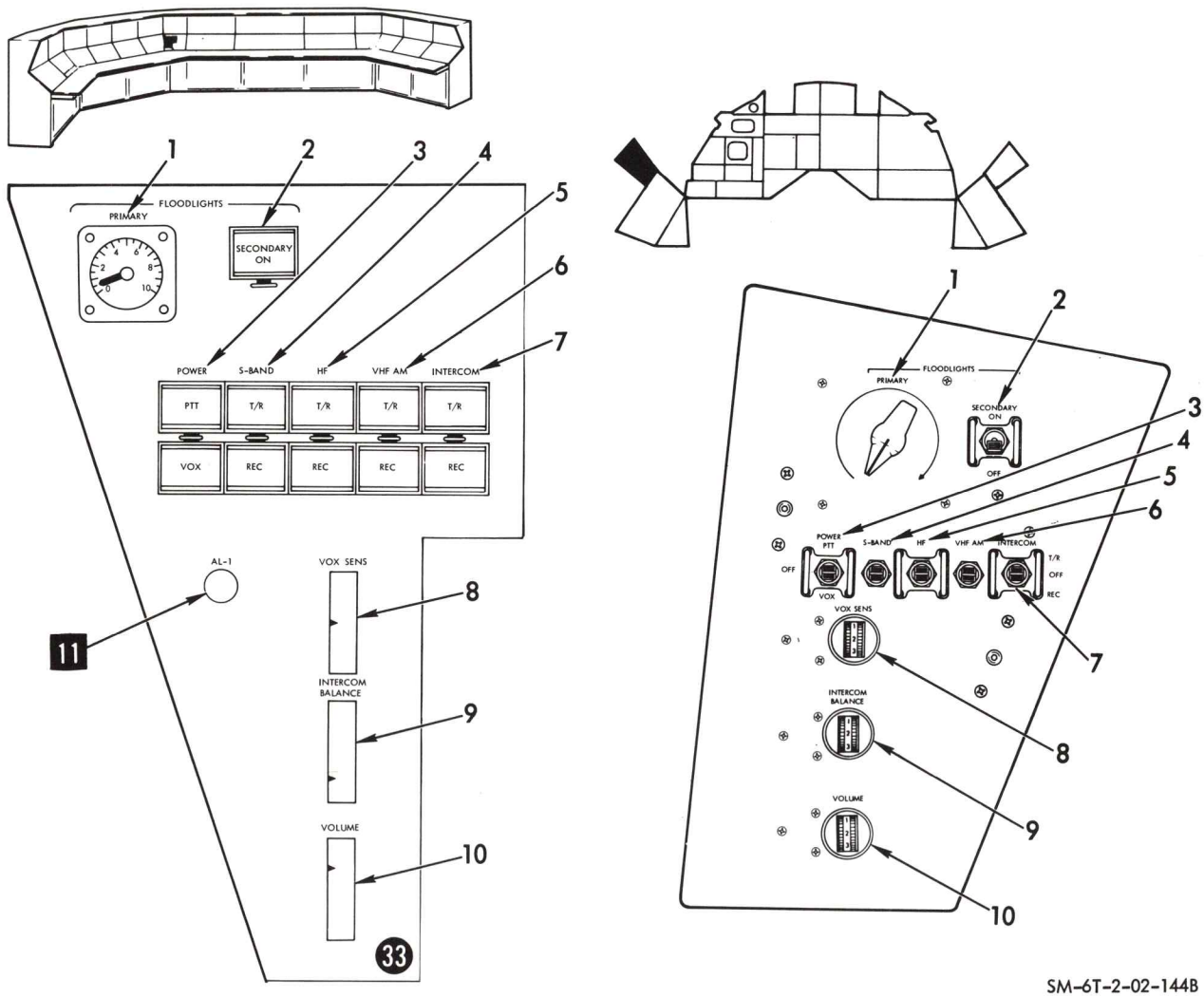

Figure 1-37. LH Audio and Lighting Control Panel (Spacecraft Panel No. 26)

Table 1-30. LH Audio and Lighting Control Panel (S/C Panel No. 26)

Key	Nomenclature	Function	Instructor Visibility	Remarks
	FLOODLIGHTS controls			
1	PRIMARY rheostat	Controls intensity of left-hand primary floodlights.	Repeater indicator	
2	SECONDARY sw			
	ON	Illuminates left-hand secondary floodlights.	Repeater lt	
	OFF	Removes power from secondary floodlights.		
3	POWER sw			
	PTT	Applies power to audio center module.	Repeater lt	
	OFF	Removes power from audio center module.		VOX is disabled.
	VOX	Applies power to audio center module and enables VOX circuitry.	Repeater lt	
4	S-BAND sw			
	T/R	Enables astronaut 1 to transmit and receive over S-band equipment when operating in voice mode.	Repeater lt	
	OFF	Removes audio input from S-band of audio center.		
	REC	Enables astronaut 1 to receive only from S-band equipment when operating in voice mode.	Repeater lt	
5	HF sw			
	T/R	Enables astronaut 1 to transmit and receive over HF transceiver when operating in AM or SSB mode.	Repeater lt	
	OFF	Removes power from HF channel of audio center.		
	REC	Enables astronaut 1 to receive only over HF transceiver.	Repeater lt	
6	VHF-AM sw			
	T/R	Enables astronaut 1 to transmit and receiver over VHF-AM transmitter-receiver.	Repeater lt	
	OFF	Removes power from VHF-AM channel of audio center.		

Table 1-30. LH Audio and Lighting Control Panel (S/C Panel No. 26) (Cont)

Key	Nomenclature	Function	Instructor Visibility	Remarks
	REC	Enables astronaut 1 to receive only over VHF-AM transmitter-receiver.	Repeater lt	
7	INTERCOM sw			
	T/R	Enables astronaut 1 to transmit and receiver over intercom system.	Repeater lt	
	OFF	Removes audio center from intercom system.		
	REC	Enables astronaut 1 to receive only over intercom system.	Repeater lt	
8	VOX SENS thumbwheel control	Adjust sensitivity of voice-operated relay in audio center module.	Repeater indicator	
9	INTERCOM BALANCE thumbwheel control	Adjust level of intercom signal in relation to incoming RF signals.	Repeater indicator	
10	VOLUME thumbwheel control	Increases or decreases audio signal level to earphones.	Repeater indicator	
11	AL-1 lt (IOS only)	Indicates astronaut loop 1 is in use.		Operates in conjunction with console communication system AL talk-listen keys.

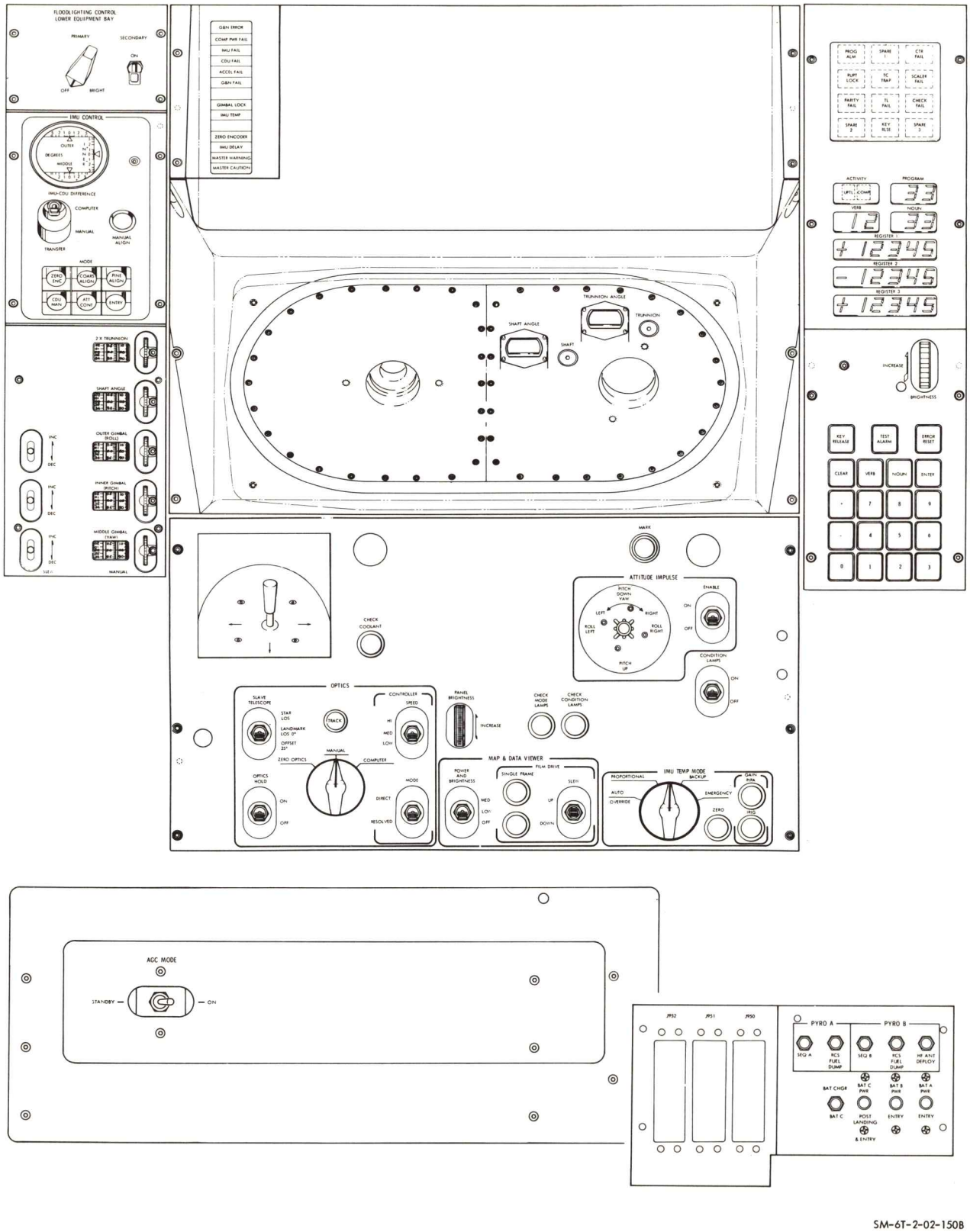

SM-6T-2-02-150B

Figure 1-38. Lower Equipment Bay (SCM)

1.3.2 LOWER EQUIPMENT BAY (SCM-IOS).

Figure 1-38 illustrates the SCM equivalent of the spacecraft lower equipment bay panels. Figures 1-39 through 1-70 and tables 1-31 through 1-61 illustrate the individual SCM panels and include the IOS panel area where status of each SCM-LEB panel is manifested. Numerical indexing of the figures correlates them with corresponding tables identifying each LEB control and display by name, explaining its function, and describing the manner of IOS manifestation. A single number code (per panel) is used for both the SCM and the IOS illustrations. Where a given SCM control or display does not have an IOS equivalent, the identifying number on the SCM panel illustration is indicated with a white numeral on a black circle. Where a control or display located on the IOS does not have an SCM counterpart, the identifying number on the IOS panel illustration is indicated by a white numeral on a black square.

1.3.2.1 G&N Annunciator Panel.

Figure 1-39 illustrates the SCM equivalent of the S/C G&N annunciator panel and its associated IOS repeater panel. The displays on this panel are associated with the guidance and navigation system simulation.

Table 1-31 defines the function and instructor visibility to the status of each of the displays.

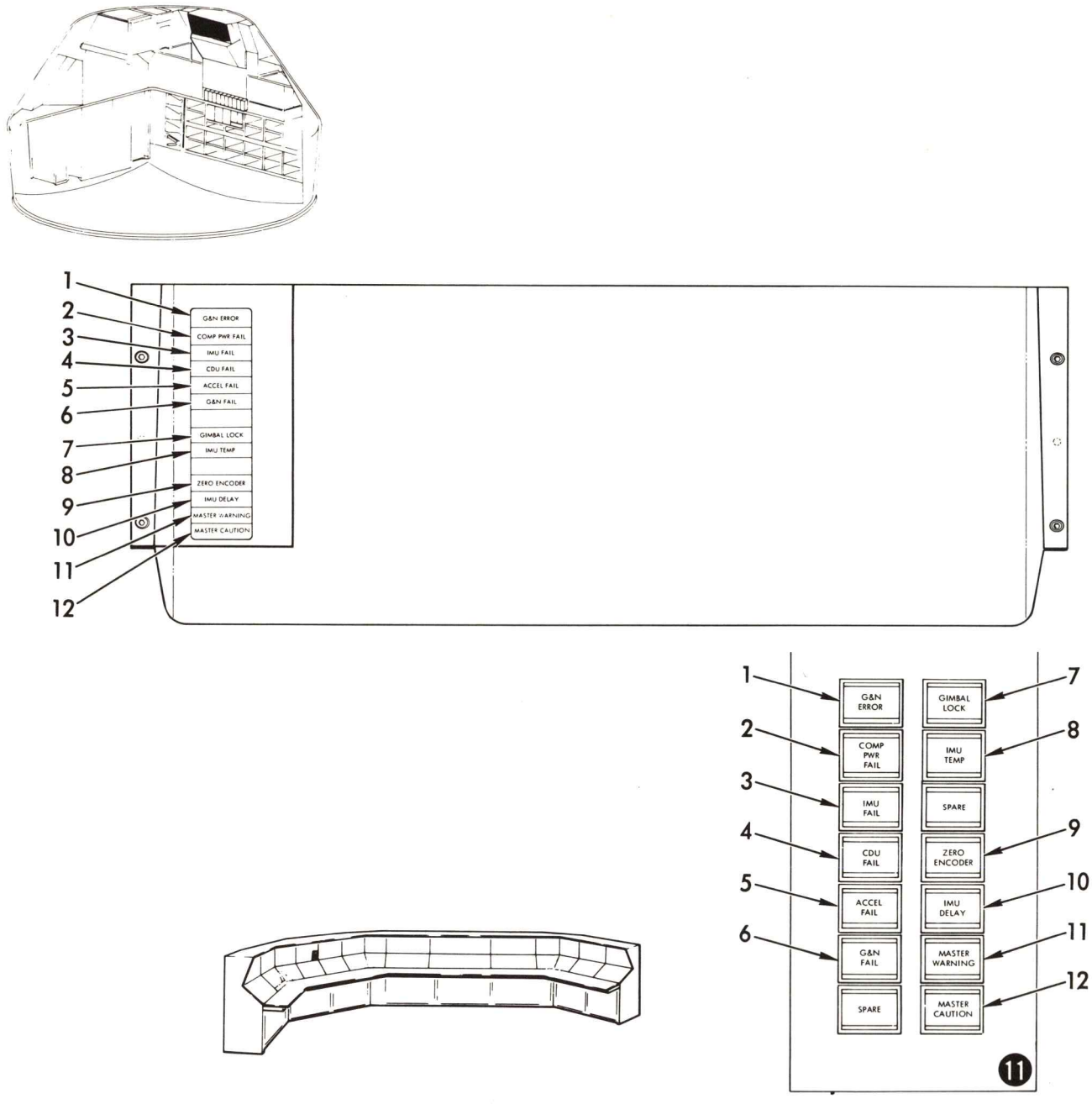

Figure 1-39. G&N Annunciator (Spacecraft Panel No. 57)

Table 1-31. G&N Annunciator Panel (S/C Panel No. 57)

Key	Nomenclature	Function	Instructor Visibility	Remarks
1	G&N ERROR lt	Indicates failure in AGC, IMU, accelerometer loops, or CDU.	Repeater lt	Light repeated on panel No. 10.
2	COMP PWR FAIL lt	Indicates loss of -10-, -3- or +28-volt d-c power in AGC.	Repeater lt	Repeater lt on panel No. 10 (AGC PWR FAIL).
3	IMU FAIL lt	Indicates gimbal servo error failure, loss of 3200 cps power supply, gyro wheel power, resolver or tachometer excitation, or -28-volt d-c IMU power.	Repeater lt	Repeater lt on panel No. 10.
4	CDU FAIL lt	Indicates loss of 25.6 kc power, CDU gimbal error failure, or loss of motor excitation in one or more CDUs.	Repeater lt	Repeater lt on panel No. 10.
5	ACCEL FAIL lt	Indicates 120-volt d-c power loss or accelerometer error failure in one or more accelerometers.	Repeater lt	Repeater lt on panel No. 10 (G&N ACCEL FAIL).
6	G&N FAIL lt	Indicates failure in G&N system.	Repeater lt	
7	GIMBAL LOCK lt	Indicates middle gimbal angle greater than ±60 degrees with respect to outer gimbal.	Repeater lt	Repeater lt on panel No. 10 (GMBL LOCK).
8	IMU TEMP lt	Indicates IMU temperature has deviated 5 degrees from normal.	Repeater lt	Repeater lt on panel No. 10
9	ZERO ENCODER lt	Indicates CDU encoders are being zeroed.	Repeater lt	Light extinguishes after CDUs are zeroed (illuminates for approximately 30 seconds).
10	IMU DELAY lt	Indicates IMU gyro warm-up time.	Repeater lt	Lamp extinguishes approximately 40 seconds after IMU turn-on.
11	MASTER WARNING lt	Indicates malfunction or out-of-tolerance condition exists as indicated by system status lt.	Repeater lt	Upon illumination of MASTER WARNING lt, MASTER ALARM lt are illuminated and audio tone is sent to each headset. MASTER WARNING lt can only be reset by depressing either MASTER ALARM sw-lt on panels No. 3 or No. 18.
12	MASTER CAUTION lt	None	Repeater lt	Deactivated.

1.3.2.2 Optics Panel.

Figure 1-40 illustrates the SCM equivalent of the spacecraft's optics panel. The optics panel consists of the optical eyepieces and fittings for the simulated telescope and sextant and the means for manual positioning of the instruments. The readouts from the optics panel are repeated on IOS panel 15. (See figure 1-42.)

Table 1-32 defines the function and instructor visibility to the setting of the controls of the panel.

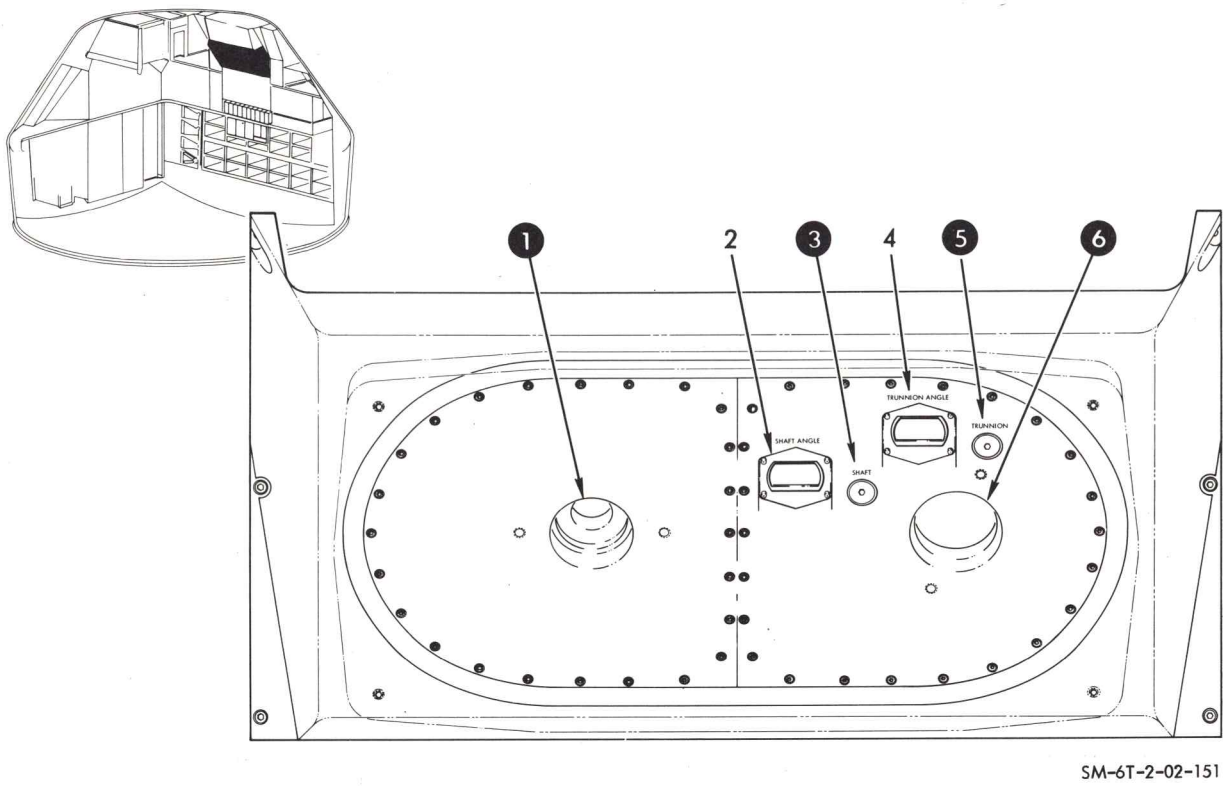

Figure 1-40. Optics Panel (Spacecraft Panel No. 30)

Table 1-32. Optics Panel (S/C Panel No. 30)

Key	Nomenclature	Function	Instructor Visibility	Remarks
1	SEXTANT	Sextant eyepiece fitting for observing position of target with respect to line of sight.		
2	SHAFT ANGLE display	Provides mechanical read-out of SCT shaft angle that is commanded by crew or computer.	Repeater display	Repeater displays for digital read-outs are located on IOS panel No. 15.
3	SHAFT control	Enables crew to manually position shaft angles.		
4	TRUNNION ANGLE display	Provides mechanical readout of SCT trunnion angle that is commanded by crew or computer.	Repeater display	Repeater displays for digital read-outs are located on IOS panel No. 15.
5	TRUNNION control	Enables crew to manually position trunnion angles.		
6	SCANNING TELESCOPE	Fitting for SCT that is used to assist crew in obtaining proper target identification for sextant.		

1.3.2.3 LEB Floodlight Panel.

Figure 1-41 illustrates the SCM equivalent of the S/C lower equipment bay floodlight panel and its associated IOS repeater panel.

Table 1-33 defines the function of, and instructor visibility to, the setting of the controls on the panel.

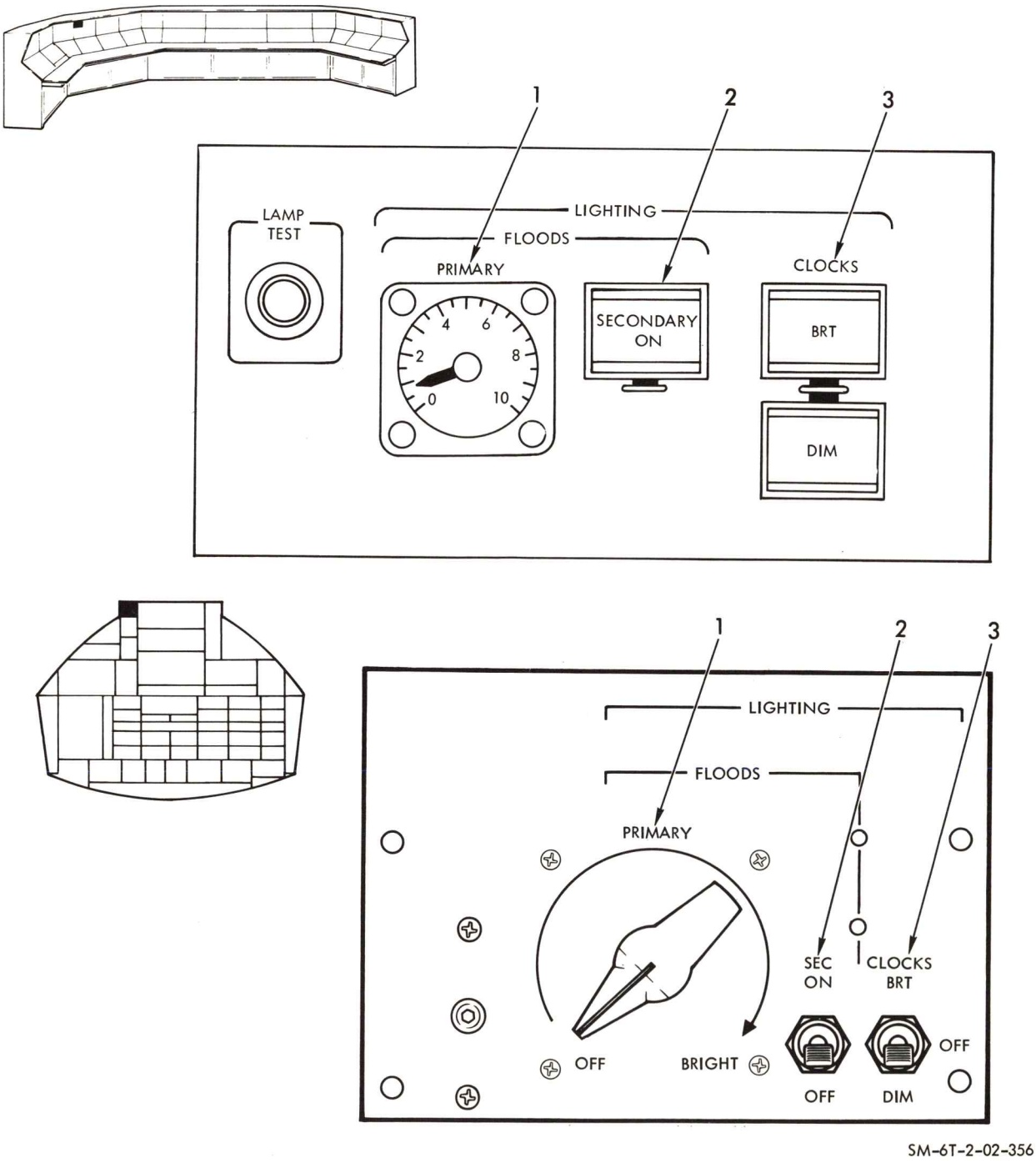

Figure 1-41. LEB Floodlight Panel

Table 1-33. LEB Floodlight Panel (S/C Panel No. 81)

Key	Nomenclature	Function	Instructor Visibility	Remarks
	LIGHTING			
	FLOODS			
1	PRIMARY rheostat	Controls intensity of LEB floodlights.	Repeater indicator	
2	SEC sw			
	ON	Illuminates secondary LEB floodlights.	Repeater lt	
	OFF	Removes power from LEB floodlights.		
3	CLOCKS sw			
	BRT	Applies power for bright intensity of GMT and event timer clocks.	Repeater lt	
	OFF	Removes power for lighting of GMT and event timer clocks.		
	DIM	Applies power for dim intensity of GMT and event timer clocks.	Repeater lt	

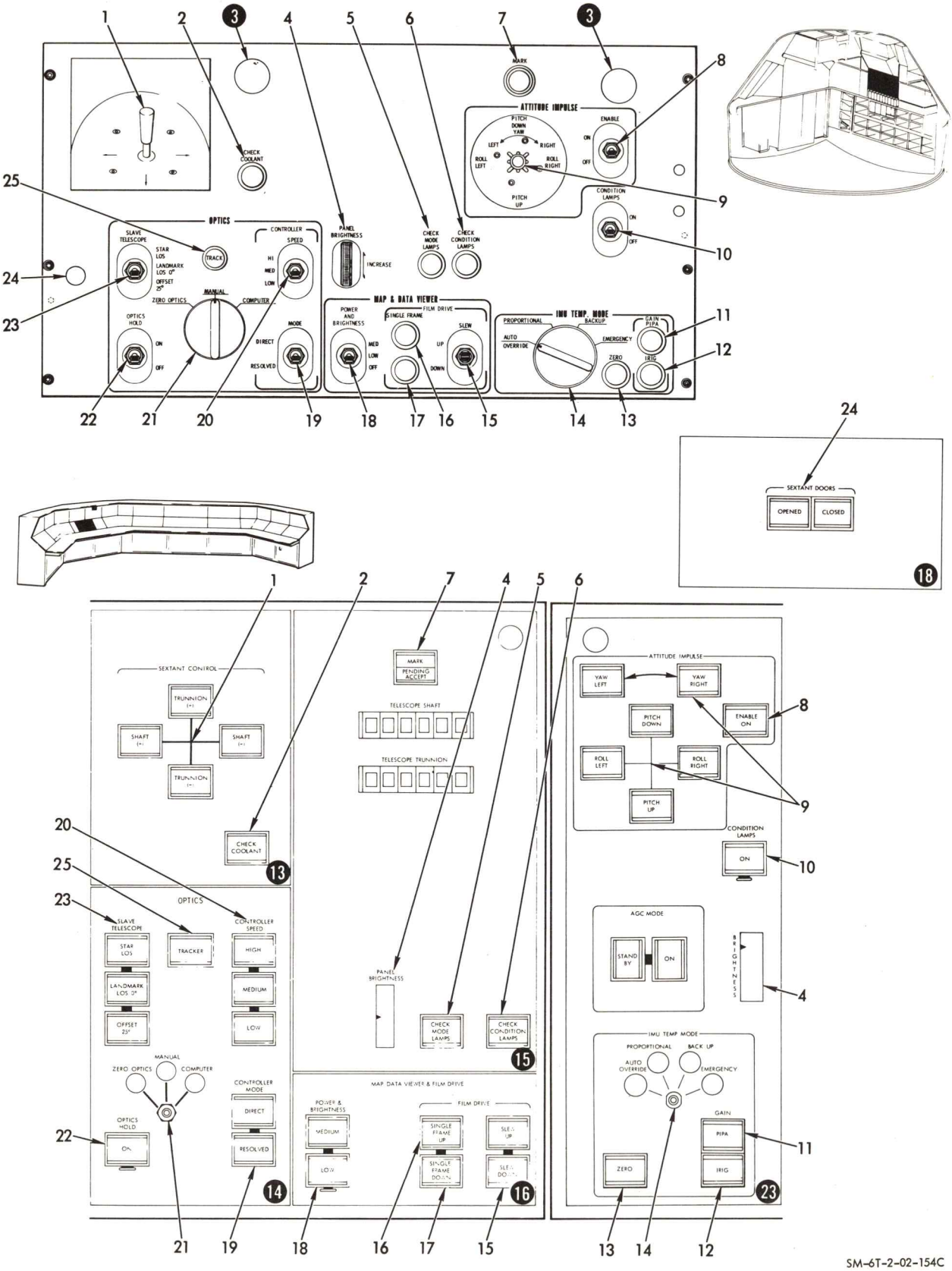

Figure 1-42. LEB G&N Panel

1.3.2.4 LEB G&N Panel.

Figure 1-42 illustrates the SCM equivalent of the S/C optics control panel and its associated IOS repeater panels. The controls on this panel are associated with the guidance and navigation system simulation.

Table 1-34 defines the function and instructor visibility to the setting of each of the controls of the panel.

Table 1-34. LEB G&N Panel

Key	Nomenclature	Function	Instructor Visibility	Remarks
1	OPTICS hand controller	Provides electrical commands from crew to optics shaft and trunnion axes.	Repeater lt	
2	CHECK COOLANT sw	When depressed, applies power to floodlamps behind lower panel enabling crew to view condition of IMU coolant supply system.	Repeater lt	
3	CHECK COOLANT windows (two - C/M only)	Permits observation of IMU coolant supply system couplings for purpose of detecting leaks.		
4	PANEL BRIGHTNESS thumbwheel control	Provides adjustment of illumination level of all integrally lighted G&N system controls and displays.	Repeater indicator	
5	CHECK MODE LAMPS sw	When depressed, applies power to all mode lt on IMU control panel.	Repeater lt	
6	CHECK CONDITION LAMPS sw	When depressed, applies power to all condition lt on G&N annunciator panel.	Repeater lt	
7	MARK sw	When depressed, supplies an interrupt signal to AGC which commands it to read optics angles, time, and if the IMU is operating the IMU gimbal angles.	Repeater split-level lt. MARK lt provides indication that MARK sw has been depressed. PENDING ACCEPT lt illuminates when computer has registered mark information.	
	ATTITUDE IMPULSE			
8	ENABLE sw			
	ON	Supplies signal to G&N and SCS systems which disables active S/C attitude control mode allowing S/C to drift freely, and enables the attitude impulse controller.	Repeater lt	
	OFF	Disables the attitude impulse controller.		
9	ATTITUDE IMPULSE controller	Stick controller used to apply small impulses to spacecraft by means of service module reaction jets.	Repeater lt	

Table 1-34. LEB G&N Panel (Cont)

Key	Nomenclature	Function	Instructor Visibility	Remarks
10	CONDITION LAMPS sw			
	ON	Applies d-c power to G&N condition lt.	Repeater lt	
	OFF	Removes d-c power from lt.		
	IMU TEMP MODE			
	GAIN sw			
11	PIPA	When depressed, simulates temperature error 5°F above normal operating temperature to test temperature alarm circuitry.	Repeater lt	Depressing either sw should illuminate IMU TEMP indicator on G&N annunciator panel.
12	IRIG	When depressed, simulates temperature error 5°F below normal operating temperature to test temperature alarm circuitry.	Repeater lt	
13	ZERO sw	When depressed, replaces IRIG and PIPA thermistors with standard operating resistances for purpose of calibrating temperature monitoring devices.	Repeater lt	
14	IMU TEMP MODE rotary sw			
	AUTO OVERRIDE	Normal operating mode which enables automatic switch-over to emergency mode if IMU temperature exceeds limits.	Repeater lt	IMU TEMP lt illuminates if temperature exceeds limits.
	PROPORTIONAL	This mode utilizes same heater control circuit as AUTO OVERRIDE mode but does not provide for automatic switch-over to emergency mode if temperature exceeds limits.	Repeater lt	IMU TEMP lt illuminates if temperature exceeds limits.
	BACKUP	In this mode, temperature control is furnished by temperature indicating circuits.	Repeater lt	IMU TEMP lt illuminates when heaters are off and extinguishes when heaters are on.
	EMERGENCY	This mode controls IRIG temperature to 135±3°F by means of emergency heaters and thermostat.	Repeater lt.	
	MAP & DATA VIEWER			
15	SLEW sw			All map and data viewer functions have been deleted as a result of map and data viewer deactivation.
	UP	Slews film forward.	Repeater lt	
	DOWN	Slews film backward.	Repeater lt	

Table 1-34. LEB G&N Panel (Cont)

Key	Nomenclature	Function	Instructor Visibility	Remarks
	SINGLE FRAME sw			
16	UP	Slews film one frame upward.	Repeater lt	
17	DOWN	Slews film one frame downward.		
	POWER & BRIGHTNESS			
18	MED	Applies power to M&DV drive electronics and projection bulb.	Repeater lt	
	LOW	Applies power to M&DV drive electronics and projection bulb.	Repeater lt	
	OFF	Removes power from M&DV viewer.		
	OPTICS			
19	MODE sw			Switch is used in conjunction with MANUAL position of OPTICS rotary sw.
	DIRECT	Applies control stick drive rates directly to integrating loops to position CDUs.	Repeater lt	
	RESOLVED	Control stick drive rates are resolved by drive rate and shaft gain resolution circuits before positioning CDUs.	Repeater lt	
20	CONTROLLER-SPEED sw	Provides attenuation of shaft and trunnion slew commands from optics hand controller to following maximum drive rates.		
		DIRECT MODE / RESOLVED MODE		
	HI	8.56°/SEC / 17.1°/SEC	Repeater lt	
	MED	1.0°/SEC / 1.0°/SEC	Repeater lt	
	LOW	0.1°/SEC / 0.1°/SEC	Repeater lt	
21	OPTICS rotary sw			
	ZERO OPTICS	Applies reference signal into integrating loop to drive CDU resolvers and optics to zero.	Repeater lt	
	MANUAL	Normal operating position which allows crew to position optics by means of optics hand controller.	Repeater lt	Crew selects either DIRECT or RESOLVED position of OPTICS MODE sw.

Table 1-34. LEB G&N Panel (Cont)

Key	Nomenclature	Function	Instructor Visibility	Remarks
	COMPUTER	Optics are automatically positioned by AGC; panel controls are disconnected from optics.	Repeater lt	
22	OPTICS HOLD sw			
	ON	Freezes optics trunnion axis to prevent position overshoot following repositioning of trunnion axis with optics hand controller.	Repeater lt	
	OFF	Releases optics trunnion axis for repositioning with optics hand controller.		
23	SLAVE TELESCOPE sw			
	STAR LOS	Sextant and telescope are slaved to each other.	Repeater lt	
	LANDMARK LOS 0°	Drives telescope trunnion repeater to zero independently of trunnion CDU.	Repeater lt	
	OFFSET 25°	Telescope trunnion is driven to 25° offset from shaft axis.	Repeater lt	
24	Sextant doors access	Provides access to drive mechanism which opens optics window with use of universal tool.	SEXTANT DOORS - OPENED, CLOSED lt	
25	TRACK sw	Switches trunnion and shaft slew command from optics to photometer circuitry.	Repeater lt	Not functional.

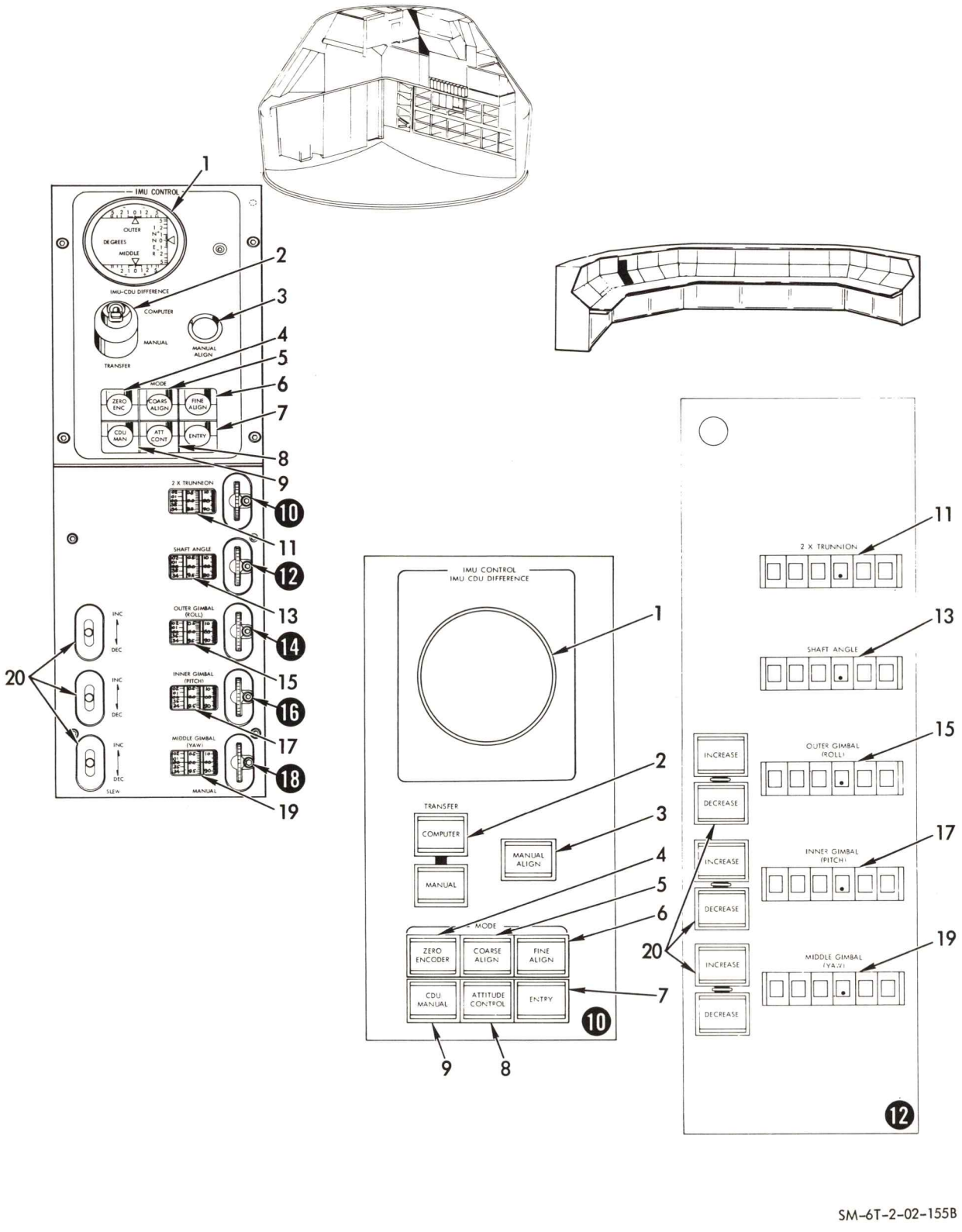

Figure 1-43. IMU/CDU Control Panel

1.3.2.5 IMU/CDU Control Panel.

Figure 1-43 illustrates the SCM equivalent of the S/C IMU/CDU control panel and its associated IOS repeater panels. The controls and displays on this panel are associated with the guidance and navigation system simulation.

Table 1-35 defines the function and instructor visibility to the status of each of the controls and displays.

Table 1-35. IMU/CDU Control Panel

Key	Nomenclature	Function	Instructor Visibility	Remarks
	IMU CONTROL			
1	IMU-CDU DIFFERENCE indicator	Displays difference in degrees between actual IMU gimbal angles and CDU shaft angles.	Repeater indicator	
2	TRANSFER sw			
	COMPUTER	Allows AGC selection of IMU operating modes by driving mode relays directly.	Repeater lt	
	MANUAL	Allows manual selection of IMU operating modes through use of MODE sw.	Repeater lt	
3	MANUAL ALIGN sw	Causes IMU gimbals to be aligned to manually inserted CDU angles in manual CDU mode.	Repeater lt	Used in conjunction with CDU MAN mode P/B to coarse align IMU gimbals and cage IMU gyros.
	MODE sw			
4	ZERO ENC	Selects and displays zero encoder mode of IMU operation. Mode sets shafts and encoders of CDUs and CDU registers in computer to zero.	ZERO ENCODER repeater lt	
5	COARS ALIGN	Selects and displays coarse align mode of IMU operation. Mode positions IMU stable member so CDU and IMU gimbal angles are approximately same.	COARSE ALIGN repeater lt	
6	FINE ALIGN	Selects and displays fine align mode of IMU operation. In this mode, AGC brings IMU stable member to fine alignment by torquing gyros to reposition stable member. CDUs are also driven to repeat gimbal angles.	Repeater lt	
7	ENTRY	Selects and displays entry mode of IMU operation. Mode similar to attitude control mode except roll rate capability is increased by a factor of 16.	Repeater lt	
8	ATT CONT	Selects and displays attitude control mode of IMU operation. Mode generates attitude error signals to be used by SCS to control spacecraft attitude.	ATTITUDE CONTROL repeater lt	Attitude error signals represent difference between IMU gimbal angles and CDU angles.

Table 1-35. IMU/CDU Control Panel (Cont)

Key	Nomenclature	Function	Instructor Visibility	Remarks
9	CDU MAN	Selects and displays manual CDU mode of IMU operation. Mode provides backup capability for manually positioning CDUs for manual alignment of IMU in conjunction with MANUAL ALIGN sw. Mode also used in conjunction with G&N SYNC sw to hold an attitude following manual maneuver in G&N attitude control mode of SCS.	CDU MANUAL repeater lt	
10	MANUAL thumbwheel control	Provides mechanical drive to trunnion CDU motor shafts for fine positioning of resolvers within CDU.	(C/M only)	Manual controls not repeated at IOS. Instructor is aware of trainee operation by variations occurring in digital readouts.
11	2X TRUNNION angle readout display	Provides visual representation of optics trunnion angle commanded by computer or crew.	Repeater display	
12	MANUAL thumbwheel	Provides mechanical drive to shaft CDU motor shafts for fine positioning of resolvers within CDU.	(C/M only)	Same as 10.
13	SHAFT ANGLE readout display	Provides visual representation of optics shaft angle commanded by computer or crew.	Repeater display	
14	MANUAL thumbwheel	Provides mechanical drive to outer gimbal CDU for fine positioning of resolvers within CDU.	(C/M only)	Same as 10.
15	OUTER GIMBAL (ROLL) readout display	Provides visual representation of IMU outer gimbal angle commanded by computer or crew.	Repeater display	
16	MANUAL thumbwheel control	Provides mechanical drive to inner gimbal CDU for fine positioning of resolvers within CDU.	(C/M only)	Same as 10.
17	INNER GIMBAL (PITCH)	Provides visual representation of IMU inner gimbal angle commanded by computer or crew.	Repeater display	
18	MANUAL thumbwheel	Provides mechanical drive for middle gimbal CDU for fine positioning of resolvers within CDU.	(C/M only)	Same as 10.
19	MIDDLE GIMBAL (YAW) readout display	Provides visual representation of IMU middle gimbal angle commanded by computer or crew.	Repeater display	
20	SLEW sw	Supplies proper voltages to inertial CDUs to drive motors to desired angles on readouts.	INCREASE-DECREASE repeater lt	

1.3.2.6 LEB AGC Display and Keyboard.

Figure 1-44 illustrates the SCM equivalent of the S/C LEB AGC display and keyboard and its associated IOS repeater panels. The controls and displays on this panel are associated with the guidance and navigation system simulation.

Table 1-36 defines the function and instructor visibility to the status of each of the controls and displays.

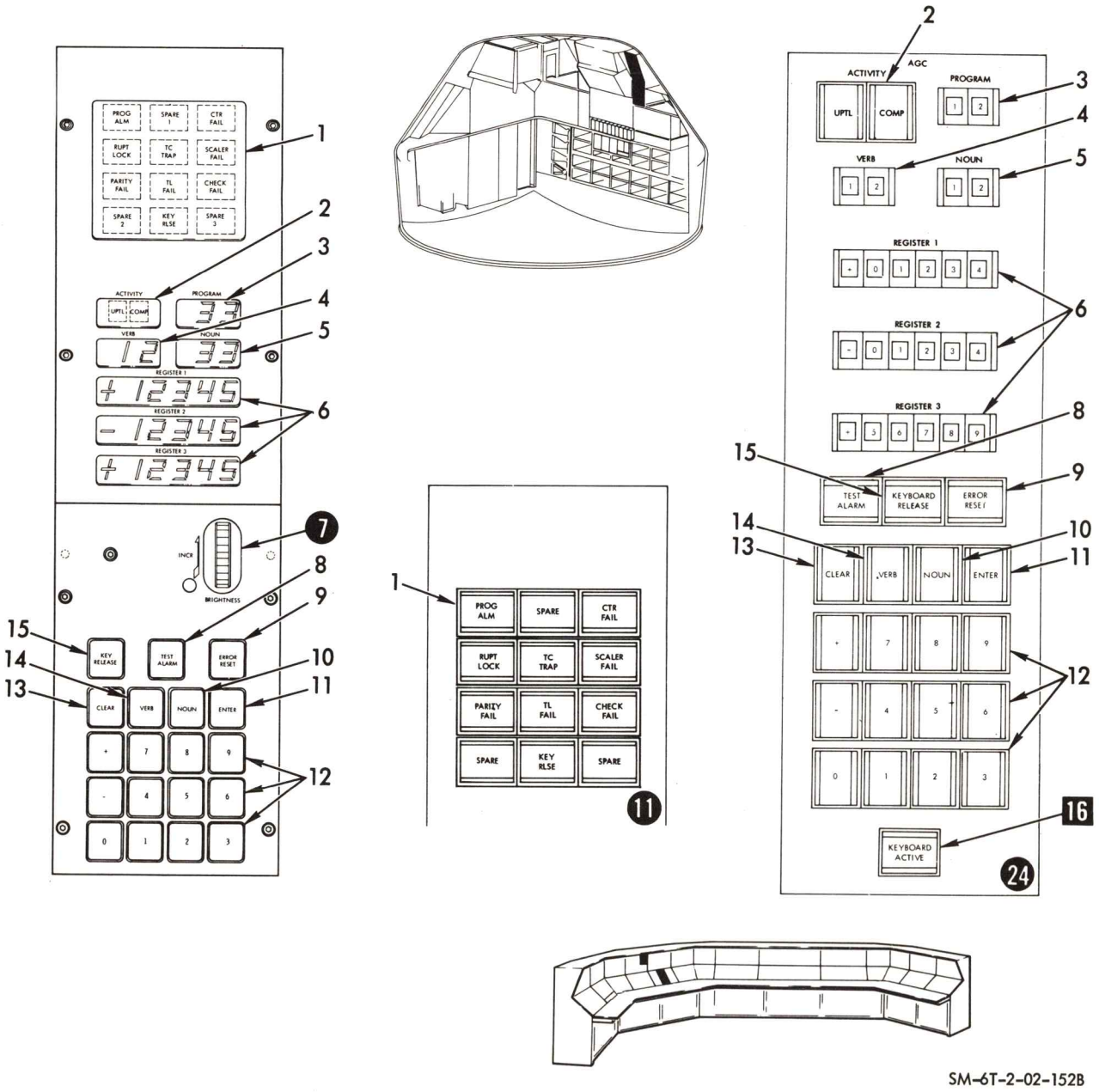

Figure 1-44. LEB Navigation and Display Keyboard Panel (Spacecraft Panel No. 33)

Table 1-36. LEB Navigator and Display Keyboard Panel (S/C Panel No. 33)

Key	Nomenclature	Function	Instructor Visibility	Remarks
1	Alarm condition lt	When on, indicates specific alarm condition of computer.		
	PROG ALM lt	Indicates improper internal execution of AGC program.	Repeater lt	
	CTR FAIL lt	Indicates increment counter instruction has been in progress longer than 20 msec.	Repeater lt	
	RUPT LOCK lt	Indicates computer is locked up in interrupt state.	Repeater lt	
	TC TRAP lt	Indicates computer is in transfer control trap.	Repeater lt	
	SCALER FAIL lt	Indicates that oscillator has failed or 100 pps source is not active.	Repeater lt	
	PARITY FAIL lt	Indicates that parity check has failed.	Repeater lt	
	TL FAIL lt	Indicates failure in processing telemetry data.	Repeater lt	
	CHECK FAIL lt	Indicates that DSKY program encounters improper operating condition.	Repeater lt	
	KEY RLSE lt	Indicates that internal computer program has attempted to use verb-noun subroutine and has found keyboard and display busy.	KEY RELEASE Repeater lt	
2	ACTIVITY lt	When on, indicates activity in which computer is presently engaged.		In event of simulated electroluminescent lamp failure, IOS repeaters will continue to display commanded AGC characters.
	UPTL	Indicates computer is receiving information from telemetry up-data link.	Repeater lt	
	COMP	Indicates computer is engaged in computation.	Repeater lt	
3	PROGRAM display	A two-digit display indicating number of program presently in progress.	Repeater display	
4	VERB display	A two-digit display indicating characters of code selected.	Repeater display	
5	NOUN display	A two-digit display indicating characters of noun code selected.	Repeater display	

Table 1-36. LEB Navigator and Display Keyboard Panel (S/C Panel No. 33) (Cont)

Key	Nomenclature	Function	Instructor Visibility	Remarks
6	REGISTER 1 display	Displays selected source data or first component of multicomponent data.	Repeater display	In event of simulated electroluminescent lamp failure, IOS repeaters will continue to display commanded AGC characters.
	REGISTER 2 display	Displays selected source data or second component of multicomponent data.	Repeater display	
	REGISTER 3 display	Displays selected source data or third component of multicomponent data.	Repeater display	
7	BRIGHTNESS thumbwheel	Varies brightness of electroluminescent data displays, register 1, register 2, and register 3.	Repeater indicator	Repeater indicator for this control is located on IOS panel No. 23.
8	TEST ALARM sw	When depressed, lights alarm display.	Repeater lt	In event that keyboard is failed or AGC is off, keyboard repeats will still be presented at IOS but KEYBOARD ACTIVE lt will not be illuminated.
9	ERROR RESET sw	When depressed, causes computer alarm display to go out.	Repeater lt	
10	NOUN P/B	Prepare computer to accept noun code.	Repeater lt	
11	ENTER P/B	Causes data or noun-verb command to be entered into computer.	Repeater lt	
12	KEYBOARD + P/B	Provides capability of identifying data to be placed in computer as positive.	Repeater lt	
	KEYBOARD - P/B	Provides capability of identifying data to be placed in computer as negative.	Repeater lt	
	KEYBOARD 0 to 9 P/B	Places in computer binary equivalents of octal or decimal digits shown.	Repeater lt	
13	CLEAR sw	Allows operator to erase erroneous number placed in during data loading.	Repeater lt	
14	VERB sw	Prepares computer to accept verb code.	Repeater lt	
15	KEY RELEASE sw	Releases registers 1, 2, and 3 from displaying keyboard data and allows display of program data.	KEYBOARD RELEASE repeater lt	In event that keyboard is failed or AGC is off, keyboard repeats will still be presented at IOS but KEYBOARD ACTIVE lt will not be illuminated.
16	KEYBOARD ACTIVE lt (IOS only)	Indicates keyboard entry is required, in progress, or impending.		Cues I/O that keyboard entries are being made or are expected.

1.3.2.7 AGC Computer Control Panel.

Figure 1-45 illustrates the SCM equivalent of the S/C AGC computer control panel and its associated IOS repeater panel. The control on this panel is associated with the guidance and navigation system simulation. Table 1-37 defines the function and instructor visibility to the setting of the panel control.

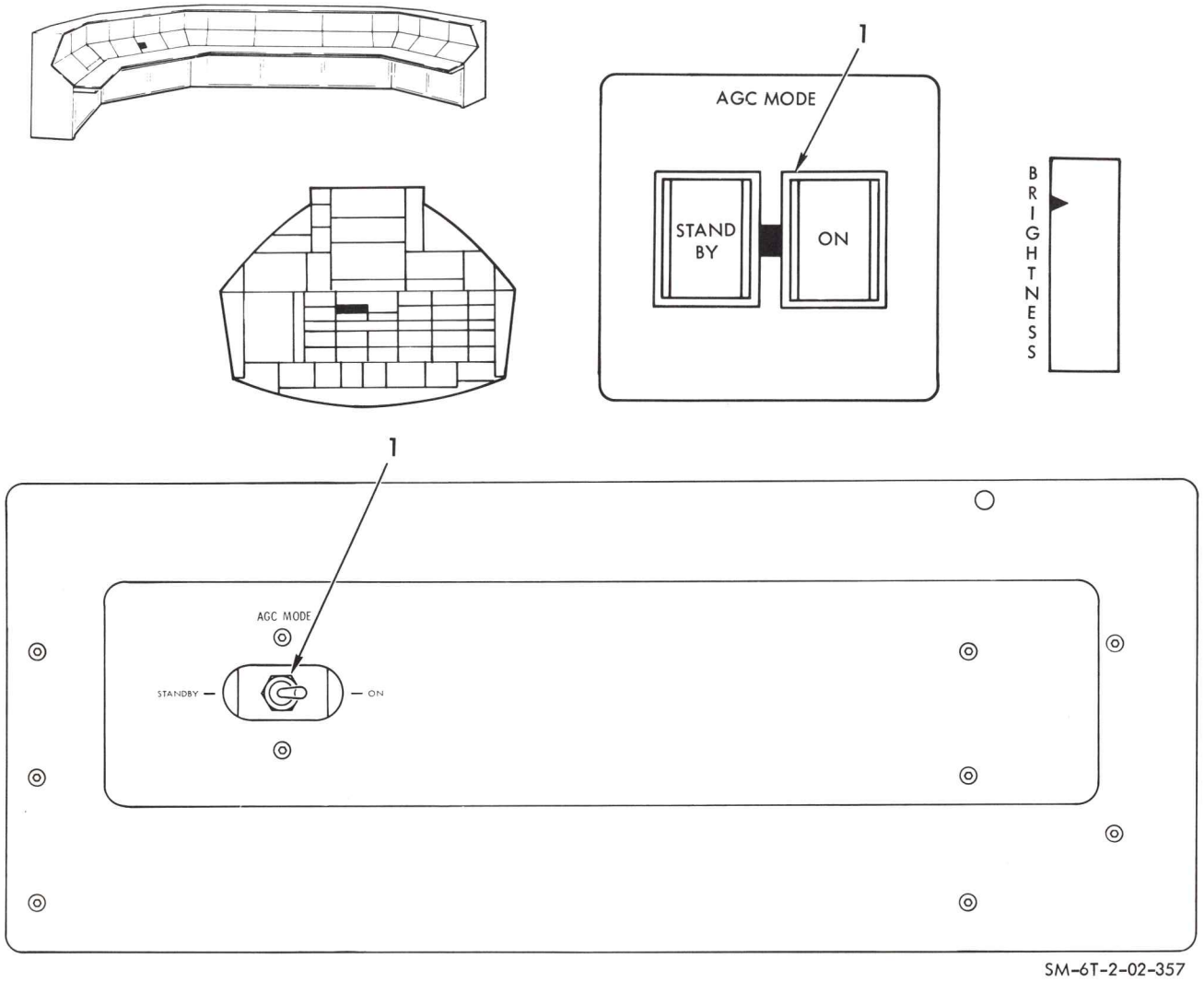

Figure 1-45. AGC Computer Control Panel (Spacecraft Panel No. 43)

Table 1-37. AGC Computer Control Panel (S/C Panel No. 43)

Key	Nomenclature	Function	Instructor Visibility	Remarks
1	AGC MODE sw			
	STANDBY	Applies reduced power to AGC.	Repeater lt	
	ON	Applies normal power to AGC.	Repeater lt	

1.3.2.8 LEB Circuit Breaker Panel.

Figure 1-46 illustrates the SCM equivalent of the LEB circuit breaker panel and its associated IOS repeater panel. The controls on this panel are associated with the sequence control group and electrical power system simulation.

Table 1-38 defines the function and instructor visibility to the setting of each of the controls.

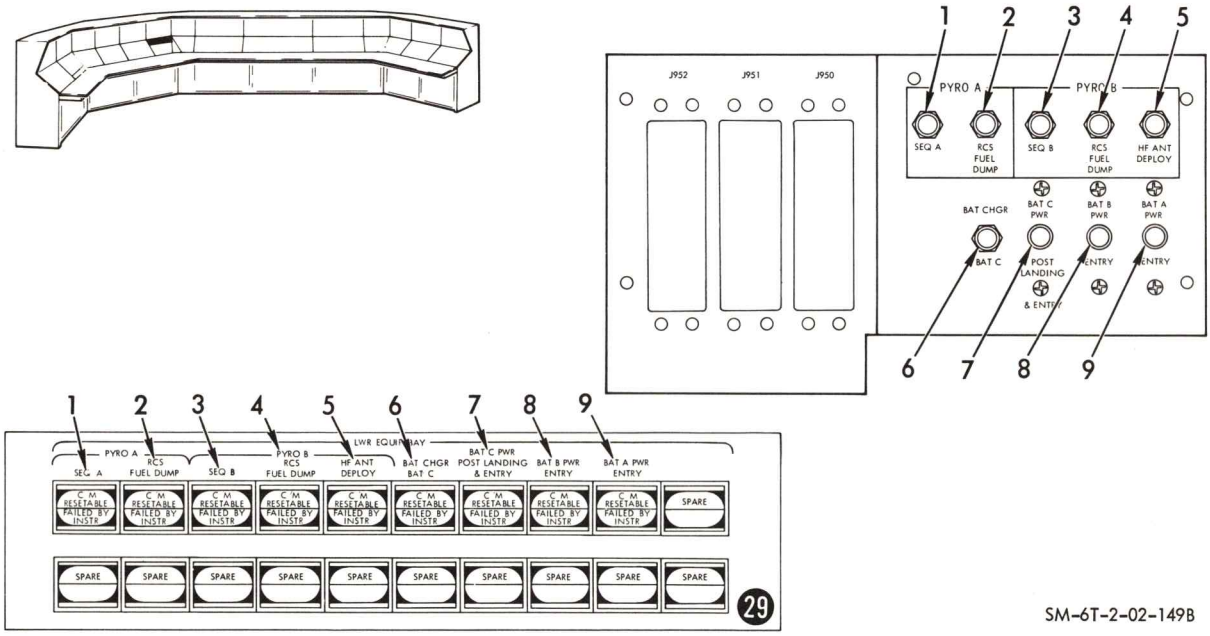

Figure 1-46. LEB Circuit Breaker Panel (Spacecraft Panel No. 71)

Table 1-38. LEB Circuit Breaker Panel (S/C Panel 71)

Key	Nomenclature	Function	Instructor Visibility	Remarks
	PYRO A circuit breakers			Depressing circuit breaker sw lt trips associated circuit breaker in C/M and illuminates FAILED BY INSTRUCTOR portion of split-level indicator. Circuit breaker is not resetable until sw lt is depressed second time, at which time, C/M RESETABLE portion of split-level indicator illuminates.
1	SEQ A	Applies d-c power to MESC pyro bus when MASTER EVENT SEQ CON - PYRO sw is in ARM position.	Repeater sw-lt	
2	RCS FUEL DUMP	Applies d-c power to open contacts of RCS pyro arm relay in MESC.	Repeater sw-lt	
	PYRO B circuit breakers			
3	SEQ B	Applies d-c power to MESC pyro bus when MASTER EVENT SEQ CONT - PYRO sw is in ARM position.	Repeater sw-lt	
4	RCS FUEL DUMP	Applies d-c power to open contacts of RCS pyro arm contacts in MESC.	Repeater sw-lt	
5	HF ANT DEPLOY	Applies d-c power to ANTENNA PYRO ARM/OFF sw.	Repeater sw-lt	
6	BAT CHGR - BAT C circuit breaker	Applies d-c power from postlanding battery C to BATTERY CHARGER selector sw and to DC INDICATORS sw.	Repeater sw-lt	
7	BAT C PWR - POST LANDING & ENTRY circuit breaker	Applies d-c power from postlanding battery C through BUS TIE - MAIN B - BAT C circuit breaker to flight and postlanding bus. Also supplies power to MAIN A - BAT C and BUS TIE - MAIN B - BAT C circuit breaker.	Repeater sw-lt	
8	BAT B PWR - ENTRY circuit breaker	Applies power from entry battery B to battery bus B.	Repeater sw-lt	
9	BAT A PWR - ENTRY circuit breaker	Applies power from entry battery A to battery bus A.	Repeater sw-lt	

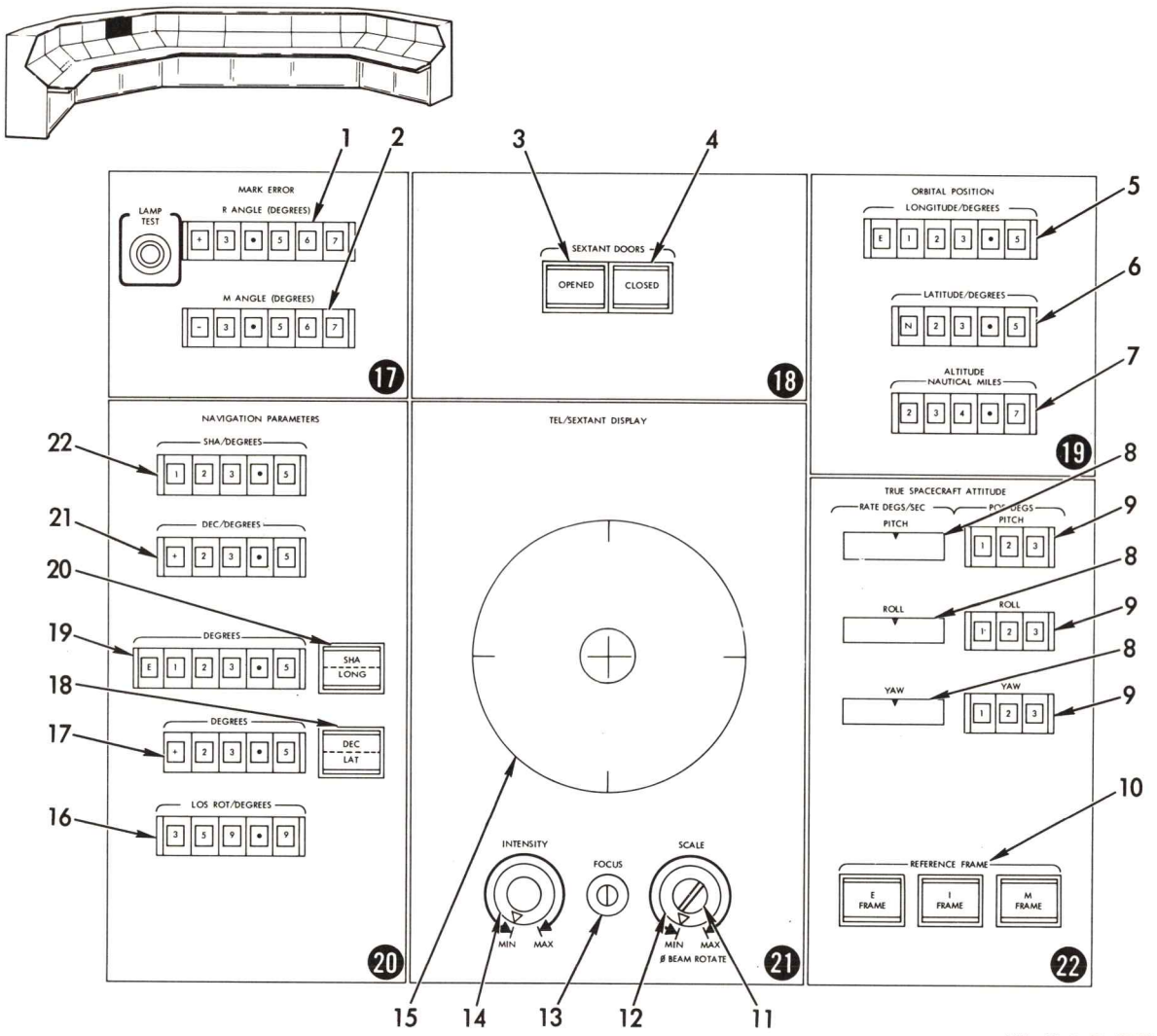

Figure 1-47. G&N Supplementary Displays

1.3.3 G&N SUPPLEMENTARY DISPLAYS.

The nature of the flight crew operation of the simulated G&N system is such that the IOS repeater indicators do not provide sufficient visibility for effective instructor-operator monitoring. For this reason, the G&N system repeater indicators have been augmented with special supplementary IOS displays. These displays are illustrated in figures 1-47 and 1-48 and described in tables 1-39 and 1-40. IOS panels involved are as follows:

- Panel 17 - Mark error
- Panel 21 - Tel/sextant display
- Panel 25 - Navigation evaluation panel
- Panel 20 - Navigation parameters
- Panel 22 - True spacecraft attitude
- Panel 19 - Orbital position
- Panel 18 - Sextant doors

1.3.3.1 Mark Error Display (Panel 17).

The mark error display panel, when used in conjunction with the TEL/SEXTANT display (panel 21) and the navigation evaluation display (panel 25), enable the instructor-operator to observe flight crew operation of the telescope and sextant during navigational problems.

The mark error panel displays the error between the telescope line of sight and the line of sight to a specific landmark during earth orbital navigation, or the error between the sextant line of sight and the line of sight to a specified navigational star. The digital readout is in degrees from -9.999 to +9.999 with a least-count resolution of 0.003 degree for the sextant and 0.300 degree for the telescope.

The display is activated by the insertion of the star or landmark coordinates into the AMS up-data link at the IOS (see also section I, Volume II of this handbook) and the positioning of the ATTITUDE IMPULSE-ENABLE switch to the ON position, or when the optic hand controller is displaced from the deadband position. The display will then read out the changing error angles until the MARK button is depressed on the SCM G&N panel. At this time, the display will freeze for a period of time determined by the MARK HOLD RELEASE mode switch on panel 25. If the AUTO mode were selected by the AUTO-MAN alternate-action pushbutton, the display would remain frozen for 3 seconds to allow the instructor-operator to make notations. If the MAN position were selected, the display would release when the MARK switch light is depressed by the instructor-operator.

The R ANGLE readout displays the change of telescope/sextant shaft angle required to align the reticle R line with the selected star or landmark. The M ANGLE readout displays the change of telescope/sextant trunnion angle required to align the reticle M line with the selected star or landmark.

Table 1-39. G&N Supplementary Displays

Key	Nomenclature	Function	Remarks
1	MARK ERROR - R ANGLE (DEGREES) display	Displays angular coordinates of landmark with respect to telescope LOS or angular coordinates of star with respect to sextant LOS.	For navigation, readouts provide alignment displacement in terms of angles using M and R lines for coordinates.
2	MARK ERROR - M ANGLE (DEGREES) display	Same as 1.	Same as 1.
3	SEXTANT DOORS - OPENED lt	Indicates sextant doors fully open	Optics not operational until doors are fully opened.
4	SEXTANT DOORS - CLOSED lt	Indicates sextant doors fully closed and locked.	
5	ORBITAL POSITION - LONGITUDE/DEGREES display	Five-digit alphanumeric display which indicates longitude of S/C orbital position.	
6	LATITUDE/DEGREES display	Four-digit alphanumeric display which indicates latitude of S/C orbital position.	
7	ALTITUDE-NAUTICAL MILES display	Four-digit numeric display of S/C altitude orbital position.	
8	TRUE SPACECRAFT ATTITUDE - RATE DEGS/SEC displays	Three-digit readout indicating PITCH, ROLL, and YAW components of true S/C rates.	
9	ATTITUDE - POS DEGS display	Three-digit readout indicating PITCH, ROLL, and YAW components of true S/C attitude.	
10	REFERENCE FRAME	Provides indication as to whether inertial reference is E, I, or M frame.	Only reference frame E lt implemented on SE-012.
11	TEL/SEXTANT DISPLAY-BEAM ROTATE control	Provide beam rotate adjustments.	
12	SCALE control	Provides control of scale illumination.	
13	FOCUS control	Provides focus control of presentation.	
14	INTENSITY	Provides control of display intensity.	
15	TEL/SEXTANT display	Presents analog of sextant and telescope view.	
16	NAVIGATION PARAMETERS-LOS ROT/ DEGREES indicators	Provides four-digit indication of amount of rotation about shaft axis.	
17	NAVIGATION PARAMETERS-DEGREES display	Five-digit alphanumeric readout which indicates coordinates of point of intersection of associated line of sight and earth-moon-celestial sphere.	
18	NAVIGATION PARAMETERS-DEC-LAT lt	Split-screen lt which shows whether associated display is reading latitude (landmark SCT sighting) or declination (star SXT sighting).	
19	NAVIGATION PARAMETERS-DEGREES display	Five-digit alphanumeric readout which indicates coordinate of point of intersection of associated line of sight and earth-moon-celestial sphere.	

Table 1-39. G&N Supplementary Displays (Cont)

Key	Nomenclature	Function	Remarks
20	NAVIGATION PARAMETERS-SHA/LONG lt	Split-screen lt which shows whether associated display is reading longitude (landmark SCT sighting) or sidereal hour angle (star SXT sighting).	
21	NAVIGATION PARAMETERS-DEC/ DEGREES	Provides four-digit readout of declination of sextant shaft line of sight.	
22	NAVIGATION PARAMETERS-SHA/ DEGREES	Provides four-digit readout of sidereal hour angle of sextant shaft line of sight.	

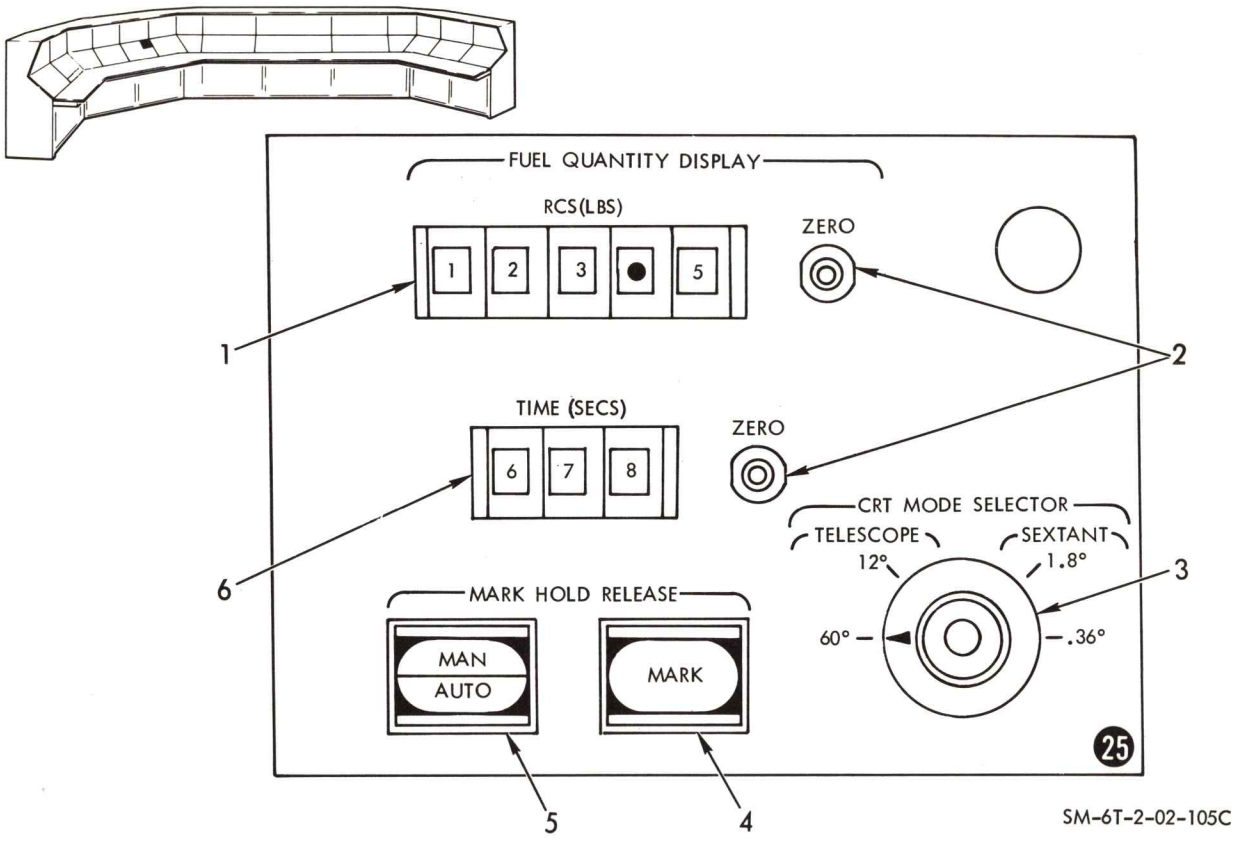

Figure 1-48. Navigation Evaluation Panel

Table 1-40. Navigation Evaluation Panel

Key	Nomenclature	Function	Remarks
1	FUEL QUANTITY DISPLAY - RCS (LBS) display	Four-digit indicator which records amount of fuel consumed during navigation sighting.	
2	FUEL QUANTITY DISPLAY - ZERO sw	Manual control (two) for zeroing related digital displays.	
3	CRT MODE SELECTOR sw	Rotary sw that selects reference and field of view for CRT display.	
4	MARK HOLD RELEASE - MARK sw-lt	Depressing the sw-lt causes release of items 1 and 6 of this panel, items 1 and 2 of panel No. 17, and the CRT display on panel No. 21.	
5	MARK HOLD RELEASE - MAN-AUTO sw-lt	Depressing the sw-lt determines whether indicators are under manual or computer control.	
6	FUEL QUANTITY DISPLAY - TIME (SECS) display	Three-digit timer, actuated by MINIMUM IMPULSE control or optics hand controller that times navigation sighting.	

Selection by the instructor-operator between the TELESCOPE and SEXTANT positions of CRT MODE SELECTOR switch on panel 25 will determine which error angles are being displayed. The instructor-operator shall determine which optical instrument is being used by the flight crew by means of the closed circuit TV monitors.

1.3.3.2 TEL/SEXTANT Display (Panel 21).

This panel consists of a 5-inch CRT which displays the relative location between an earth landmark and reticle, star and reticle, and lunar landmark and reticle when using the telescope. During sextant operation, the relative position between a star, a second star, and the reticle, and between a lunar landmark, star, and reticle are displayed.

A landmark is represented on the CRT as a circle and a star by a dot. A reticle with the lower portion of the R line blanked is electronically generated to represent either the sextant or telescope reticle. If the images on the CRT are within the scribed reticle and 1-inch circle, the field-of-view scale may be increased at panel 25 and the images will remain on the face of the CRT.

The display becomes activated at the same time as those on panel 17 if the proper CRT MODE SELECTOR positions are selected. For telescope operation, the display is only active on the 60° or 12° positions. The display will only be active for sextant operation if the 1.8° or 0.36° position of the CRT MODE SELECTOR switch is selected.

The use of a star in the sextant landmark line of sight to permit simulating a star-to-star navigation task must be identified to the AMS computer complex by the IOS operator. The identification is accomplished by the addition of a code to the star coordinator as a star that is to be associated with the sextant landmark line of sight. This code identifies that subsequent tasks are to be star-to-star sightings and that the selected star will be viewed through the sextant landmark line of sight. Codes are identified in section I of Volume II of this handbook.

1.3.3.3 Navigational Evaluation Panel (Panel 25).

The controls and displays on this panel provide the instructor-operator with the means of evaluating the effectiveness of G&N system operation during navigational sightings. A time display (0 to 999 seconds) is activated when the optics controller is out of deadband or when the ATTITUDE IMPULSE-ENABLE switch is positioned to ON. The timer will continue to run until the MARK button is depressed in the SCM. In addition to freezing the timer, the RCS (LBS) indicator, which has been recording the propellant utilized from the same time that the timer was activated, is also frozen. The CRT display (panel 21), and the MARK ERROR indicator are also frozen as described above. As described for the mark error panel, the freeze duration is a function of the MARK HOLD RELEASE - MAN/AUTO split level switch indicator. If the MAN position is selected by the instructor, the freeze lasts until the MARK HOLD RELEASE - MARK switch is depressed. At this time, all displays are released to begin timing and monitoring until the next marks signal is received.

If the AUTO mode is selected, the displays are frozen at the time of the first MARK for a period of 3 seconds to allow the instructor-operator to make notations. At the end of the 3 seconds, the displays are updated by 3 seconds and resume normal operation. If a second MARK was initiated during the first 3-second time period, the displays will advance to the second time of mark after completing the first hold period. After holding the second mark period for 3 seconds, the displays will be updated by 3 to 6 seconds to the actual time since starting and then resume its normal operation. The system is capable of handling a maximum of three such marks in any 3-second interval.

The ZERO buttons are used to return the RCS (LBS) and TIME (sec) indicators to zero.

1.3.3.4 Navigation Parameters (Panel 20).

The navigation parameter panel consists of two sets of displays. One set (items 16, 21, and 22 in figure 1-47) provides the instructor-operator with the orientation of the sextant with respect to the celestial sphere, and these displays are continually displayed. The second set (items 17, 18, 19, and 20 also in figure 1-47) consists of shared displays associated with the telescope or the sextant lines of sight.

The SHA/DEGREES display indicates the sidereal hour angle of the sextant shaft line of sight from 0 to 359.9 degrees. The DEC/DEGREES readout indicates the declination of the sextant line of sight from -90.0 to +90.0 degrees. The LOS ROT/DEGREES indicator displays the angle the sextant trunnion axis makes with the meridians of the celestial sphere measured positive clockwise from north. The displays are not active until the SCM altitude is greater than 450,000 feet.

Two split-screen indicators, labeled SHA/LONG and DEC/LAT, are associated with the readouts illustrated as items 17 and 19 in figure 1-47. When the SHA portion of the upper indicator is illuminated, the adjacent display to it indicates the sidereal hour angle of the point of intersection of the sextant line of sight with the celestial sphere (0 to 359.9 degrees with the first digit blank). When the LONG portion is illuminated, the display indicates the longitude of the telescope line of sight on the earth's surface (E, 0 to 359.9 degrees). During the illumination of the DEC portion of the lower split-level indicator, the declination of the point of intersection of the sextant line of sight with the celestial sphere is displayed (+ or -, 0 to 90.0 degrees). When the LAT portion is lighted, the latitude of the telescope line of sight on the earth's surface is displayed (+ or -, 0 to 90.0 degrees).

The activation of the split-level indicator, and associated displays, is computer-controlled, and the indicator and displays operate under the following conditions. The LONG/LAT displays and indicators are active only when the telescope line of sight is less than 55 degrees from the local vertical, or nadir, and the SCM altitude is greater than 450,000 feet. The telescope LONG/LAT indicators only have significance if the telescope is slaved to the sextant star line of sight. The SHA/DEC displays and indicators are active only if the sextant line of sight is greater than 67 degrees from the nadir, and the SCM altitude is greater than 450,000 feet.

1.3.3.5 True Spacecraft Attitude Panel (Panel 22).

The true spacecraft attitude panel displays the pitch, roll, and yaw attitude to the nearest degree and the angular rate of spacecraft rotation in degrees per second.

The spacecraft's attitude frame of reference is displayed by indicator lights at the bottom of the panel. Selection of the reference frame is provided by the computer based on the spacecraft location relative to the celestial bodies. For the SE 012 AMS only the E reference light is activated.

1.3.3.6 Orbital Position Display (Panel 19).

The orbital position panel provides the indication of the vehicle's longitude, latitude, and attitude. The longitude display indicates from W 180.0 to E 180.0 degrees with an accuracy of ±0.1 degree. The latitude display will indicate from N 90.0 to S 90.0 degrees with an accuracy of ±0.1 degree. The attitude display ranges from 0 to 999.9 nautical miles with an accuracy of 0.1 nautical mile.

1.3.3.7 Sextant Doors Display (Panel 18).

The sextant doors panel monitors the status of the sextant doors. The OPENED light, when illuminated, indicates the doors are open and the telescope and sextant are functional. The CLOSED light indicates the doors are fully closed and locked. Neither light is illuminated during transition.

Operation of the door control mechanism closely duplicates that of the spacecraft. The initial nine turns of the universal tool represent unlocking, and the next three turns represent the opening of the doors. The optics are not functional until the doors are fully open. Closing and locking of the doors require the same amount of motion in the reverse direction.

1.3.4 RIGHT-HAND AND RIGHT-HAND FORWARD EQUIPMENT BAYS.

The right-hand and right-hand forward equipment bays of the SE 012 AMS contain three equivalent spacecraft panels. These are the waste management panel, the right-hand circuit breaker panel, both located at the right-hand equipment bay, and the in-flight test system panel located at the right-hand forward bay. These panels are illustrated and functionally described in the following paragraphs.

1.3.4.1 Waste Management Panel.

Figure 1-49 illustrates the SCM equivalent of the S/C waste management panel and its associated IOS repeater panel.

Table 1-41 defines the function and instructor visibility to the setting of each control.

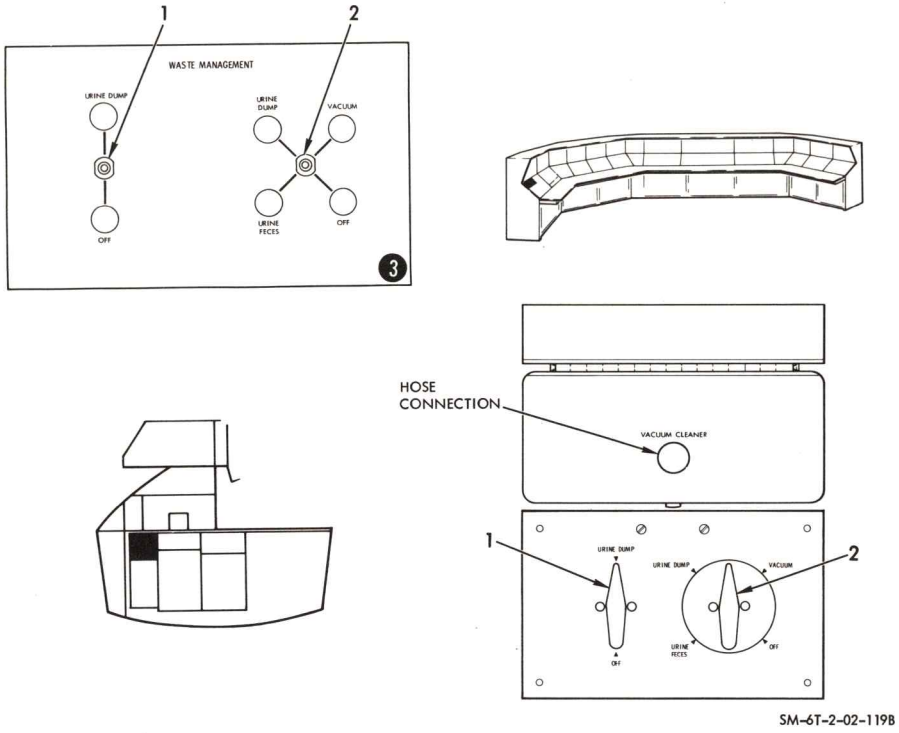

Figure 1-49. Waste Management System Panel (Spacecraft Panels No. 90 and No. 91)

Table 1-41. Waste Management System Panel (S/C Panels No. 90 and 91)

Key	Nomenclature	Function	Instructor Visibility	Remarks
1	URINE DUMP/OFF valve			
	URINE DUMP	Enables urine to be dumped overboard if both waste management valves are placed to URINE DUMP position.	Repeater lt	
	OFF	Closes urine line to outside atmosphere.	Repeater lt	
2	Selector valve			
	URINE DUMP	Connects urine disposal lock to urine dump line enabling urine to be dumped overboard if URINE DUMP/ OFF valve is placed to URINE DUMP position.	Repeater lt	
	VACUUM	Activates waste management blower permitting vacuum cleaner filter to retain debris while blower vents air and odors to ECS.	Repeater lt	Vacuum cleaner not installed in AMS No. 2.
	OFF	Disables functions of waste management controls.	Repeater lt	
	URINE FECES	Enables urine flow to urine disposal lock, activates blower routing odors from fecal canister and urine disposal lock to ECS.	Repeater lt	

1.3.4.2 Right-Hand LEB Circuit Breaker Panel.

Figure 1-50 illustrates the SCM equivalent of the S/C right-hand LEB circuit breaker panel and its associated IOS repeater panel. The controls on this panel are associated with the electrical power system simulation.

Table 1-42 defines the function and instructor visibility to the setting of each of the controls.

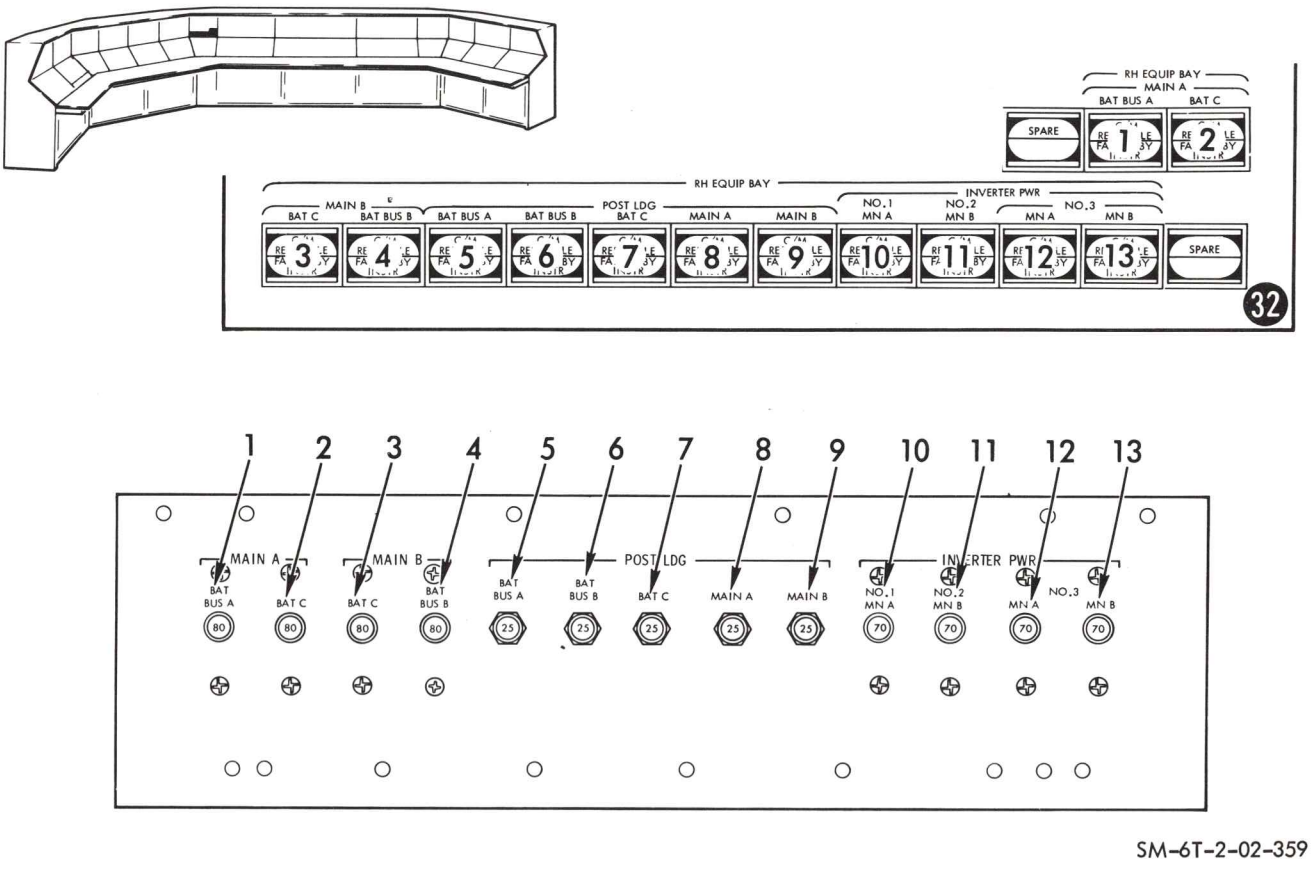

SM-6T-2-02-359

Figure 1-50. RH (LEB) Circuit Breaker Panel (Spacecraft Panel No. 87)

Table 1-42. RH (LEB) Circuit Breaker Panel (S/C Panel No. 87)

Key	Nomenclature	Function	Instructor Visibility	Remarks
	MAIN A circuit breakers			
1	BAT BUS A	Applies power from battery bus A to d-c main bus A through contacts of main bus tie bat A motor sw.	Repeater sw-lt	Depressing circuit breaker sw-lt trips associated circuit breaker in C/M and illuminates FAILED BY INSTRUCTOR portion of split-level indicator. Circuit breaker is not resetable until depressed second time, at which time, C/M RESETABLE portion of split-level indicator illuminates.
2	BAT BUS C	Applies power from post-landing battery to d-c main bus A through contacts of main bus tie bat B motor sw.	Repeater sw-lt	
	MAIN B circuit breakers			
3	BAT C	Applies power from post-landing battery C to d-c main bus B through contacts of main bus tie bat A motor sw.	Repeater sw-lt	
4	BAT BUS B	Applies power from battery bus B to d-c main bus B through contact of main bus tie bat B motor sw.	Repeater sw-lt	
	POST LDG circuit breakers			
5	BAT BUS A	Applies power from battery bus A to flight and post-landing bus.	Repeater sw-lt	
6	BAT BUS B	Applies power from battery bus to flight and postland-ing bus.	Repeater sw-lt	
7	BAT C	Applies power from BAT C PWR - POSTLANDING, circuit breaker to flight and postlanding bus.	Repeater sw-lt	
8	MAIN A	Applies power from d-c main bus A to flight and postlanding bus.	Repeater sw-lt	
9	MAIN B	Applies power from d-c main bus B to flight and postlanding bus.	Repeater sw-lt	
	INVERTER PWR circuit breakers			
10	No. 1 MN A	Applies power from d-c main bus A to inverter 1.	Repeater sw-lt	
11	No. 2 MN B	Applies power from d-c main bus B to inverter 2.	Repeater sw-lt	
12	No. 3 MN A	Applies power from d-c main bus A to inverter 3.	Repeater sw-lt	
13	No. 3 MN B	Applies power from d-c main bus B to inverter 3.	Repeater sw-lt	

1.3.4.3 In-Flight Test System Panel.

Figure 1-51 illustrates the SCM equivalent of the S/C in-flight test panel and its associated IOS repeater panel.

Table 1-43 defines the function and instructor visibility to the status of controls and displays of the panel.

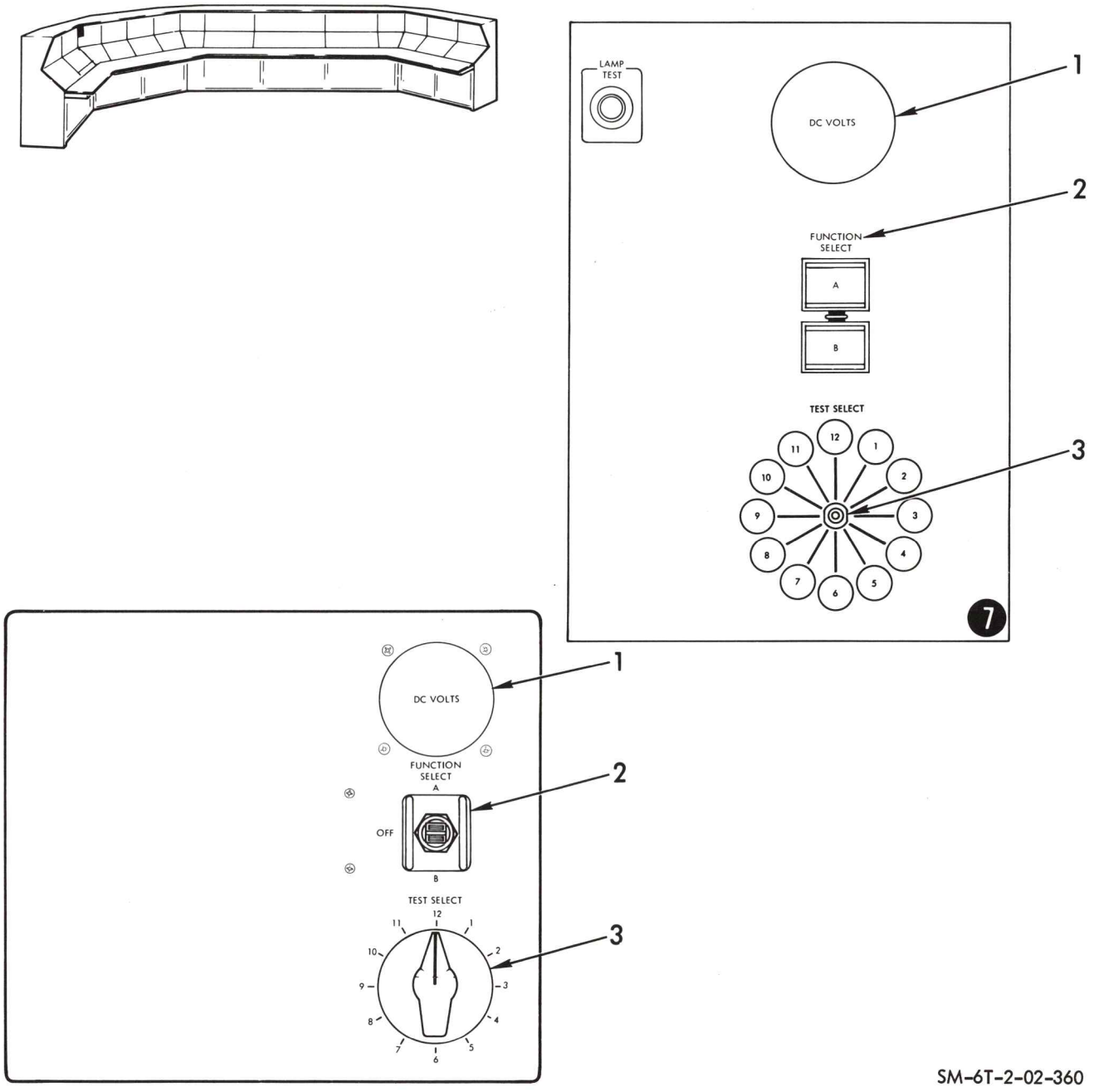

Figure 1-51. In-Flight Test System (Spacecraft Panel No. 97)

Table 1-43. In-Flight Test System (S/C Panel No. 97)

Key	Nomenclature	Function	Instructor Visibility	Remarks
1	DC VOLTS meter	Indicates voltage of parameter selected by FUNCTION SELECT and TEST SELECT sw.	Repeater meter	
2	FUNCTION SELECT sw			Only 18 parameters are monitored; switch positions 3, 4, 9, 10, 11, and 12 on B selection will result in no reading on voltmeter.
	A	Selects first set of 12 parameters to be monitored by DC VOLTS meter as selected by TEST SELECT sw.	Repeater lt	
	OFF	Disconnects all parameters from TEST SELECT rotary sw.		
	B	Select second set of 12 parameters to be monitored on DC VOLTS meter as selected by TEST SELECT rotary sw.	Repeater lt	
3	TEST SELECT rotary sw	Selects parameter to be monitored on DC VOLTS meter.	Repeater lt	

1.3.5 LEFT-HAND AND LEFT-HAND FORWARD EQUIPMENT BAYS.

The left-hand and left-hand forward equipment bays of the SE-012 AMS contain the panels associated with the environmental control system simulation. Also located at the left-hand forward equipment bay is the clock and event timer panel.

The following paragraphs illustrate and describe the functions associated with each panel.

1.3.5.1 Clock and Event Timer Panel.

Figure 1-52 illustrates the SCM equivalent of the S/C clock and event timer panel. There is no IOS repeater for this panel.

Table 1-44 defines the function of the timers and clock.

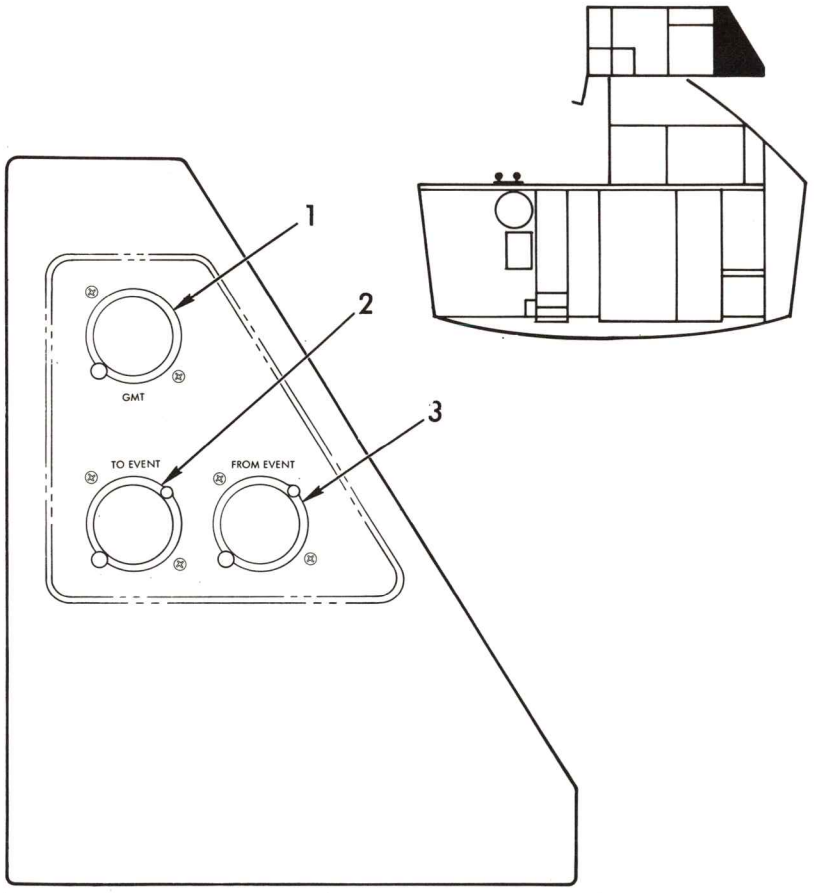

Figure 1-52. Clock and Event Timer Panel (Spacecraft Panel No. 66)

Table 1-44. Clock and Event Timer Panel (S/C Panel No. 66)

Key	Nomenclature	Function	Instructor Visibility	Remarks
1	GMT clock	Mechanical 24-hour clock indicating GMT.	(C/M only)	
2	TO EVENT timer	Mechanical timer used to indicate time to upcoming event within 10-hour period.	(C/M only)	
3	FROM EVENT timer	Mechanical timer used to indicate time from event within 10-hour period.	(C/M only)	

1.3.5.2 ECS Component Location.

Figure 1-53 illustrates the SCM equivalent of the spacecraft environmental control system controls and displays. The IOS repeaters of these controls are shown in figure 1-54.

Table 1-45 describes the function and instructor visibility to the status of each control and display.

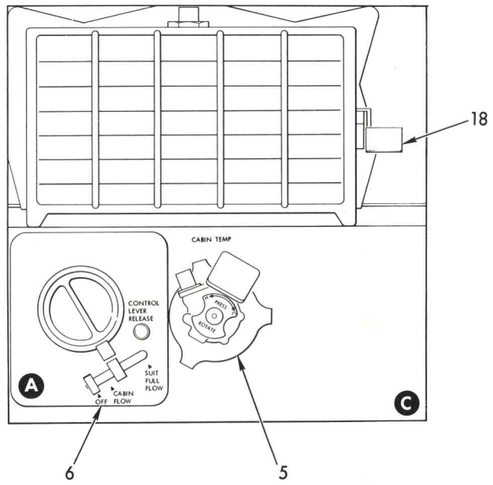

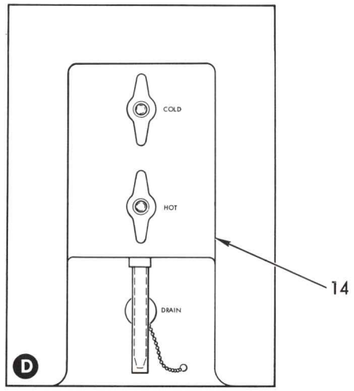

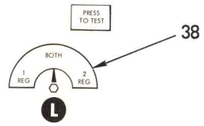

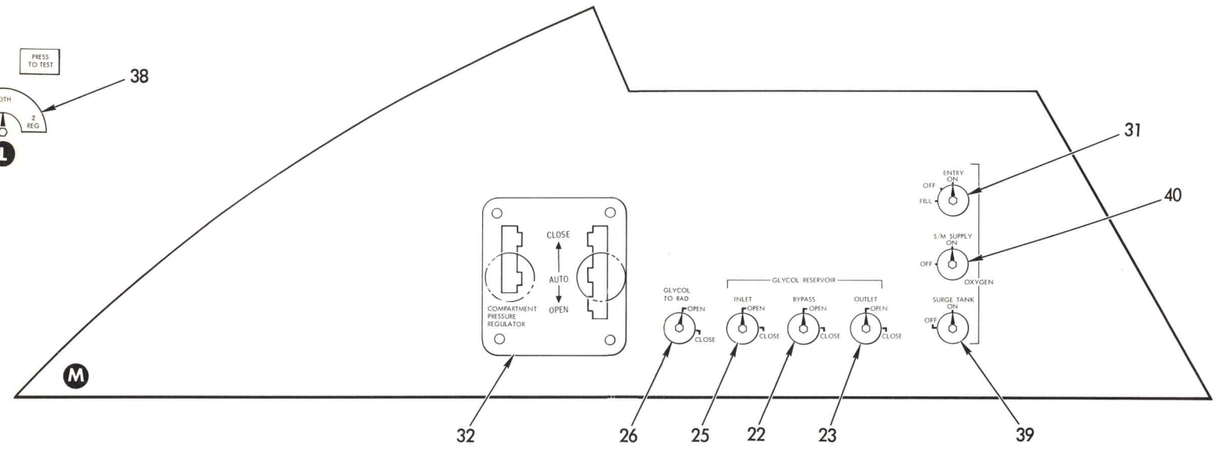

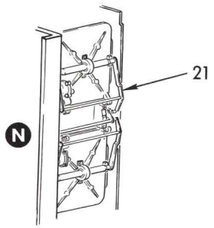

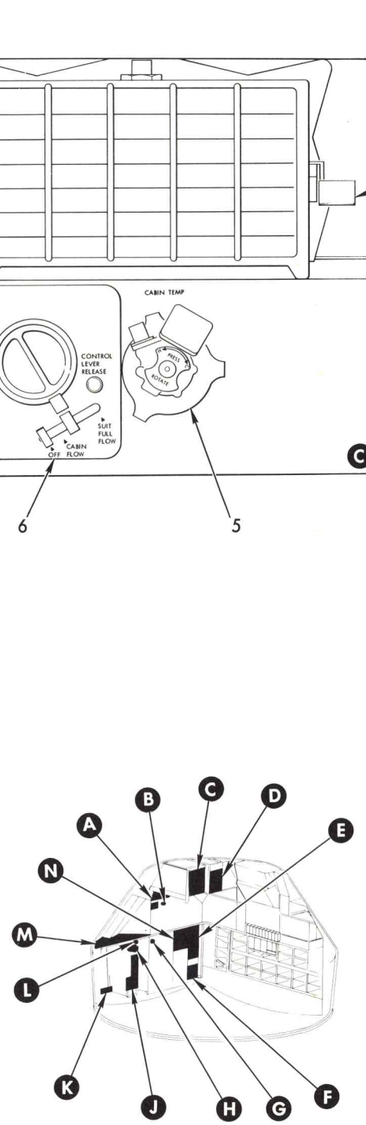

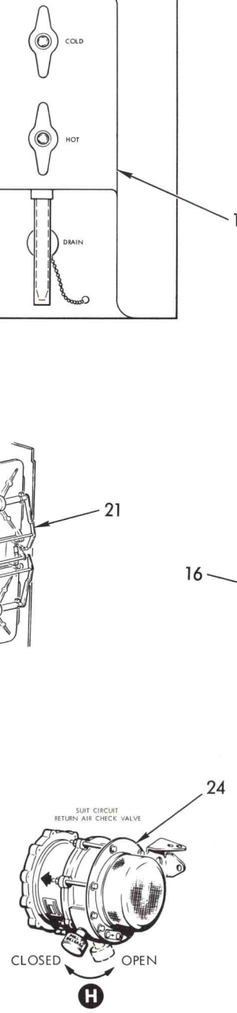

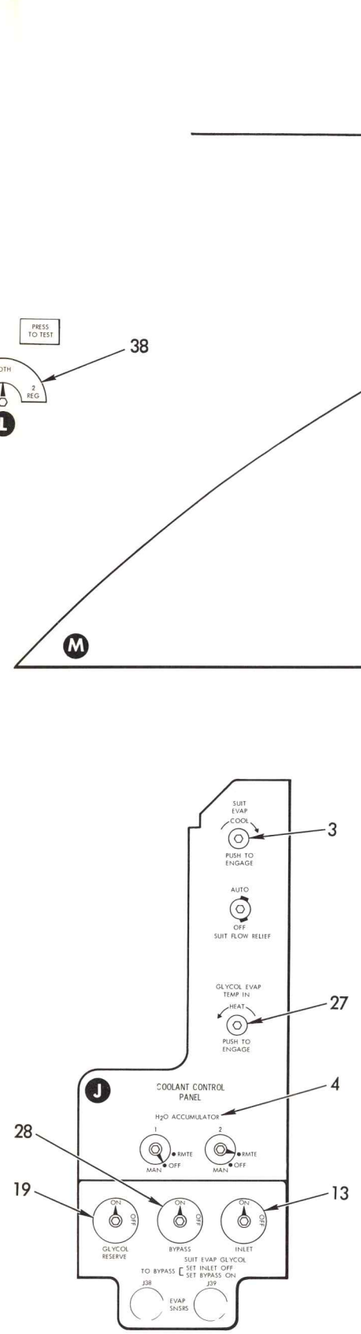

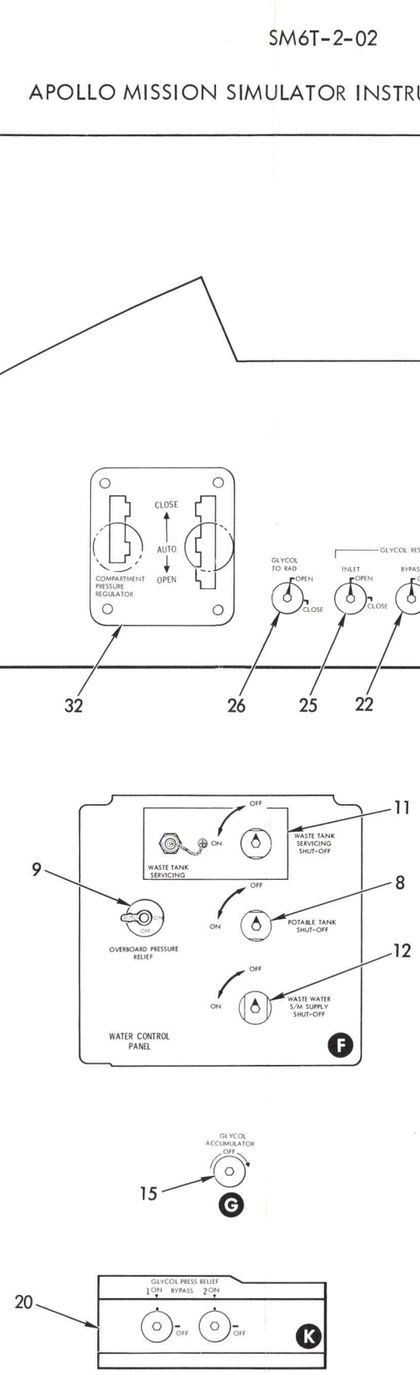

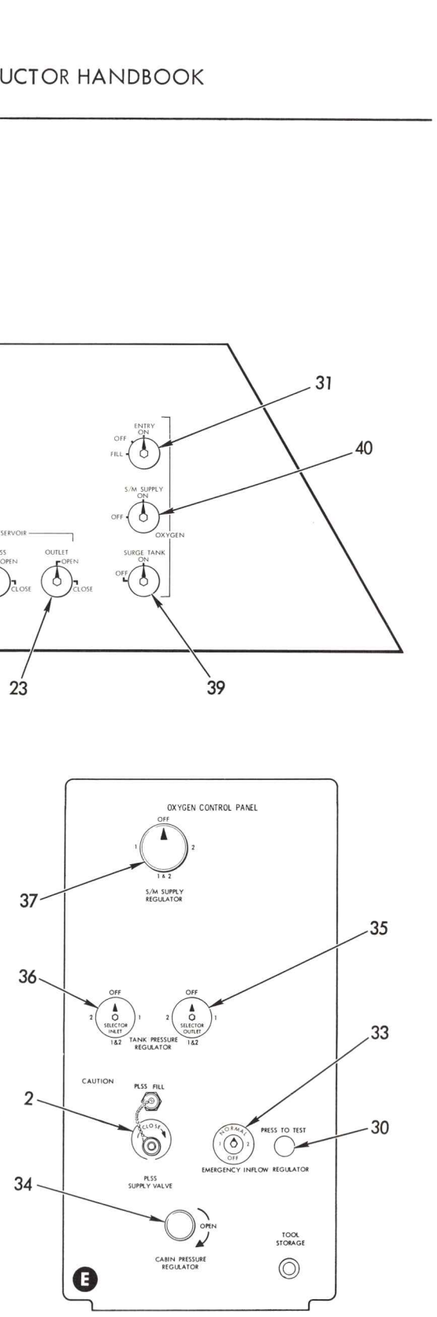

SM-6T-2-02-148D

Figure 1-53. ECS Components Location

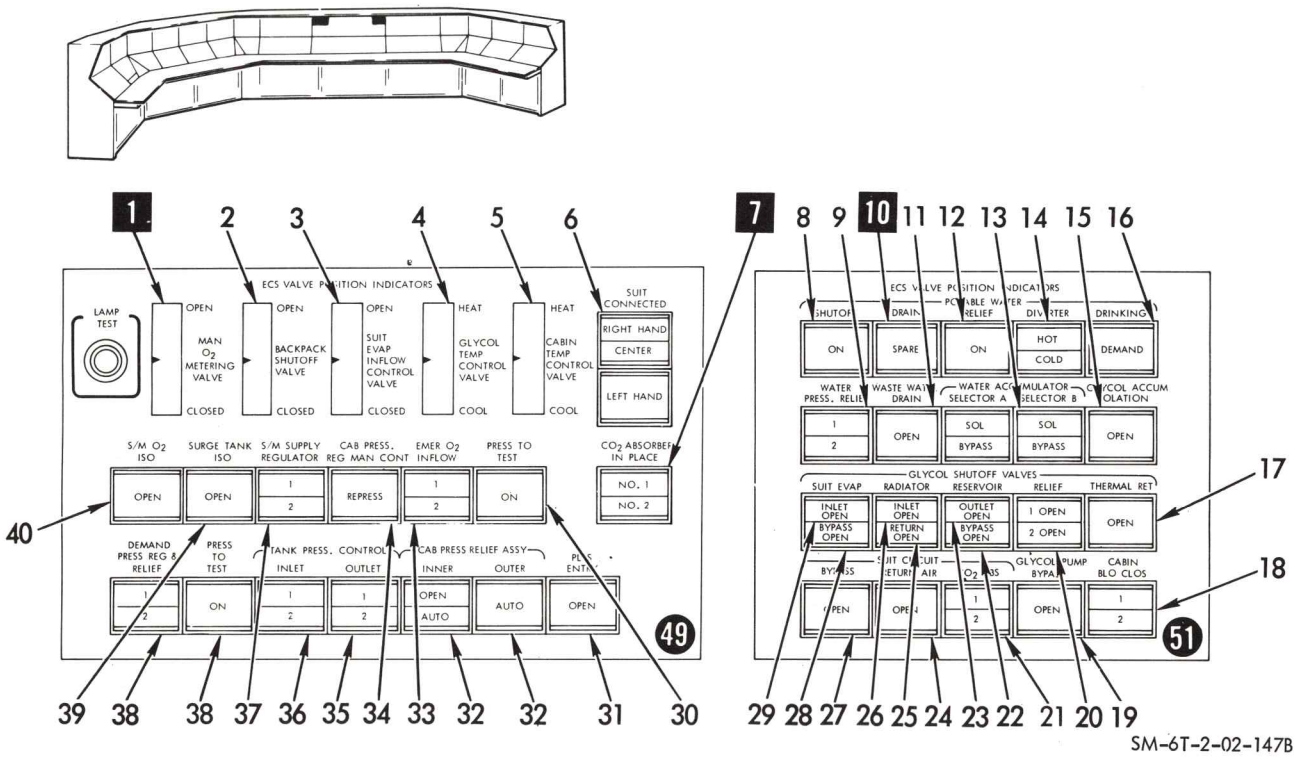

Figure 1-54. ECS Valve Position Indicator

Table 1-45. ECS Component Panels

Key	Nomenclature	Function	Instructor Visibility	Remarks
				NOTE The descriptive title listed under Nomenclature pertains to the item located within the SCM. The descriptive title under Instructor Visibility, where different, pertains to the item repeater indication at the IOS.
1	MANUAL O_2 METERING VALVE		Repeater indicator	Control is located on SCM panel No. 24. (See figure 1-35, item 7.)
	OPEN	Increases flow of O_2 into suit circuit.		
	CLOSED	Isolates suit circuit from manual O_2 supply.		
2	PLSS SUPPLY VALVE	Manual shutoff valve controls filling of PLSS backpacks with oxygen from supply in surge tank.	BACK PACK SHUTOFF VALVE indicator	Not simulated.
3	SUIT EVAP water control valve			
	Heat (CCW)	Manual backup mode position of suit heat exchanger water control valve to increase suit temperature.	SUIT EVAP IN-FLOW CONTROL VALVE indicator	Rotation counterclockwise (CLOSED) results in proportional increase in suit temperature as indicated by TEMP-SUIT meter on SCM panel No. 13.
	COOL	Manual backup mode position of suit heat exchanger water control valve to decrease suit temperature.		Rotation toward COOL position (OPEN) results in proportional decrease in suit temperature as indicated by TEMP-SUIT meter on SCM panel No. 13.
4	GLYCOL EVAP TEMP IN valve			
	HEAT	Manual backup mode position of water-glycol temperature of water-glycol entering evaporator.	GLYCOL TEMP CONTROL VALVE	Water-glycol temperature monitored on GLY-EVAP-TEMP OUT meter on SCM panel No. 13.
	COOL	Manual backup mode position of water-glycol temperature control to decrease temperature of water-glycol entering evaporator.		
5	CABIN TEMP control valve			
	H (heat)	Manual backup mode position of cabin temperature control valve to increase cabin temperature.	CABIN TEMP CONTROL VALVE	Cabin temperature monitored by TEMP-CABIN meter on SCM panel No. 13.
	C (cool)	Manual backup mode position of cabin temperature control valve to decrease cabin temperature.		

Table 1-45. ECS Component Panels (Cont)

Key	Nomenclature	Function	Instructor Visibility	Remarks
6	Suit connector valves	One for each suit station.		
	OFF	Closes valve, shutting off flow of oxygen to suit connector.	SUIT CONNECTED repeater lt	Flow gages monitoring suit air flow are located on IOS panel No. 2.
	CABIN FLOW	Partially opens valve, permitting oxygen flow at a rate compatible to metabolic requirements of one crewman.		
	SUIT FULL FLOW	Fully opens valve, permitting oxygen flow to suit at a rate compatible to metabolic requirements of one crewman.		
7	CO_2 ABSORBER IN PLACE indicator (IOS only)			
	NO. 1	Indicates No. 1 canister is in place in SCM.		Indicator enables I/O to be cognizant that trainee has physically removed CO_2 canisters.
	NO. 2	Indicates No. 2 canister is in place in SCM.		
8	POTABLE TANK SHUTOFF valve			
	ON	Permits flow of water from fuel cells into potable water tank.	Repeater lt	
	OFF	Shuts off flow of water from fuel cells into potable water tank.		
9	OVERBOARD PRESSURE RELIEF valve		WATER PRESS RELIEF lt	
	1 and 2	Directs flow of excess potable or waste water to No. 1 and No. 2 overboard pressure-relief valves.	1 and 2	
	1	Directs flow of excess potable or waste water to No. 1 overboard pressure-relief valve.	1	
	OFF	Shuts off flow of excess potable and waste water to No. 1 and No. 2 overboard pressure-relief valves.		
	2	Directs flow of excess potable or waste water to No. 2 overboard pressure-relief valve.	2	
10	SPARE	No function.		
11	WASTE TANK SERVICING SHUTOFF valve		WASTE WATER DRAIN indicator	
	ON	Permits flow of water into waste tank from ground servicing connection.	OPEN	

Table 1-45. ECS Component Panels (Cont)

Key	Nomenclature	Function	Instructor Visibility	Remarks
	OFF	Shuts off flow of water into waste tank from ground servicing connection.		
12	WASTE WATER S/M SHUT-OFF valve		POTABLE WATER RELIEF indicator	
	ON	Permits flow of water from fuel cells into waste water tank when relief valve differential pressure reaches 6.0±0.5 psi.		
	OFF	Shuts off flow of water from fuel cells to differential pressure relief valve and waste water tank.		
13	H_2O ACCUMULATOR valves		WATER ACCUMULATOR indicators	
	Valve 1		SELECTOR A	
	MAN	Routes regulated oxygen (100±10 psig) to No. 1 cyclic accumulator, bypassing solenoid shutoff valve.	BYPASS	
	OFF	Shuts off regulated oxygen to solenoid shutoff valve and bypass line to No. 1 cyclic accumulator.		
	RMTE	Routes regulated oxygen to solenoid shutoff valve to No. 1 cyclic accumulator.	SOL	
	Valve 2		SELECTOR B	
	MAN	Routes regulated oxygen (100±10 psig) to No. 2 cyclic accumulator, bypassing solenoid shutoff valve.	BYPASS	
	OFF	Shuts off regulated oxygen to solenoid shut-off valve and bypass line to No. 2 cyclic accumulator.		
	RMTE	Routes regulated oxygen to solenoid shutoff valve of No. 2 cyclic accumulator.	SOL	
14	WATER SUPPLY valve		POTABLE WATER-DIVERTER lt	
	HOT	Directs hot water (154±4° F) from hot water heater to food reconstitution nozzle.	HOT	

Table 1-45. ECS Component Panels (Cont)

Key	Nomenclature	Function	Instructor Visibility	Remarks
	COLD	Directs cold water (50°F) from water chiller to food reconstitution nozzle.	COLD	
15	GLYCOL ACCUMULATOR valve		GLYCOL ACCUM ISOLATION lt	
	(ON) CCW	Permits flow of water-glycol from system to water-glycol accumulator.	OPEN	
	OFF	Shuts off flow of water-glycol from system to water-glycol accumulator.		
16	DRINKING WATER SUPPLY valve		POTABLE WATER-DRINKING indicator	
	ON	Permits flow of potable water to water delivery unit.	DEMAND	
	OFF	Shuts off flow of potable water to water delivery unit.		
17	Deleted		THERM RET OPEN lt	No function; control deleted from SE-012 AMS SCM
18	Cabin blower valve	Manually operated shutter for adjusting direction of cabin blower airflow.	CABIN BLO CLOS indicator 1 and 2	
19	GLYCOL RESERVE valve		GLYCOL PUMP BYPASS indicator	
	ON	Permits flow of water-glycol from reservoir into system.	OPEN	
	OFF	Shuts off flow of water-glycol from reservoir into system.		
20	GLYCOL PRESS RELIEF BYPASS valves		GLYCOL SHUT-OFF-VALVES-RELIEF indicators	
	Valve 1			
	ON	Permits flow of water-glycol to No. 1 water-glycol pressure-relief valve.	1 OPEN	
	OFF	Shuts off flow of water-glycol to No. 1 water-glycol pressure-relief valve.		
	Valve 2			
	ON	Permits flow of water-glycol pressure-relief valve.	2 OPEN	

Table 1-45. ECS Component Panels (Cont)

Key	Nomenclature	Function	Instructor Visibility	Remarks
	OFF	Shuts off flow of water-glycol to No. 2 water-glycol pressure-relief valve.		
21	CO_2 and odor absorber diverter valve	Indicates which one of two canisters is in circuit suit.	SUIT CIRCUIT-CO_2 ABS 1 and 2 indicator lt	Units are not functional within system.
22	GLYCOL RESERVOIR - BYPASS valve		GLYCOL SHUT-OFF VALVES - RESERVOIR indicator	
	OPEN	Opens bypass line permitting flow around water-glycol reservoir.	BYPASS OPEN	
	CLOSE	Closes bypass line that permits flow around water-glycol reservoir.		
23	GLYCOL RESERVOIR - OUTLET valve		GLYCOL SHUT-OFF VALVES - RESERVOIR indicator	
	OPEN	Permits flow of water-glycol from outlet of reservoir into system.	OUTLET OPEN	
	CLOSE	Shuts off flow of water-glycol from outlet of reservoir into system.		
24	SUIT CIRCUIT RETURN AIR CHECK VALVE		Repeater indicator	
	O	Permits flow of cabin gases to enter suit circuit for processing.	OPEN	
	C	Provides isolation between suit circuit and cabin atmosphere and will prevent contamination of suit circuit.		
25	GLYCOL RESERVOIR - INLET valve		GLYCOL SHUT-OFF VALVES - RADIATOR indicator	
	OPEN	Permits flow of water-glycol from system into reservoir.	RETURN OPEN	
	CLOSE	Shuts off flow of water-glycol from system into reservoir.		
26	GLYCOL TO RAD valve		GLYCOL SHUT-OFF VALVES - RADIATOR indicator	
	OPEN	Permits flow of water-glycol from C/M into space radiators in S/M	INLET OPEN	

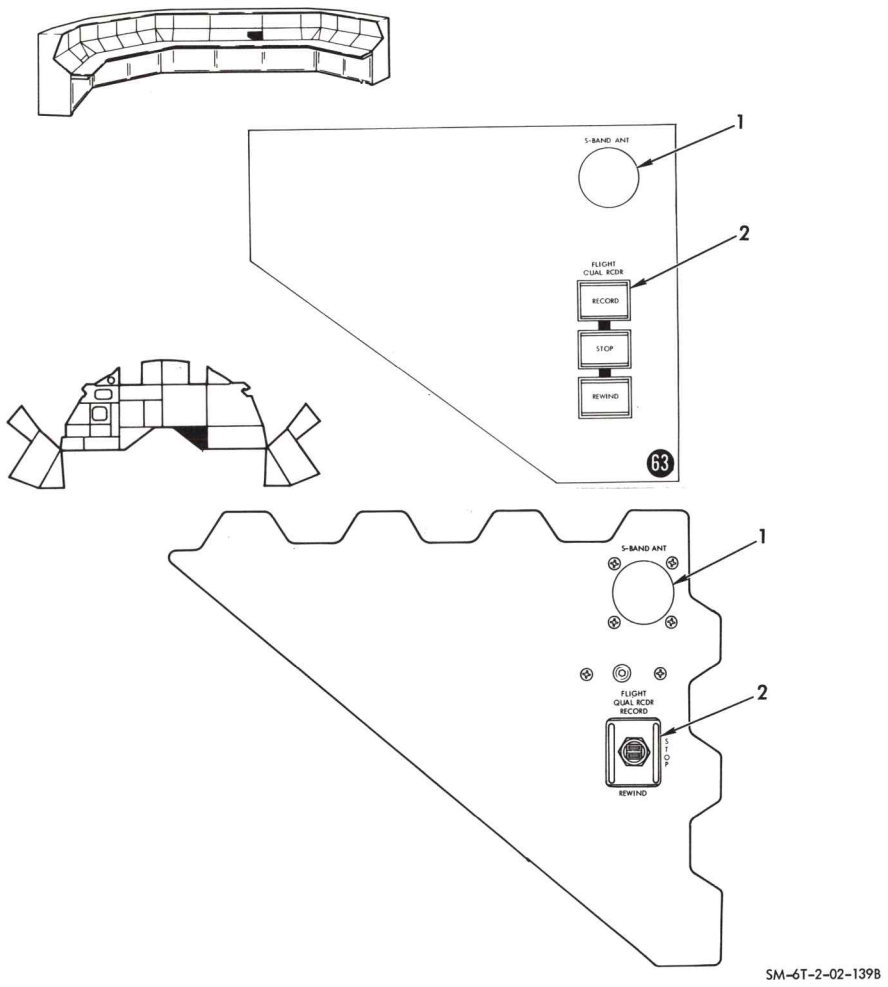

Figure 1-29. Antenna Control System Panel (Spacecraft Panel No. 19)

Table 1-22. Antenna Control System Panel (S/C Panel No. 19)

Key	Nomenclature	Function	Instructor Visibility	Remarks
1	S-BAND ANT meter	Displays magnitude of received USBE-AGC signal.	Repeater meter	
2	FLIGHT QUAL RCDR sw			
	RECORD	Activates flight qualification recorder to record flight qualification instrumentation data.	Repeater lt	Flight qualification recorder not included in AMS configuration.
	STOP	Deactivates flight qualification recorder.	Repeater lt	
	REWIND	Activates flight qualification recorder in reverse direction to rewind tape.	Repeater lt	

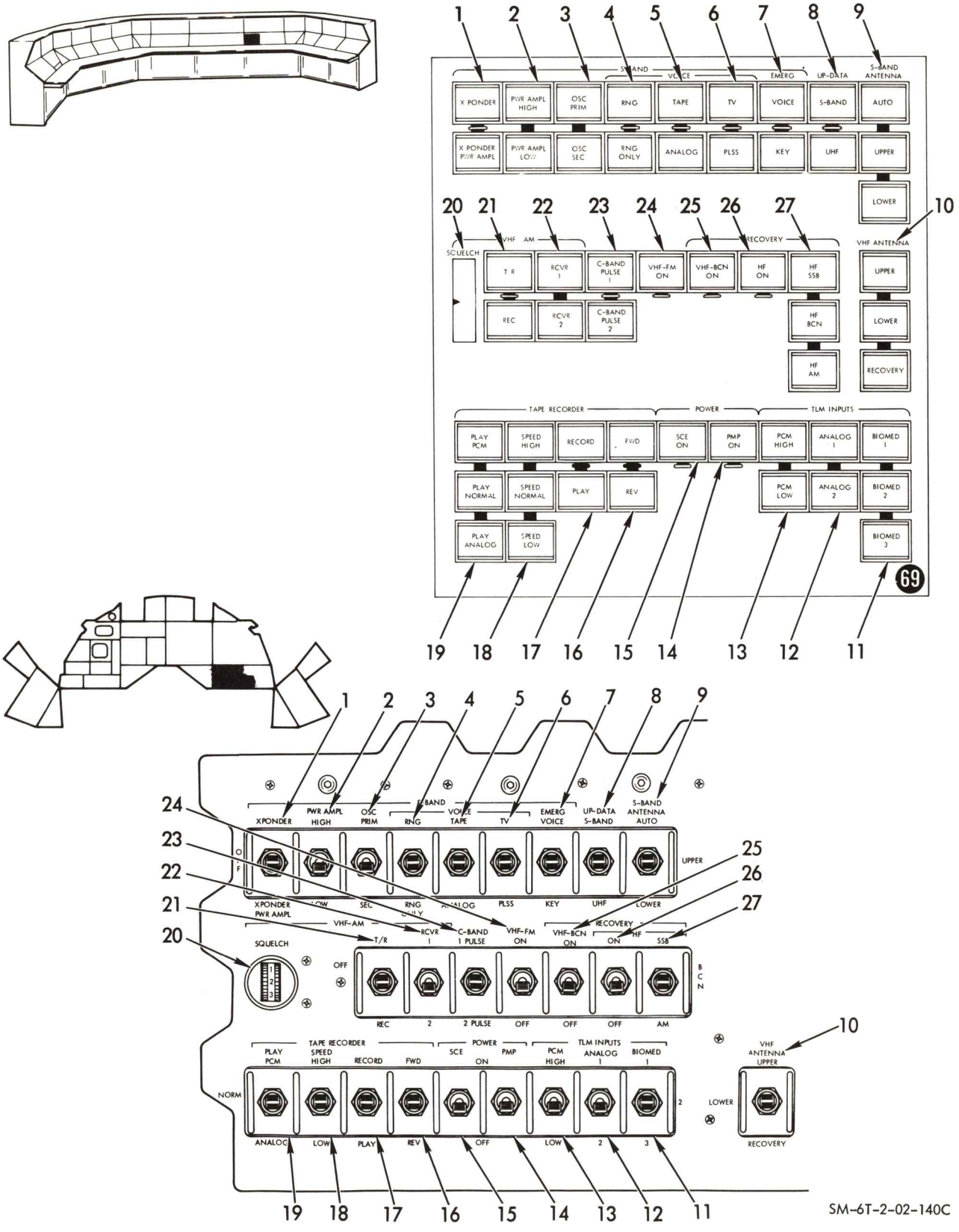

Figure 1-30. Communications Control Subpanel (Spacecraft Panel No. 20)

1.3.1.19 S/C Panel No. 20.

Figures 1-30 and 1-31 illustrate the SCM equivalent of S/C panel No. 20 and its associated IOS repeater panels. The controls on this panel are associated with the communication, instrumentation, and the service propulsion system simulation.

Tables 1-23 and 1-24 define the function and instructor visibility to the setting of each of the controls.

Table 1-23. Communications Control Subpanel (S/C Panel No. 20)

Key	Nomenclature	Function	Instructor Visibility	Remarks
1	S-BAND sw XPONDER - OFF - XPONDER PWR AMPL sw			
	XPONDER	Activates USBE transponder and applies power to S-BAND ANTENNA sw.	Repeater lt	Power output is 200 milliwatts in this mode.
	OFF	Removes power from transponder; removes power from S-BAND ANTENNA sw.		
	XPONDER PWR AMPL	Activates USBE transponder, applies power to S-BAND PA and S-BAND ANTENNA sw.	Repeater lt	Power output in this mode governed by position of PWR AMPL sw.
2	PWR AMPL sw			
	HIGH	Selects 20-watt output mode of S-BAND PA.	Repeater lt	PWR AMPL is effective only when XPONDER - OFF XPONDER PWR AMPL sw is in XPONDER PWR AMPL position.
	LOW	Selects 5-watt output mode of S-BAND PA.	Repeater lt	
3	OSC sw			
	PRIM	Selects primary oscillator for use with USBE transmitter.	Repeater lt	
	SEC	Selects secondary oscillator for use with USBE transmitter.	Repeater lt	
4	VOICE			
	RNG - RNG ONLY sw			
	RNG	Selects ranging, PCM telemetry, and voice modes in PMP.	Repeater lt	
	OFF	None.		
	RNG ONLY	Selects voice mode in PMP; selects ranging and PM modes in USBE.	Repeater lt	
5	VOICE			
	TAPE - ANALOG sw			
	TAPE	Selects tape, voice, and PCM telemetry modes in PMP; selects FM mode in USBE	Repeater lt	
	OFF	None.		
	ANALOG	Selects real time analog data, voice, and PCM telemetry in PMP; selects FM mode in USBE.	Repeater lt	

1.3.6 SIMULATOR CONTROLS AND DISPLAYS.

Those IOS controls and displays that are other than spacecraft repeater instruments can be generally identified in two groups.

- Those controls and displays used by the instructor-operator to operate the simulator and monitor the status of simulator systems.
- Those displays, other than repeater instruments (and previously described supplementary displays), that are used by the instructor-operator to monitor crew activities.

The IOS panels containing such simulator controls and displays are identified in the following illustration. Controls and indicators located thereon are functionally described in the associated tables.

1.3.6.1 Simulator Status Panel (Panel 48).

Status indicators located on the IOS provide a gross and rapid verification of all significant AMS components and subsystems. This panel is illustrated in figure 1-55. The function of each indicator is listed in table 1-46.

1.3.6.2 Simulator Control Panel (Panel 46).

The controls located on the simulator control panel, illustrated in figure 1-56, permit the instructor to perform the following:

- Start or stop the simulated mission at any point.
- Reset, then restart, the simulated mission at specific points.
- Advance the mission to a new point at accelerated time.
- Store parameters representing initial conditions into memory.
- Control the X-T records.

The functions of each control and indicator on this panel are described in table 1-47.

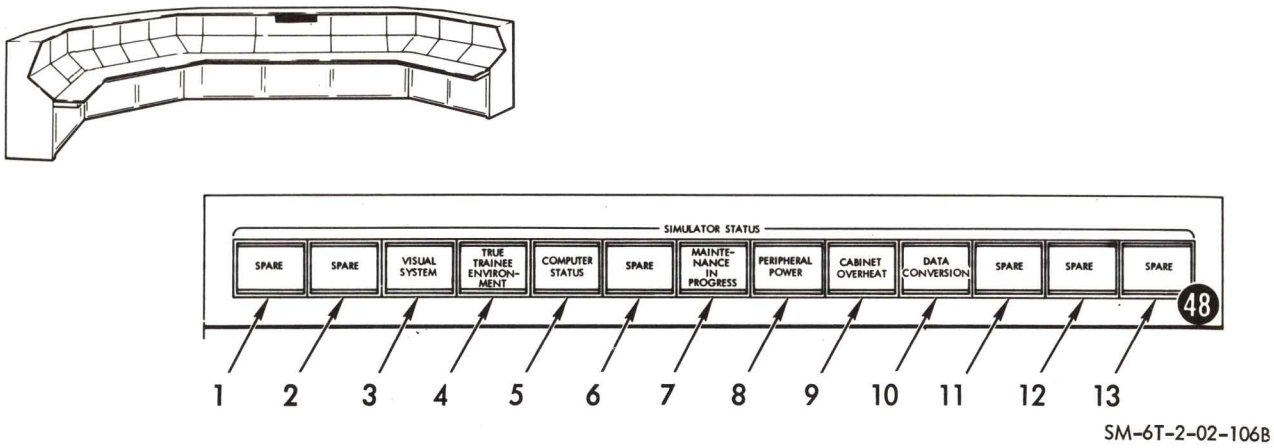

Figure 1-55. Simulator Status Panel

Table 1-46. Simulator Status Panel

Key	Nomenclature	Function	Remarks
	SIMULATOR STATUS		
1	SPARE		
2	SPARE		
3	VISUAL SYSTEM lt	When on, indicates malfunction in window display and SXT/SCT.	Provides a summary indication of the displays on IOS panel No. 1.
4	TRUE TRAINEE ENVIRONMENT lt	When on, indicates malfunction in trainee environment systems.	Indicates low air flow and/or excessive cabin outlet or suit inlet air temperature.
5	COMPUTER STATUS lt	When on, indicates any computer is off or in HALT condition	
6	SPARE		
7	MAINTENANCE IN PROGRESS lt	Indicates maintenance is being performed on AMS.	Activated manually by maintenance crew at power cabinets.
8	PERIPHERAL POWER lt	Indicates malfunction in power supplies to peripheral equipment.	
9	CABINET OVERHEAT lt	Indicates insufficient cooling in cabinets.	Accompanied by warning horn at IOS and unit 34.
10	DATA CONVERSION lt	Indicates malfunction in power supplies for data conversion equipment (DCE).	
11	SPARE		
12	SPARE		
13	SPARE		

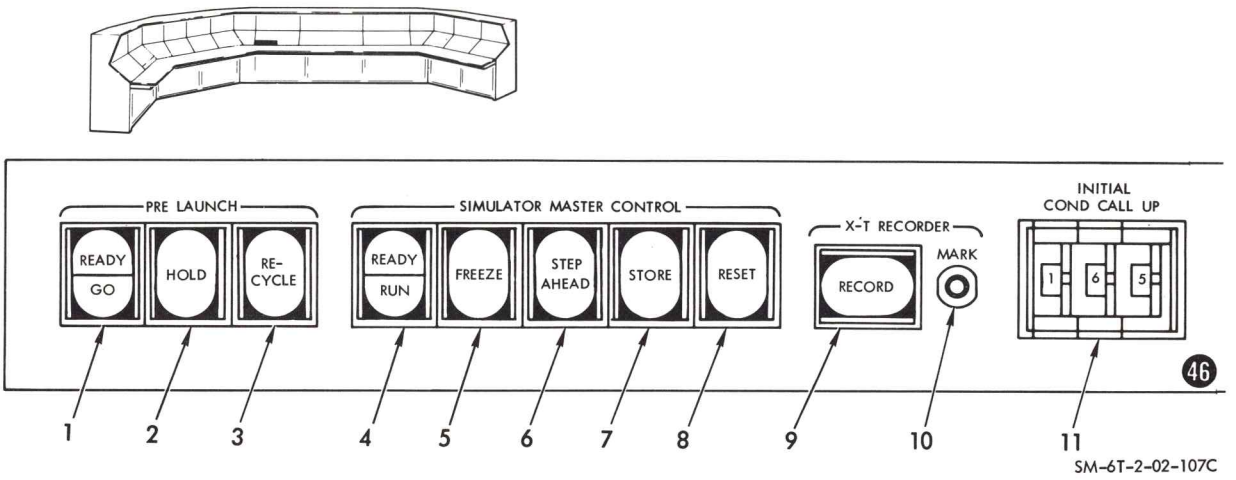

Figure 1-56. Simulator Control Panel

Table 1-47. Simulator Control Panel

Key	Nomenclature	Function	Remarks
1	PRELAUNCH READY/GO sw-lt	Split-level indicator. Switch action illuminates READY lt and issues go command to computer. Computer signal extinguishes READY lt and illuminates GO lt when mission is in go condition.	
2	HOLD sw-lt	Will inhibit dynamic simulation at point of depression. Real time simulation (procedural) not involving integrations can be accomplished. Malfunctions may be inserted through either MIU or C/B. To/from launch clocks are stopped.	
3	RECYCLE sw-lt	Will remove inhibit impressed by HOLD function and reset dynamic simulation to T - 60-second point. Initiation of simulation returns to GO function.	
4	SIMULATOR MASTER CONTROL READY/RUN sw-lt	Split-level indicator. Depressing sw enters run command to computer and illuminates READY lt. Computer signal extinguishes READY lt and illuminates RUN lt when mission is in run condition.	
5	FREEZE sw-lt	Stops all simulation. No real time nor dynamic simulation capabilities exist in this state.	
6	STEP AHEAD sw-lt	Enables simulation to step ahead to prescribed point in time, as specified, at other than real time rates.	
7	STORE sw-lt	Enables recording of set block of memory (parameters) to be used on new reset (start) point.	
8	RESET sw-lt	Causes computer to read in initialization parameters as defined by INITIAL CONDITION CALL UP thumbwheels. At completion of this function, trainer is returned to freeze condition.	
9	X-T RECORDER - RECORD sw-lt	Pertains to X-T recorders. Permits individual control of X-T recorders from their separate panels. When depressed (OFF), overrides individual controls and places X-T recorders in standby.	
10	Mark P/B	Places a mark alongside each parameter being recorded on the X-T recorder.	
11	INITIAL COND CALL UP thumbwheels	Three octal thumbwheel digiswitches that select set of initial conditions to which AMS is reset.	

1.3.6.3 Lighting Controls.

The individual work stations for the IOS are provided with console lighting controls. Console lighting fixtures are recessed in the hood areas overhead, providing floodlighting through styrene diffuser panels. Six control panels, one of which is illustrated in figure 1-57, are provided for variable control of floodlighting and panel lights. These are functionally described in table 1-48.

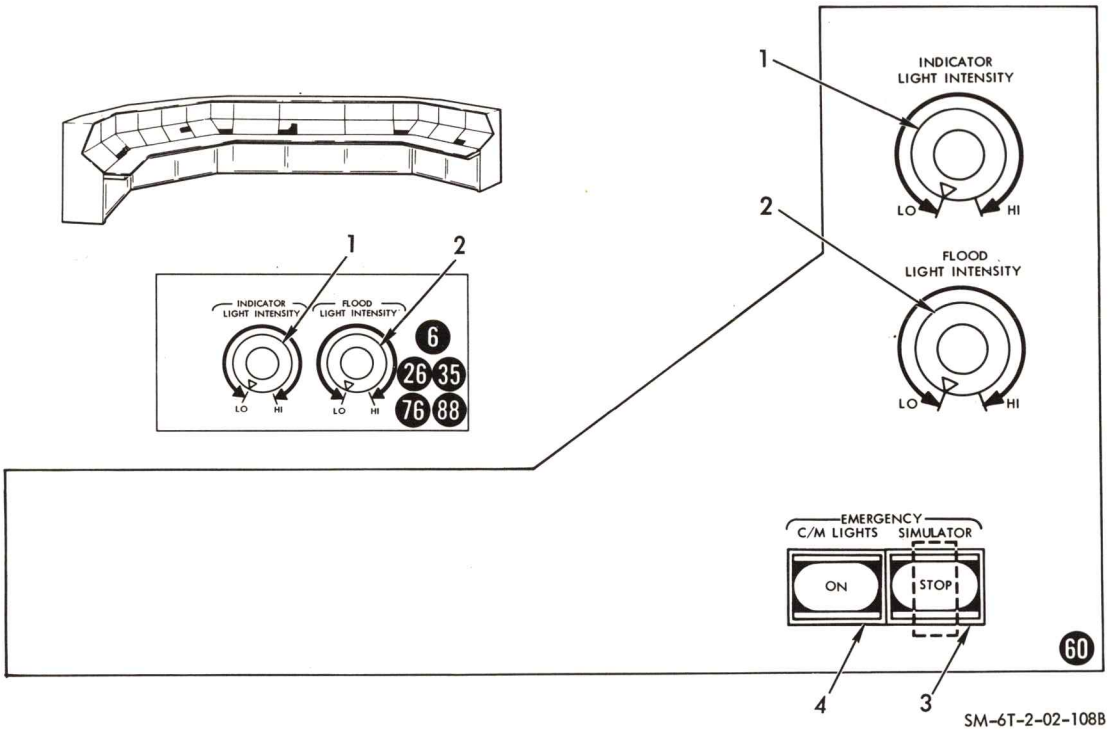

Figure 1-57. Lighting Control Panel

Table 1-48. Lighting Control Panel

Key	Nomenclature	Function	Remarks
1	INDICATOR LIGHT INTENSITY control	Variable control for lt intensity setting.	
2	FLOOD LIGHT INTENSITY control	Varies intensity of overhead lighting.	
3	EMERGENCY SIMULATOR - STOP sw-lt	Causes trainer to perform emergency shutdown process.	
4	EMERGENCY - C/M LIGHTS - ON sw-lt	Provides egress lighting within SCM in event of power loss.	

1.3.6.4 Performance Timers.

Each of the three instructor stations is equipped with a bidirectional timer, as illustrated in figure 1-58. These are intended for use by the instructor-operators in timing various crew activities and simulated events. A functional description of the performance timer is provided in table 1-49.

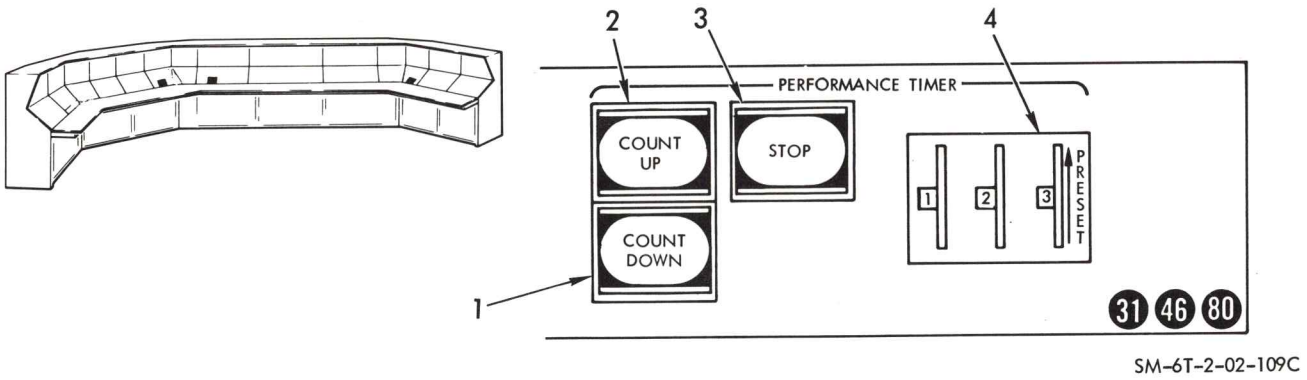

Figure 1-58. Performance Timer Panel

Table 1-49. Performance Timer Panel

Key	Nomenclature	Function	Remarks
	PERFORMANCE TIMER		
1	COUNT DOWN sw-lt	Depressing sw-lt causes counter to count down from variable setting.	
2	COUNT UP sw-lt	Depressing sw-lt causes counter to count up from variable setting.	
3	STOP sw-lt	Stops counter.	
4	Digital thumbwheel	Provides control for setting of desired time from 0 to 999. Indicates elapsed time from initial setting.	

1.3.6.5 Computer Status Panel.

The computer status panel, illustrated in figure 1-59, provides the instructor with an indication of the status of the peripheral equipment associated with the computer system. Table 1-50 provides a functional description of each indicator on this panel.

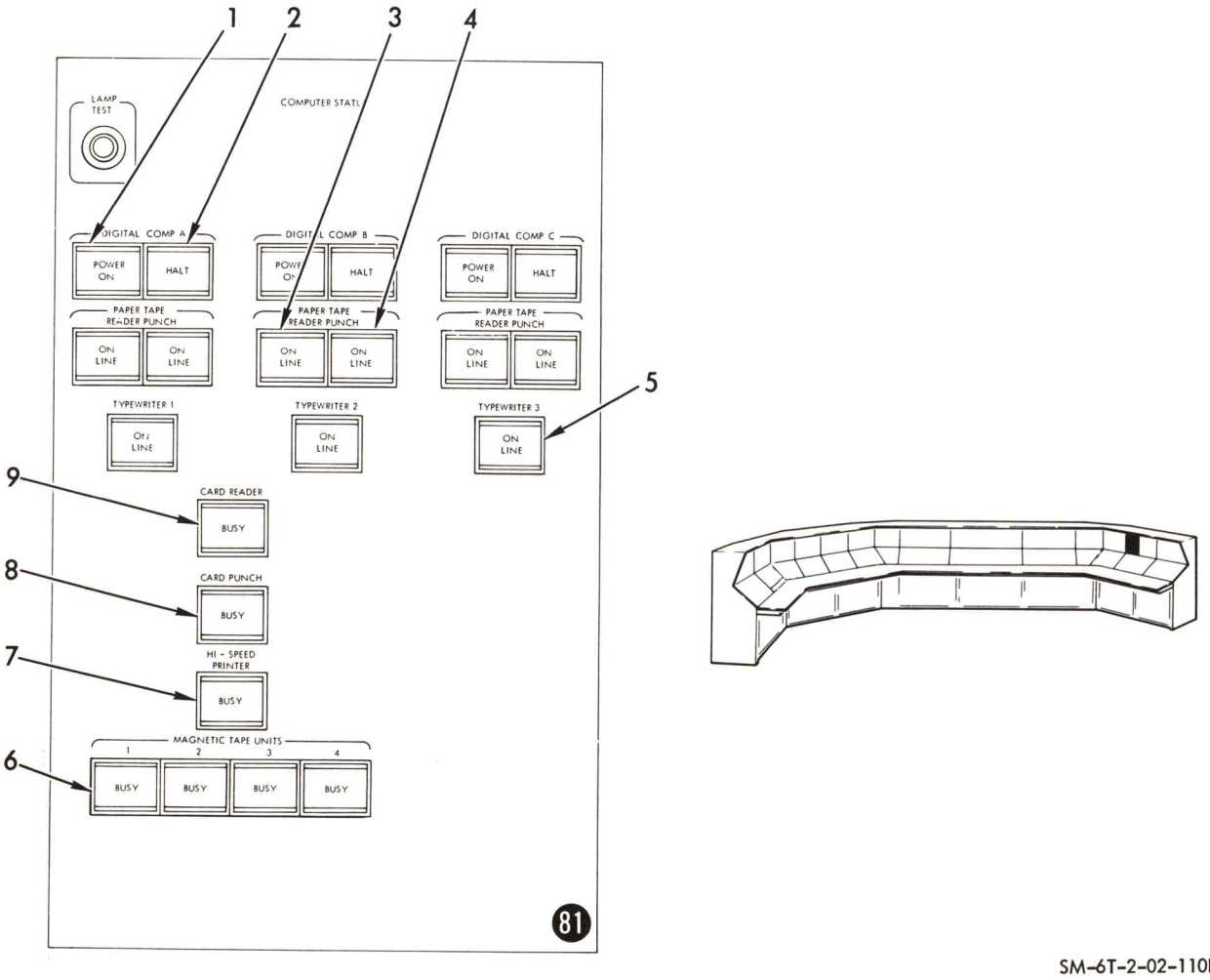

Figure 1-59. Computer Status Panel

Table 1-50. Computer Status Panel

Key	Nomenclature	Function	Remarks
1	DIGITAL COMP POWER ON lt	Indicates power has been applied to related computer.	
2	DIGITAL COMP HALT lt	Indicates related computer is in halt mode.	
3	PAPER TAPE-READER - ON LINE lt (3)	Indicates paper tape reader is being used by program.	Only computer C tape reader/punch on-line indicator operational on SE-012.
4	PAPER TAPE-PUNCH - ON LINE lt (3)	Indicates paper tape punch is being used by computer program.	Same as item 3.
5	TYPEWRITER 1, 2, AND 3 - ON LINE lt	Indicates related typewriter is being used by program.	
6	MAGNETIC TAPE UNITS - 1, 2, 3, AND 4 - BUSY lt	Indicates related magnetic tape unit (MTU) is being used by program.	Not operational on SE-012.
7	HI-SPEED PRINTER - BUSY lt	Indicates printer is being used by program.	Not operational on SE-012.
8	CARD PUNCH-BUSY lt	Indicates punch is being used by program.	Not operational on SE-012.
9	CARD READER-BUSY lt	Indicates card reader is being used by program.	Not operational on SE-012.

1.3.6.6 Recorder and Plotter Panel.

The instructor is provided with remote control of the X-Y and X-T plotters. Figure 1-60 illustrates the panel which enables this control. In addition to the pen recorders, controls are also included for the IOS audio tape recorder. This instrument, independent of the S/C data storage equipment (DSE), allows continuous recording of a complete training exercise. Functional descriptions of the controls and indicators on this panel are listed in table 1-51.

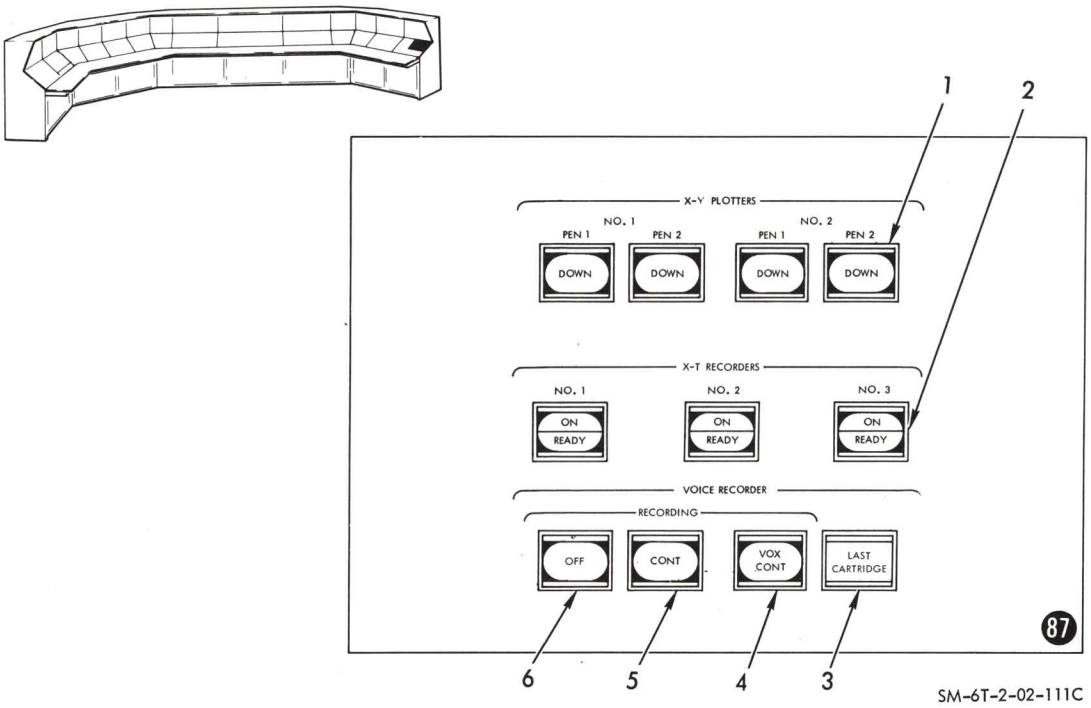

Figure 1-60. Recorder and Plotter Panel

Table 1-51. Recorder and Plotter Panel

Key	Nomenclature	Function	Remarks
1	X-Y PLOTTERS-NO. 1 AND NO. 2 - PEN 1 AND PEN 2 - DOWN sw-lt	Places recorder pens on writing surface.	
2	X-T RECORDERS NO. 1, NO. 2 and NO. 3 - READY sw-lt	Stops recorder operation.	Operates in conjunction with X-T RECORDER sw-lt on panel No. 46.
	X-T RECORDERS NO. 1, NO. 2 and NO. 3 - ON sw-lt	Permits remote start of recorder operation.	
3	VOICE RECORDER - LAST CART lt	Indicates audio tape recorder is using last available empty cartridge.	
	VOICE RECORDER - RECORDING		
4	VOX CONT sw-lt	Enables audio tape recorder to operate in conjunction with voice-operated relay.	
5	CONT sw-lt	Provides continuous recording on audio tape recorder.	
6	OFF sw-lt	Provides power control for KRS audio tape recorder.	

1.3.6.7 True Trainee Environment Panel.

This panel provides the instructor-operator with both monitor and control capability for the environmental conditions for the suits at each of the three SCM stations and the SCM cabin. Indicators and controls are for the actual environment and are completely independent of the simulated environmental control system (ECS). Also included are instructor-operator controls for the simulator smoke generator system and the aural simulation system.

The aural cue simulation system reproduces those characteristic sounds of an Apollo mission that are external to communications and sounds normally heard in the headsets. These sounds are produced in a speaker in the SCM as a function of the event and timer under program control. A talk-back indicator displaying noise level is provided on the IOS. The instructor may override the program and manually control the decibel level of noise within the SCM. With the exception of an ON-OFF control, the instructor has no other inputs to the aural cue system. Figure 1-61 illustrates the controls and display, and table 1-52 provides a functional description of each control and display.

The smoke generator system contains a nontoxic liquid smoke, a heater unit, and an auxiliary blower. Smoke is produced by heating the liquid smoke and ducting it through the AMS environmental control system air conditioning ducts. This function is under program control with instructor override to inhibit smoke generation. Initiation of the smoke generator system can be accomplished manually through the MIU in conjunction with specific malfunctions. Controls for this system are depicted in figure 1-61 and functionally described in table 1-52.

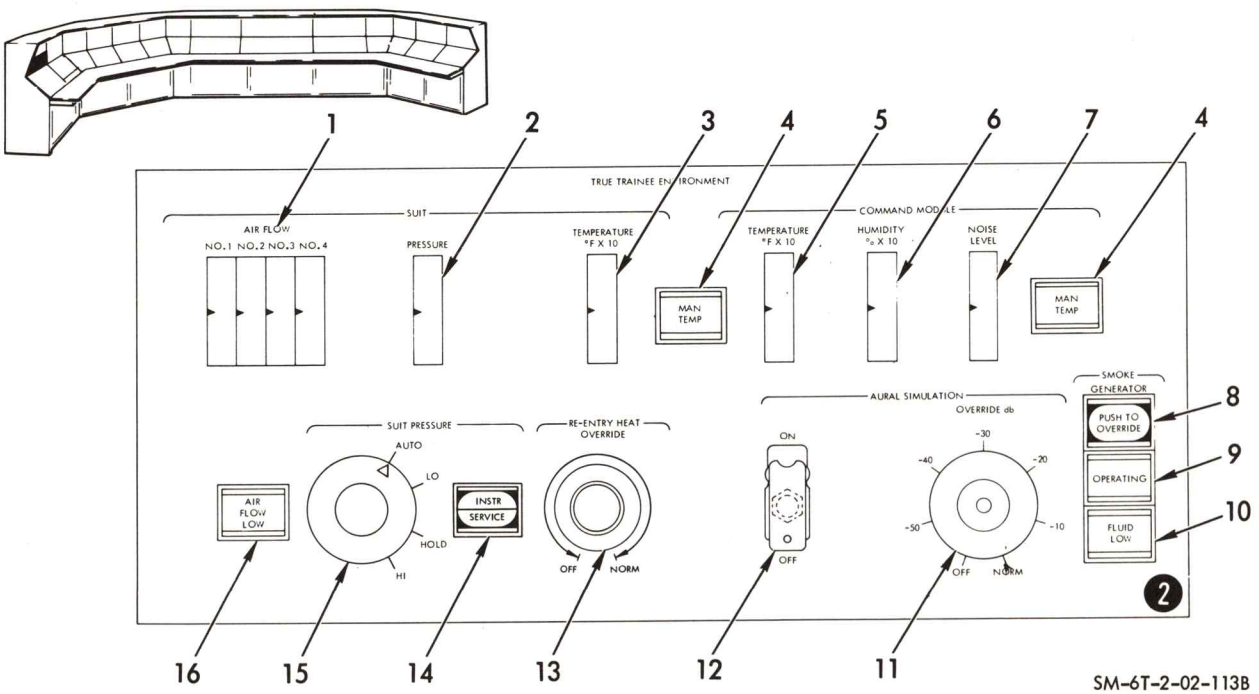

Figure 1-61. True Trainee Environment Panel

Table 1-52. True Trainee Environment Panel

Key	Nomenclature	Function	Remarks
1	SUIT-AIR FLOW - NO. 1, NO. 2, NO. 3, and NO. 4 meters	Indicates actual air flow through each pressure suit.	No. 4 meter not implemented on SE-012.
2	SUIT-PRESSURE meter	Indicates suit pressure at suit inlet manifold.	
3	SUIT-TEMPERATURE °F X10 meter	Indicates temperature at suit inlet manifold.	
4	MAN TEMP lt	Indicates cabin and/or suit temperature control transferred from computer to manual control.	Used during calibration or maintenance. Controlled from environmental control panel on SCM base.
5	COMMAND MODULE - TEMPERATURE °F x 10 meter	Indicates actual SCM temperature.	
6	COMMAND MODULE - HUMIDITY % x 10 meter	Indicates actual SCM humidity.	
7	COMMAND MODULE - NOISE LEVEL meter	Indicates actual SCM noise.	
8	SMOKE GENERATOR - PUSH TO OVERRIDE sw-lt	Prevents operation of smoke generator when depressed.	
9	SMOKE GENERATOR - OPERATING lt	Indicates that smoke generator is operating	
10	SMOKE GENERATOR FLUID LOW lt	Indicates low-liquid smoke level for smoke generator.	
11	AURAL SIMULATION - OVERRIDE db control	Overrides computer initiated aural simulation. Blue lt in center illuminates when knob is not in normal position.	
12	AURAL SIMULATION - ON OFF sw	Provides manual activation of aural simulation controls.	
13	RE-ENTRY HEAT OVERRIDE control	Provides a remote override of computer-controlled SCM cabin temperature.	
14	SUIT PRESSURE - INSTR - SERVICE sw-lt	Alternate-action split-level sw-lt indicating whether instructor or maintenance personnel has control of suit pressure system.	Duplicate controls on SCM base enable service personnel to take control of system.
15	SUIT PRESSURE sw		
	AUTO	Provides automatic control of suit pressure system by computer.	
	LO	Provides 0.5 psig suit inlet pressure.	
	HOLD	Provides control for holding suit pressure at any point between 0.5 and 5.0 psig.	Desired pressure is obtained by using HI or LO sw.
	HI	Provides 5.0 psig suit inlet pressure.	
16	AIR FLOW LOW lt	Indicates air flow through suit circuits is below normal.	

1.3.6.8 Visual Systems Status Display.

This panel provides operational status and malfunction detection data on the visual systems to the instructor-operator. The panel is illustrated in figure 1-62, and each indicator is functionally described in table 1-53.

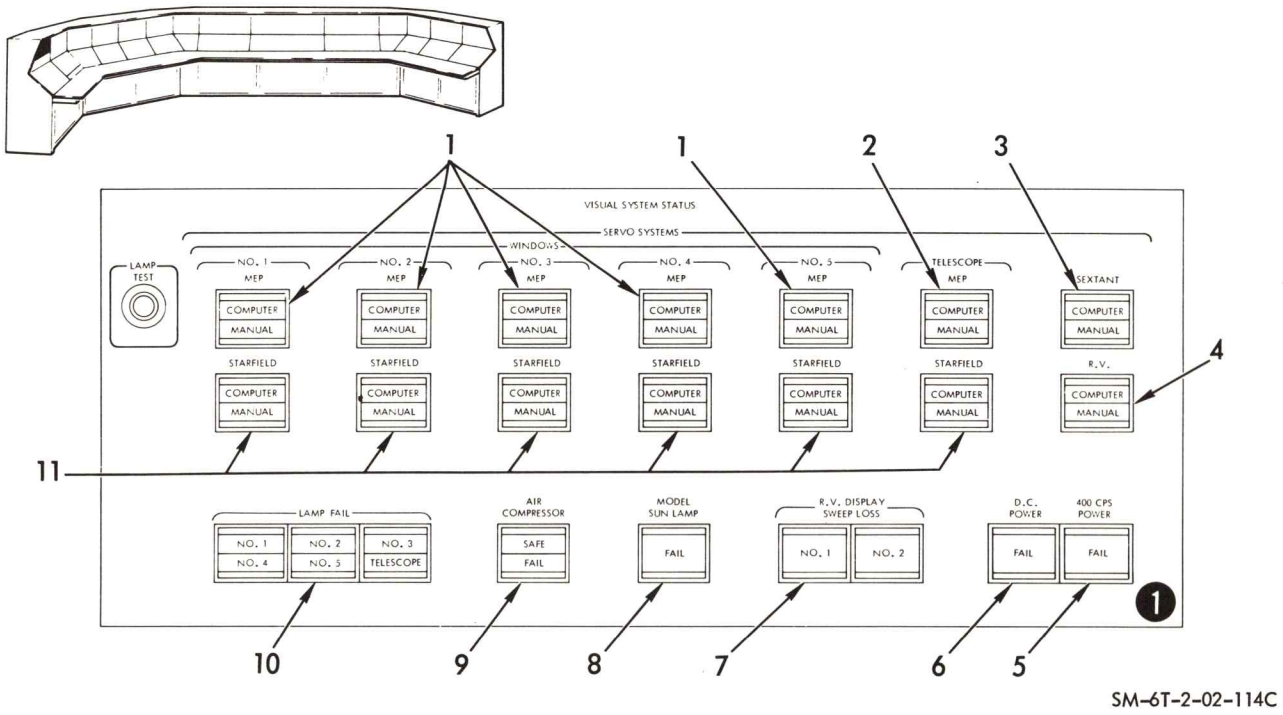

Figure 1-62. Visual System Status Panel

Table 1-53. Visual System Status Panel

Key	Nomenclature	Function	Remarks
	SERVO SYSTEMS - WINDOWS		
1	MEP COMPUTER - MANUAL lt	Indicates that associated MEP is either under computer or manual control.	Window 3 indicators not implemented except for light test on SE-012.
	SERVO SYSTEMS		
2	TELESCOPE - MEP - COMPUTER - MANUAL lt	Indicates that telescope MEP is either under computer or manual control.	
	SERVO SYSTEMS		
3	SEXTANT COMPUTER - MANUAL lt	Indicates that sextant is either under computer or manual control.	
4	R. V. - COMPUTER - MANUAL lt	Indicates that rendezvous image generator is either under computer or manual control.	
5	400 CPS POWER - FAIL lt	Indicates failure of 400-cps power supply.	
6	DC POWER FAIL lt	Indicates a failure of d-c power supply.	
7	R. V. DISPLAY SWEEP LOSS - NO. 1 and NO. 2 lt	Indicates sweep loss (failure) in rendezvous image generator systems.	
8	MODEL SUN LAMP - FAIL lt	Indicates failure of rendezvous model sun source lamp.	
9	AIR COMPRESSOR - SAFE - FAIL lt	Indicates operating status of air compressor.	
10	LAMP FAIL lt	Indicates lamp failure in each of window or telescope display systems.	
11	STARFIELD - COMPUTER - MANUAL lt	Indicates that related starfields are either under computer or manual control.	

1.3.6.9 Up-Data Link Panel.

The up-data link panel provides the instructor with the means of simulating the transmittal of up-telemetry information during a non-integrated training session. During an integrated mission, the panel accepts and routes the telemetry data received from the MSCC. In both cases, the instructor has the capability of introducing faults or inserting erroneous data.

In addition, the instructor must also use the up-data link keyboard and controls to inform the AMS computer complex as to the identity of the star or stars and landmarks that the trainee is using for navigation purposes.

The identity and function of each control and display in the up-data link panel are provided in figure 1-63 and table 1-54.

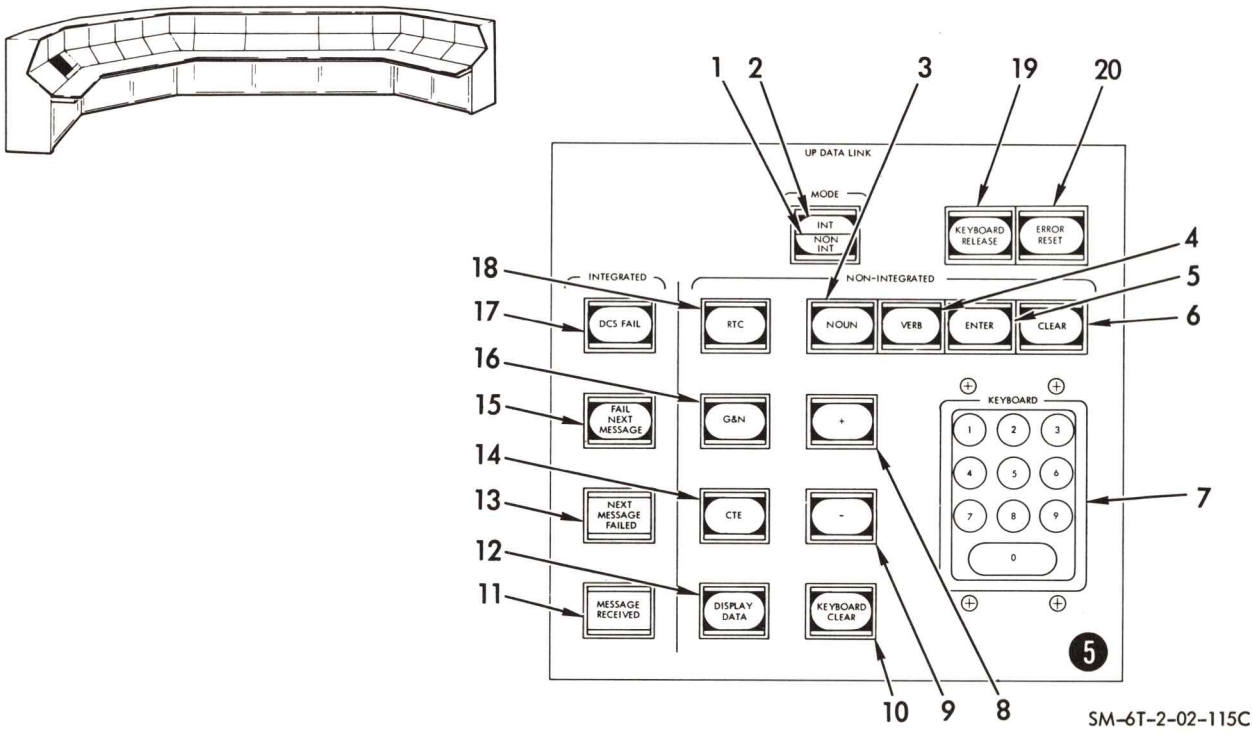

Figure 1-63. Up-Data Link Panel

Table 1-54. Up-Data Link Panel

Key	Nomenclature	Function	Remarks
	MODE		
1	NON-INT sw-lt	Permits instructor to input via keyboard panel.	
2	INT sw-lt	Enables UDL panel to operate in conjunction with IMCC.	
	NON-INTEGRATED		
3	NOUN sw-lt	Identifies word format for message.	
4	VERB sw-lt	Identifies word format for message.	
5	ENTER sw-lt	Enters up-data link (UDL) digital keyboard information into computer.	
6	CLEAR sw-lt	Clears UDL digital keyboard only.	
7	KEYBOARD momentary contact P/B	Supplies 0 to 9 decimal digits for word forming.	
	NON-INTEGRATED		
8	+ (plus) sw-lt	Algebraic code.	
9	- (minus) sw-lt	Algebraic code.	
10	KEYBOARD CLEAR sw-lt	Unlatches system selected (above) and resets UDL panel.	
	INTEGRATED		
11	MESSAGE RECEIVED lt	Indicates failed message has been transmitted more times than it has failed.	
	NON-INTEGRATED		
12	DISPLAY DATA sw-lt	Informs computer that data output is required and activates computer interface circuit.	
	INTEGRATED		
13	NEXT MESSAGE FAILED lt	Indicates that next message has been failed.	
	NON-INTEGRATED		
14	CTE sw-lt	Informs computer that upcoming message is CTE word and activates computer interface circuitry.	
	INTEGRATED		
15	FAIL NEXT MESSAGE sw-lt	Next message after sw closure will be failed. Repeated depressions indicate number of times message failed.	
	NON-INTEGRATED		
16	G&N sw-lt	Informs computer that upcoming message is G&N word and activates computer interface circuitry.	

Table 1-54. Up-Data Link Panel (Cont)

Key	Nomenclature	Function	Remarks
	INTEGRATED		
17	DCS FAIL sw-lt	Disables decoder to simulate failure to ground transmission link.	
	NON-INTEGRATED		
18	RTC sw-lt	Informs computer that upcoming message is real time command word and activates computer interface circuitry.	
19	KEYBOARD RELEASE sw-lt	Releases keyboard display.	
20	ERROR RESET sw-lt	Resets UDL panel in case of insertion of error.	

1.3.6.10 Voice Communications Interference Panel.

The controls located on this panel enable the instructor to insert noise and garble effects into voice transmission by manual control. This effect enables the simulation of space communication conditions, distance, antenna position, and spacecraft orientation. The controls are identified in figure 1-64 and the function of each control is described in table 1-55.

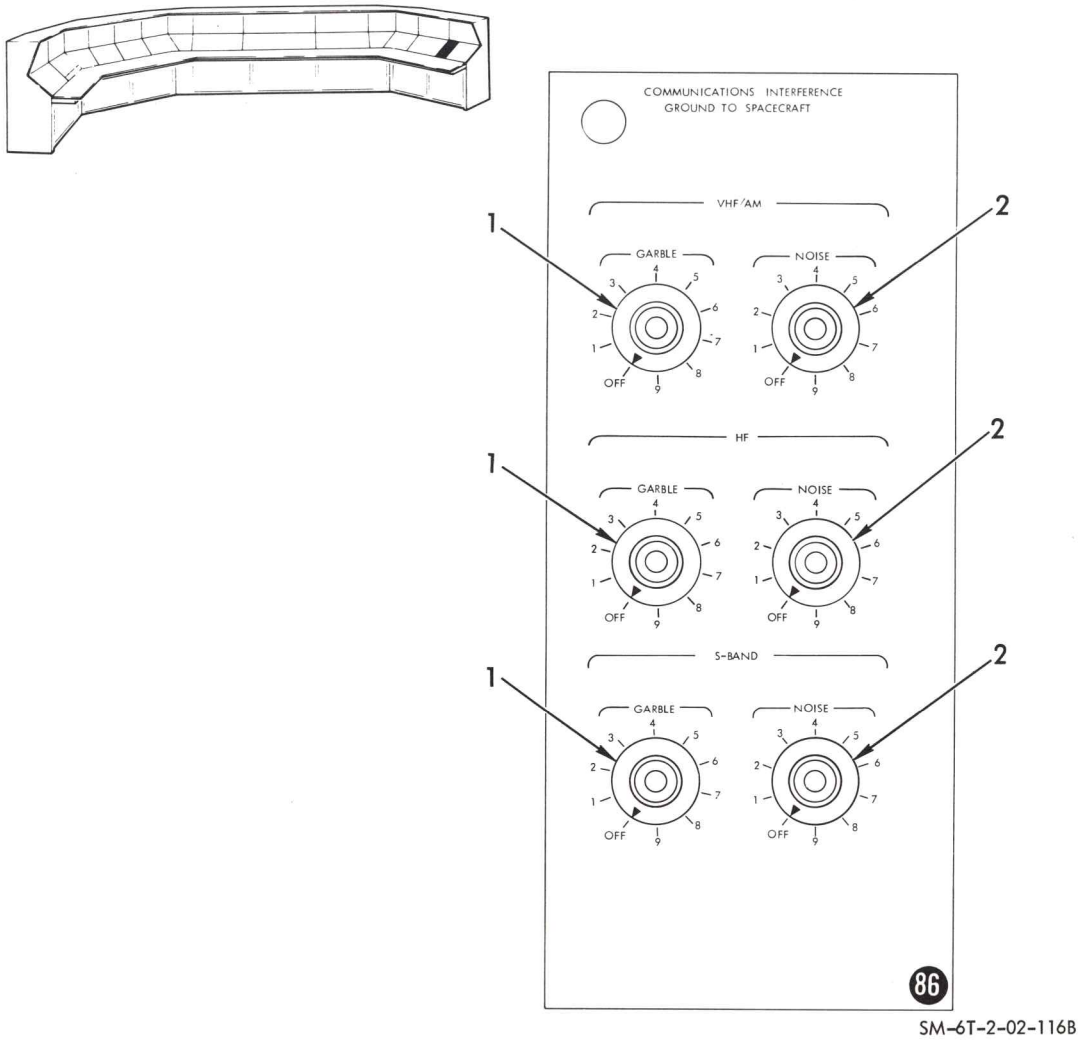

Figure 1-64. Voice Communications Interference Panel

Table 1-55. Voice Communications Interference Panel

Key	Nomenclature	Function	Remarks
1	GARBLE control	Varies amount of garble on VHF-AM, HF, or S-BAND up-link voice communications.	Blue lt in center illuminates when not in OFF position.
2	NOISE control	Varies noise level on VHF-AM, HF, or S-BAND up-link voice communications.	Same as 1.

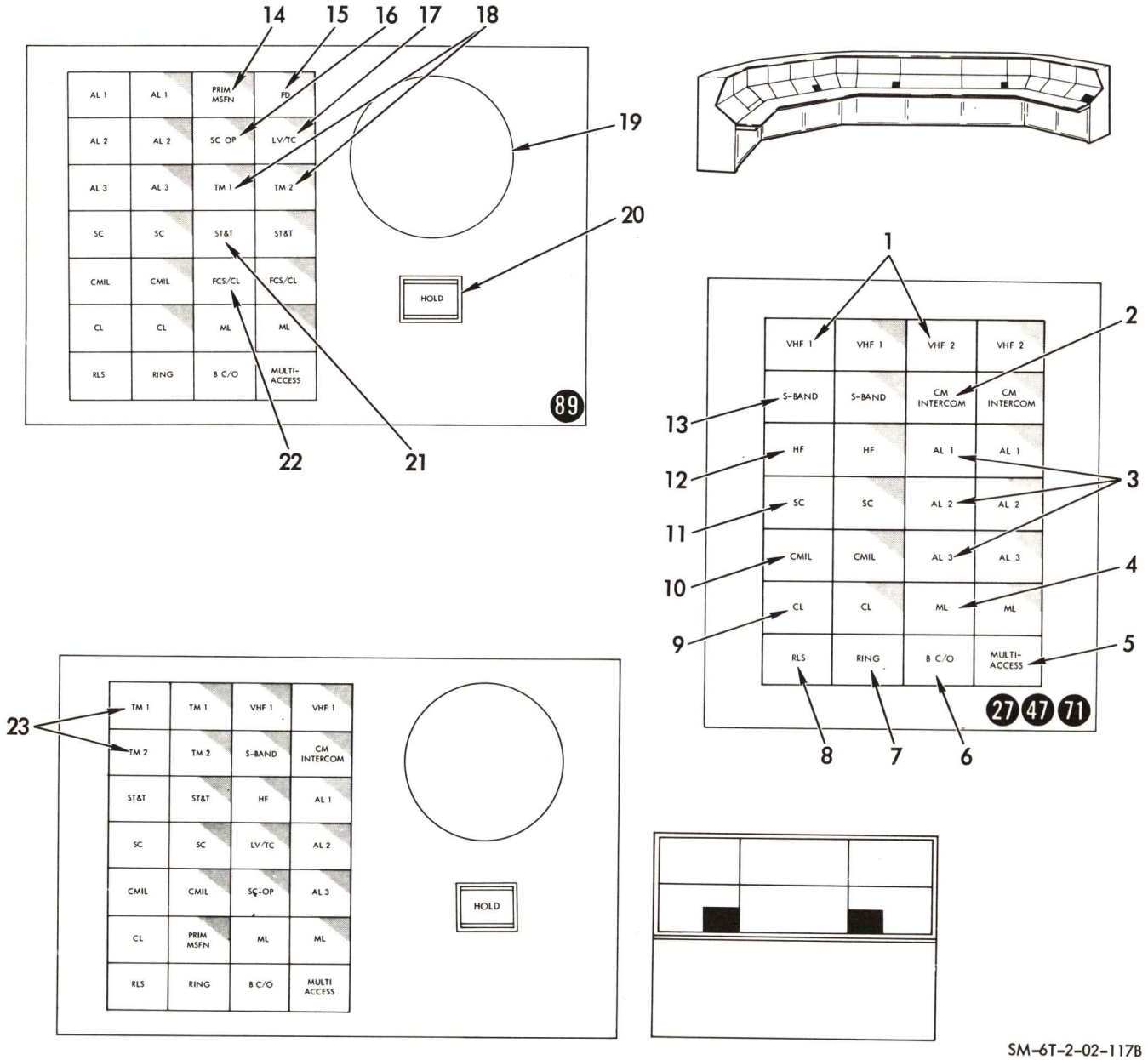

Figure 1-65. Console Communications Control System Panel

1.3.6.11 Console Communications System.

The console communications system (CCS) provides the instructor-operator at the IOS with an assortment of talk-listen loops which enable him to communicate with other AMS stations at all times and other simulators and MSCC/MSFN activities during integrated simulations.

The CCS in the AMS consists of six key-set and six trainer communications control stations. Two of these stations are located at the telemetry console, and the remaining four are mounted at the IOS. Figure 1-65 depicts the key-set stations and their related locations. Each key (switch) provides the instructor-operator with a talk-listen capability over the associated loop. The function of each key is indicated in table 1-56. The trainer communications control panels, illustrated in figure 1-66, provide local selection for backup and astro loops, volume controls, and headset jacks. The function of each of the controls shown in the figure is provided in table 1-57.

Table 1-56. Console Communications System Panels

Key	Nomenclature	Function	Remarks
		NOTE Switches with shaded corners indicate monitor circuits. Depressing provides access to associated loop and key is lighted. Any combination of monitor keys may be operated at one time.	
1	VHF 1 and 2 keys	Provides simulated RF voice transmission loop with SCM, manned spacecraft flight network (MSFN), and SCM crew stations.	
2	CM INTERCOM keys	Provides access to SCM intercommunications loop and simulates GSE hardline for prelaunch.	
3	AL (1, 2, and 3) keys	Provides communications between individual astronaut and AMS instructor.	
4	ML keys	Monitor loop key provides I/O with access to Manned Spacecraft Control Center (MSCC) and MSFN stations.	
5	MULTI-ACCESS key	Enables I/O to select up to three talk-listen keys at one time.	
6	B C/O key	Buzzer cutoff key disables buzzer operation.	
7	RING key	Establishes outgoing signaling on intersite loops after desired key has been operated.	
8	RLS key	Release key releases established talk circuit.	
9	CL keys	Computer loop provides communications between IOS and support positions.	
10	CMIL keys	Command module instructor's loop provides conferencing capability between instructors.	
11	SC keys	Simulator conference loop provides conferencing between AMS instructors and simulation control area (SCA) instructors during integrated training.	
12	HF keys	Provides simulation of RF voice transmission loop with SCM and MSFN stations.	
13	S-BAND keys	Provides simulated duplex voice transmission between SCM and MSFN stations.	
14	PRIM MSFN key	Prime MSFN loop provides monitoring capability of entire MSFN range.	
15	FD key	Flight director loop provides monitoring capability of flight director.	
16	SC OP key	Spacecraft operations loop provides AMS instructor with monitoring capabilities of simulated activities of blockhouse spacecraft test conductor personnel.	

Table 1-56. Console Communications System Panels (Cont)

Key	Nomenclature	Function	Remarks
17	LV/TC key	Launch vehicle-test conductor loop provides monitoring capabilities of launch vehicle test conductor.	
18	TM (1 and 2) keys	Telemetry keys provide monitoring capabilities of telemetry conference loops.	
19	DIAL	Not used. Growth capability which allows for future use of telephone dial.	
20	HOLD key	Enables hold of any talk-listen key selected.	
21	ST&T keys	Simulation tracking and trajectory loop provides conferencing capability between AMS instructors and simulation control area (SCA).	
22	FCS/CL key	Flight crew simulator computer loop provides conferencing capability for coordinating AMSC and MSCC computer operations.	
23	TM (1 and 2) keys	Telemetry loops provide conferencing capability between AMS telemetry console operators and MSCC operators.	

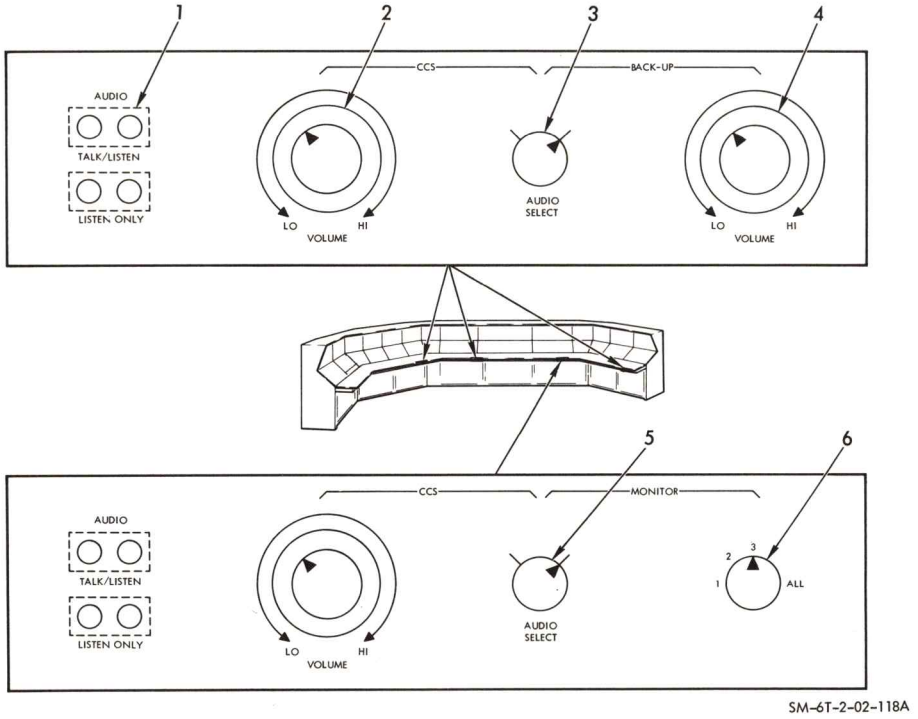

Figure 1-66. Communications Control Panel

Table 1-57. Communications Control Panel

Key	Nomenclature	Function	Remarks
1	AUDIO headset jacks	Provides connections for dual prong headset plug to CCS for listen only or talk-listen capability.	
2	CCS VOLUME control	Provides rotary control of selected channel volume.	
3	AUDIO SELECT sw	Provides for selection between communication loops available through CCS keyboard and backup loop.	
4	BACKUP VOLUME control	Provides rotary control of backup loop audio volume.	
5	AUDIO SELECT sw	Provides selection between communication loops available through CCS keyboard and monitor loop.	
6	MONITOR SELECT sw	Enables operator to select any of individual monitor loops (astro) or all simultaneously.	

1.3.6.12 Malfunction Insertion Unit.

The malfunction insertion unit (MIU) provides control over, and monitoring of, simulated spacecraft malfunctions. The MIU consists of control and display panels, located on the IOS and T/M console, and the associated electronic logic circuitry. The unit provides the instructor with the capability to perform the following functions:

- Enter or clear simulated malfunctions in the computer program.
- Display the status of any selected simulated malfunction.
- Erase any selected simulated malfunction or clear all active malfunctions from the program.

Three MIU control panels are located on the IOS, one at each instructor station. These panels permit the instructor to initiate instructions regarding simulated malfunctions to the computer via the logic circuitry. Simulated malfunctions are coded alphanumerically. The system designation comprises the lettered portion of the code with eleven systems to be identified. The numerical portion of the code identifies each malfunction within the system simulation. Figure 1-67 illustrates the MIU control panel. The functions of the controls are described in table 1-58.

An MIU display panel is provided in conjunction with, and immediately adjacent to, the MIU control panels. These panels display information pertaining to simulated malfunction selection and status. Three panels are provided: one on the T/M console, and the other two on the right- and left-hand pie sections of the IOS. From these panels, the instructor can determine the status of any simulated malfunction in the computer program or any that has been manually entered. Panel arrangement is shown in figure 1-68, and the functions of the indicators are provided in table 1-59.

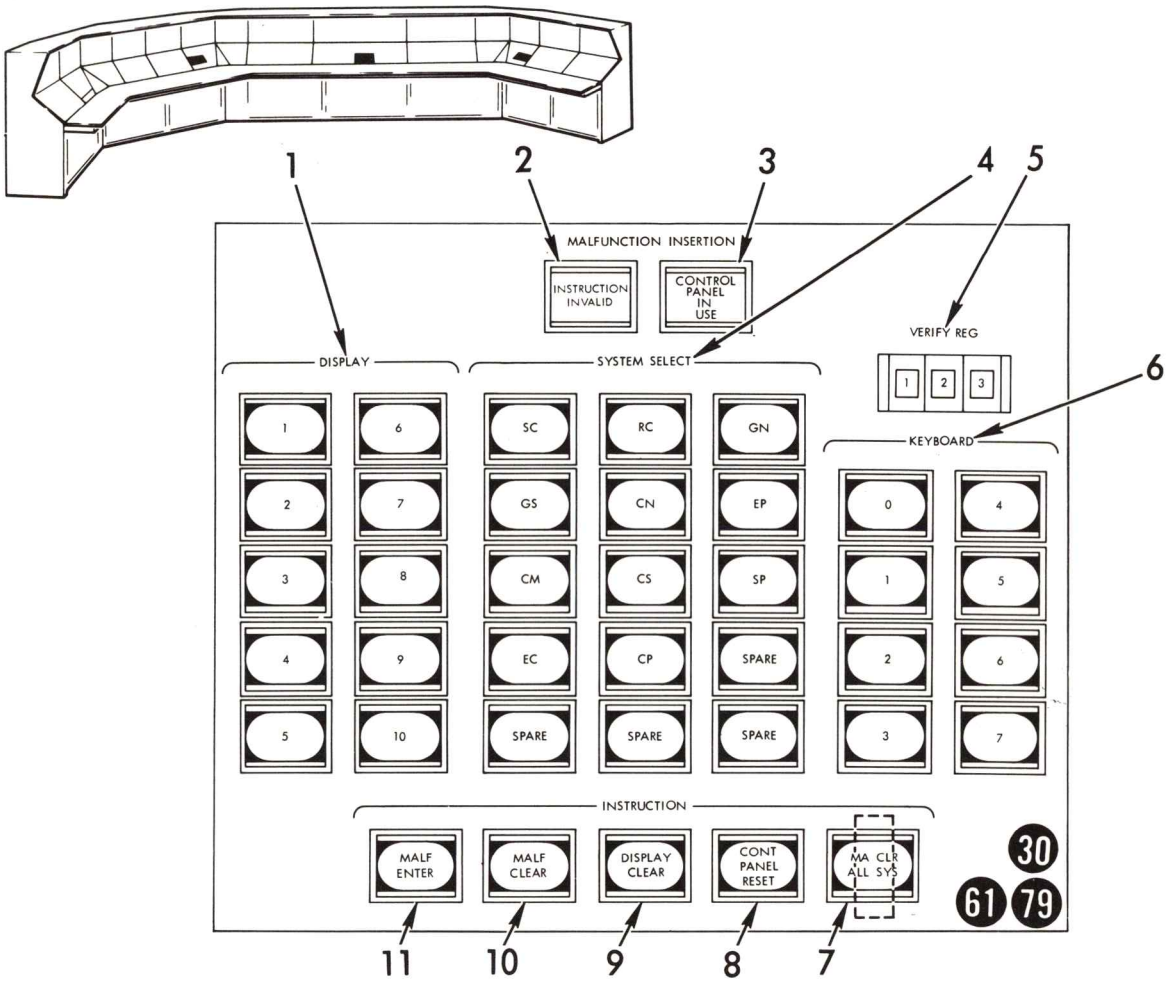

Figure 1-67. MIU Control Panel

Table 1-58. MIU Control Panel

Key	Nomenclature	Function	Remarks
1	DISPLAY sw-lt	Selects location in which malfunction code and status is to be displayed on MIU display panels.	
2	INSTRUCTION INVALID lt	Indicates an invalid malfunction code has been selected.	
3	CONTROL PANEL IN USE lt	Illuminates whenever any one of three control panels is operated.	
4	SYSTEM SELECT sw-lt	Selects and indicates system into which malfunction is to be inserted.	
	CM	Communications	
	CN	Cryogenic storage	
	CP	SIVB control and propulsion	
	CS	Crew safety	
	EC	Environmental control	
	EP	Electrical power	
	GN	Guidance and navigation	
	GS	Sequence control group	
	RC	Reaction control	
	SC	Stabilization and control	
	SP	Service propulsion	
5	VERIFY REG display	Displays octal numeric code keyed upon keyboard.	
6	KEYBOARD sw-lt	Enables selection of octal numeric portion of malfunction code.	
	INSTRUCTION		
7	MASTER CLEAR ALL SYSTEMS sw-lt	Removes all malfunctions from computer program.	
8	CONT PANEL RESET sw-lt	Resets all sw and lt on control panels.	
9	DISPLAY CLEAR sw-lt	Clears all lt on MIU display panel and drives alphanumeric display to blank display.	
10	MALF CLEAR sw-lt	Removes displayed malfunction corresponding to DISPLAY sw selected from computer program.	
11	MALF ENTER sw-lt	Enters displayed malfunction corresponding to DISPLAY sw selected into computer program.	

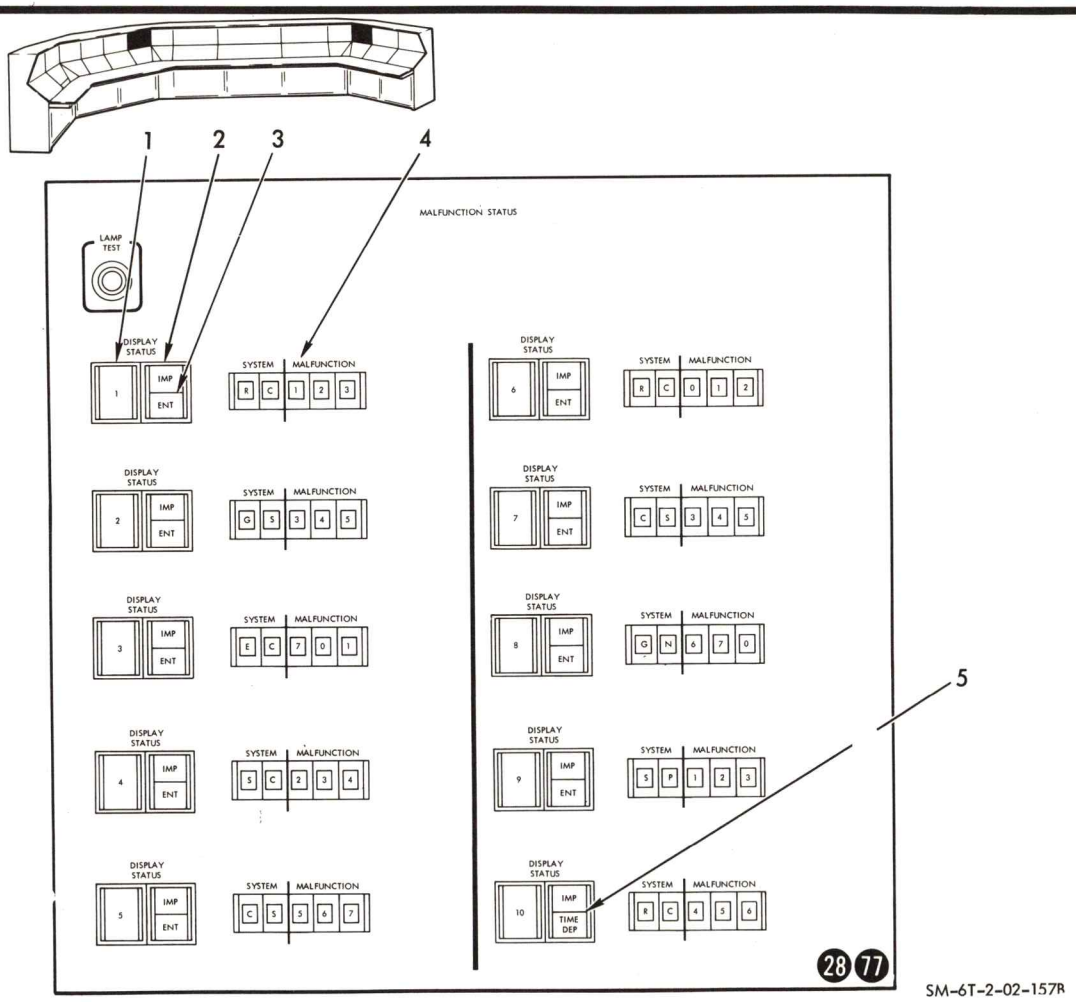

Figure 1-68. MIU Display Panel

Table 1-59. MIU Display Panels

Key	Nomenclature	Function	Remarks
	DISPLAY STATUS lt		
1	Display lt	Numeric readout of selected display.	
2	IMP lt	Indicates that malfunction code selected is valid and further instructor action is required.	
3	ENT lt	Illuminates whenever a manually selected malfunction is activated. Illuminates to indicate that selected malfunction was previously entered into program.	
4	MALFUNCTION display	Magnaline display which provides an alphanumeric readout of selected malfunction code.	
5	TIME DEP lt	For manual or preprogrammed malfunctions, this lt functions as 3 above. For time dependent malfunctions, this lt will flash off and on for 90 seconds prior to activation of malfunction.	

1.3.6.13 Time Displays.

There are two time display panels located on the IOS, as shown in figure 1-69. Each display contains two digital readouts, the functions of which are described in table 1-60. These displays are not repeaters of on-board timers. They are provided to aid the instructor in timing various crew activities and simulated events.

In addition to the timers mentioned above, there is a remote time display (figure 1-70) located on top of the central IOS console. This unit displays the actual GMT received from a time code translator which is part of the IMCC/SCATS equipment.

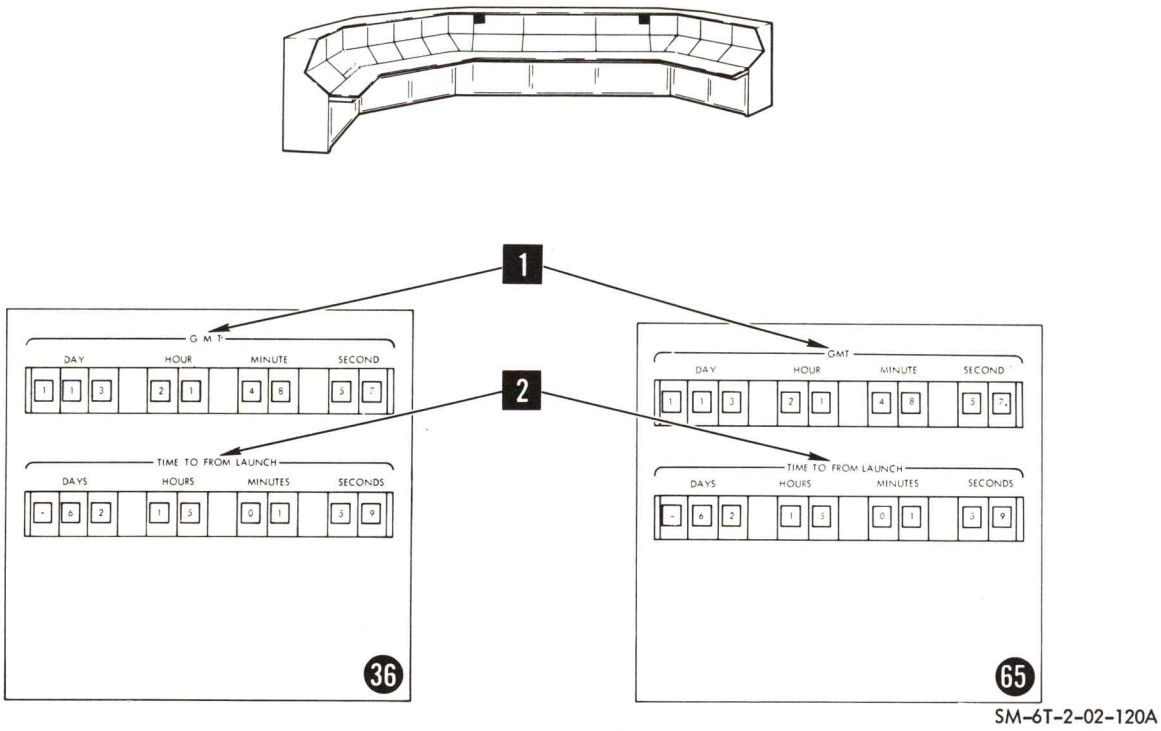

Figure 1-69. Central Timing Equipment

Table 1-60. Central Timing Equipment Panel

Key	Nomenclature	Function	Remarks
1	GMT display (IOS only)	Digital readout of second, minute, hour, and day of year referenced to simulated GMT.	
2	TIME TO/FROM LAUNCH display (IOS only)	Digital readout of second, minute, hour, and day referenced to launch time.	

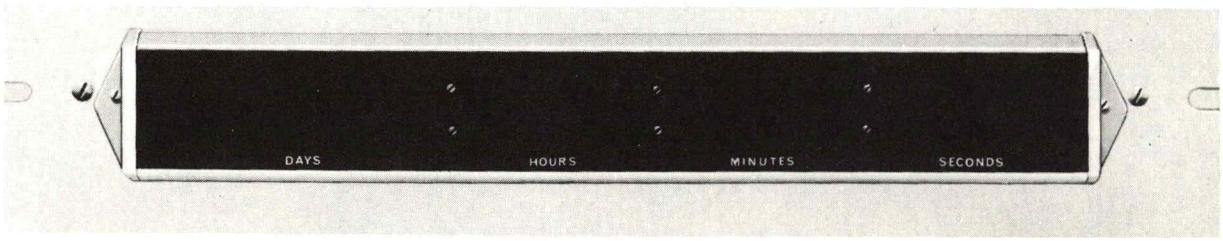

Figure 1-70. Remote Display Indicator

1.3.6.14 Closed Circuit Television System.

The closed circuit television (CCTV) is a black and white TV system consisting of three GPL model 800 cameras, three monitors, and the interconnection between cameras and monitors. The cameras are fixed in the SCM with no zoom capabilities. Each TV camera uses a vidicon tube which provides a clear picture of items located 3 to 8 feet from the lens and has 77 degrees of angular view across the corners of the vidicon tube. The location of the cameras is illustrated in figures 1-2 and 1-3. Camera 2 is located behind the left shoulder of the crew member in the commander's station. Camera 1 is located near the left foot of this station. Camera 3 is located behind the right shoulder of the crew member in the right couch. Cameras 2 and 3 cover the main display panel, overlapping in the center, and also provide a front view of the G&N lower equipment bay. Camera 1 provides a view of the three crew members in the interior of the SCM.

The three monitors are mounted above the respective flight crew stations at the IOS. (See figure 1-10.) Each monitor has controls which are not part of the IOS. Their function is similar to those of any commercial set. The camera controls are located beneath each monitor atop the IOS. These controls are illustrated in figure 1-71 and functionally described in table 1-61.

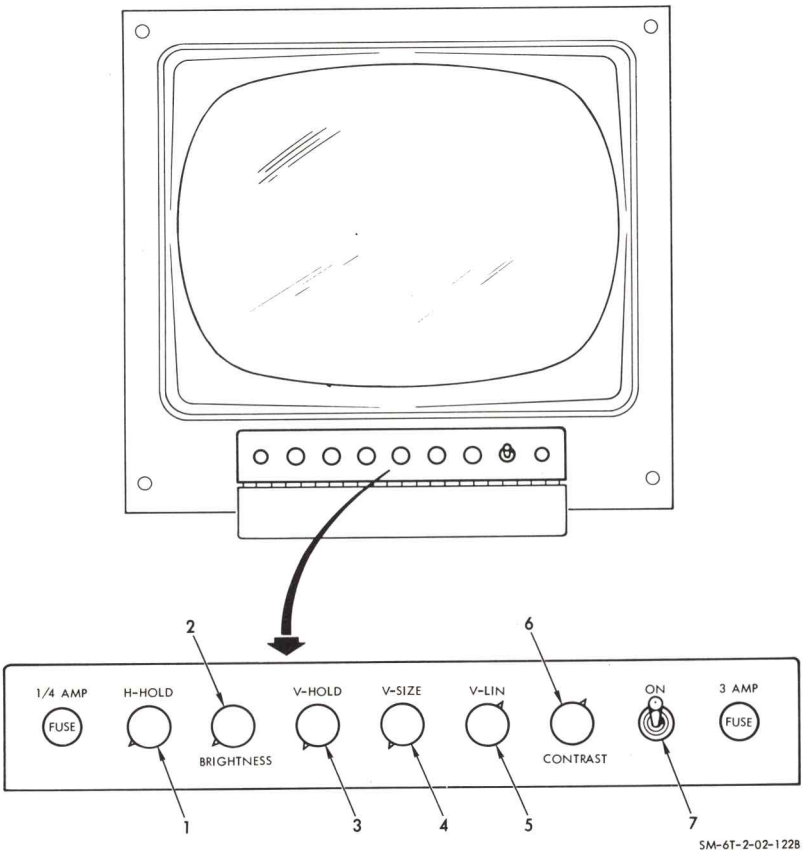

Figure 1-71. CCTV Monitor Control Panel

Table 1-61. CCTV Monitor Control Panel

Key	Nomenclature	Function	Remarks
1	H HOLD control	Provides horizontal stability control.	
2	BRIGHTNESS control	Controls brightness of picture.	
3	V HOLD control	Provides vertical stability control.	
4	V SIZE control	Controls vertical size of picture.	
5	V LIN control	Provides control of vertical linearity of picture.	
6	CONTRAST control	Provides black-to-white contrast control of picture.	
7	ON sw	Controls power to monitor.	

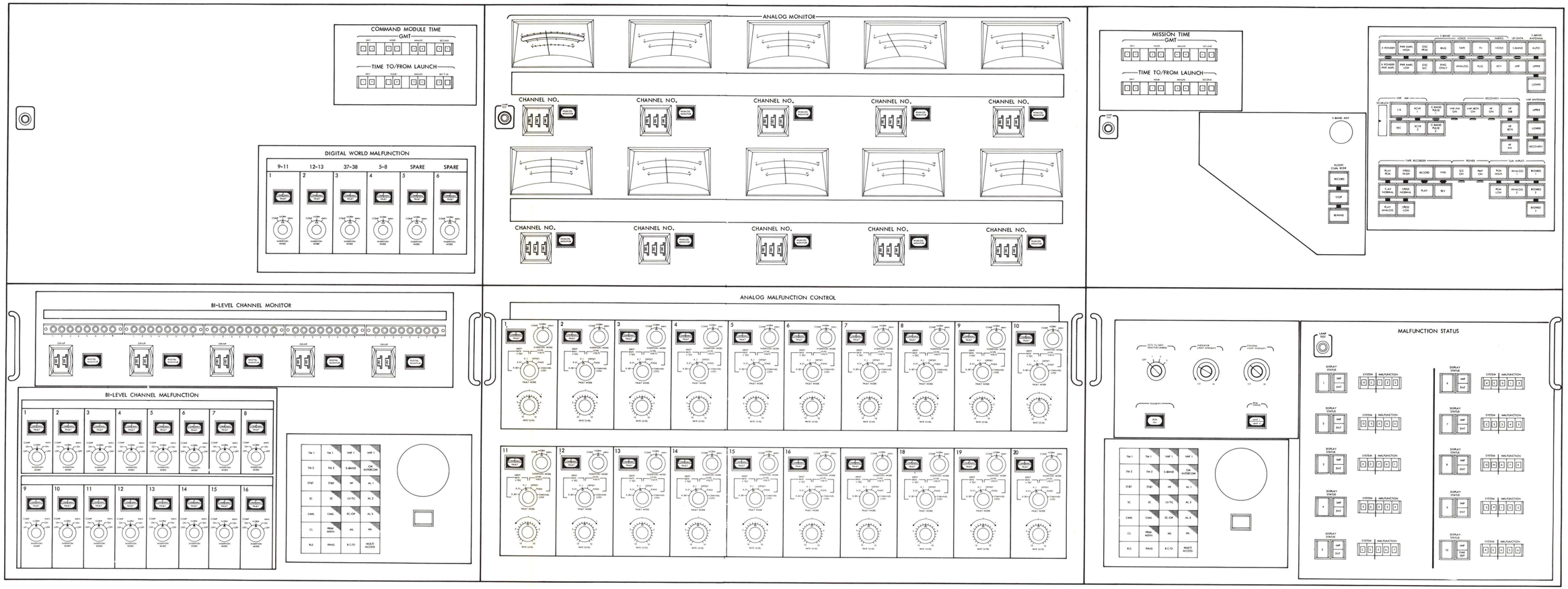

SM-6T-2-02-159B

Figure 1-72. Telemetry Console

1.4 TELEMETRY CONSOLE.

The telemetry console depicted in figure 1-72 contains data word displays for analog, bilevel, and GMT digital words. Other parallel digital words are displayed bit by bit on the bilevel display. The console contains displays of the actual PCM encoder status; two time displays; and repeater light displays of the SCM controls and displays and the MIU, which are driven in parallel with identical displays on the IOS. In addition, the T/M console includes provisions to fault individual data words (analog, bilevel, or digital words within the format). A functional description of the control panels on the T/M console is included in the following paragraphs.

1.4.1 MONITOR CONTROL.

The controls and displays on these panels allow the instructor-operator to monitor any of the computer or periphery equipment data inputs to the PCM encoder unit on each of the meters. However, only 10 analog channels can be monitored at any one time. They also allow monitoring of a selected faulted channel. The panels are illustrated in figures 1-73 and 1-74, and the controls are functionally described in tables 1-62 and 1-63.

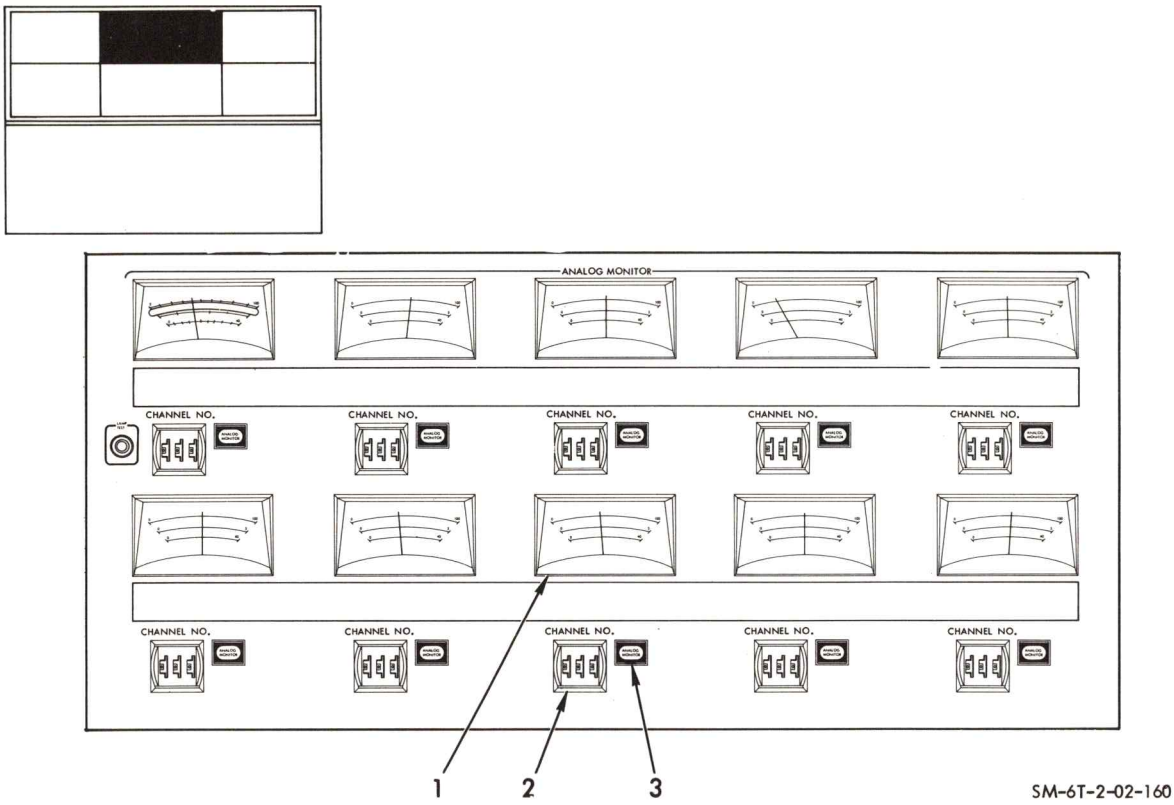

Figure 1-73. Analog Monitor Control Panel

Table 1-62. Analog Monitor Control Panel

Key	Nomenclature	Function	Remarks
1	MONITOR meter	Provides metered analog indications of selected channel.	Ten panel-mounted voltmeters scale reading 0 to 100% 0 to 5 volts 0 to 40 mv.
2	CHANNEL NO. digital sw	Selects one of 320 analog lines to be monitored by meter. Each sw selects one line of a group of 10 lines. These are the hundreds, tens, and ones.	Ten 3-digit channel number thumbwheels. Full capability is 384 analog channels.
3	ANALOG MONITOR actuator sw-lt	Allows metering of channel selected by digital sw.	Analog monitor P/B.

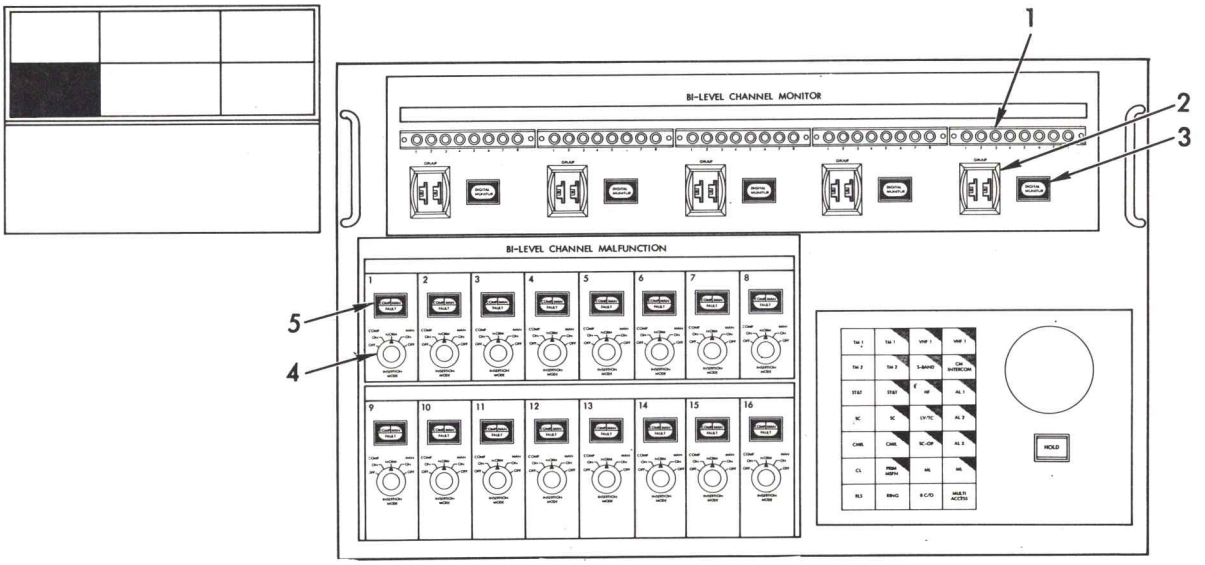

Figure 1-74. Digital Monitor Control Panel

Table 1-63. Digital Monitor Control Panel

Key	Nomenclature	Function	Remarks
1	DIGITAL READOUT display (5 groups)	Displays selected 8-bit digital group readout.	Binary 1 is represented by lighted lamp.
2	GROUP digiswitches (5)	These two digital sw for each of five groups select one of 39 input groups to be displayed on 8-bit readout.	
3	DIGITAL MONITOR actuator sw-lt	Activates group of eight lines selected by digital sw of related readout.	
4	INSERTION MODE sw		
	ON/OFF	Enables fault of entire word to all 1s (ON) or all 0s (OFF).	
	NORM	Provides continuity for data line and prevents fault insertion.	
	MAN	Provides insertion of fault under manual control.	
	COMP	Provides automatic fault insertion.	
5	COMP/MAN/FAULT sw-lt	Indicates that fault insertion is under COMP or MAN control. Indicates fault has been inserted.	

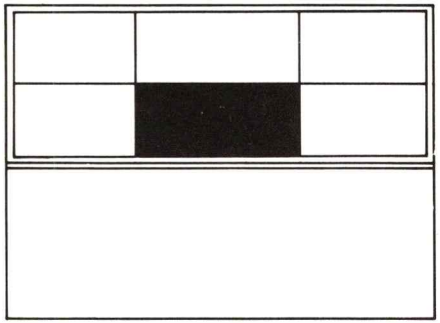

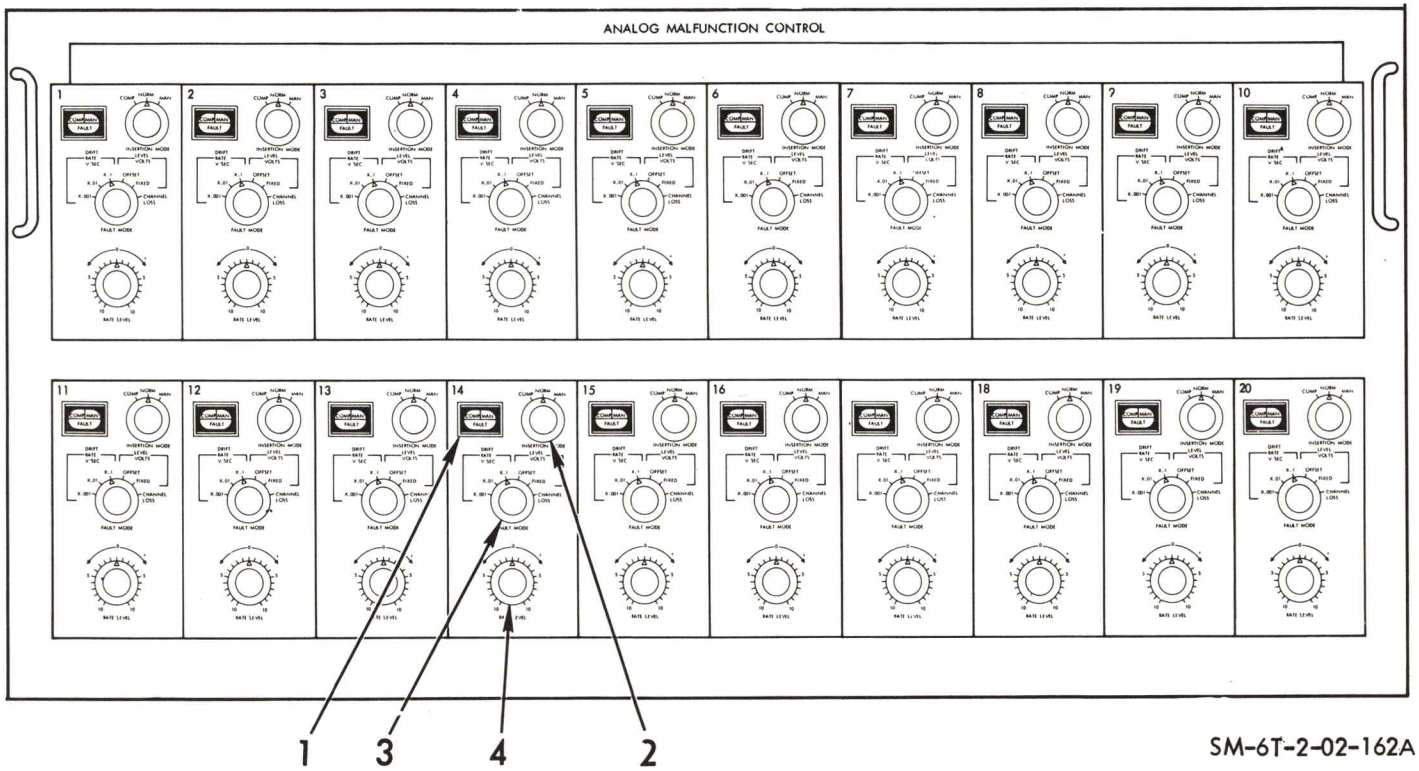

Figure 1-75. Analog Malfunction Control Panel

1.4.2 FAULT CONTROLS.

Fault controls are provided for the introduction of faults into the data lines between the AMS computer and the PCM units. Each fault control panel includes monitor lights and selection controls. A functional description of those controls located on the fault panels is listed in table 1-64.

Twenty analog fault controls (figure 1-75) are provided on the panel. Each is capable of introducing the following:

- Drift at a controlled rate
- Offset of a present amount
- Fixed level substitution to a present level
- Channel loss

Sixteen bilevel fault controls are provided on the digital fault control panel (figure 1-76). These controls, functionally described in table 1-65, are used to introduce bit failure into the parallel word signal lines. In addition, six digital word fault controls are provided to simultaneously fail all bits of the word. (See figure 1-76.)

Table 1-64. Analog Malfunction Control Panel

Key	Nomenclature	Function	Remarks
1	COMP/MAN/FAULT sw-lt	Provides an indication of the following: a. Whether computer or operator is controlling fault insertion b. Fault insertion. Provides switching action to insert fault manually.	
2	INSERTION MODE sw		
	NORM	Provides series continuity for data line and prevents fault insertion.	
	COMP	Provides computer insertion of faults.	
	MAN	Provides manual insertion of faults.	
3	FAULT MODE sw		
	DRIFT RATE	Allows for a preset variable offset of d-c reference of data signal.	
	LEVEL VOLT		
	OFFSET	Provides for a preset fixed offset of d-c reference of data signal.	
	FIXED	Provides for a preset fixed level to replace data signal.	
	CHANNEL LOSS	Provides for opening data line.	
4	RATE/LEVEL sw 0 - ±10	Provides variation of rate or level selected by FAULT MODE sw.	

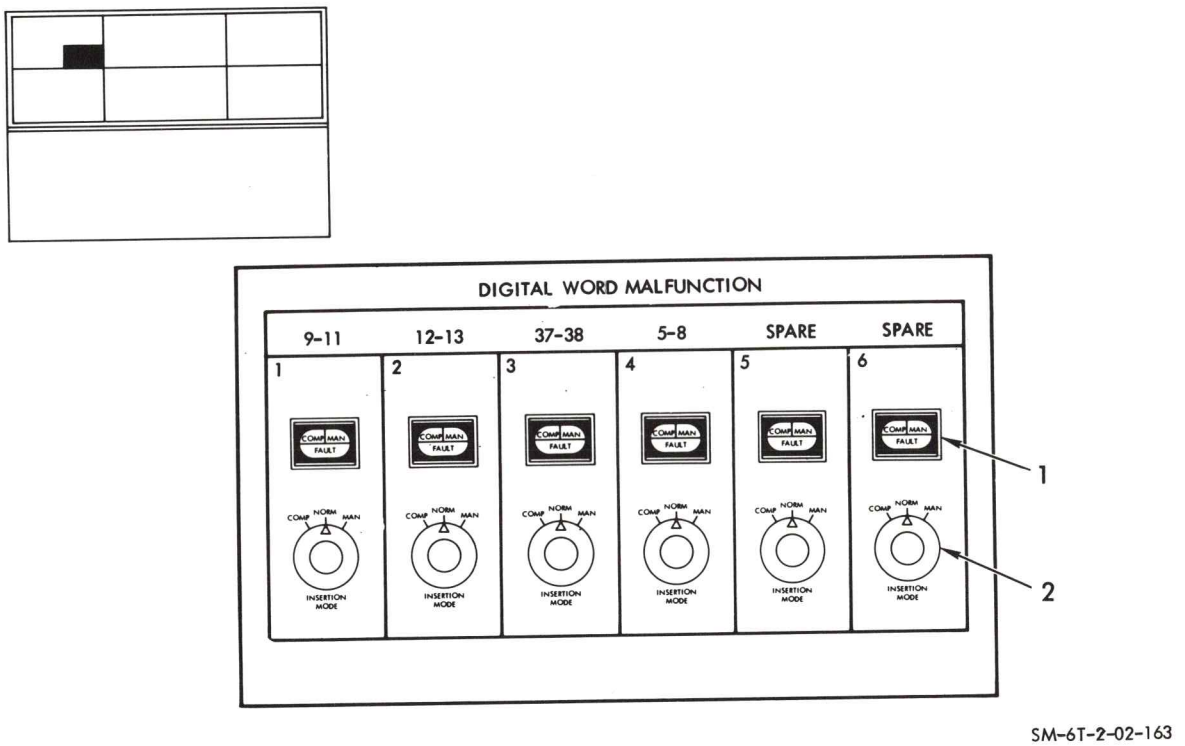

Figure 1-76. Digital Word Malfunction Control Panel

Table 1-65. Digital Word Malfunction Control Panel

Key	Nomenclature	Function	Remarks
1	COMP/MAN/FAULT sw-lt	Indicates whether fault insertion is under computer or manual control. Indicates fault has been inserted. Provides switching action for manual insertion of faults.	
2	INSERTION MODE sw	Allows selection of either computer or manual fault insertion control.	
	COMP	Enables computer control of fault insertion.	
	NORM	Allows normal operation of PCM.	
	MAN	Enables manual control of fault insertion.	

1.4.3 TIME DISPLAY.

Two time displays are provided on the telemetry console. The time displays are repeater displays of the previously described time displays located on the IOS. These displays are illustrated in figure 1-77 and functionally described in table 1-66.

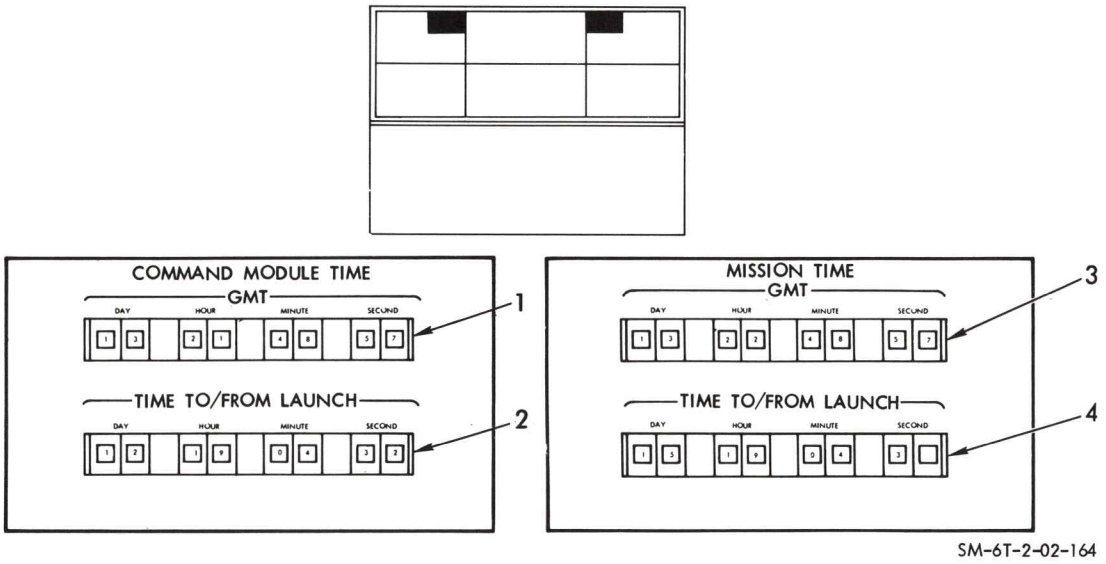

Figure 1-77. Time Display Panels

Table 1-66. Time Display Panels

Key	Nomenclature	Function	Remarks
	COMMAND MODULE TIME display	Repeat of time from SCM and does include any fault effects introduced through faulting media.	
1	GMT timer display	Digital display of GMT signal encoded in PCM data and including word or bit failure introduced at T/M console.	
2	TIME TO/FROM LAUNCH timer display	Digital display of time to or from launch.	
	MISSION TIME display	These timers show simulated mission time (GMT and TIME TO/FROM LAUNCH) and will not include fault to on-board clocks.	
3	GMT timer display	Digital display of GMT signal encoded in PCM data.	
4	TIME TO/FROM LAUNCH timer display	Digital display of time to or from launch.	

1.4.4 COMMUNICATIONS CONTROL.

The two panels depicted in figure 1-78 are duplicates of IOS panels and are repeaters of those on the SCM main display panels. Table 1-67 provides a description of these panels. They provide the telemetry console operator with an indication of the operational configuration employed for C&D by the flight crew (including antenna position). The console communications panels located on the T/M console are depicted and explained in this section as trainer supplementary displays and controls, paragraph 1.3.6.11, figure 1-65.

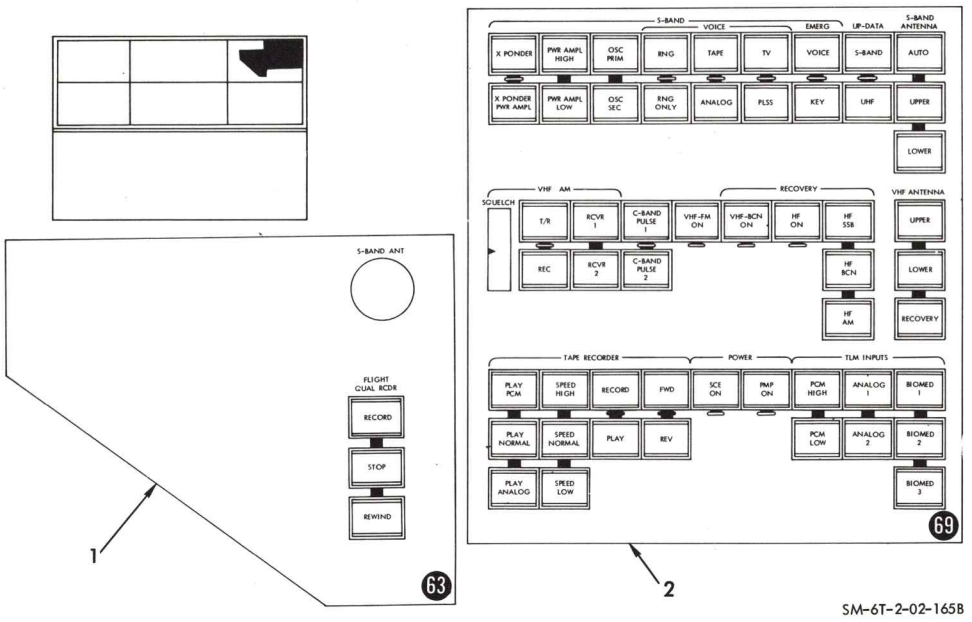

Figure 1-78. Communications Control Panels

Table 1-67. Communications Control Panels

Key	Nomenclature	Function	Remarks
1	Antenna control panel	Repeater of IOS antenna control panel	
2	Communications panel	Repeater of IOS communications subpanel.	

1.4.5 TELEMETRY STATUS.

This panel provides an indication as to the condition of the PCM units. In addition, lighting controls for the console are located here as well as control of television picture transmission to IMCC. Figure 1-79 illustrates this panel, as well as another panel which is a repeater of an IOS panel and need not be discussed again (figure 1-72). Table 1-68 provides a functional description of the controls and displays located on this panel.

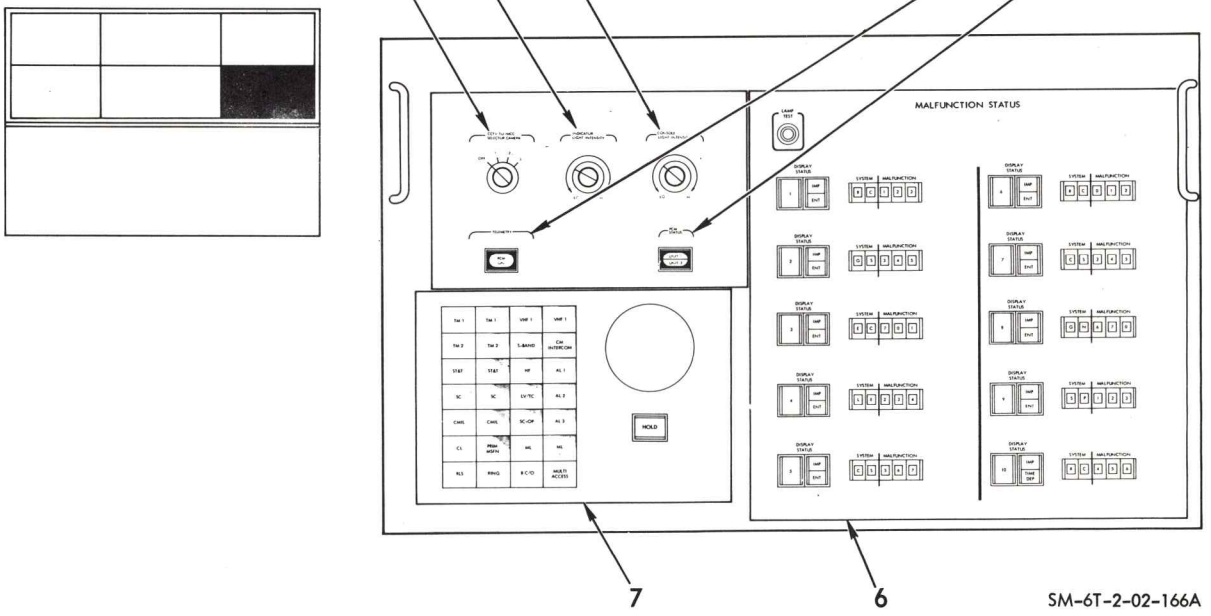

Figure 1-79. Telemetry Status Panel

Table 1-68. Telemetry Status Panel

Key	Nomenclature	Function	Remarks
1	CCTV to IMCC CAMERA SELECTOR sw	Position of this sw determines which TV camera picture is presented to IMCC.	
2	INDICATOR LIGHT INTENSITY control	Allows variation of T/M indicator lighting intensity.	
3	CONSOLE LIGHT INTENSITY control	Allows variation of T/M console overhead lighting intensity.	
4	TELEMETRY sw-lt	Enables activation of PCM unit.	
5	PCM STATUS sw-lt	Provides GO NO-GO status indication of actual PCM encoder and enables resetting of malfunctioned unit.	
6	MIU DISPLAY panel	Panel is a repeater panel of IOS MIU and is under IOS operator control.	
7	CONSOLE COMMUNICATIONS panel	Function of this panel is described under Console Communications System (CCS).	

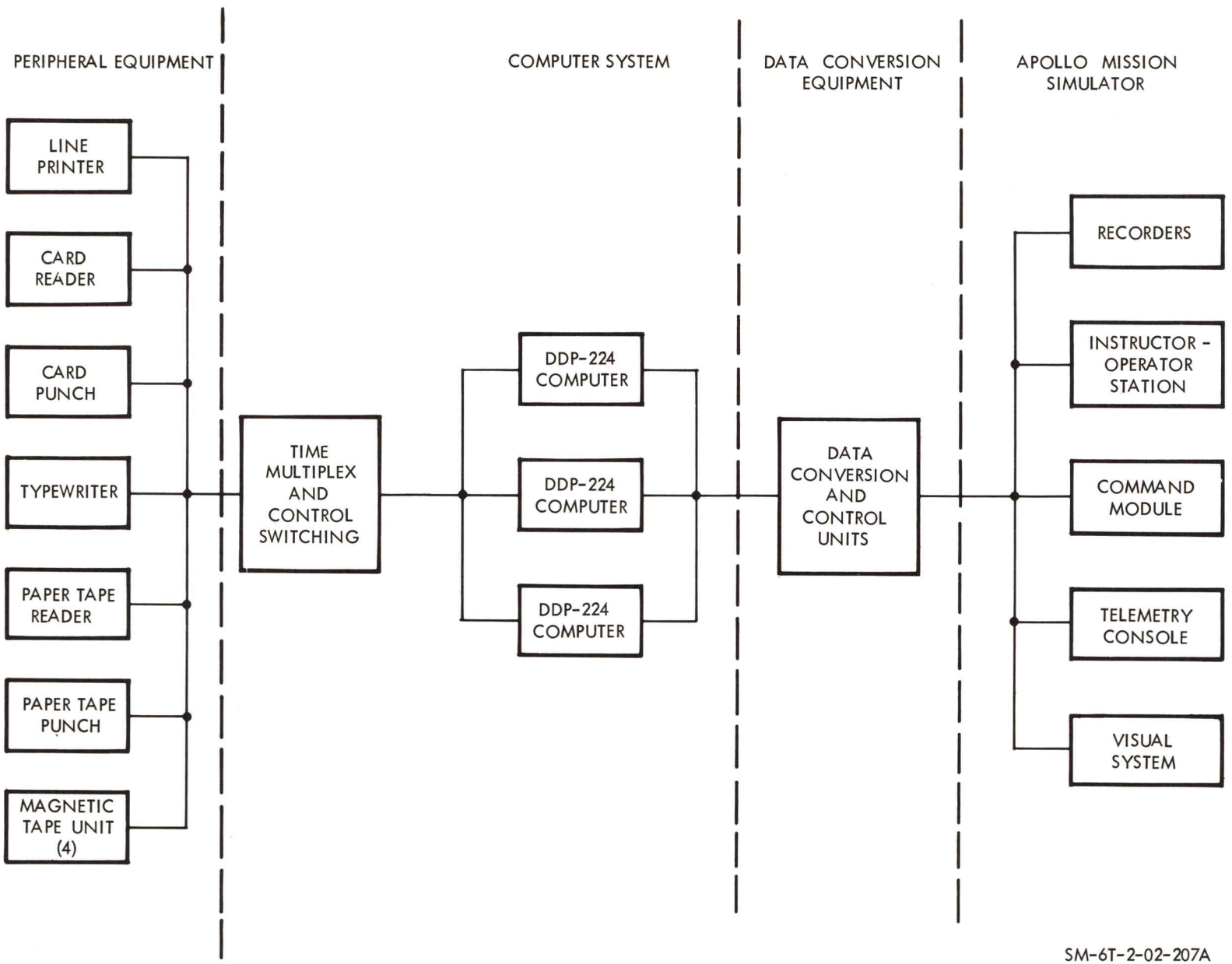

Figure 1-80. AMS Computer Complex

1.5 COMPUTER COMPLEX.

The AMS computer complex is comprised of three groups of equipment. These are the computer systems, the peripheral equipment, and the data conversion equipment. The computer systems provide the computations necessary for spacecraft simulation; the peripheral equipment provides communications with, and records the outputs of, the computer systems; and the data conversion equipment links the computer systems with the simulated command module, the visual systems, the instructor-operator station, and other parts of the AMS. The block diagram in figure 1-80 illustrates the equipment involved and the interface between units.

1.5.1 COMPUTER SYSTEM.

The function of the AMS computer system is to perform the computations involved in simulating a spacecraft mission. These computations are based on spacecraft systems and simulator drive equations, which are mechanized through math models and solved by the digital computers. In addition to providing the computations, the computer system reacts to inputs from the SCM, the IOS, and from the MSCC and transmits data back to these units reflecting realistic vehicle and systems simulation. The speed and programing of the computers are such as to provide the effects of real-time simulation.

The computer system consists of three models of the DDP-224 digital computer. The block diagram of figure 1-80 illustrates the interface between the computers (designated systems C, D, and E) and the integrated equipment. In addition to having expanded memory blocks, systems D and E have access to a common memory. System C also has access to the common memory through an intercomputer communications unit. Simultaneous communications between each computer and the peripheral equipment is accomplished through direct memory access units and time multiplex units. The transfer of data is provided at two speeds, 375 kc and 735 kc.

The DDP-224 (figure 1-81) is a general-purpose digital computer capable of performing data processing, including real-time control and scientific computations. Basically, the DDP-224, like any general purpose computer, is composed of four functional units. These units are the memory, the input/output units, the control unit, and the arithmetic unit. The functional arrangement with data flow and control signal distribution is shown in figure 1-82. The block diagram for the DDP-224 is depicted in figure 1-83.

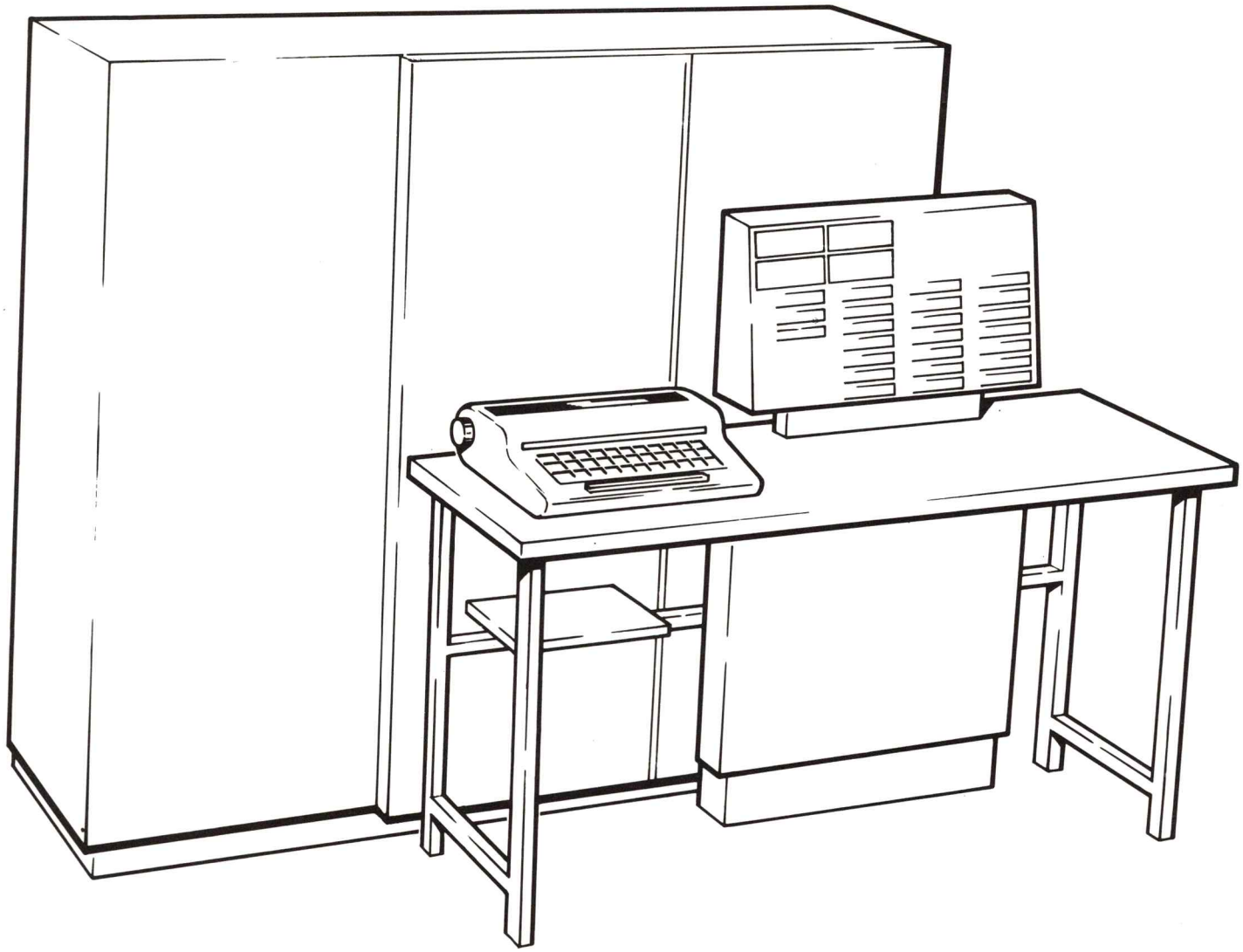

SM-6T-2-02-208

Figure 1-81. DDP-224 Computer

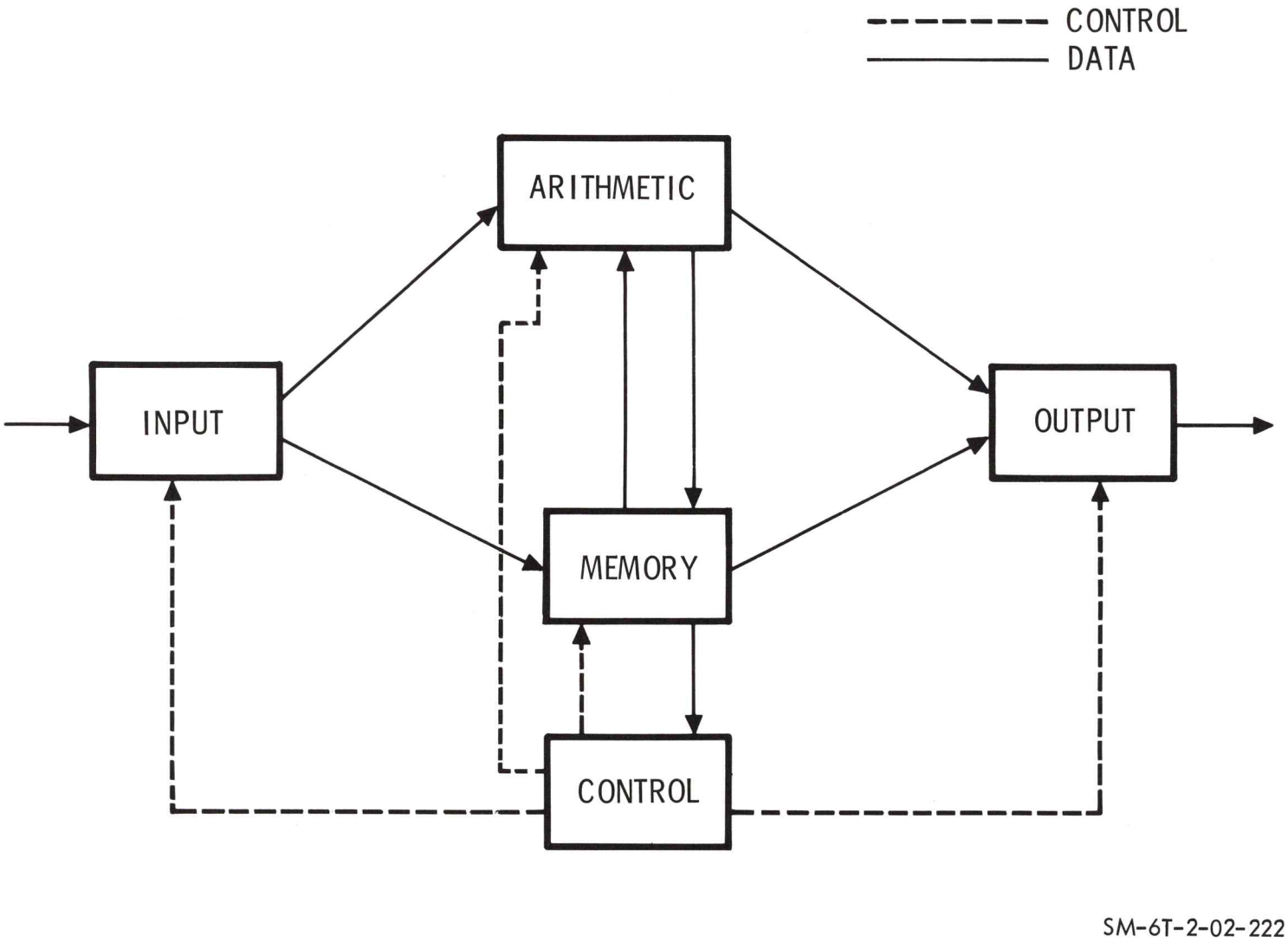

Figure 1-82. Digital Computer Simplified Block Diagram

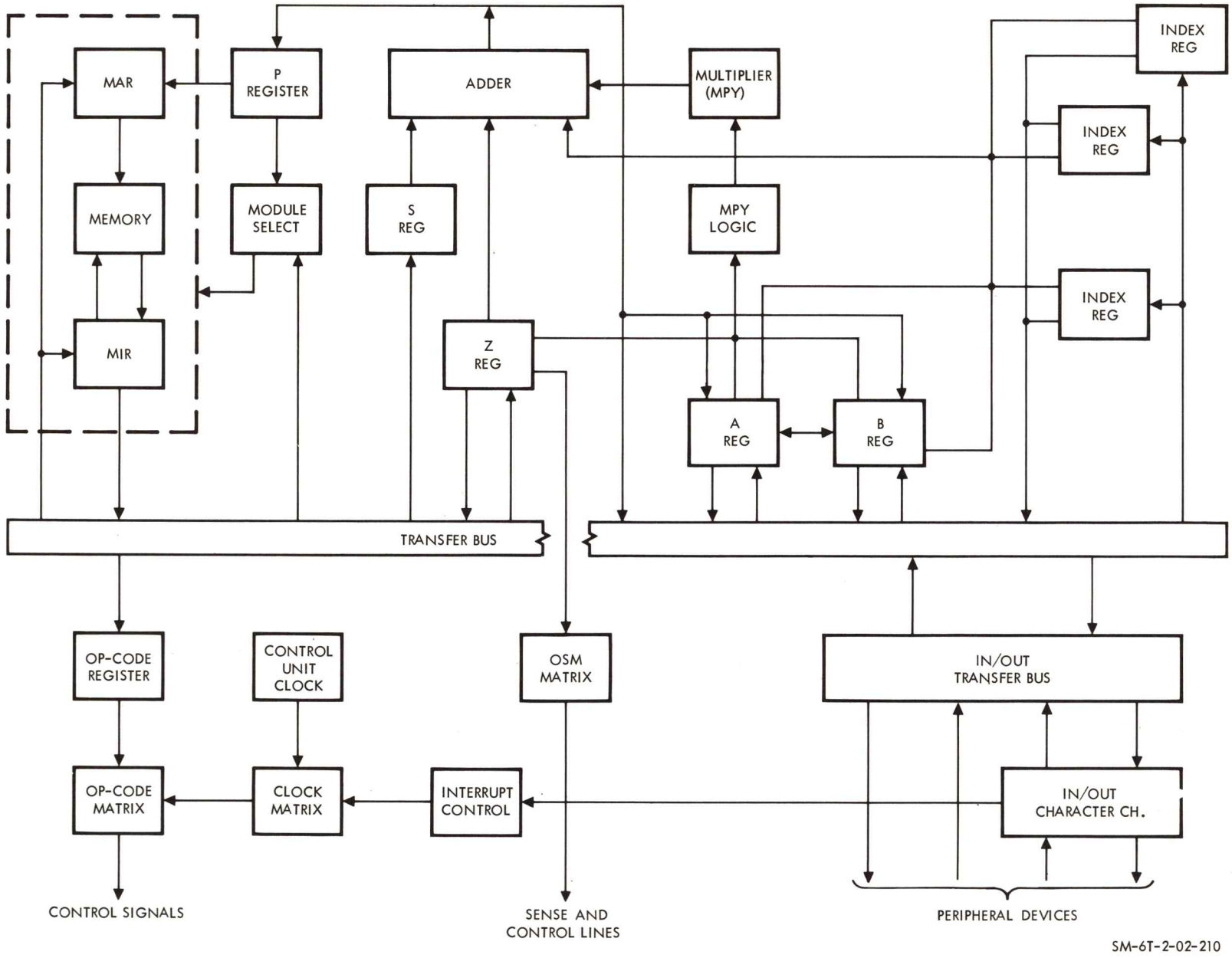

Figure 1-83. DDP-224 Computer Block Diagram

1.5.1.1 Memory Unit.

For a digital computer to perform computations, all data pertinent to the problem and the method of solution (instructions) must be stored in the computer before the solution is attempted. Similarly, as with spacecraft simulation, all the information relative to the spacecraft and the sequence of events must be stored in the computer before starting a training mission. This information is in the form of two types of digital words, data words and instruction words. A series of instructions make up a computer program. Groups of instructions within a program that perform a task are called routines or subroutines.

A magnetic core unit capable of storing 4096 words is the basic memory of the DDP-224. In the AMS, the memories of two computers, systems D and E, have been expanded to provide a 32,768-word storage capacity while the third computer, system C, has been expanded to a 57,344-word capacity. In addition, an 8192-word common memory is shared between systems D and E. All computers have been adapted to enable addressing memory locations beyond the normal 32 K range.

A memory address register (MAR) and a memory information register (MIR) are considered part of each memory. The MAR locates the word that is to be put into memory or taken out; the MIR furnishes temporary storage while the words are being transferred into memory or out.

1.5.1.2 Input/Output Unit.

As described in the previous paragraph, the computer program and data must be transferred to memory before an execution of a program. A function of the input unit is to provide the means of inserting information into memory from peripheral devices, such as the typewriters, magnetic tape units, card readers, etc. The output unit is used to connect devices, such as line printers, card punches, magnetic tape units, or typewriters to the computer when recording data on cards, tapes, or print-outs. Intercomputer transfer and transfer between the computers and the data conversion equipment is also accomplished by the input/output unit.

Included as part of the input/output unit of each computer are parallel input/output channels, input/output character buffer and bus, sense lines and interrupt control, and command signal generation. Each computer is equipped with a direct memory access (DMA) channel. System C contains its own fully buffered channel (FBC), whereas systems D and E share a common FBC.

Parallel Input/Output Channels.

The parallel input/output channels are gating devices used in conjunction with the FBCs and DMAs to transfer data between the memory and the peripheral equipment and data conversion equipment.

Input/Output Character Channel.

The input/output character channel is a gating device used to connect the computers with the typewriter, paper tape reader, and paper tape punch.

Sense Lines and Interrupt Control.

The interrupt control and sense lines are used to detect conditions within, or external to, the computers which require alterations to the computer programs.

Command Signal Generation.

The input/output unit also generates command signals (OCP commands) which are used to control external equipment, such as typewriter and paper tape punch, as well as for use by internal sources.

Fully Buffered Channel.

A fully buffered channel (FBC) is a unit that, when once set up from an external source, can transfer data directly to or from memory, independent of the main frame of the computer. In order to accomplish this, the FBC contains a data register which is used for buffering of data, an address register which controls the addressing of the memory, and a range register that controls the transfer of data. In the AMS, the FBCs are used to transfer data between the data conversion equipment and the computers and to provide intercomputer data transfer.

Direct Memory Access Channel.

The direct memory access (DMA) channel is similar to the FBC in design and operation. The DMAs are used in the AMS to transfer data between magnetic tape units, line printer, card reader, card punch, and the computers.

As illustrated in figure 1-83, the access distribution unit and the time multiplex units are used in conjunction with the input/output units for data transfer.

Access Distribution Unit.

The access distribution unit (ADU) enables computers D and E to function as an integrated multiprocessing system. The ADU permits systems D and E to work into or out of the common memory, and also provides system C with access to the common memory.

Time Multiplex Units.

The time multiplex units (TMU) permit the computers to communicate with the peripheral device simultaneously. In the AMS any of the three computers can gain access to and communicate with the magnetic tape units, line printer, card reader, and card punch. Selection of the peripheral unit is obtained by the generation of a command by the computer under program control.

1.5.1.3 Control Unit.

As explained previously, a computer program consists of a series of instruction words which are stored in memory. A function of the control unit is to fetch each instruction word in sequence from memory, translate the word, and issue commands to other parts of the computer that will execute the task defined by the instruction word. The execution of the instruction word depends on timing pulses which are generated in the control unit. The control unit is also capable of modifying an instruction before it is executed.

In the AMS computer system, the control unit of each computer contains an operation-code register (OP-code), and operation-code matrix (OCM), program register (P register), index registers, shift registers (S registers), control unit clock, and clock matrix. The function of the operation-code register is to store that portion of the instruction word that defines the task to be performed. Index bits and indirect addressing bits are also stored in the register. The operation-code matrix is the gating network that decodes the contents of the operation-code register and produces control signals to execute the task to be performed.

The program register stores the memory location of the next instruction to be performed. Each time a new instruction word is taken from memory, the register is incremented by one. The index registers are used when it is desired to modify an address of the instruction word. The shift registers are used when the position of a word is shifted within the A register or between the A and B registers. The control unit clock is the generator of the timing pulses necessary to execute the instruction. The clock matrix gates the timing pulses from the control clock with the output of the operation-code matrix to provide the proper timing sequence to execute an instruction.

1.5.1.4 Arithmetic Unit.

The function of the arithmetic unit is to perform the computations when commanded by the instruction word. Registers and adders are the devices used to perform the arithmetic functions. Registers are temporary storage devices used to hold data received from memory while it is being processed, and to hold the results of the computation before it is transferred to other parts of the computer. The registers also work in conjunction with the adder to perform the arithmetic functions. The adder is the actual counting device. The arithmetic unit of each computer contains a high-speed adder and three registers: A, B, and Z. The A register is the main register; the B is the auxiliary register. The Z register acts as the link between the memory and the other parts of the arithmetic unit by receiving each word from memory before it is processed.

1.5.1.5 Word Format.

As mentioned in previous paragraphs, two types of digital words are used in the computer program, the instruction word and the data word. Both are binary words containing 24 bits. Figure 1-84 illustrates the format of the instruction and data words. The instruction word consists of an operation code, an address, index bits, and the indirect addressing bit. The operation

code is a two-digit binary number which specifies what command is to be executed. The address is a binary number which specifies the memory address of the data that is to be used in the operation. The index bits specify that an index register will be used with the operation. The indirect addressing bit indicates that an indirect address will be used. The data word is represented by a 23-bit binary number plus a sign bit. The sign bit will indicate the polarity of the number, a one (1) indicates a negative, a zero (Ø) indicates a positive number. The remaining 23 bits will indicate the magnitude of the number.

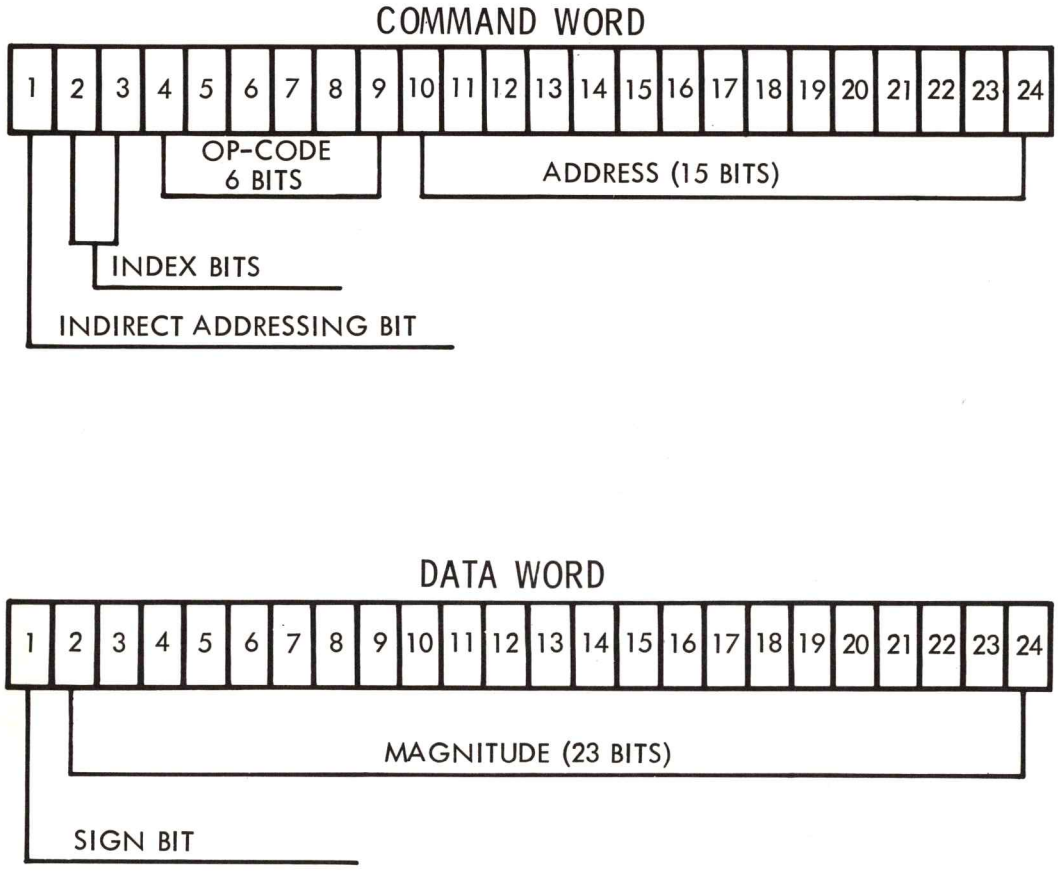

SM-6T-2-02-211

Figure 1-84. Word Format

1.5.1.6 Computer Controls.

Figure 1-85 illustrates the control panel for the DDP-224 computer. A functional description of the controls and displays for each panel are described in table 1-69.

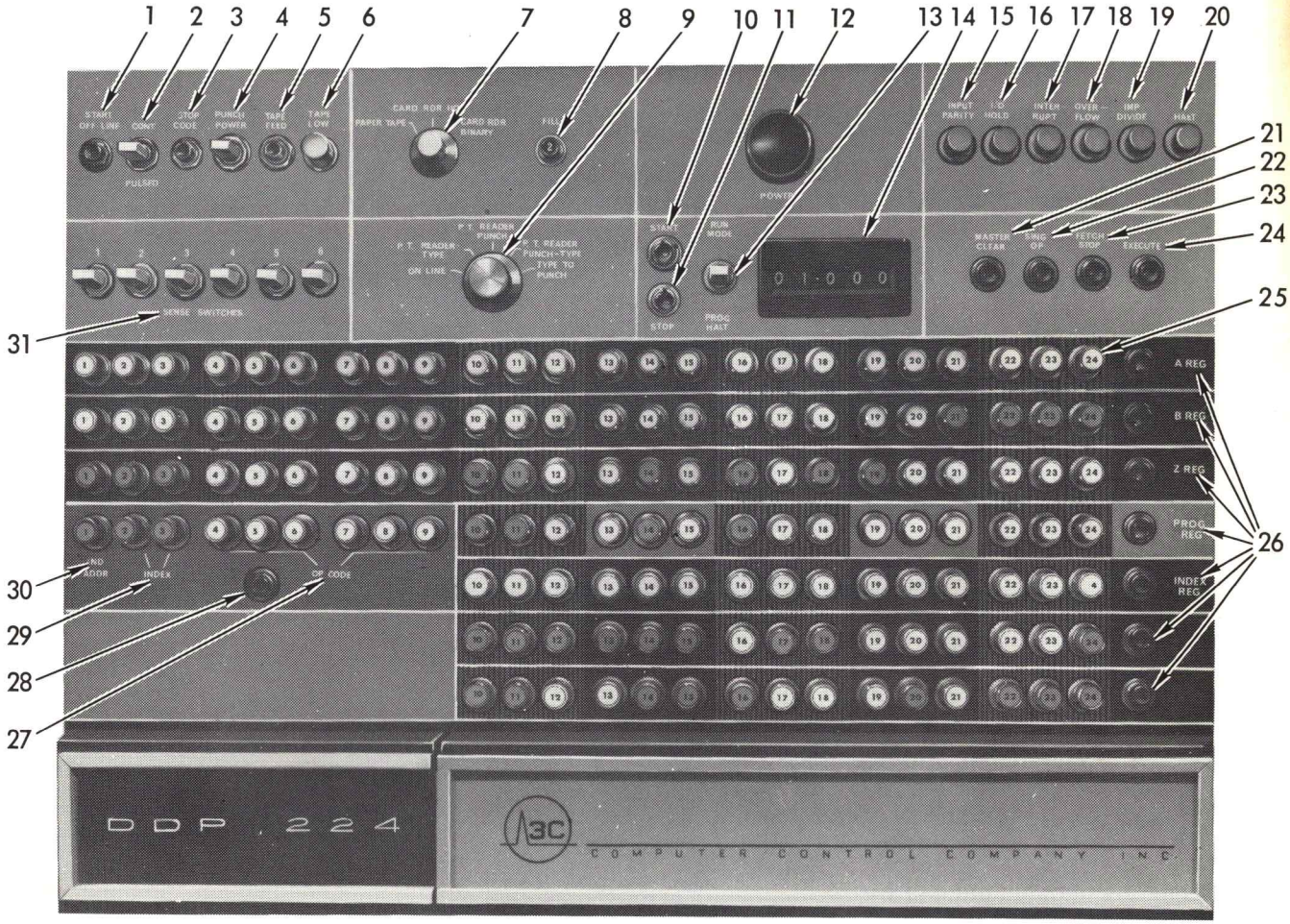

SM-6T-2-02-213A

Figure 1-85. DDP-224 Computer Control Panel

Table 1-69. DDP-224 Computer Control Panel

Key	Nomenclature	Function	Remarks
1	START/OFF-LINE P/B	Starts operation enabled by I/O function select sw.	
2	CONT/PULSED sw	CONT position enables continuous operation of paper tape punch or reader.	
		PULSED position allows pulsed operation of paper tape punch or reader.	
3	STOP CODE P/B	"Stop code" punched on paper tape when depressed.	
4	PUNCH POWER sw	Turns power to paper tape punch motor on or off.	
5	TAPE FEED P/B	Advances paper tape and punches sprocket holes only.	
6	TAPE LOW lt	Indicates low level of paper tape on reel.	
7	(Fill selection rotary sw)	Selects device (card reader or paper tape reader) from which program will be loaded into memory.	
	PAPER TAPE	Selects paper tape reader to load program into memory upon depression of FILL pushbutton.	
	CARD RDR HOL	Enables card reader to load Hollerith data from punched cards into computer memory.	
	CARD RDR BINARY	Enables card reader to load binary data from punched cards into memory.	
8	FILL P/B	Loads computer memory from device selected by FILL selection rotary switch.	
9	(I/O function selection rotary sw)	Provides for on-line connection of peripheral devices or off-line data transfer between devices.	
	ON-LINE	Allows computer to select and control operation of paper tape reader, paper tape punch, and typewriter.	
	P.T. READER TYPE	Information from paper tape is read out on typewriter.	
	P.T. READER PUNCH	Allows duplication of paper tape data by simultaneous reading and punching of tape.	
	P.T. READER PUNCH-TYPE	Permits typewriter to print out information as it is punched on paper tape.	
	TYPE TO PUNCH	Typed information will be punched on paper tape.	
10	START P/B	Causes computer to start operation.	
11	STOP P/B	Causes computer to halt after current instruction is completed.	
12	POWER P/B-lt	Turns power off and on to main computer and auxiliary equipment.	

Table 1-69. DDP-224 Computer Control Panel (Cont)

Key	Nomenclature	Function	Remarks
13	RUN MODE - PROG. HALT sw	RUN MODE position inhibits program halt address register. PROG. HALT position controls effects of program halt address register.	
14	(PROGRAM HALT ADDRESS REGISTER) thumbwheels	Allows address to be selected at which a program will halt.	
15	INPUT PARITY lt	Indicates detection of error while reading character information.	
16	I/O HOLD lt	Indicates that computer is delaying until I/O device is ready.	
17	INTERRUPT lt	Indicates execution of interrupt subroutine.	
18	OVERFLOW lt	Indicates that overflow fault has occurred in computation.	
19	IMP DIVIDE lt	Indicates improper divide has occurred or improper binary-to-BCD conversion has been attempted.	
20	HALT lt	Indicates that the halt flip-flop is set and no operations can take place except for interrupts.	
21	MASTER CLEAR P/B	Halts the computer; resets all registers; controls clock unit, ready and enable flip-flops of input/output channels, interrupt enable, input parity, overflow, and improper divide flip-flops. Stops all peripheral devices.	
22	SING OP P/B	Causes the computer to execute the command stored in the memory location indicated by the program register.	
23	FETCH STOP P/B	Causes the computer to execute the fetch cycle only.	
24	EXECUTE P/B	Causes the computer to execute the command set in the OP-code register.	
25	A, B, Z, PROG, INDEX REG P/B-lt	Indicates the contents of the A, B, Z, program and index registers and allows bit-by-bit entry.	
26	(Reset) P/B	Enables each register to be cleared to zero.	
27	OP-CODE register P/B-lt	Indicates the contents of the OP-code register and allows bit-by-bit entry.	
28	(Reset) P/B	Clears OP-code register, index bits, and indirect addressing bit to zero.	
29	INDEX P/B-lt	Indicates whether index register is to be used; allows bit-by-bit entry.	
30	IND ADDR P/B-lt	Indicates indirect address is part of instruction; allows manual entry.	
31	SENSE SWITCHES (1 through 6)	Provides manual control of programs.	

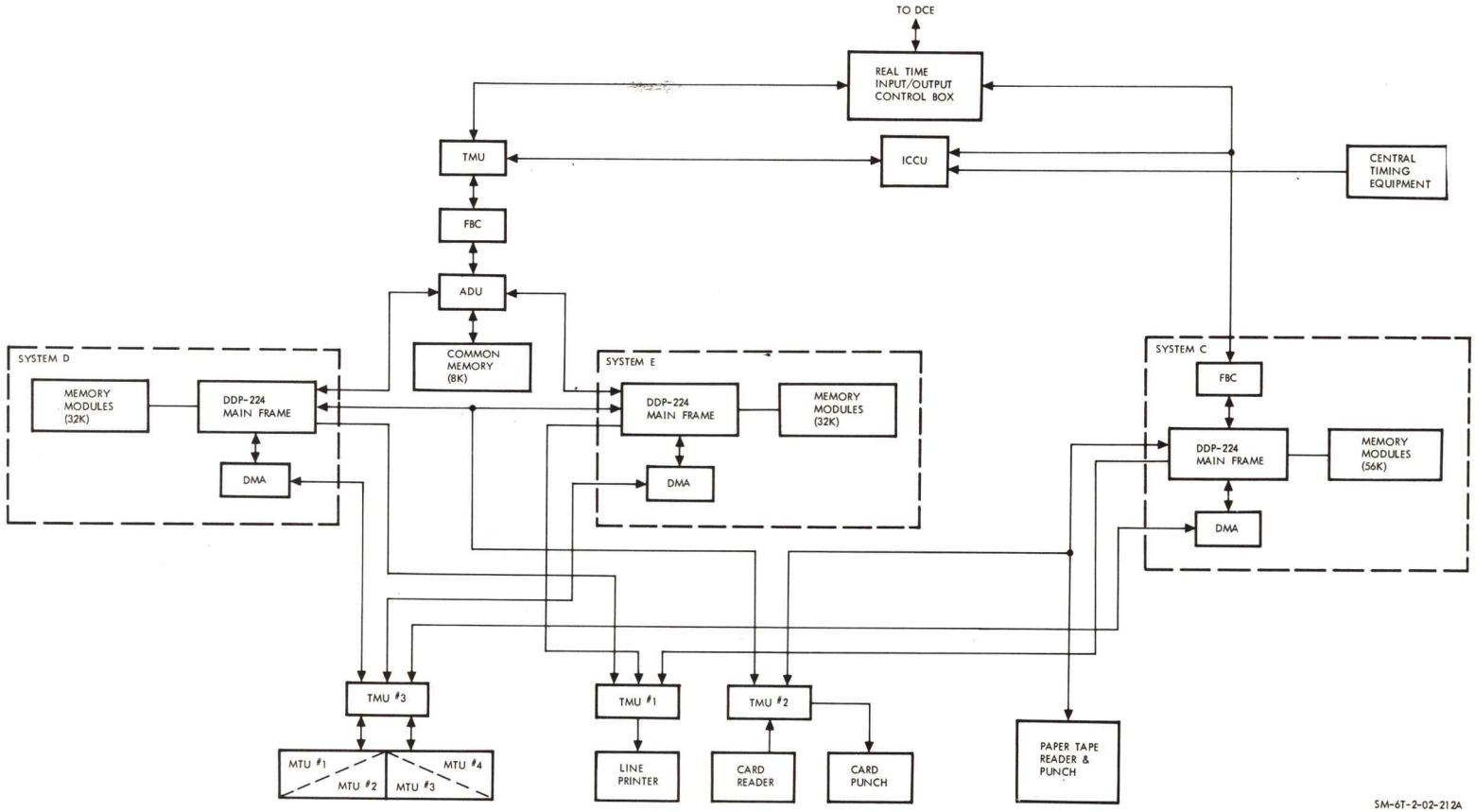

Figure 1-86. AMS Computer Complex Interface

1.5.2 PERIPHERAL EQUIPMENT.

The following list is the peripheral equipment used with the DDP-224 computer systems:

Item	Quantity
Magnetic tape units	4
Line printer	1
Card reader	1
Card punch	1
Paper tape reader	1
Paper tape punch	1
Typewriter	1 per computer

The devices listed are all input/output devices used for inserting or reading out computer data. Figure 1-86 illustrates the peripheral equipment and its interface with the AMS computer systems.

1.5.2.1 Magnetic Tape Units (MTU).

The magnetic tape units used in the AMS are model 9130. (See figure 1-87.) The units will record or play back digital information at the rate of 200 or 556 bits per inch at a tape speed of 75 inches per second. In the AMS, these units are used to load the computer memories with operational and diagnostic programs, record simulated spacecraft parameters, and to transfer the launch boost and initialization parameters into the computers. As illustrated in figure 1-82, each MTU is connected to the direct memory access channel of each computer through a time-multiplex unit. Control of the MTU is by computer command. Simultaneous operation of magnetic tape units is made possible by the TMU.

The manual controls located on the front of the cabinet are shown in figure 1-88. The function of the controls are listed in table 1-70.

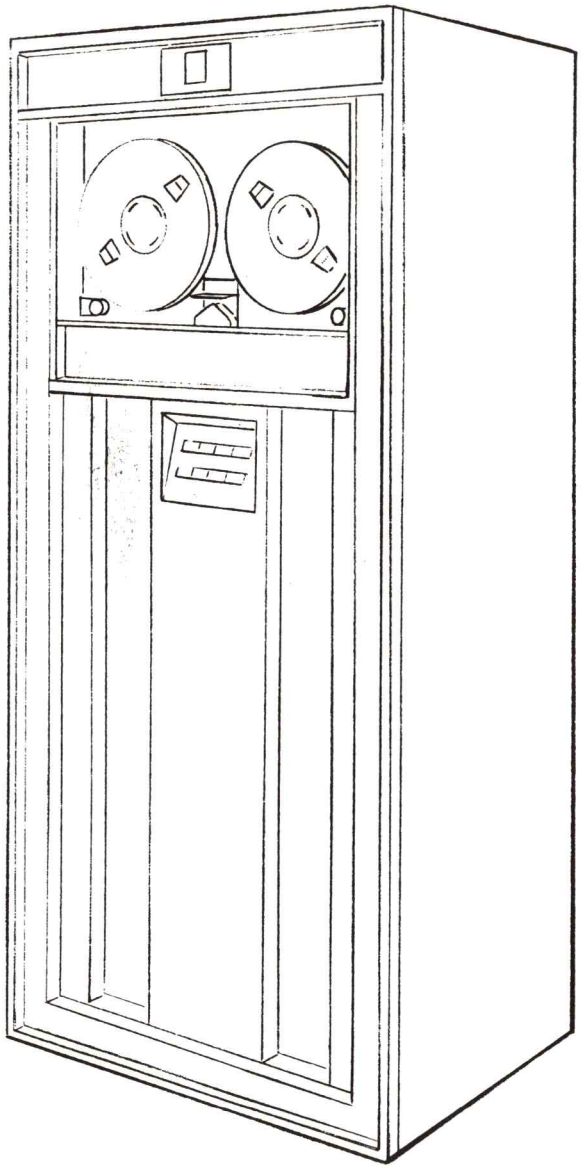

SM-6T-2-02-176 A

Figure 1-87. Magnetic Tape Unit

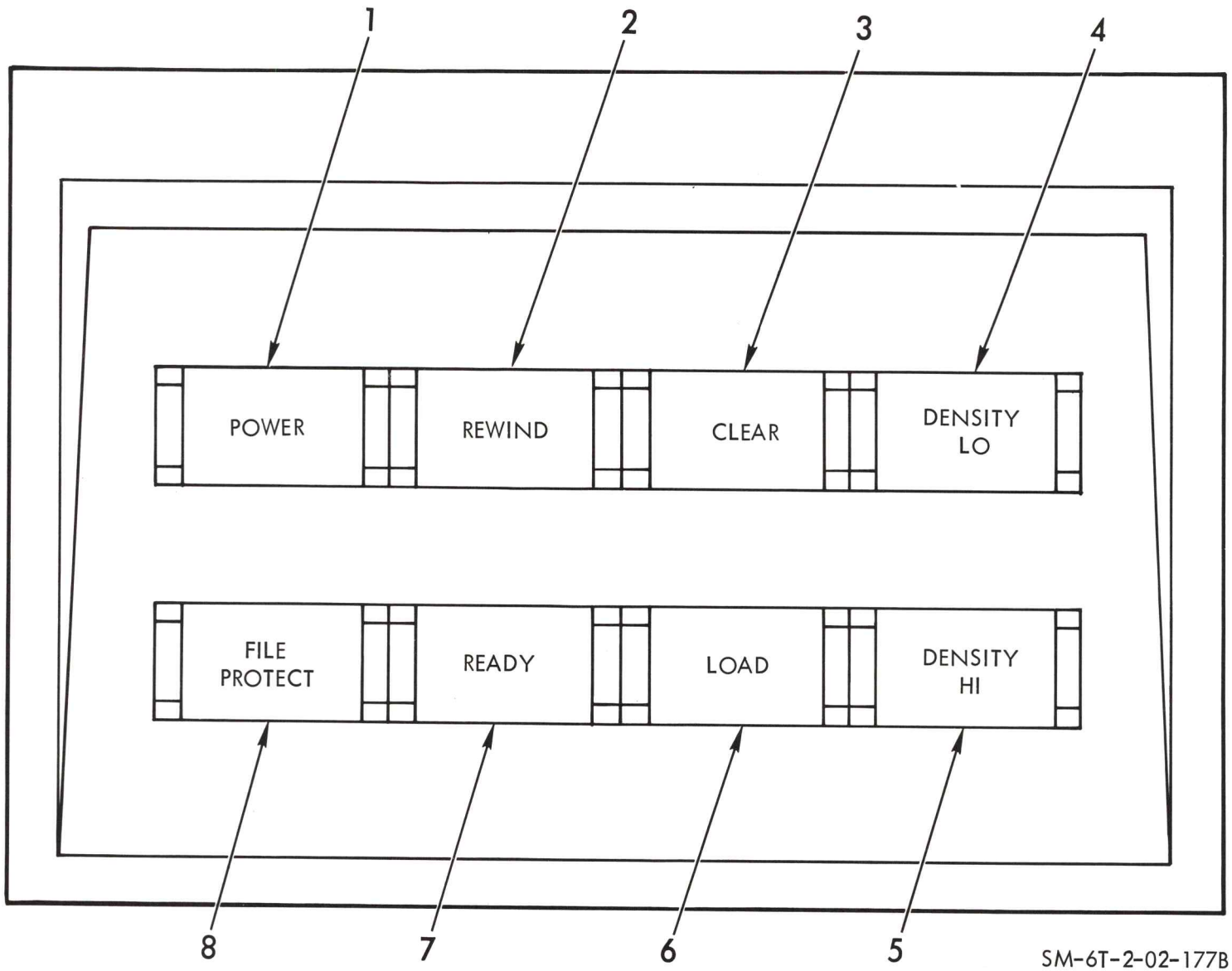

Figure 1-88. MTU Control Panel

Table 1-70. Magnetic Tape Unit Control Panel

Key	Nomenclature	Function	Remarks
1	POWER sw-lt	Applies and removes operational voltage. Indicates when power is on.	Switch must be held for approximately 2 seconds.
2	REWIND sw-lt	Causes tape to be moved onto supply reel at approximately 350 inches per second. Illumination of lt indicates rewind operation is in progress.	Tape will stop when load point is detected. If tape is stopped at load point when REWIND sw is depressed, an unload operation is performed.
3	CLEAR sw-lt	Removes and indicates all external command conditions are being cleared from transport logic.	Tape motion stops when CLEAR sw-lt is depressed.
4	DENSITY LO sw-lt	Selects and indicates that information transfer of a rate of 200 bits per inch has been selected.	
5	DENSITY HI sw-lt	Selects and indicates that information transfer rates of 556 bits per inch has been selected.	
6	LOAD sw-lt	Selects operation which pulls tape into load boxes, then moves tape forward to load point. Light indicates tape is positioned at load point.	
7	READY sw-lt	Places and indicates that unit is under external control.	Only CLEAR sw-lt is valid at panel when READY lt is on.
8	FILE PROTECT lt	Indicates a file protect ring is present in supply reel.	Only to be illuminated during write operations.
9	ADDRESS SELECT sw-lt (Above front door)	Selects and indicates assigned number to tape transport.	A white lt behind number indicates transport has been selected; a red lt indicates presence of fault.

1.5.2.2 Line Printer.

The line printer provides a permanent record of printed copy of desired computer system outputs. The model used with the AMS is the model DD/P 3000. Figure 1-89 shows the printer contained in a single console, housing two major components, the printer chassis and the electronics gate assembly.

The printer prints out 120 characters per line at 300 lines per minute. The drum and hammer technique is utilized. Sixty-one characters are contained in the drum. A continuously moving ribbon of paper is passed between the drum and hammer bank. The hammer provides the print impact upon coded input signals to provide a readout.

As shown in figure 1-83, the line printer interfaces with the time-multiplex unit. The TMU provides the switching between the computers and the line printer under computer command.

The control panel for the line printer is located on the front of the printer chassis. These controls, used for normal operation of the printer, are illustrated in figure 1-90 and functionally listed in table 1-71.

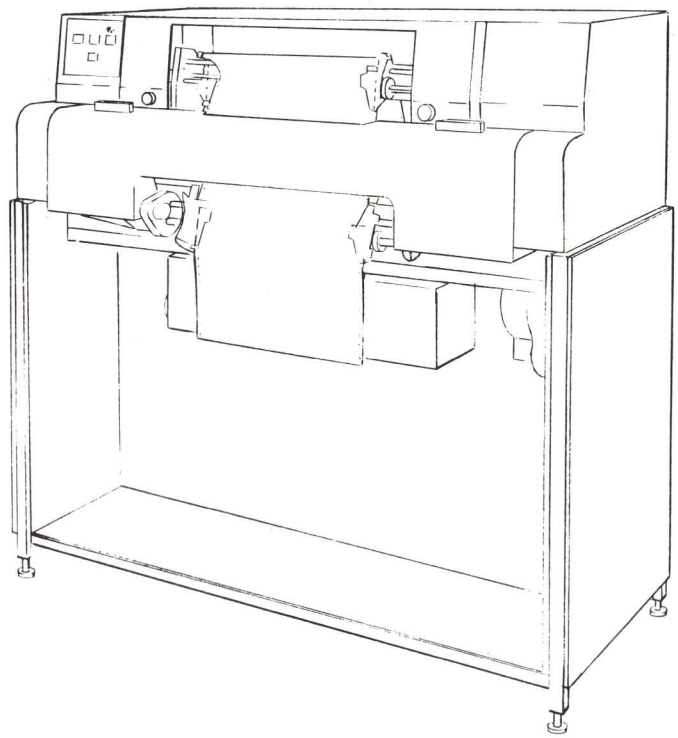

SM-6T-2-02-178

Figure 1-89. DD/P 3000 Line Printer

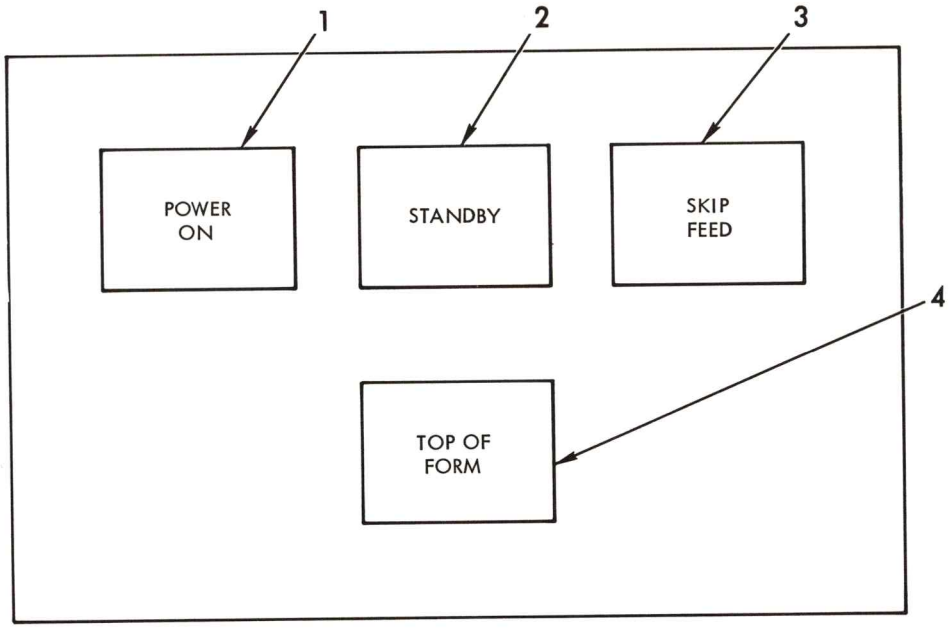

Figure 1-90. Line Printer Control Panel

Table 1-71. Line Printer Control Panel

Key	Nomenclature	Function	Remarks
1	POWER ON sw-lt	Controls main power to printer unit.	
2	STANDBY sw-lt	Places printer in print inhibit mode.	
3	SKIP FEED sw-lt	Advances paper position at fast rate.	
4	TOP OF FORM sw-lt	Positions paper to top of form.	

1.5.2.3 Card Reader.

The card reader serves to input information into the computer program and/or memory. Data is prepared on Hollerith punched cards for insertion into the computer system via the card reader. The reader used with the AMS is the model B122 (figure 1-91).

A general operational description is as follows: The card reader feeds standard punched cards from the hopper, through the read station, into the stacker at the rate of 200 cards per minute. The feed mechanism can be operated either locally or from a remote station. Figure 1-83 shows the interface between the card reader and computer.

The operator's panel is illustrated in figure 1-92, and the functions of the controls are listed in table 1-72. All switches, with the exception of the VALIDITY ON switch, are momentary make switches. In the case of the VALIDITY ON switch, one depression initiates the ON condition; the second depression is the OFF condition.

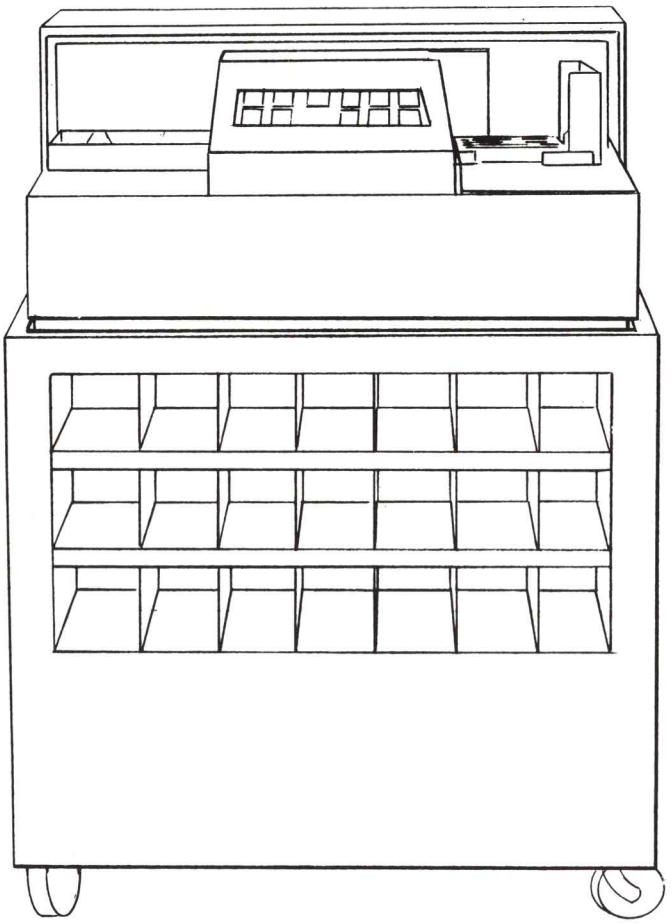

SM-6T-2-02-180

Figure 1-91. Card Reader

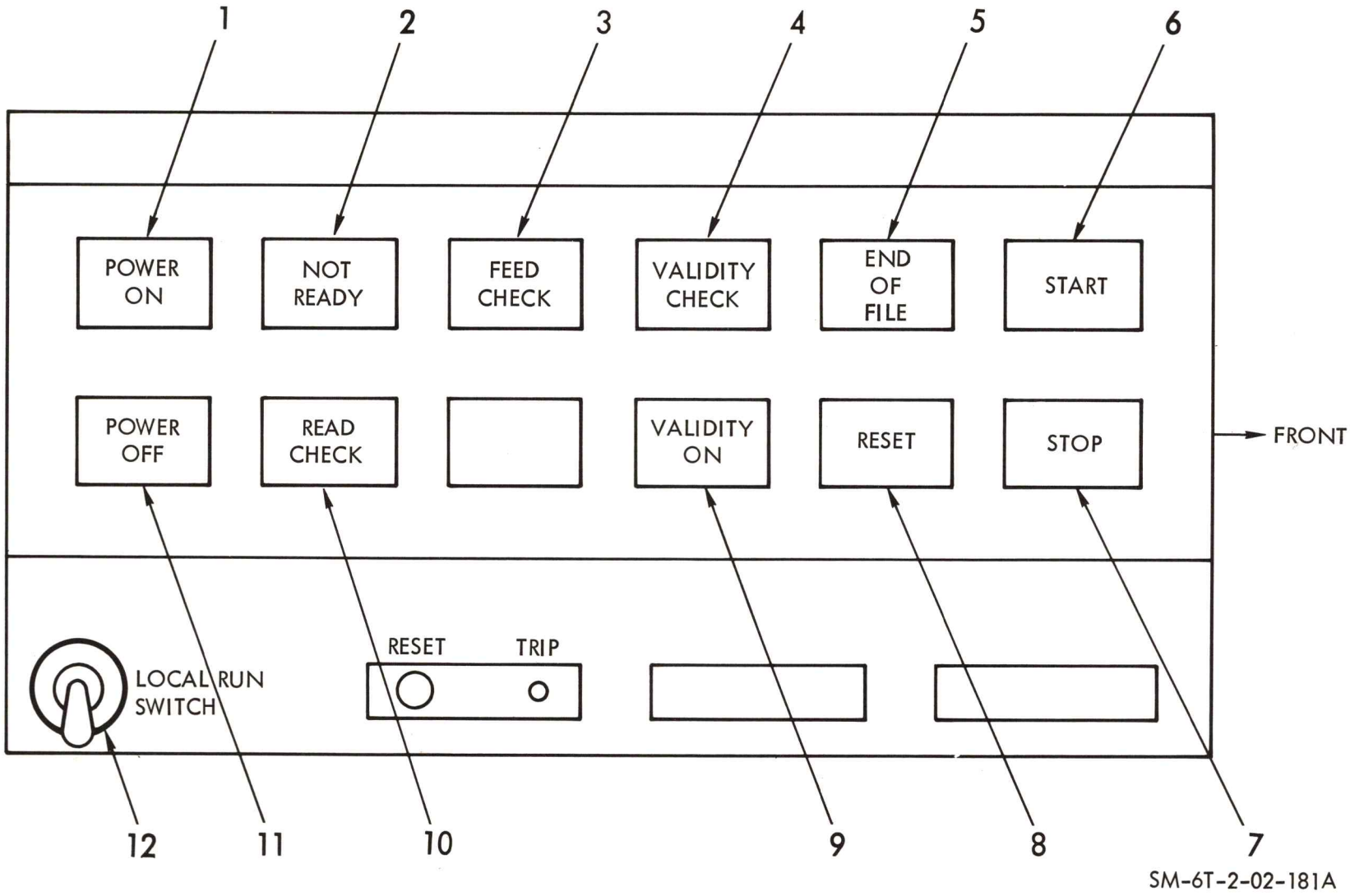

Figure 1-92. Card Reader Control Panel

Table 1-72. Card Reader Control Panel

Key	Nomenclature	Function	Remarks
1	POWER ON sw-lt	Initiates power-on sequence and lights NOT READY lt and POWER ON lt.	
2	NOT READY lt	Goes on whenever one of the following conditions exist: a. Power-on sequence incomplete b. No cards in hopper c. Stacker full d. Read or validity check in progress e. Feed check in progress f. STOP sw enabled.	
3	FEED CHECK lt	Goes on if card fails to feed.	
4	VALIDITY CHECK lt	Indicates invalid character is sensed.	
5	END OF FILE sw-lt	Enables processing of cards after last card is fed from hopper.	
6	START sw	Puts card reader in ready condition and extinguishes NOT READY lt.	
7	STOP sw	Places card reader in not ready condition.	
8	RESET sw	Extinguishes VALIDITY CHECK, READY CHECK, and FEED CHECK lt.	
9	VALIDITY ON sw-lt	Causes validity check of each card character.	
10	READ CHECK lt	Indicates failure of exciter lamp or circuitry.	
11	POWER OFF sw-lt	Removes power from power supply and extinguishes POWER ON lt.	
12	LOCAL RUN SWITCH		Located behind control panel.
	LOCAL	Enables continuous card feed from hopper.	
	RUN	Enables remote operation of card reader.	

1.5.2.4 Card Punch.

The model B303 card punch, illustrated in figure 1-93, is supplied to assist in program preparation. The card punch has the capability of processing 100 cards per minute. The card punch operation is divided into four cycles: card feed, card punch, checking, and stacking. The card punch interface (figure 1-83) receives, stores, and processes the data from the DMA for use by the card punch. A time-multiplex unit provides the switching between computers and the card reader and punch under computer control.

The card punch control panel is located on the front of the unit as shown by figure 1-93. The panel controls and their functions are illustrated in figure 1-94 and defined in table 1-73.

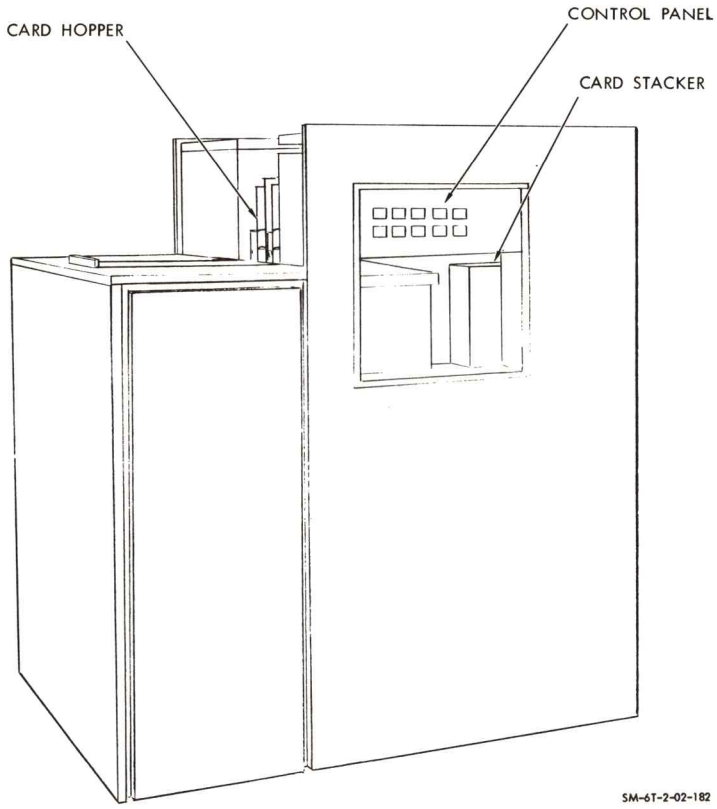

Figure 1-93. B303 Card Punch

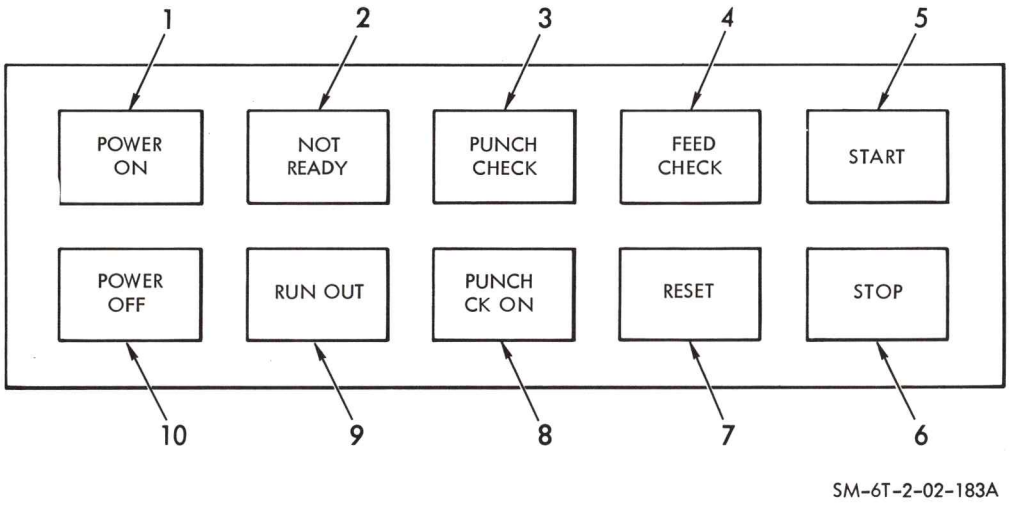

Figure 1-94. Card Punch Control Panel

Table 1-73. Card Punch Control Panel

Key	Nomenclature	Function	Remarks
1	POWER ON START sw-lt	Applies line power to internal supplies. Lights NOT READY lt.	
2	NOT READY lt	Indicates unit is not ready for operation. Lights when any of the following conditions exist: a. Power on-sequence incomplete b. No cards in hopper c. START P/B not depressed d. Stacker full e. STOP sw depressed.	
3	PUNCH CHECK lt	Indicates card has not been punched.	
4	FEED CHECK lt	Indicates failure in card feed or empty hopper.	
5	START sw-lt	Causes card to feed into ready station.	
6	STOP sw-lt	Stops operation of unit. Lights NOT READY lt.	
7	RESET sw-lt	Resets punch and feed check circuitry. Lights NOT READY lt.	
8	PUNCH CK ON lt	Indicates that punch check circuitry is operating.	
9	RUN OUT sw-lt	Causes last punched card to be fed to stacker. Clears cards from feed.	
10	POWER OFF sw-lt	Removes line power from unit.	

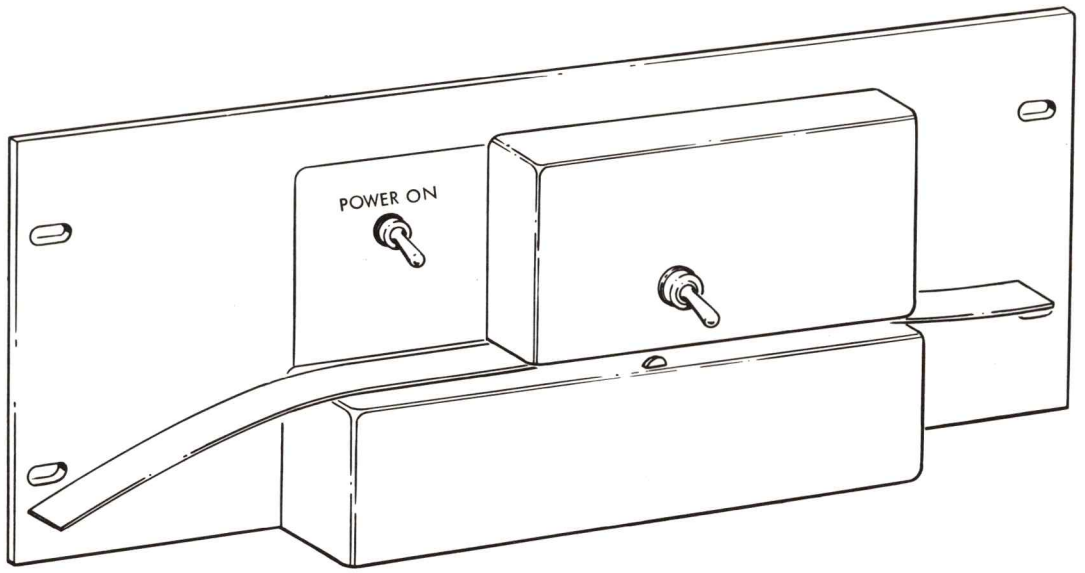

SM-6T-2-02-184

Figure 1-95. Paper Tape Reader

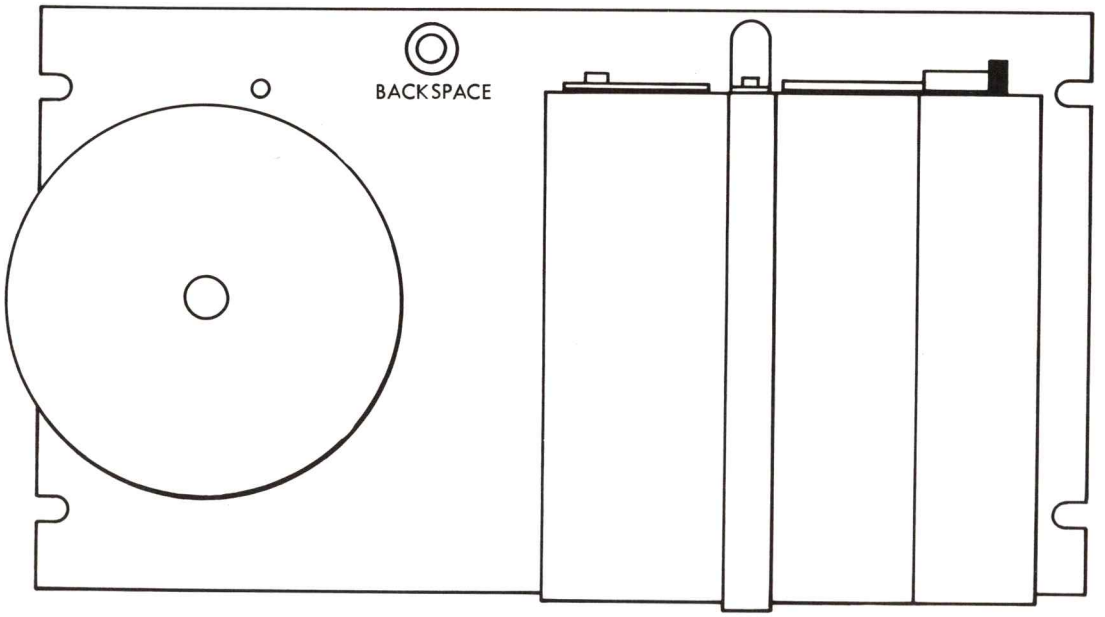

SM-6T-2-02-185

Figure 1-96. Paper Tape Punch

1.5.2.5 Paper Tape Reader.

Included in the AMS is the model 2500 paper tape reader. The reader is an unidirectional perforated tape reader using standard or mylar tape. The unit reads eight data channels plus a sprocket hold. The tape reader, illustrated in figure 1-95, has two modes of operation, continuous or pulsed. In the continuous mode, the units read at a rate of 300 characters per second. In the pulsed mode, the unit stops after reading each character. The interface logic (figure 1-83) between the tape reader and the character channel converts the character pulses into a form compatible for use by the computer.

The paper tape reader may be loaded without removing power to the unit by placing the READY-LOAD switch (figure 1-95) to the LOAD position. The READY position of this switch enables the normal operation of the unit.

1.5.2.6 Paper Tape Punch.

A self-contained, high-speed, paper tape perforator is supplied with the computer system. The punch is a synchronous unit capable of punching eight-channel, paper recording tape at a rate up to 110 characters per second. Data from the computer is transmitted to the paper tape punch via the input/output character channel and the tape punch interface. The interface converts the data into octal-coded character pulses compatible for use by the tape punch. The unit is illustrated in figure 1-96, and the interface with the computer is shown in figure 1-83.

1.5.2.7 Typewriter.

A series 73, Selectric typewriter is supplied with each computer. The typewriter is a 15 character-per-second revolving ball machine that utilizes a type head and keyboard arrangement intended for use with each computer. The carriage of the typewriter is 15 inches long with a 13-inch writing line. The type ribbon and spool are contained in a snap-in carriage to allow easy replacement.

The typewriter contains machine functions; i.e., tab, space, upper case, backspace, etc., and coded characters similar to a standard typewriter. Communications with the computer utilizes the binary-coded decimal form. The typewriter is connected to the computer via the typewriter interface logic and input/output character channel (figure 1-83). The typewriter interface logic converts the characters into a form compatible for use by the computer and functions in reverse for data being transmitted to the typewriter. Operation of the typewriter is controlled and monitored by OCP commands and sense lines. Interlock controls are provided to inhibit typewriter use except when selected. Figure 1-97 illustrates the Selectric typewriter, and table 1-74 defines keyboard functions.

The typewriter provides the following control and monitor capabilities at the IOS:

- During freeze mode, changes variables being recorded on X-T or X-Y recorders.
- During freeze mode, interrogates and prints out contents of any memory location.
- Notifies that error has been found.
- Inserts date and time of day into computer to update initialization points.
- Prints out special messages; e.g., notifies instructor of functions to be performed for premission setup.

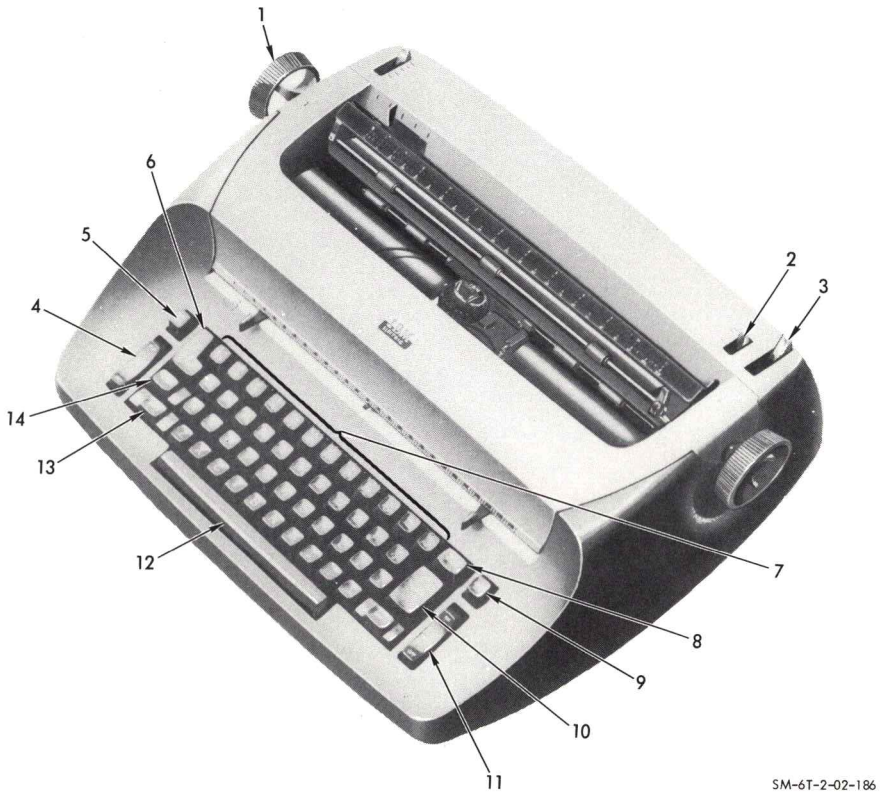

Figure 1-97. Typewriter

Table 1-74. IBM Selectric Typewriter

Key	Nomenclature	Function	Remarks
1	Platen control	Allows platen to be rotated freely in either direction.	
2	Line space lever	Allows selection of either single or double spacing.	
3	Paper release lever	Enables positioning or removal of paper.	
4	Tab control P/B	Enables a clear or set of tab settings.	
5	MARGIN RELEASE P/B	Allows releases of right and left margins.	
6	Tab P/B	Moves carriage to tab setting.	
7	Keyboard P/B	Enables type of standard and special characters.	
8	BACKSPACE P/B	Moves carriage toward left margin.	
9	INDEX P/B	Permits vertical spacing.	
10	CARRIAGE RETURN P/B	Returns carriage to left margin.	
11	Motor control	Activates typewriter.	
12	Space bar	Advances carriage toward right margin.	
13	SHIFT key	Shifts type to upper case lettering.	
14	SHIFT LOCK	Locks shift key in position.	

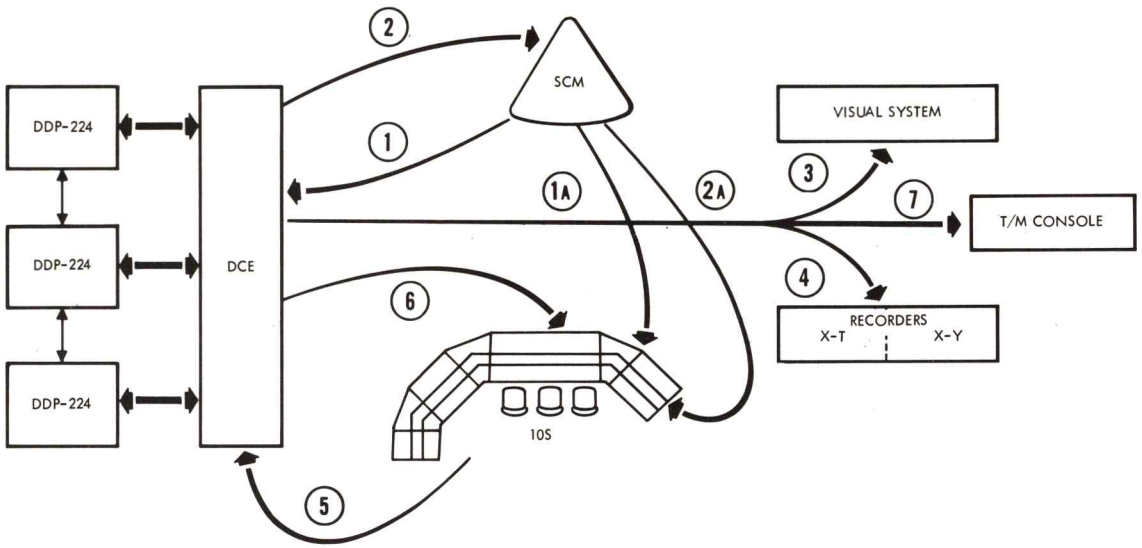

1A
CM CONTROL STATUS

2A
CM INDICATOR REPEATERS

1
ANALOG
ROTATION HAND CONTROLS
CABIN TEMPERATURE CONTROLS
COMMUNICATION CONTROLS
GIMBAL POSITION CONTROLS
FLOODLIGHTS
SEXTANT (HAND)
ECS CONTROLS

DISCRETES (DIGITAL BIT)
TRANSLATION CONTROLS
SWITCHES
CIRCUITBREAKERS
MOMENTARY SWITCHES
ATTITUDE IMPULSE CONTROL

DIGITAL WORDS
CDU'S
TRUNNION ANGLE
SHAFT ANGLE
ATTITUDE SET CONTROL

2
ANALOG
GIMBAL POSITION INDICATORS
BAROMETRIC ALTIMETER
MIN-SEC TIMER
DELTA V REMAINING COUNTER
CSS INDICATORS
RCS INDICATORS
ECS INDICATORS
EPS INDICATORS
SPS INDICATORS
SPACECRAFT RECORDERS
FDAI

DISCRETES
ANNUNCIATORS
FLAGS
LAMPS
S/C RECORDERS

DIGITAL WORDS
CDU'S
TRUNNION ANGLE
SHAFT ANGLE
RCS PROPELLANT INDICATORS

3
ANALOG
SUN SHAFTING
WINDOW STAR DISPLAY
MEP WINDOWS
TELESCOPE
SEXTANT
RENDEZVOUS IMAGE DISPLAY

DISCRETES
SUN SHAFTING
WINDOW MEP
TELESCOPE

DIGITAL WORD
SEXTANT
TELESCOPE

4
ANALOG
X PARAMETERS
Y PARAMETERS

DISCRETES
TIME DRIVE

5
DISCRETES
TRAINER CONTROLS
RCS SCALE CONTROL
INTEGRATED/NON-INTEGRATED MODE

DIGITAL WORD
INITIAL COND
MIU

6
ANALOG
CRT (SEXTANT-TELESCOPE)
AURAL CUE

DISCRETES
1 SEC PULSE
SMOKE CONTROL
AURAL CUE

DIGITAL WORD
ORBITAL POS
GMT TIME TO-FROM LAUNCH
MARK ERROR
MIU DISPLAY

7
DIGITAL WORD
CENTRAL TIMING
G&N

ANALOG
SPACECRAFT SYSTEM SENSORS

SM-6T-2-02-215A

Figure 1-98. AMS Flow Diagram

1.5.3 DATA CONVERSION EQUIPMENT.

The purpose of the data conversion equipment is to translate output signals from the computers and other AMS functional units to appropriate format for their addressed input points or channels. Simulation signals in the AMS complex are in three forms: digital words, digital bits, and analog voltages. Outputs from the computers are in word-serial, 24-bit parallel words. Figure 1-98 illustrates the signal flow between the major components of the AMS and the DCE in terms of simulation functions.

The AMS data conversion equipment is identified in two groups, internal and external. External DCE is defined as that data conversion equipment electrically located between various IOS and SCM units and the interface patch panel. Internal DCE is electrically located between the computers and the patch panels, and includes:

- Digital-to-analog converters
- Digital-to-analog converters (fast)
- Analog-to-digital converters
- Digital bit input
- Digital bit input (memory)
- Digital word input
- Digital bit output
- Digital word output (direct)
- Digital word output (relay)
- Guidance and navigation word buffer
- Computer-to-computer buffer
- Stabilization and control system hand controller input system
- DCE control unit

The external DCE consists of the following:

- Malfunction insertion unit
- Central time equipment
- Integrated up-data link
- Digital-to-resolver converter
- Analog-to-resolver converter

Figure 1-99 shows the flow of information from the digital computers via the control unit and to and from the individual conversion devices. Transfer of information between the computers and the control unit takes place via the fully-buffered channel of each computer. Transfer of data is under control of the real-time input/output program, which is initiated 20 times per second.

1.5.3.1 DCE Control Unit.

The DCE control unit acts as the switching center between the DCE and the computers. The control unit responds to requests from the different computers to communicate with specific devices and makes the connection when the particular device is free to communicate.

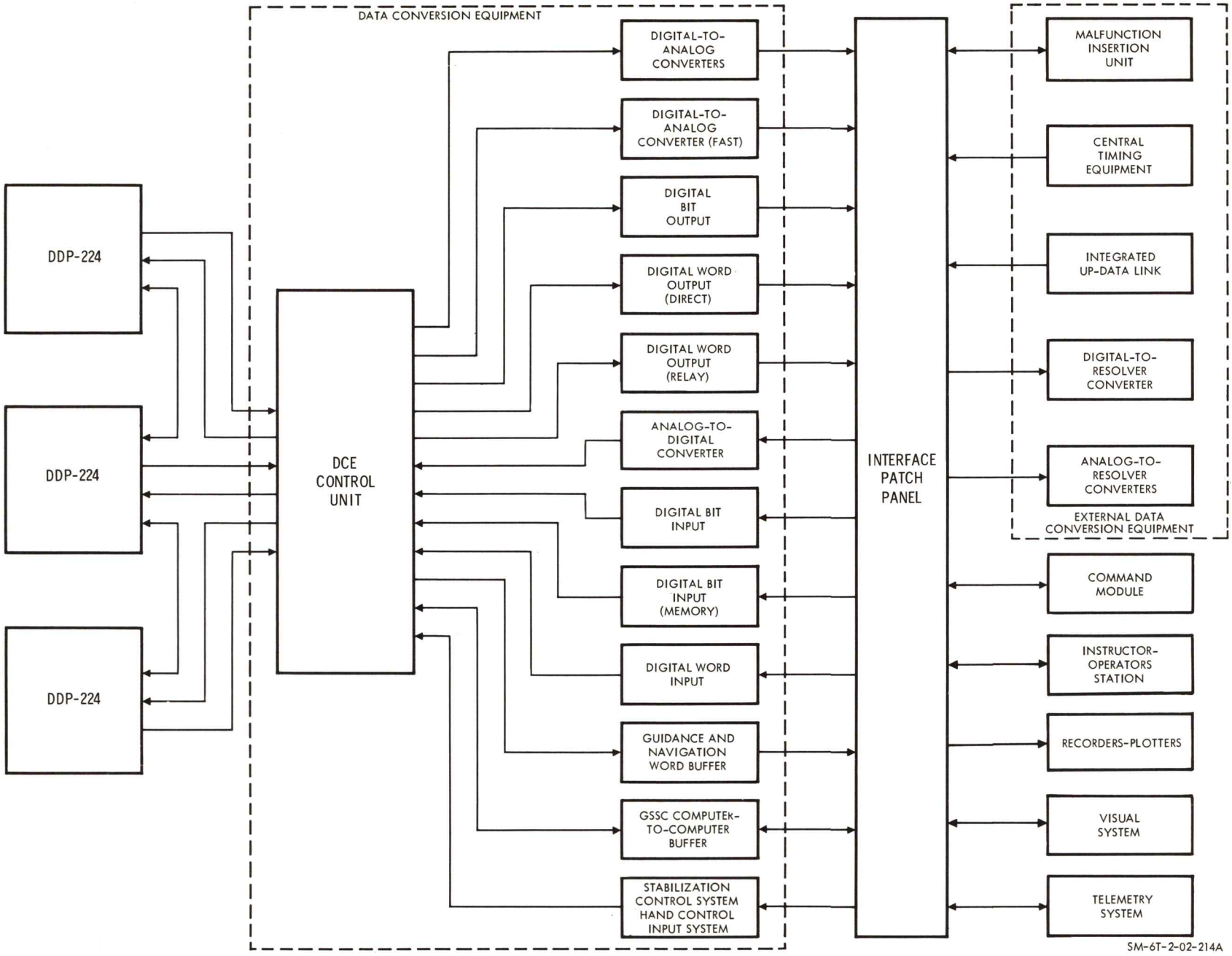

Figure 1-99. AMS Computer-DCE Interface

1.5.3.2 Digital-to-Analog Converter.

The purpose of the digital-to-analog converter is to convert to analog signals the 24-bit data words received from the computer. The digital-to-analog (fast) converters are used in situations where the analog values must follow changes in the digital word within a few microseconds, such as FDAI rate and error indicators.

1.5.3.3 Analog-to-Digital Converter.

The purpose of the analog-to-digital (A/D) converter is to convert analog signals into 12-bit digital words to be transmitted to the digital computers via the DCE control unit.

1.5.3.4 Digital Bit Input.

The function of the digital bit input (DBI) is to receive the digital bit inputs from switches or circuit breakers of the AMS, place the bit in the least significant bit position of the 24-bit word, and then transmit the word to the computer.

The digital bit input (memory) (DBIM) performs the same function as the DBI, except the inputs to the DBIM are from momentary switches whose activation may be less than the 50-millisecond iteration rate of the computer. Flip-flop storage is the memory device used to record the depression of the momentary switches.

1.5.3.5 Digital Word Input.

The function of the digital word input (DWI) is to transfer to the computer 24-bit words originating at the AMS. Examples of AMS functions that originate as DWIs are inputs from the CDUs, MIUs, attitude set controls, etc.

1.5.3.6 Digital Bit Output.

The purpose of the digital bit output (DBO) is to receive a single bit transmitted from the computer as the least significant bit of a 24-bit word, store the bit in a one-bit register, and then direct the output of the register to a relay driver. The contacts of the relay are used to control simulator functions, such as flag indicators, indicator lamps, and other devices requiring a discrete signal.

1.5.3.7 Digital Word Output (Direct).

The digital word output (direct) (DWOD) receives and stores 24-bit words received from the computer via the control unit. The words are then transferred to the simulator to drive items such as CDUs and telescope and sextant displays. The digital word output (relay) performs the same function as the DWOD, except the inputs to the simulator are held by relay action.

1.5.3.8 Guidance and Navigation Word Buffer.

The purpose of the guidance and navigation word buffer is to receive parallel data words representing the output of the simulated G&N computer, convert the words into serial form, and transmit the words to the PCM telemetry equipment. Parallel data words are received as 17-bit words at a rate of 100 words per second. These words are converted in serial form and are sent to the PCM telemetry as 40-bit words. Hand switches on the telemetry console can introduce failures of any of the 40 bits.

1.5.3.9 Computer-to-Computer Buffer.

The computer-to-computer buffer is used to transmit trajectory data between the AMS and the GSSC complex. The buffer is essentially a serial-to-parallel and parallel-to-serial converter which uses a magnetic core memory and shift register to accomplish the conversion. The information to be exchanged is in parallel form in the computers, but it is transmitted in a serial form.

1.5.3.10 SCS Hand Controller Input System.

The purpose of the SCS hand controller input system is to receive, store, and transmit to the DDP-224 computer inputs received from the rotation, translation, and minimum impulse controls. In some cases, the duration of these inputs is timed in 1-millisecond intervals. Another function of the SCS input system is to store any failure indications transmitted to the SCS system from the computer and to restore the system to normal after completion of data transfer.

1.5.3.11 Malfunction Insertion Unit.

The purpose of the malfunction insertion unit (MIU) is to provide the means for initiating and monitoring simulated malfunctions. The MIU is used to perform the following functions:

- Enters any malfunctions into computer program
- Interrogates status of any active malfunction
- Clears any active malfunction from computer program
- Clears all active malfunctions from computer program

Keyboard-initiated malfunctions are entered during the mission by means of a 24-bit word formed by the activation of the MIU control panel switches. (See figure 1-67.) The DISPLAY switch, which indicates where the malfunction shall be displayed on the MIU control and display panel, sets bits 4 through 7 of the word. The SYSTEM SELECT switch sets bits 8 through 15 which are the alphabetic portion of the MIU code number. The KEYBOARD switches insert the numerical portion of the MIU code number on the verify register and set bits 16 through 24. The word enters all computers via a digital word input (DWI) under control of the real-time input/output program. Each computer then enters a routine to determine the validity of the malfunction. The result of the validity check is transmitted from the computer via a digital word output relay (DWOR) to the MIU control and display panels.

If the malfunction is valid, other action can now be taken with the instruction switches. Depression of the MALFUNCTION ENTER switch activates the malfunction by setting bit two of the DWI and setting a sense line. The malfunction can be removed from the system by depression of the MALFUNCTION CLEAR switch. Bit one of the DWI and a sense line are set by this action.

If the validity check results in an invalid malfunction, the INSTRUCTION INVALID light is illuminated by means of a digital word output (relay) (DWOR) from the computer. At this point, depressing the CONTROL PANEL RESET switch extinguishes all lights and resets conditions to initiate another malfunction.

All active malfunctions, with the exception of those which are time dependent, may be cleared by depression of the MASTER CLEAR ALL SYSTEM switch. Time-dependent malfunctions can be cleared within 90 seconds prior to activation by depressing the 10 DISPLAY switch and the MALFUNCTION CLEAR switch.

1.5.3.12 Central Timing Equipment.

The purpose of the central timing equipment (CTE) is to produce the following signals for use in the AMS:

- 512 kc
- 6.4 kc
- 1-second pulses
- 50-millisecond real-time interrupt signal
- Binary time word
- Binary-coded-decimal time word

The 512-kc signal is the basic timing signal used in the simulation of the PCM telemetry system. The 1-second pulses are also used in the PCM telemetry simulation as synchronizing pulses. The 6.4-kc signal is used in the simulation of the 400-cycle frequency synchronization of the three power inverters. The 50-millisecond real-time interrupt, the binary time word, and binary-coded-decimal time word are all used in the computer system.

As illustrated in figure 1-100, alternate reference frequency sources are available to the CTE. During a nonintegrated mission, a 1024-kc crystal clock supplies the reference frequency to the CTE. During an integrated mission, a 1000-cps signal is received from the NASA facilities and multiplied to 1024 kc. The signal is then divided into the frequencies desired and gated out with provision for simulating failures. The time words are developed from the 50-millisecond pulses gated into a counter chain which counts half-seconds, seconds, minutes, hours, and days of the month. The resulting time words are converted into BCD and binary form before being transmitted to the computers.

Provision is made through switches and buffers to enable the times to be initialized from external sources. Switches can be set up to indicate a particular minute; the 1-minute trap and 1-pulse-per-second signal will then automatically start the counters on the next integral minute.

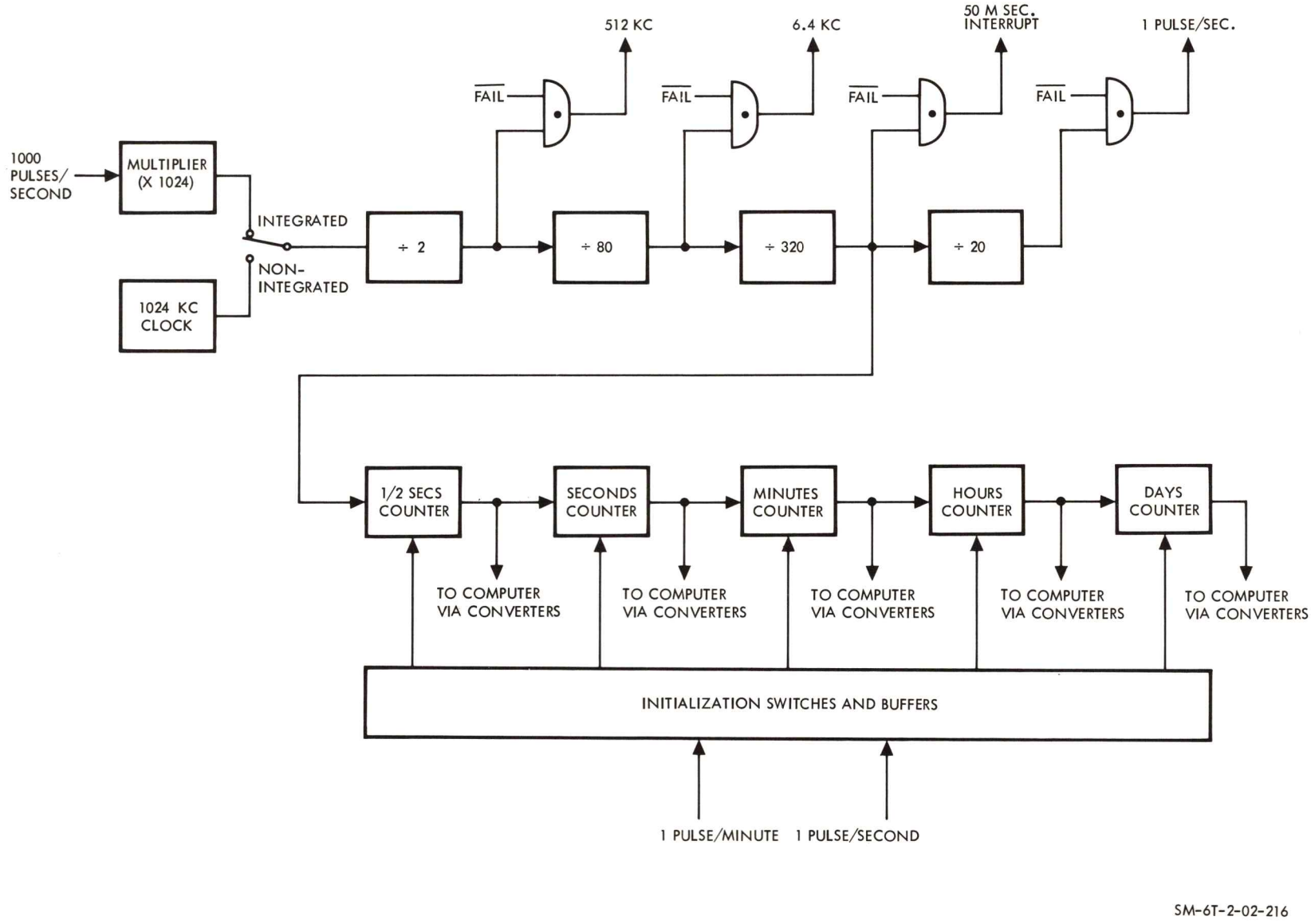

Figure 1-100. CTE Simplified Drawing

1.5.3.13 Integrated Up-Data Link.

(Operational description of integrated up-data link is included under "Telecommunications System" description in section 2 of this volume.)

1.5.3.14 Digital-to-Resolver Converter.

The digital-to-resolver converter is used to accept and convert binary angles (sign and magnitude) from the DDP-224 computer to analog 400-cycle signals compatible with the resolvers used in the telescope simulation of the AMS.

1.5.3.15 Analog-to-Digital Shaft Position Encoder.

The purpose of the analog-to-digital shaft position encoder is to accept and convert a shaft angle to equivalent binary digital signals compatible for use in the DDP-224 computer.

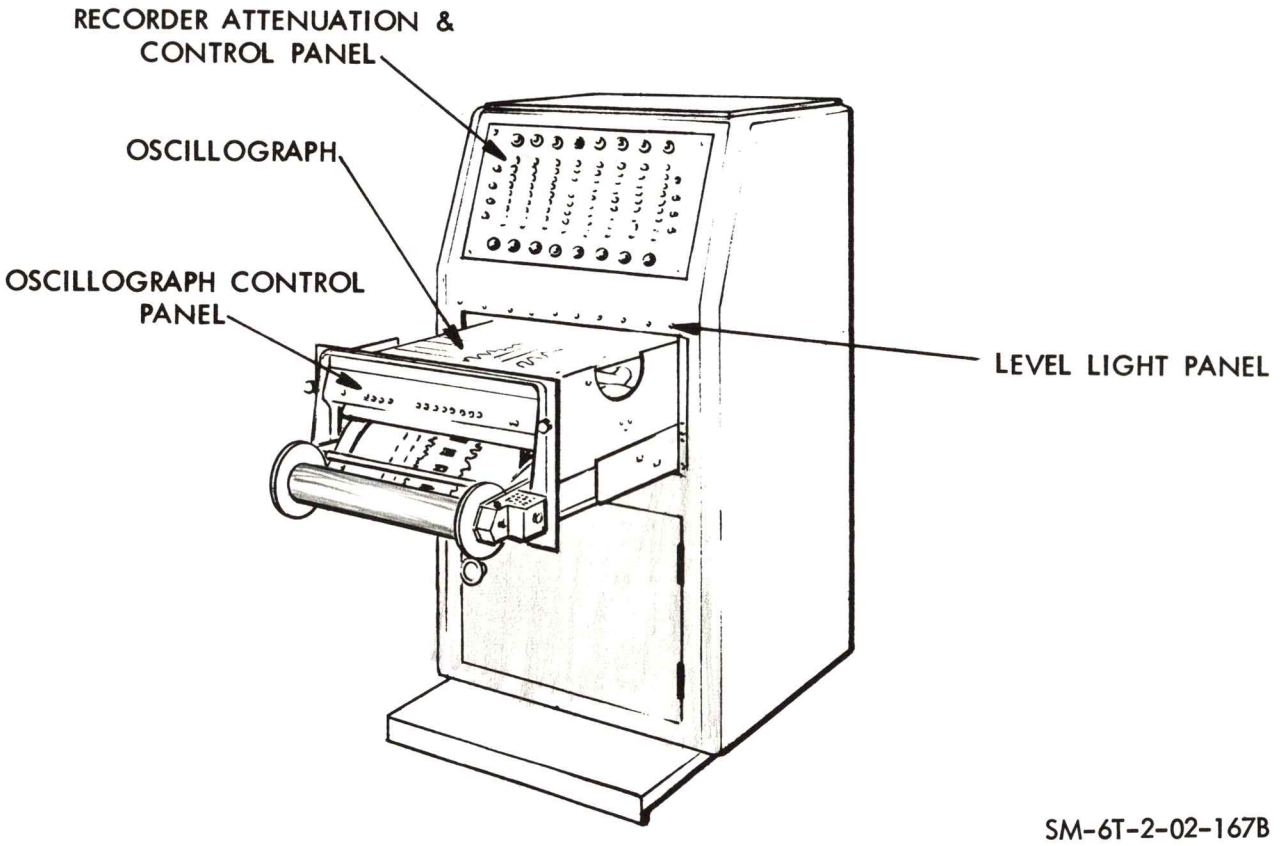

Figure 1-101. X-T Recorder

1.6 RECORDING EQUIPMENT.

1.6.1 X-T RECORDER.

These paragraphs describe and illustrate the major components and controls incorporated into the Mark 200 recording system which is employed for the X-T recorder. The recorder is an eight-channel recording system which incorporates an oscillograph installed horizontally in a drawer in the unit pedestal. Attenuator and recorder functions (including the remote-operate) are actuated by pushbutton controls. Rectilinear pen motion produces records on rectangular coordinate charts graduated in 50 divisions. Recorder pens utilize pressurized fluid. The oscillograph has 12 selectable chart speeds. The complete system, illustrated in figure 1-101, is contained in a 54-inch high console with a sloped front control panel and castered base. There are three such recorders included with each AMS.

The attenuator and control panel (figure 1-102) is an input signal device located on the top front of the console. It contains external function switches to enable remote operation of the system. The functional description of the controls on this panel are listed in table 1-75.

The oscillograph contains pens, penmotor, chart paper, and the writing table. The oscillograph is mounted at desk level and displays up to 11 inches of chart on a flat writing surface. The oscillograph controls are illustrated in figure 1-103 and are functionally described in table 1-76.

The level light panel is located directly above the oscillograph on the front of the unit (figure 1-101). The panel components are illustrated in figure 1-104 and functionally described in table 1-77.

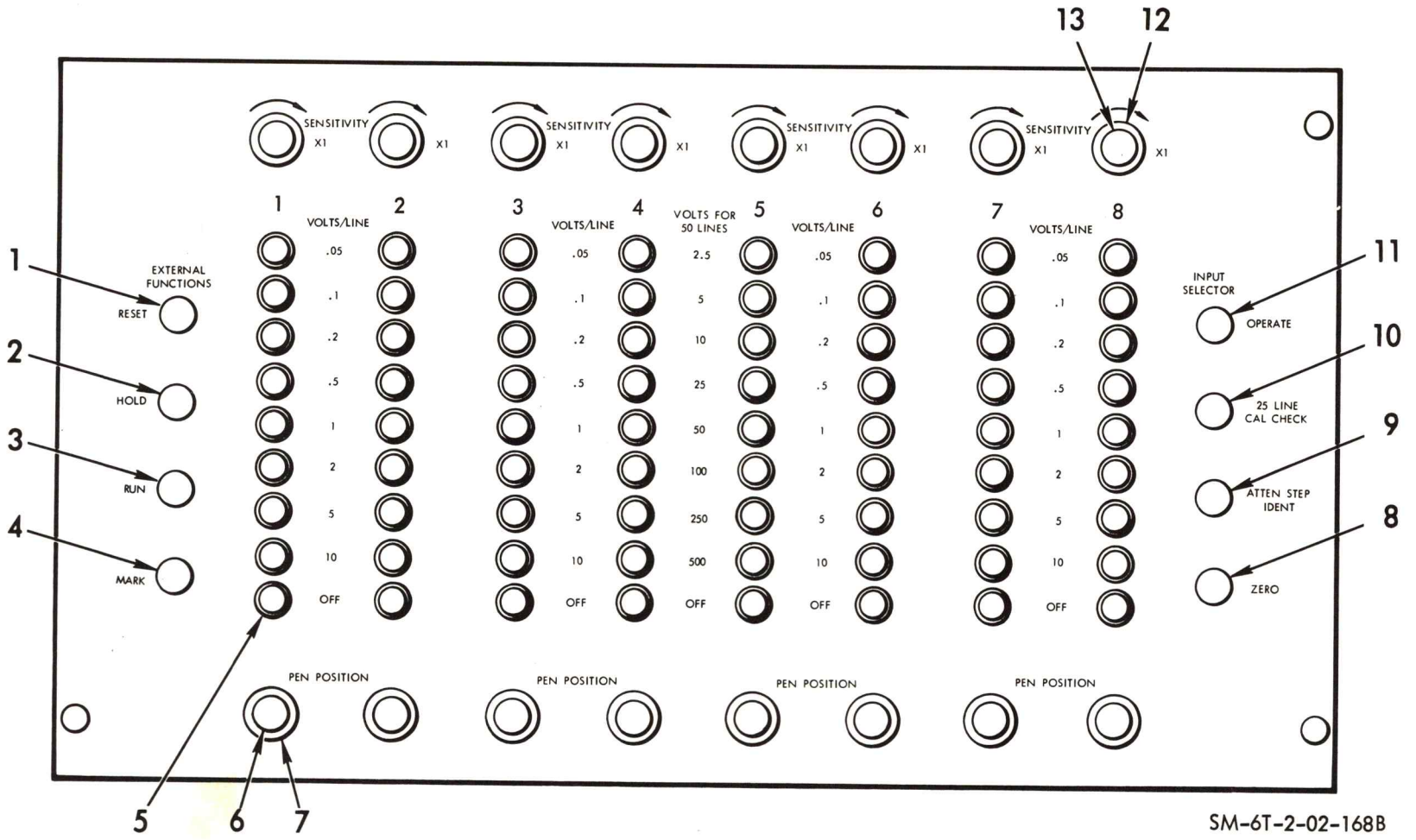

Figure 1-102. Attenuator Control Panel

Table 1-75. Attenuator Control Panel

Key	Nomenclature	Function	Remarks
	EXTERNAL FUNCTIONS		
1	RESET P/B	Resets pens to initial conditions.	
2	HOLD P/B	Enables computer hold of operation from recorder.	
3	RUN P/B	Enables control of computer run mode of recorder operation.	
4	MARK P/B	Operates left-hand event marker and deflects its pen toward center of chart.	
5	Attenuator P/B (72)	Enables selection of volts per chart line for each channel.	
6	PEN POSITION controls (8)	Permits each pen to be positioned anywhere within channel and use this position as a zero base.	
7	PEN POSITION locking knob	Locks pen in selected position to prevent inadvertent movement.	
8	INPUT SELECTOR ZERO P/B	Causes pens of all channels to return to selected zero positions.	
9	ATTEN STEP IDENT P/B	Causes all active pens to deflect and record attenuator settings and pen polarity sw settings.	
10	25 LINE CAL CHECK P/B	Used to check or calibrate drive amplifier system. Supplies a standard calibration input to all channels.	
11	OPERATE P/B	Enables normal operation of system.	
12	Locking knob	Prevents inadvertent movement of sensitivity control.	
13	SENSITIVITY control	Allows intermediate sensitivities to be selected between fixed P/B values. Controls must be fully CW to obtain P/B attenuation value.	

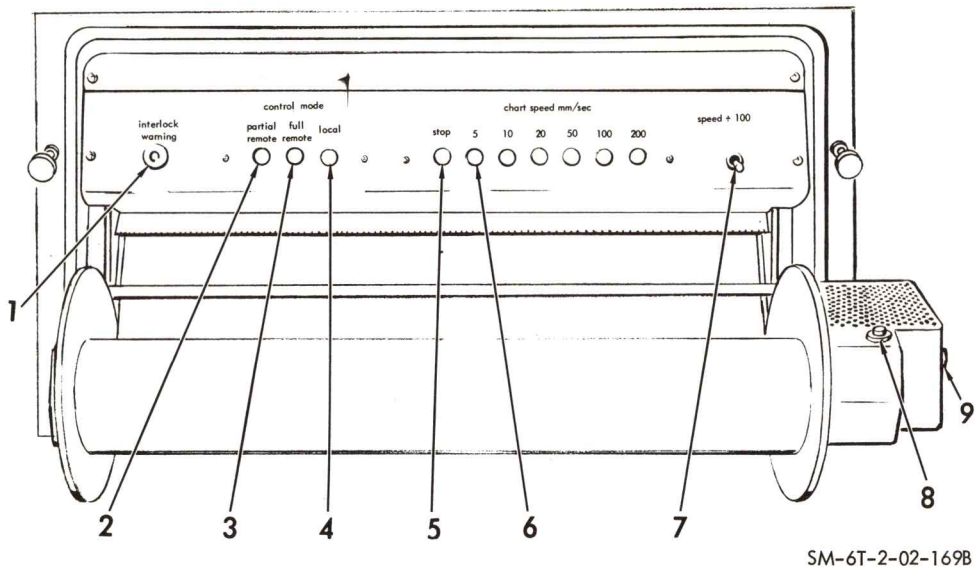

Figure 1-103. Oscillograph Control Panel

Table 1-76. Oscillograph Control Panel

Key	Nomenclature	Function	Remarks
1	INTERLOCK WARNING lt	Indicates one or both of interlock sw are open.	
	CONTROL MODE		
2	PARTIAL REMOTE P/B	Transfers chart drive on-off control to a remote location. Does not transfer speed control.	
3	FULL REMOTE P/B	Chart speed and on-off control is transferred to a remote location.	
4	LOCAL P/B	Full control of unit is enabled at control panel.	
	CHART SPEED MM/SEC		
5	STOP P/B	Stops chart drive and disables power to pens.	
6	CHART SPEED P/B	Enables chart drive speed relative to P/B depressed. Releases STOP P/B.	
7	SPEED ÷ 100 sw	Divides selected chart drive speeds by 100 when enabled.	
8	PAPER TAKE UP P/B	When depressed, takes up slack in paper and actuates paper take-up reel drive.	
9	TAKE UP SPEED control	Provides three speed control of paper drive.	

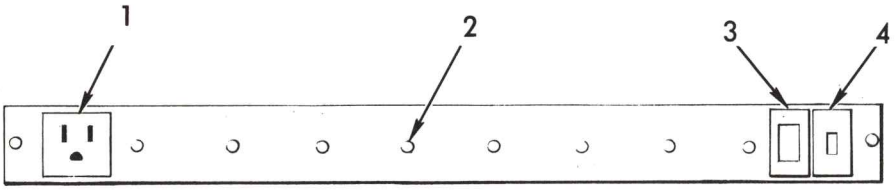

SM-6T-2-02-170A

Figure 1-104. Light Level Panel

Table 1-77. Light Level Panel

Key	Nomenclature	Function	Remarks
1	Convenience outlet	Supplies 115-volt 60-cycle power for use with any electrical device. Does not turn off with power sw.	
2	Amplifier level lt	Indicates by lamp intensity output magnitude of related amplifier.	
3	Main power lt	Light illuminates when power is on to unit.	
4	Main power sw	Applies power to entire unit.	

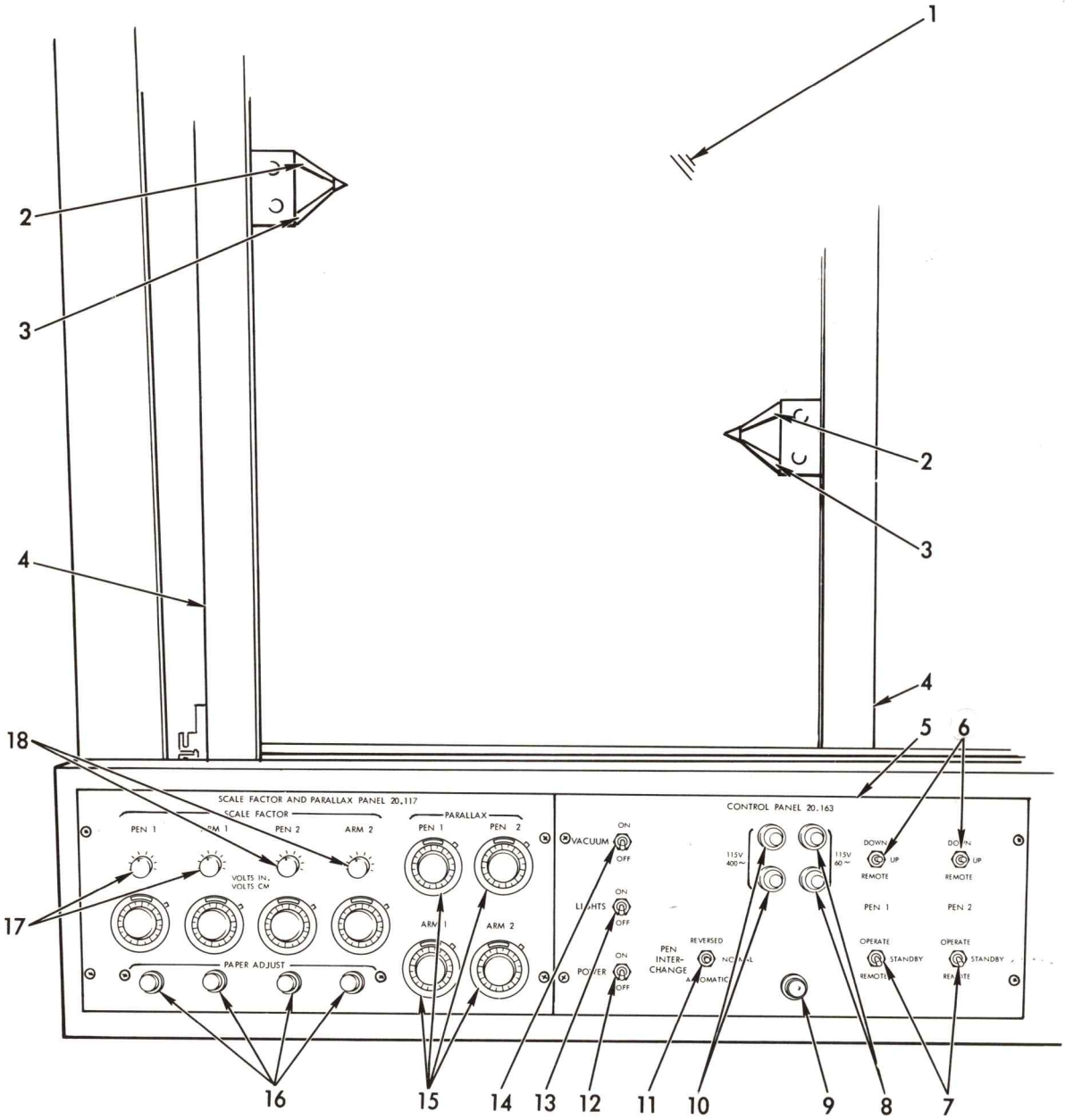

SM-6T-2-02-171B

Figure 1-105. X-Y Variplotter (30 x 30)

1.6.2 X-Y PLOTTERS.

Two plotter models, 205T and 1110E, are used with the AMS. They are located at the extreme left end of the IOS where they are readily accessible by the instructor/operator for adjustment or observation. Each plotter is mounted in a standard vertical rack with vertical plotting surfaces and dual pens for versatility. The plotting surface for the model 205T, illustrated in figure 1-105, is 30 x 30 inches. The controls and displays for this unit are functionally described in table 1-78. The plotting surface for the model 1110E, illustrated in figure 1-106, is 11 x 17 inches. The controls and displays for this unit are functionally described in table 1-79.

Table 1-78. X-Y Variplotter (30 X 30)

Key	Nomenclature	Function	Remarks
1	PLOTTING SURFACE	Plastic surface with grooves connected to a vacuum pump providing a plotting surface.	
2	TIMING PENS	Solenoid controlled, allowing recording of timing pulses.	
3	WRITING PENS	Allows plotting (inked lines) of one variable voltage as a function of a second variable voltage (move vertical Y).	
4	ARMS	Allows plotting of one variable voltage as a function of a second variable voltage (move horizontal X).	
5	CONTROL PANEL	Power control; see figure.	
6	PEN 1 and PEN 2 UP DOWN/REMOTE sw		
	UP	De-energizes lift coils raising pens from plotting surface.	
	DOWN	Energizes lift coils lowering pens to plotting surface.	
7	PEN OPERATE - STANDBY - REMOTE sw	Controls input voltage applied to arm and pen servos.	
	STANDBY	Drives pens to control panel end of arms and drives arms to opposite sides of plotting surface.	
	OPERATE	Normal data voltages are applied to servos.	
	REMOTE	Switches standby/operated control lines to a remote control tie-in.	
8	115V, 60 CPS FUSES	Protection of 115-volt 60-cps power source; glows if fuse open.	
9	POWER ON lt	Indicates power is applied to recorder.	
10	115V, 400 CPS FUSES	Protection of 115-volt 400-cps power source; glows if fuse open.	
11	PEN INTERCHANGE sw	Controls interchange of data supplied to pen and arm servos.	
12	POWER sw	Controls application of primary power to plotter circuits.	
13	LIGHTS sw		
	ON	Supplies primary power to backlighting lamps.	
	OFF	Removes power to backlighting lamps.	

Table 1-78. X-Y Variplotter (30 X 30) (Cont)

Key	Nomenclature	Function	Remarks
14	VACUUM sw		
	ON	Supplies primary power to vacuum pump motor.	
	OFF	Removes power to vacuum pump motor.	
15	PARALLAX CONTROLS PENS 1 and 2 ARMS 1 and 2	Ten-turn potentiometers providing control of initial position of pens and arms.	
16	PAPER ADJUST potentiometers	Provide adjustment of reference voltages in each servo.	
17	SCALE FACTOR SWITCH PEN 1 and ARM 1	Rotary selector sw (8-position) providing control of plotter scale factor in each channel.	
18	SCALE FACTOR SWITCH PEN 2 and ARM 2	Rotary selector (8-position) providing control of plotter scale factor in each channel.	

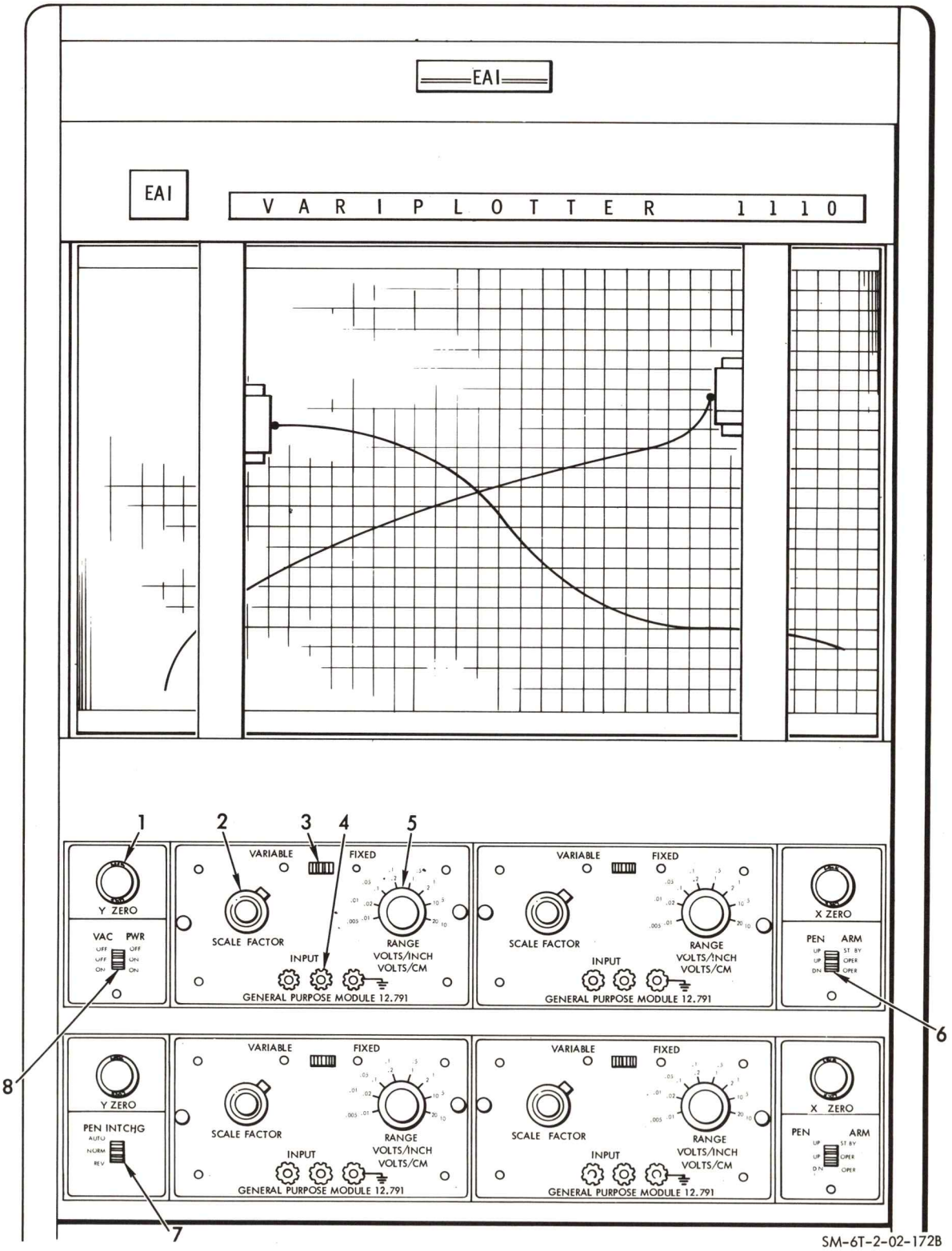

Figure 1-106. X-Y Variplotter (11 x 17)

Table 1-79. X-Y Variplotter (11 X 17)

Key	Nomenclature	Function	Remarks
1	ZERO potentiometers	Permits setting location of X = 0, Y = 0 (0, 0 point) anywhere within a 30 x 45-inch area centered about plotting surface.	
2	SCALE FACTOR control	Enables attenuation of variable scale for plotted parameter.	
3	VARIABLE - FIXED sw	Provides variable or fixed selection of scale factor control.	
4	External INPUT plugs	Provides input connection and either chassis or floating ground.	
5	RANGE control	Enables setting of plot range in either volts/cm or volts/inch. The plug-in module must be removed for access to sw for scale change.	
6	PEN ARM sw		
	UP-STBY	Lifts pen from plotting surface and positions it to center of arm. Arm is positioned to extreme side of travel.	
	UP-OPER	Lifts pen from plotting surface and moves carriage in response to input signals. Arm moves in response to input signals.	
	ON-OPER	Positions pen on plotting surface. Pen carriage and arm move in response to input signals.	
7	PEN INTCHG sw		
	AUTO	Enables automatic interchange of pen and arm functions in event of an arm interception.	
	NORMAL	Disables pen-arm interchange function.	
	REV	Interchanges data inputs and parallax networks regardless of position of arms.	
8	VAC PWR sw		
	OFF-OFF	Primary power is removed from all plotter and vacuum systems.	
	OFF-ON	Plotter circuitry is energized but vacuum systems remain off.	
	ON-ON	Primary power is applied to both vacuum and plotter systems.	

1.6.3 AUDIO TAPE RECORDER.

The tape recorder is an unmodified four-channel KRS Data-Stact DR-2 unit. It will record the earphone output, including sidetone, of each astronaut on a separate channel. The fourth channel may be used to record the instructor conference loop. Playback of the tapes will be accomplished on a portable playback unit stored in the IOS area. Being portable, the playback and astronaut performance evaluation may be accomplished in other areas as long as 115-volt 60-cps power is available. This allows simultaneous recording of one training session while the tape from a preceding session is being evaluated.

The stacked tape automatic cartridge transport (STACT) recorder system (Figure 1-107) contains six magnetic tape cartridges of 1200-foot 1-mil mylar tape. Each tape provides 2.2 hours continuous recording time, or much more when using the VOX circuitry. Tape cartridges are changed automatically so that when the first cartridge becomes fully recorded, the second cartridge begins recording. This cycle continues through the sixth tape, at which time a last cartridge indication is provided on panel 87. Sequencing of tape cartridges results in at least 13 hours recording time (for a continuous record) without destroying previously recorded information. As the cartridges are manually replaced after they are recorded, unlimited recording time becomes available. When the record command is given by VOX or continuous record command, the capstan will reach full speed of 1-7/8 inches per second in 40 milliseconds. IOS controls are provided for all voice recorder functions. These controls are described in table 1-80. The playback unit is stored under the IOS console containing the recorder. Electrical connections for the playback unit are provided adjacent to the recorder. (See figure 1-107.)

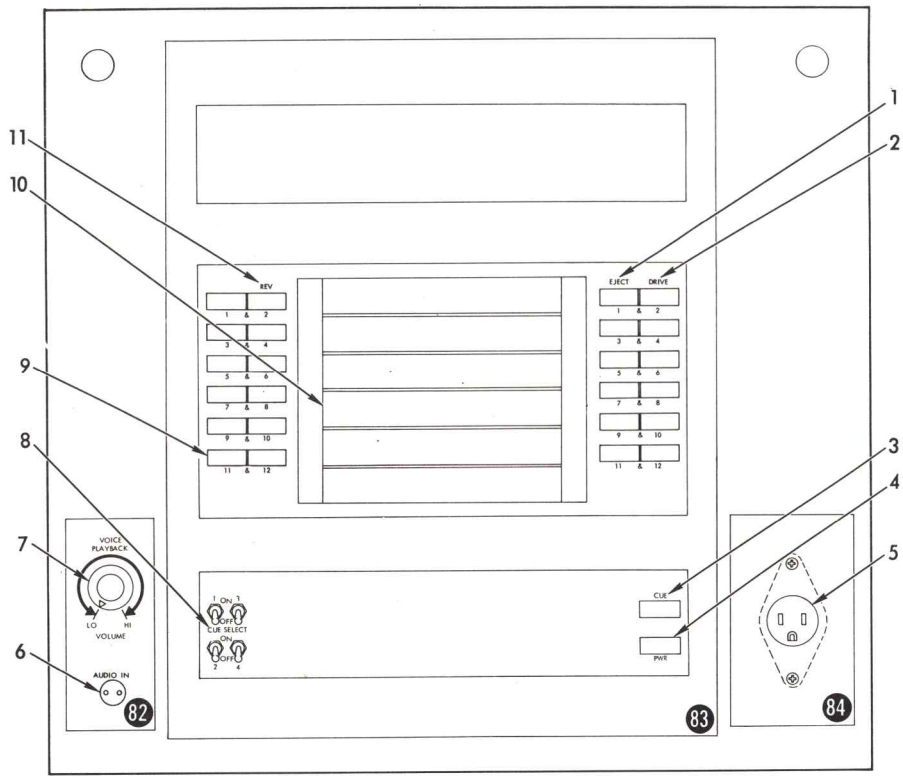

SM-6T-2-02-112B

Figure 1-107. KRS Audio Tape Recorder Panel

Table 1-80. KRS Audio Tape Recorder Panel

Key	Nomenclature	Function	Remarks
1	EJECT P/B	Ejects tape cartridge from front loading guide rails.	
2	DRIVE P/B	Provides tape forward drive signal on selected cartridge.	
3	CUE tone master sw	Activates a 1-kc tone used for identification of starting points.	
4	PWR sw	Provides power on/off control.	
5	Electrical plug	Provides 115-volt 60-cps power connection for audio playback.	
6	AUDIO IN jack plug	Connection to volume control for audio playback unit.	
7	VOICE PLAYBACK control	Provides volume control for audio playback unit.	
8	CUE SELECT sw	Records a short cue tone on selected channel for identification purposes.	
9	Stop P/B	Stops operation of selected channel.	
10	Tape cartridge	Provides canister of magnetic recording tape	
11	REV P/B	Provides tape reverse drive signal on selected cartridge.	

1.7 SIMULATOR CONTROL PROGRAMS.

The AMS computer programs are divided into two gross functional groups, operational and diagnostic. The operational programs are those used to accomplish simulation of Apollo spacecraft systems and mission dynamics and to provide simulator control during on-line simulations. There are five types of operational programs: (1) vehicle dynamics, (2) vehicle systems, (3) simulator effects, (4) interface (MSCC), and (5) simulator control. Simulator control programs are closely related to the computer description in this section of the handbook and are discussed here for that reason. Vehicle dynamics, vehicle systems, simulator effects, and interface programs are directly related to the system and mission simulation and are discussed with respect to such simulation in section 2 of this volume.

The diagnostic programs are used to determine status and conditions of the simulator, to test AMS equipment for proper operation, and to isolate simulator equipment failures. The diagnostic programs are off-line routines used for test, checkout, and maintenance purposes only and are not the subject of this handbook.

1.7.1 EXECUTIVE AND CONTROL SYSTEM.

Overall control of the AMS computer operation during both on-line operation and off-line functions is accomplished by a group of interrelated computer programs identified as the executive and control system. The programs included in the group are as follows:

- Supervisory control
- Interrupt and timing control
- Input/output control
- On-line data recording
- Step-ahead
- Simulator master control

The following are other programs which interface with the executive and control system for purposes of accomplishing simulator control:

- Real-time input/output
- Malfunction insertion unit
- Recorder and plotters
- Data retrieval
- Utilities

The various control and synchronizing functions of the executive and control system are listed as follows:

- Scheduling and sequencing all operational programs

- Performing timing functions for programs within executive and control systems

- Monitoring and otherwise managing interface between various programs of which the executive and control system is comprised
- Continuously monitoring for and responding to program interrupt commands
- Reading and accomplishing switching required for selected mode(s) of simulator operation (core memory allocation, programs, routines, subroutines, etc.)
- Monitoring stored simulation data in the three computers as required for computations
- Monitoring and managing interface between executive and control system and other AMS programs

1.7.1.1 Supervisory Control Program.

The supervisory control program determines which programs are operating in the AMS computers at any given time. Factors measured and responded to in accomplishing such control are the AMS mode of operation, the mission phase being simulated, normal routines for mode phase, and priority inputs or overrides to the normal routines. Two major routines make up the supervisory control program, the scheduler routine and the phaser routine.

The scheduler routine initiates each of the programs required for the simulation in their appropriate sequences for the AMS mode phase. As each commanded program is completed, control is returned to the scheduler routine for initiation of the next program in the schedule.

The phaser routine measures and evaluates the progress of the simulation at each iteration in which there has been no change in mission phase. The supervisory control program is permitted to reiterate in the same calling sequence. Where the phaser routine detects a change in mission phase, the phaser revises the supervisory control program to a calling sequence appropriate for the phase into which the simulation is entering. The next iteration of supervisory control program will then occur in accordance with the new (revised) calling sequence.

1.7.1.2 Interrupt and Timing Control Program.

The interrupt and timing control program consists of two routines, the power failure interrupt routine and the real-time interrupt and timing routine. The two routines result in four types of program interrupts: (1) power failure interrupt, (2) real-time interrupt, (3) all fully buffered channels free interrupt, and (4) fully buffered channel free interrupt.

The purpose of the power failure interrupt is to accomplish immediate storage of all program data as a function of impending power failure so that such failure does not result in a requirement to reprogram completely when power is restored. The power failure interrupt routine is initiated in the event of an out-of-tolerance condition of the primary a-c input power. The routine

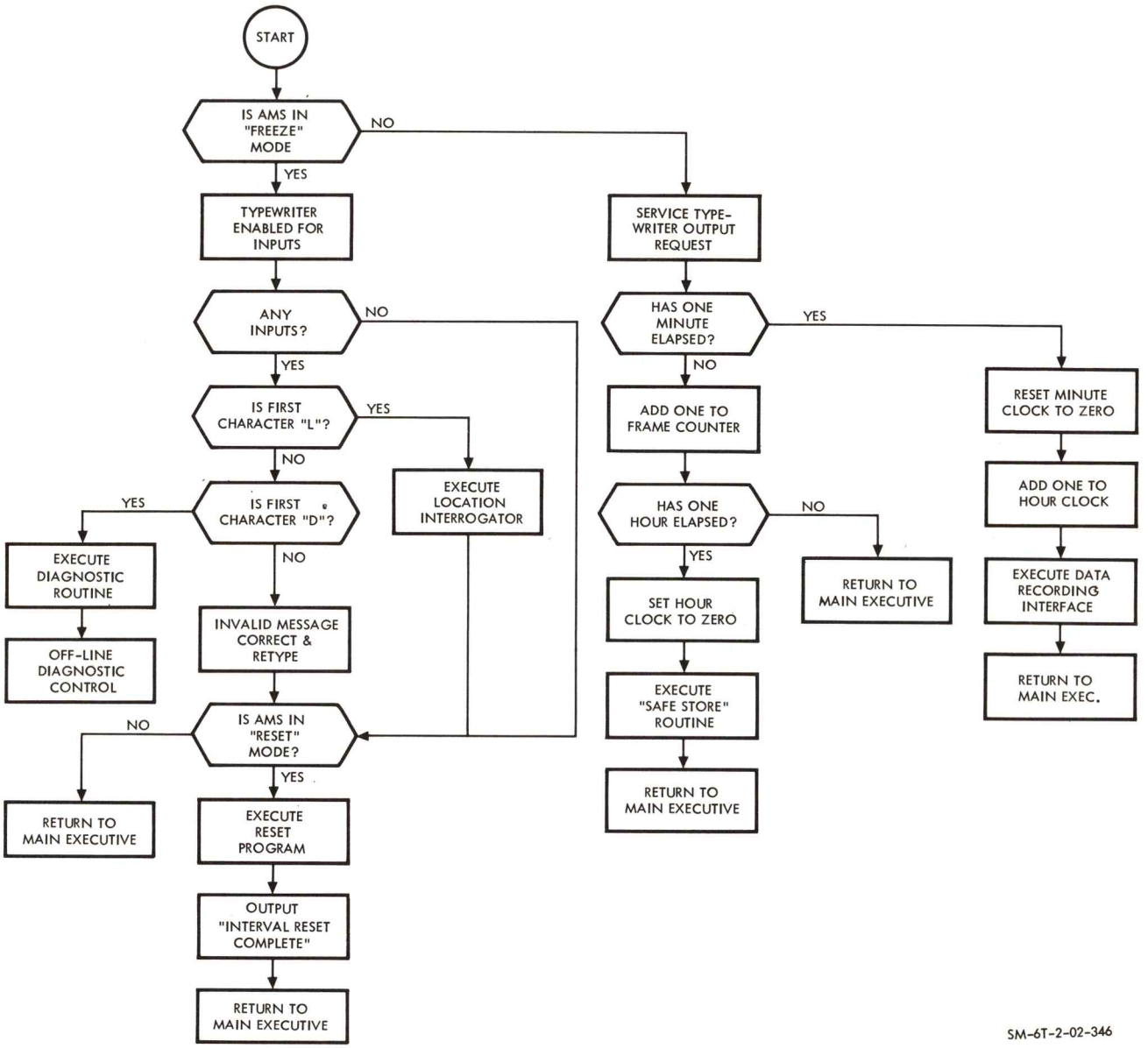

Figure 1-108. Input/Output Control Program

stores the data in the computation registers, the status of the channel enable flip-flops, and the contents of the program register at the time the interrupt is initiated. Recovery from the power failure will cause the simulator to go into freeze mode. The instructor-operator then has the option of a run or reset mode.

The real-time interrupt and timing routine synchronizes the central timing system, the supervisory control program, and the various real-time functions of the simulation in process. The routine responds to the 50-millisecond interrupt from the central timing equipment. If the simulator is not in the run mode, the routine stores the data in the computation registers and control is returned to the supervisory control program. If the simulator is in the run mode, the entire real-time simulation situation is updated by 50 milliseconds. When the routine is complete, the scheduler routine is reinitiated unless the most recent 50-millisecond interrupt has resulted in a requirement for a change in phase. If the latter is true, the phaser routine is initiated and is followed by the initial iteration of the revised calling sequence.

The two interrupt routines relating to fully buffered channel availability are for the purpose of maintaining supervisory control program cognizance of channels available for input/output switching.

1.7.1.3 Input/Output Control Program.

The input/output control program is provided for two purposes: to manage the computer-to-peripheral equipment interface in the freeze mode and to synchronize digital recording with real time (minute and hour quantities) when the AMS is in any mode other than freeze. The input/output control program is not to be confused with the real-time input/output control program discussed in paragraph 1.7.2. The real-time program manages the computer-to-peripheral equipment interface in all modes other than freeze. The program logic is illustrated in figure 1-108.

When the input/output control program is initiated by the supervisory control program, a check is made to determine whether the run or freeze mode is in operation. If in the run mode, any error messages or operating instructions will be read out to the typewriter. Next, the frame counter, which is incremented every 50 milliseconds, is checked to see if 1 minute has elapsed. If not, the program returns to the main executive program. During the frame following the minute interval, control is transferred to the data recording program, which records specified parameters on tape. A third check is made to determine if 1 hour has elapsed. If so, control is transferred to the safe store routine, which automatically stores selected parameters to be used for resetting.

If the first check determines the simulator to be in the freeze mode, the typewriter is enabled for inputs to the computer. The L and D are ~~the only~~ valid characters that, when typed in, will initiate other routines. When L is typed in, the on-line typewriter core memory interrogation routine is called up to accept the rest of the message which requests transfer of information to or from the memory as specified. If D is typed in, control is transferred to the off-line maintenance and diagnostic interface control program.

Reset can be requested during the freeze mode. In the reset routine, all parameters are reset; upon completion, the message "interval reset complete" will be typed out and control returned to the supervisory control program.

1.7.1.4 On-Line Data Recording Program.

The function of the on-line data recording program is to record 144 selected variables and Boolean quantities every minute. The data included in this basic 144, along with other operational data, is the subject of section 6 (Simulation Output Data) of Volume II of this handbook.

When the simulator is in the run mode, the 144 selected parameters are sampled once every 1200 iteration pulses (50-millisecond rate) in the manner explained in paragraph 1.7.1.3.

1.7.1.5 Step-Ahead Program.

The step-ahead program provides the capability of advancing the SCM along the trajectory at a rate faster than real time. The program is effective in both the nonintegrated and the integrated training mission.

During a nonintegrated mission, the step-ahead program is initiated by the insertion of the desired simulated GMT via the typewriter and the depression of the step-ahead switch-light during the freeze mode. This initiates a series of programs to be called which mechanize the step-ahead function. The central timing program updates all clocks and other quantities as required. Certain parameters from the equation of motion program which are used to calculate orbital drag are called up, and these inputs are used by the aerodynamic forces and moments program to compute the orbital drag. The EOM program is again programed; at which time, the SCM position and velocity of the vehicle is solved. These computations are used by the visual system equations to drive the MEP films, providing the correct visual effects. The G&N programs are then called up to update their trajectory, time, and W matrix. Upon completion of these programs, the step-ahead light is turned off and the simulator is returned to the freeze mode.

During an integrated mission, the procedure is similar to the nonintegrated with the following exception. A nonreal-time input/output program transfers data from the GSSC to the AMS common memory when the MSCC interface program compares the GSSC time to the time updated by the CTE program and finds that the times are the same. From that point on, the step-ahead program functions in the same manner as the nonintegrated mode.

1.7.1.6 Simulator Master Control Program.

The simulator master control program provides the instructor-operator with the capability of controlling simulator operation through the IOS simulator control panel. The extent of control of the AMS is dependent upon the mode of operation. During an integrated mission, the instructor operates the simulator at the verbal direction of the simulation supervisor located in the mission operations control room (MOCR). In the AMS nonintegrated mode, the instructor-operator has complete control of the AMS.

The master control program computes the logic equations that provide the IOS control functions; that is, run, go, freeze, step ahead, hold, reset, recycle, and store at least once each 0.8 second. The following is a brief description of the mechanization of the control functions.

- Run. When the RUN pushbutton is depressed, a command is entered into all three computers. If all computers acknowledge receipt of the command, an output is sent to the READY portion of the split-level READY-RUN indicator. The freeze function is also rendered inactive. Upon receipt of the next 1-minute pulse from the time standard or GSSC, the computer output extinguishes the READY lamp and illuminates the RUN lamp indicating the beginning of real-time simulation.

- Go. The go function is only active during a prelaunch condition. During an integrated mission, the simulation supervisor shall verbally notify the instructor when the mission is to begin. Upon this command, the instructor will depress the GO pushbutton which enters a command into the computer. The computer will put out a signal which illuminates the READY portion of the split-level READY-GO indicator. Upon receipt of the T -60-second discrete from GSSC, the READY lamp shall extinguish, the GO lamp shall illuminate, and the countdown from T -60 seconds commences. During a nonintegrated mission, the same procedure occurs, but the T -60-second discrete originates from the time standard.

- Freeze. The activation of the FREEZE pushbutton causes the computer to extinguish the RUN lamp, illuminate the FREEZE lamp, and real-time simulation ceases at that point. Continuation of the mission will begin upon receipt of the next 1-minute pulse following activation of the RUN pushbutton.

- Hold. The hold function is only active during a prelaunch condition. During an integrated mission, the hold discrete transmitted from the GSSC causes the computer to extinguish the GO lamp, illuminate the HOLD lamp, and stop the TO/FROM LAUNCH timers, but does not stop simulated GMT clocks. The same occurs during a nonintegrated mission if the HOLD pushbutton is depressed. In both cases, reinitialization must be accomplished before the mission can continue.

- Reset. The activation of the RESET pushbutton will put the simulator into the freeze mode and initiate the reset routine of the input/output control program. The reset routine reads any one of 50 sets of variables established for initial condition points into memory location from magnetic tape.

- Recycle. Recycle is only active during prelaunch and is used in conjunction with the hold function. Activation of the RECYCLE pushbutton causes the TO/FROM timers to return to the T -60-second condition in the integrated mode. In the nonintegrated mode, the timers return to T -60 seconds and the launch-boost tape is returned to its start point. Activation of the GO pushbutton removes the recycle and hold functions.

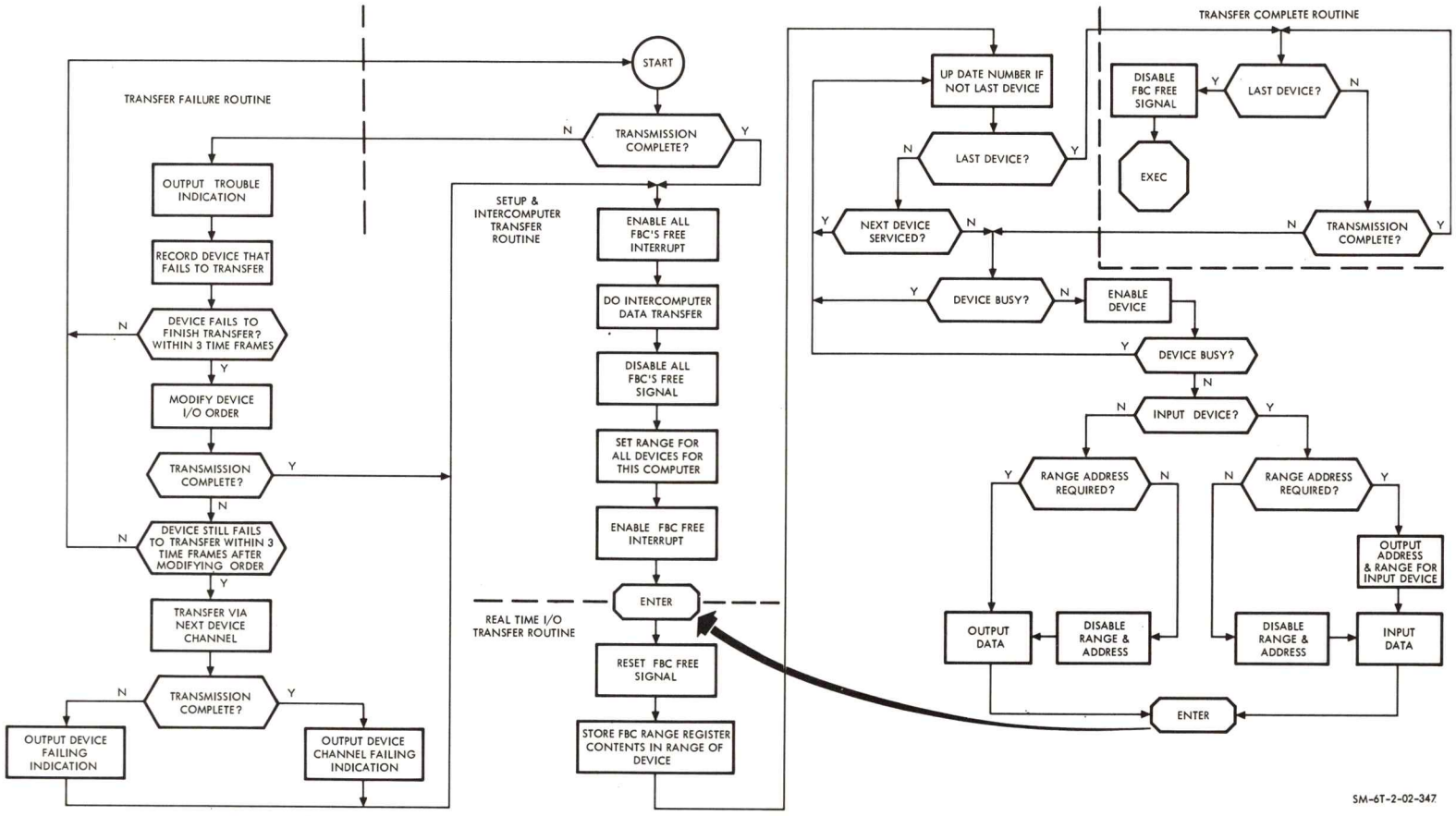

Figure 1-109. Program Real-Time Input/Output Flow Chart

- Step-Ahead. Activation of the STEP-AHEAD pushbutton also initiates the freeze mode in addition to the step-ahead mode. The computer will accept a new time from one of the following inputs: GSSC during an integrated mission, or by typewriter during a nonintegrated mission. The computer will update all programs by this delta time. Continuation of the mission from the new point is accomplished by activating the RUN pushbutton.

- Store. Depressing the STORE pushbutton enters the computer into the store routine without interfering with real-time simulation. The routine will store certain values in memory at the instructor's request. The STORE lamp is illuminated upon depressing the switch and is extinguished as a function of next 1-minute pulse.

1.7.2 REAL-TIME INPUT/OUTPUT PROGRAM.

The purpose of the real-time input/output program is to manage the transfer of data between the computers and the data conversion equipment and also control data transfer between computers. The equipment controlled by the real-time input/output program consists of the input/output control box, a time multiplex unit, fully buffered channels, an access distribution unit, and the intercomputer communication unit. The input/output control box interfaces the data conversion equipment and the computing system. The time multiplex unit acts as a switching device between the control box and the intercomputer communication unit. The access distribution unit provides the access to the common memory. The intercomputer communication unit provides the means for intercomputer transfer. Two fully buffered channels are used: one links the system E computer with the control box and the ICCO; the other connects the TMU with the ADU in order to gain access to the common memory. (See figure 1-86.)

The real-time input/output program is placed in only two computers because of the common memory configuration with the order, range, and address of the device varying in each computer. The program is accomplished at an iteration rate of 20 times per second. Accomplishing the transfer of data from a specific item of data conversion equipment is called "servicing the device".

The real-time input/output program consists of the following four routines:

- Setup routine and intercomputer data transfer
- Real-time input/output transfer
- Transmission complete
- Transfer failure

Figure 1-109 is a flow diagram of the real-time input/output program showing the routines and their relationship to each other. Inputs from the ground support simulation computer (GSSC) in the mission control center are provided to the AMS through a computer-to-computer buffer system when the

simulator is in the integrated mode of operation. The input/output passed across the AMS-to-GSSC interface in the integrated mode are at the same 20 times per second as for the nonintegrated mode.

NOTE

Range is defined as the number of data items to be transferred to a given device. Range data is used by the input/output program to determine that transfer to one device is complete and initiate advance to the next device.

1.7.2.1 Setup and Intercomputer Data Transfer Routines.

The purpose of the setup and intercomputer data transfer routines is to perform the initial preparations for an iteration of the real-time input/output program and to accomplish the initial transfer functions (intercomputer) within that iteration.

The start in figure 1-108 is representative of any 50-millisecond iteration pulse from the central timing equipment. Prior to initiating a new iteration, the program checks to see that all of the transfers (or transmissions) of the previous iteration have been completed. If the previous transmission has not been completed the transfer failure routine is initiated. If the previous transmission is completed, the all-FBCs-free interrupt is enabled, thereby establishing FBC readiness for a new iteration of data transfer.

When the all-FBCs-free signal is received, two of the computers will accomplish intercomputer data transfer while the third computer updates SCS control inputs. When intercomputer transfer is completed, the all-FBCs-free interrupt is disabled.

When intercomputer data transfer is completed, the setup and intercomputer data transfer routines perform three additional subroutines as a function of all-FBCs-free disable. These subroutines set the ranges for each computer-DCE interface, check sense lines from the MIU and computer-to-computer buffer (integrated mode only), and read and reset the MIU, if set. The FBC-free interrupt is enabled at the completion of this routine, thereby making the FBCs available for the real-time input/output transfer routine.

NOTE

An FBCs-free interrupt is generated within each computer when the computer has completed its data transfer. When all computers register FBCs free, and all-FBCs-free interrupt results.

1.7.2.2 Real-Time Input/Output Transfer Routine.

The real-time input is entered with the FBCs-free interrupt and the program commences immediately to progress through computer-to-DCE channels. The routine is shown between the enter blocks in figure 1-108. The routine

first resets the interrupt signal and delivers FBC range register contents to the device being serviced. The program then tests the device to see if it is the last device to be serviced in the program, has or has not been serviced, or device is busy. When the computer-to-DCE interface is established for the next device in the program, the routine establishes appropriate switching for either input or output, and data transfer is accomplished. When the data to be transferred is entered, the completed enter function initiates the sequence for the next device to be serviced.

1.7.2.3 Transfer Complete Routine.

When a real-time input/output routine responds yes to Last Device?, the transfer-complete routine is initiated. The transfer-complete routine double-checks Last Device? and returns control to the executive program awaiting the next iteration or start if the answer is yes. If the answer is no, the routine queries Transmission Complete? and returns to the channels for which data transfer has not been accomplished.

1.7.2.4 Transfer Failure Routine.

Paragraph 1.7.2.1 explains that the first step in the setup and intercomputer transfer routine is to test Transmission Complete? and a yes is required to proceed with that routine. If no is the response to the test, the transfer failure routine is initiated. The logic of the routine is included in figure 1-108.

The transfer failure routine will record the device that has not completed transfer. If, after three time frames have elapsed, data transfer still has not been completed, the order of servicing the device will be modified and three more attempts will be made to transfer via the channel. If this is unsuccessful, data transfer via the next channel will be attempted. If the next channel also fails to transfer, an output device failing signal is generated. If the next channel succeeds in transferring the data, a channel failing (the previous one) signal is generated.

1.7.3 MIU PROGRAM.

The controls and displays of the malfunction insertion unit (MIU) are described at length in section 1 of Volume I of this handbook. Instructions for operating the MIU are provided in section 1 of Volume II. The MIU program is the computer software required to use the MIU for loading simulated malfunctions into the computers, enabling MIU control and displays, entering and clearing malfunctions, and processing inputs and outputs to the MIU system. The MIU program is the same for all three computers. The program involves three routines as follows:

- Initialization routine
- Main routine
- Master clear routine

1.7.3.1 Initialization Routine.

The initialization routine is used to clear the MIU display panels, enable the MIU controls, establish initial values for the MIU program, and insert preprogramed and/or time-dependent malfunctions prior to on-line simulation. During the operation of the routine, the computer connected to the card reader and line printer is considered the master computer. The master will read in the desired malfunctions, transfer the necessary data to the other computers, and record the status of the malfunctions on the line printer.

Prior to reading in the selected malfunctions, the initialization routine established initial conditions by clearing all malfunctions and resetting the time-dependent counters to zero. Cards for the desired time-dependent and preprogramed malfunctions are then read into the master computer. The master computer examines the system code of each malfunction to determine its validity. If the system code is not valid, the malfunction is rejected, and a message is typed out on the line printer indicating an invalid condition. If the system code is proper, a check is made to determine whether the master computer does contain the simulated system for which the malfunction is applicable. If not, the malfunction is transferred to the slave computer. If so, the malfunction code number is checked for validity. If valid and not a time-dependent malfunction, the malfunction is then entered into the computer and a readout is made on the line printer.

If the malfunction is time dependent, two checks are made before the malfunction is either entered or rejected. Only 15 time-dependent malfunctions can be entered into each computer, and these must be spaced no less than 91 seconds apart. If a validity check of these conditions is passed, the malfunction and its time of activation (time from launch) is stored in memory as a time-dependent malfunction, and a readout is provided on the line printer.

When the master computer does not contain the system for which a malfunction has been inserted, the malfunction is transferred to the slave computer. The malfunction undergoes the same checks in the slave computer as described in the master before being entered or rejected. This routine is completed when all the cards in the card reader have been processed.

1.7.3.2 Main Routine.

The MIU main routine is operational throughout the simulator run. The main routine activates each time-dependent malfunction at the proper time and enters and/or clears malfunctions through the MIU control panels on the IOS.

Entry into the main routine is made in response to a sense line being set when an input word from the MIU is ready. The operation of the routine is predicated upon three different situations as follows:

- Whether a time-dependent malfunction is being displayed (less than 90 seconds to entry)

- Whether it is time to display a time-dependent malfunction (90 seconds before entry)

- If a malfunction is being inserted from the MIU control panel

If, upon entry into the routine, a time-dependent malfunction is being displayed (impending), a check is made to determine whether the instructor has attempted to clear the malfunction. If not, a time-to-activate counter is decremented each iteration until the counter equals zero, at which time the malfunction is entered into the system. If the instructor has cleared the malfunction, the time-to-activate counter is reset to zero and control returned to the executive program.

The second situation occurs when no time-dependent malfunction is being displayed, but the time for such a malfunction is impending. The time for each time-dependent malfunction to be displayed is stored in the computer. The routine checks the stored time-dependent malfunctions; and if the time has arrived to display the malfunction, an impending code is generated, and the time-to-activate counter is set at T -90 seconds. The routine then returns to the executive program, and the next entry into the main MIU routine will follow the course described in the first situation.

If neither of the two aforementioned situations exists, the MIU routine checks the malfunction word inserted from the MIU control panel. This malfunction is given a validity check. If the validity check is passed, the computer to which the malfunction applies is located and a code number validity check is made. Upon acceptance, the malfunction address is stored; this also checks whether the malfunction has been entered previously. If so, an entered code is generated; if not, the malfunction becomes active, and the routine returns to the executive program.

1.7.3.3 MIU Master Clear Routine.

The master clear routine is entered once each 50 milliseconds when the master clear sense line is set by depressing the MASTER CLEAR ALL SYSTEM switch. The master clear routine is comprised of five subroutines which will clear all tables, clear all malfunctions, set the time-to-activate counter to zero, and present a visual indication on the display panel.

1.7.4 PLOTTERS AND RECORDERS PROGRAM.

The function of the plotters and recorders program is to provide a completely flexible capability to record any simulation parameter from pen recorder transcription on the X - T and/or X - Y recorders. Section 6 of Volume II of this handbook includes all the parameters and their program symbols which can be recorded. Detailed operating procedures for implementing this program are found in section 1 of Volume II.

The plotters and recorders program operates in two parts. The first provides the input to the computer for the selection of the parameter, its

location and scale factor, and the particular recorder and channel on which it is to be recorded. This information is entered through the IOS typewriter during the freeze mode of operation or during a premission setup.

The second part of the program is the outputting of the parameter to the selected recorder or plotter during the simulated mission. This is accomplished by extracting the parameter from its assigned location, scaling and conditioning the parameters, if necessary, and storing it in the output storage location for transmission to the recorder.

The recorder program operates at an iteration rate of 20 times per second, regardless of whether any parameter has been selected for recording or not. If no parameters have been selected for recording, the program returns immediately to the executive program without further execution of the recorder program.

1.7.5 UTILITY SYSTEMS.

The utility systems provide the operating aids, debugging aids, processors, utility programs, and library programs for the computer complex. In addition, support, maintenance, and development tasks are also controlled by the utility system.

1.7.6 LIBRARY OF PROGRAMS.

The following tables constitute the operational and maintenance programs developed for the use of the AMS.

Table 1-81. Simulator Control Programs

Program No.	Program Name
28	Executive and control system
28A	Supervisory control
28B	Interrupt and timing control
28C	Input/output control
28D	On-line data recording
28F	Step ahead
28G	Simulator master control
30	Real-time input/output
30A	DCE input/output
30B	AMS computer-to-computer transfer
31	Malfunction insertion unit
31A	Initialization routine
31B	Keyboard simulator
31C	Main routine and master clear routine
32	Preoperational and control system
34	Plotters (X-Y); recorders (X-T)
35	Utilities
38	Data retrieval
40	Data pool

Table 1-82. Diagnostic Programs

Program No.	Program Name
37	Digital readout
50	Central computer
51	Tape control units and transports
52	Core memory
53	Card punch-card reader control
54	Line printer
55	Computer console
55A	Displays and switches
55B	Typewriter
55C	Paper tape punch
55D	Paper tape reader
61	Visual systems
61A	Rendezvous servo
61B	Starfield
61C	Sextant and telescope
61D	Rendezvous video
61E	Mission effect projector
66	Data conversion equipment and real-time control box
71	Trajectory link verification
72	Control and verification
72A	Controls and displays verify - supervisory
72B	Controls and displays verify - timing control
72C	Controls and displays verify - I/O control
72D	Controls and displays verify - DCE controls and displays

Table 1-83. Interface-MSCC Programs

Program No.	Program Name
6	Launch-boost nonintegrated
21	Communications and instrumentation
21A	Antenna effects
21B	Power and switching logic
21C	Central timing
21D	Antenna effects station location
22	S-IVB control and propulsion system
23	IMCC interface (integrated)
24	Up-data link
25	Telemetry system

Table 1-84. Vehicle Dynamics Programs

Program No.	Program Name
1	Equations of motion
2	Aerodynamic forces and moments
3	Weight and balance
4	Ephemeris data

Table 1-85. Simulator Effects Programs

Program No.	Program Name
13	Smoke
26	Aural
27	Visual
27A	Sextant starfield image generator drive signals
27B	Telescope drive signals
27C	Rendezvous image
27D	Starfield globe drive signals
27E	Mission effects projector
27F	Occulation mask
27G	Sun simulator (sun image projector)

Table 1-86. Vehicle Systems Programs

Program No.	Program Name
7	Propulsion systems
7A	C/M reaction control system
7B	S/M reaction control system
7C	Service propulsion system (thermodynamics)
7D	Propellant utilization system
8	Supplementary displays
8A	Data output
8B	Visual
8C	True position and latitude
9	Electrical power system
9A	Logic
9B	Displays
9C	Bus equations
10	Fuel cells
11	Space radiators
12	Sequence control group-emergency detection system
16	Caution and warning system
17	Environmental control system
17A	Water

Table 1-86. Vehicle Systems Programs (Cont)

Program No.	Program Name
17B	Water-glycol
17C	Suit and cabin
17D	Oxygen
18	Stabilization and control system
18A	AGCU, FDAI, BMAG
18B	Power and mode logic
18C	Thrust vector control
18D	Attitude control
19	Cryogenic storage system
19A	Oxygen
19B	Hydrogen
20	Guidance and navigation
20A	IMU
20B	IMU temperature
20C	Error warning
20D	IMU-CDU
20E	IMU-CDU difference
20F	Mode select logic
20G	Optics CDU drive
20H	AGC up-data link
20I	AGC executive
20J	AGC input/output
20K	AGC prelaunch
20L	AGC boost monitor
20M	AGC coast
20N	AGC prethrusting
20O	AGC thrusting
20P	AGC in-flight alignment
20Q	AGC entry
20R	AGC CSM abort
20S	AGC subroutines

SECTION 2

SIMULATOR SYSTEM

2.1 PURPOSE AND SCOPE.

This section of the instructor handbook is provided to familiarize the instructor-operator with the extent and manner of simulation of spacecraft systems in the AMS. Such understanding is required for three purposes:

- To provide the instructor-operator with enough simulation mechanization data to effectively interface with computer oriented simulator design and maintenance personnel
- To effectively use simulated malfunctions and telemetry data in accordance with the syllabus outlined in section 3 (AMS Utilization) of this volume and training sessions described in section 2 (Session Data) of Volume II.
- To plan simulation/training runs above and beyond those outlined in the syllabus.

Simulation of all aspects of spacecraft dynamics and the simulation of each spacecraft system represented in the AMS are described in this section. Data provided includes the following:

- Illustrated discussions of the mechanization and computer programs for the various dynamics and visual systems of the AMS
- A spacecraft system flow diagram illustrating each system being simulated and depicting the simulated malfunctions, controls and displays, and telemetry instrumentation points
- Illustrated discussions of the mechanization and computer programs for each spacecraft system being simulated in the AMS.

Additional information describing certain aspects of space flight and spacecraft simulation are included in Volume II of this handbook. A table of simulated spacecraft malfunctions for each system is included as section 5 (Malfunction Data) of Volume II. The table includes the identifying number of each malfunction, title, description, and crew response information. A table of simulation output information is provided as section 6 (Simulation Output Data) of Volume II. The table is used to select output parameters to be assigned to pen recorders, TM fault channels, on-line digital devices, etc. The table defines each parameter, provides correlated computer address and switching data, and includes data for use in pen recorder scaling.

2.2 SYSTEMS CONFIGURATION SUMMARY.

The specific configuration of spacecraft systems simulated by the SE 012 modification to the AMS are fixed as a function of the design data freeze established at the Preliminary Design Review (PDR) 22, August 1965. As a function of spacecraft design developments since that date, certain differences exist between the AMS and the operational spacecraft. Since the Apollo Operations Handbook (SM2A-03) was not constrained by the PDR freeze, spacecraft configuration defined therein has also progressed with spacecraft design developments. Differences in controls and displays configuration for S/C 012 (as of 15 January 1966), the Apollo Operations Handbook (15 October 1965 revision), and the Apollo Mission Simulator SE 012 modification (PDR of 22 August 1965) are identified in table 2-1. A more detailed analysis of the difference between the AMS and S/C 012 (as defined in the AOH) can be accomplished by comparing the contents of this volume of the instructor handbook with the current revision to SM2A-03-SC012 (Apollo Operations Handbook).

2.3 SIMULATED SPACECRAFT DYNAMICS.

The vehicle dynamics programs are provided to simulate all dynamic aspects of the Apollo spacecraft and mission. Computations include the equations of motion, aerodynamics coefficients, and weights and balance as a function of GMT elapse. The functional output of the computations include spacecraft geographic and celestial position and attitude. These are manifested in the AMS visual systems and simulated spacecraft instruments. Computation of these characteristics are continually updated from simulated spacecraft thrusting systems inputs (SPS and RCS), elapsed time, and the operation of other spacecraft systems which affect weight and balance of the vehicle.

2.3.1 EQUATIONS OF MOTION.

The equations of motion compute translational movement along, and rotational movement about, the three spacecraft axes and the required conversion between the different inertial reference frames.

2.3.1.1 Simulated Coordinate Systems.

The coordinate systems used in the spacecraft computations and simulated in the AMS are the earth-inertial, earth-oriented spacecraft body and fixed body frames. These systems are briefly described below and are shown in figure 2-1.

The earth-inertial (I_E) frame has its origin at the earth center. The I_E is used as a reference point to identify the position of celestial bodies. The X_{IE}- and Y_{IE}-axes lie in the equatorial plane of the earth with the X_{IE}-axis lying along the vernal equinox. The Z_{IE}-axis is directed through the earth north pole. The inertial system axes are fixed with respect to fixed stars.

Table 2-1. Systems Configuration Summary

Panel Identification				
		Apollo Mission Simulator		
Apollo Operations Handbook-AOH October 15, 1965	Apollo Spacecraft 012 February 15, 1966	Simulated Command Module	Instructor-Operator Station	AOH - SC012 - AMS Comparison
MAIN DISPLAY				
13	1A13	13	18A26	GLYCOL EVAP, BACK PRESS, HEAT-COOL sw (AOH & AMS); GLYCOL EVAP, STEAM PRESS, INCR - DECR sw (SC012).
14	1A14	14	18A24	CHECK FAIL lt (AOH & AMS); KEY RELEASE lt (SC012).
15	1A15	15	18A25	G/M RCS, A&B HELIUM ON-OFF sw (AOH & AMS); C/M-S/M SEP A&B with guards (SC012). C/M RCS, A&B PROPELLANTS sw (AOH & AMS); C/M RCS PRPLNT A&B sw (SC012).
16	1A16	16	18A27	MAIN CHUTE DEPLOY sw (AOH & AMS); MAIN DEPLOY sw (SC012). MODE LES, TWR JETT - SPS MODE sw (AOH & AMS); LES MODE, TWR JETT-SPS MODE A&B sw (SC012). EDS AUTO-OFF sw (AOH & AMS); moved down one row in SC012. C/M-S/M SEP sw (AOH & AMS); deleted in SC012 in favor of two switches on panel 15.
17	1A17	17	18A13	HF ANTENNA sw (AOH & AMS); deleted in SC012.
19	1A19	19	18A30	UP TLM CMD sw (AOH & SC012); switch not in AMS.
20	1A20	20	18A34	VHF ANTENNA sw, UPPER-LOWER-RECOVERY (AOH & AMS); VHF ANTENNA sw RECOVER-UPPER-LOWER (SC012).
24	1A24	24	17A5	MASTER EVENT SQ CONT, PYRO ARM & LOGIC sw, no guard in AOH & AMS; guarded in SC012.
25	1A25	25	17A2	HF ANTENNA DEPLOY A&B sw (AOH & AMS); ANTENNA DEPLOY A&B sw (SC012). POSTLANDING, BEACON LIGHTS sw (AOH & AMS); replaced by MESC LOGIC ARM A&B sw (SC012). FLOODLIGHTS & COUCH ATTEN MNA 7 MNB sw (AOH & AMS); COUCH ATTEN MNA & MNB (SC012).
26	1A26	26	17A7	EDS SEQ LAMP TEST sw (AOH & AMS; POST LDG BEACON LIGHTS sw (SC012). C/M RCS HE DUMP sw (no guard in AOH & AMS); guarded in SC012.

Table 2-1. Systems Configuration Summary (Cont)

Panel Identification				
		Apollo Mission Simulated		
Apollo Operations Handbook-AOH October 16, 1965	Apollo Spacecraft 012 February 15, 1966	Simulated Command Module	Instructor-Operator Station	AOH - SC012 - AMS Comparison
RH EQPT BAY				
3	Battery Vent Control	None	None	DUMP HEATER sw (AOH, but not SC012); panel not simulated in AMS.
4	Electrical Pwr C/B Panel	4	17A2	Variations in nomenclature and C/B locations between AOH, SC012, and AMS.
5	ECS Steam Duct Heaters	None	None	AOH and SC012 agree; panel not simulated in AMS.
6	Inst Pwr Control	None	None	Variations in C/B numbering AOH to SC012; panel not simulated in AMS.
7	Uprighting System	None	None	AOH and SC012 agree; panel not simulated in AMS.
RF FWD EQPT BAY				
1	In-flight Test System	1	15A2	AOH and AMS agree; SC012 has additional RCS HEATERS sw.
LH EQPT BAY				
2	Surge Tank Press Relief Shutoff Valve	None	None	AOH and SC012 agree; panel not simulated in AMS.
3	Girth Frame Shelf Controls	3	None	COMPARTMENT PRESSURE REGULATOR, CLOSE NORMAL - BOOST ENTRY - DUMP (AOH & SC012); CABIN PRESSURE REGULATOR CLOSE - AUTO OPEN (AMS GLYCOL TO RAD valve (AOH & AMS); S/M GLYCOL SHUTOFF valve (SC012).
5	Suit Demand Press Regulator Assy & Temp Contr Evap Override Switch	5	None	AOH and SC012 contain SUIT TEST valve and REGULATOR SELECTOR sw, 1-2-1&2-OFF. AMS contains SUIT PRESS TO TEST sw and REGULATOR SELECTOR switch, 1 REG-BOTH - 2 REG.
8	Oxygen Control Panel	8	None	S/M SUPPLY REGULATOR, 1-OFF-2-1&2 (AOH & AMS); MAIN REGULATOR PRESS TO ROTATE, 1-OFF-2-NORMAL (SC012). TANK PRESSURE REGULATOR, SELECTOR INLET, and SELECTOR OUTLET, both OFF-1-1&2-2 (AOH & AMS). WATER TANKS PRESSURE REGULATOR SELECTOR INLET AND RELIEF, GLYCOL TANKS PRESSURE REGULATOR SELECTOR INLET AND RELIEF, WATER TANKS PRESSURE REGULATOR SELECTOR OUTLET, GLYCOL TANKS PRESSURE REGULATOR SELECTOR OUTLET all OFF-1-NORMAL-2 (SC012). PLSS FILL, CAUTION (AOH & AMS); PLSS FILL, CAUTION 900 PSI - CLOSE VALVE BEFORE REMOVING CAP (SC012).

Table 2-1. Systems Configuration Summary (Cont)

Panel Identification				
		Apollo Mission Simulator		
Apollo Operations Handbook-AOH October 15, 1965	Apollo Spacecraft 012 February 15, 1966	Simulated Command Module	Instructor-Operator Station	AOH - SC012 - AMS Comparison
				EMERGENCY INFLOW REGULATOR (AOH & AMS); EMERGENCY CABIN PRESSURE (SC012). CABIN PRESSURE REGULATOR (AOH & AMS); CABIN DEPRESS (SC012).
9	Water Control Panel	9	None	WASTE WATER SERVICING, ON-OFF (AOH & AMS); WASTE WATER SERVICING, OPEN-CLOSE (SC012). WASTE TANK SERVICING SHUTOFF label (AOH & AMS); label deleted in SC012. OVERBOARD PRESSURE RELIEF, OFF-ON-AUTO (AOH & AMS); PRESSURE RELIEF OFF-1-BOTH-2 (SC012). POTABLE TANK SHUTOFF, ON-OFF (AOH & AMS); POTABLE TANK INLET, OPEN-CLOSE (SC012). WASTE WATER S/M SUPPLY SHUTOFF, ON-OFF (AOH & AMS); WASTE TANK INLET, OPEN-CLOSE (SC012).
10	Coolant Control Panel	10	None	SUIT EVAP GLYCOL ON-OFF (AOH & AMS); SUIT EVAP GLYCOL, PUSH TO ENGAGE (SC012).
LOWER EQPT BAY				
3	Map & Data Viewer Pnl	3	16A2	Warning lights on AOH and AMS panels have been changed; moved to a new panel and rearranged in SC012.
5	Optics Control Panel	5	16A12	ASTRO SEXTANT DOORS INDICATOR & DRIVE added to SC012; not in AOH or AMS. OPTICS TRACK light (AMS); not labeled in AOH or SC012.
9	Pyro Battery Panel	9	17A8	PYRO B, HF ANT DEPLOY C/B (AOH & AMS); deleted in SC012. BAT C PWR POSTLANDING & ENTRY, BAT B PWR ENTRY & BAT A PWR ENTRY (AMS); BAT C PWR, BAT B PWR, & BAT A PWR (AOH & SC012).
10	Gas Chromotograph	None	None	AMPL CAL (AOH); lowered in SC012. Panel not simulated in AMS.

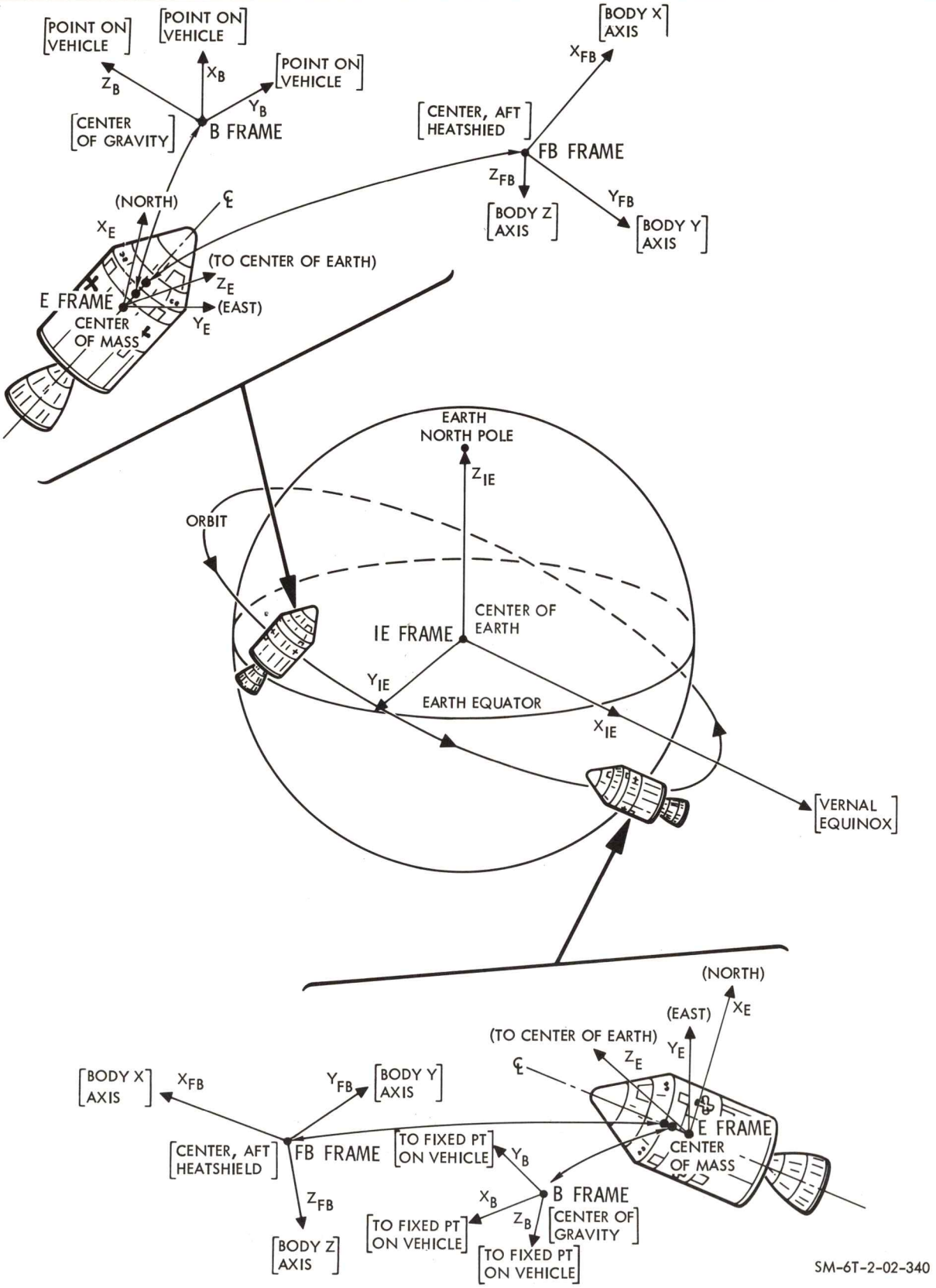

Figure 2-1. Simulated Coordinate Systems

The earth-oriented (E) frame is not an inertial system. The E frame is used for the spacecraft coordinate system in local vertical mode. Its origin is the center of mass of the spacecraft. The X_E axis is directed toward the earth's magnetic north and will change its direction with changes in latitude of the spacecraft, the Y_E axis is directed toward the earth's east and will also change its direction as the spacecraft orbits the earth. Both the X_E and Y_E axes are perpendicular to an extension of the earth's radius and lie in a plane which is parallel to the earth's surface directly below the spacecraft. The E-frame is shown twice in figure 2-1 to illustrate the changes occurring in the X_E, Y_E, and Z_E axis directions as the vehicle moves about the earth.

The point of origin of the spacecraft body frame (B frame) is the spacecraft's center of gravity. The X_B, Y_B, and Z_B axes may be aligned to arbitrary points on the vehicle forming a 90-degree triad and will change direction as the spacecraft attitude changes. This noninertial system is used as a reference to determine spacecraft attitude and attitude errors with respect to the inertial reference systems.

The fixed body (FB) frame also is a noninertial system. The point of origin of this reference system is the physical center of the command module aft heat shield. The X_{FB}, Y_{FB}, and Z_{FB} axes correspond to the X, Y, and Z spacecraft body axes. Therefore, the directions of the axes will change with the vehicle attitude changes just as the B-frame axes do. This is illustrated by the two FB frames shown in figure 2-1.

2.3.1.2 EOM Program Interface.

A block diagram of the interface between the equations of motion and other programs within the AMS computer is shown in figure 2-2. To compute simulated spacecraft attitude, position, and velocity vectors, the equations consider the effect of RCS, SPS, S-IVB, LES, and launch boost thrust inputs on the simulated spacecraft mass, inertia, and center of gravity.

Several output factors from the equations of motion (EOM) are fed back into the programs providing inputs to the EOM to continuously update the solution on the basis of continued thrusting. The factors routed back to inputting programs are altitude, vehicle velocity (body axis), and relative velocity to the aerodynamic forces and moments program, and altitude to the sequential events control system program. The functions of these interfaces are as follows:

- The sequential events control system program uses simulated S/C altitude to determine abort mode and event initiation.

- Aerodynamic forces and moments program receive body axis vehicle velocity along with atmospheric (relative) velocity and altitude. These terms are used to compute atmospheric effect on vehicle attitude simulation. The resultant terms are then sent to the EOM in the form of aerodynamic force and moment vectors.

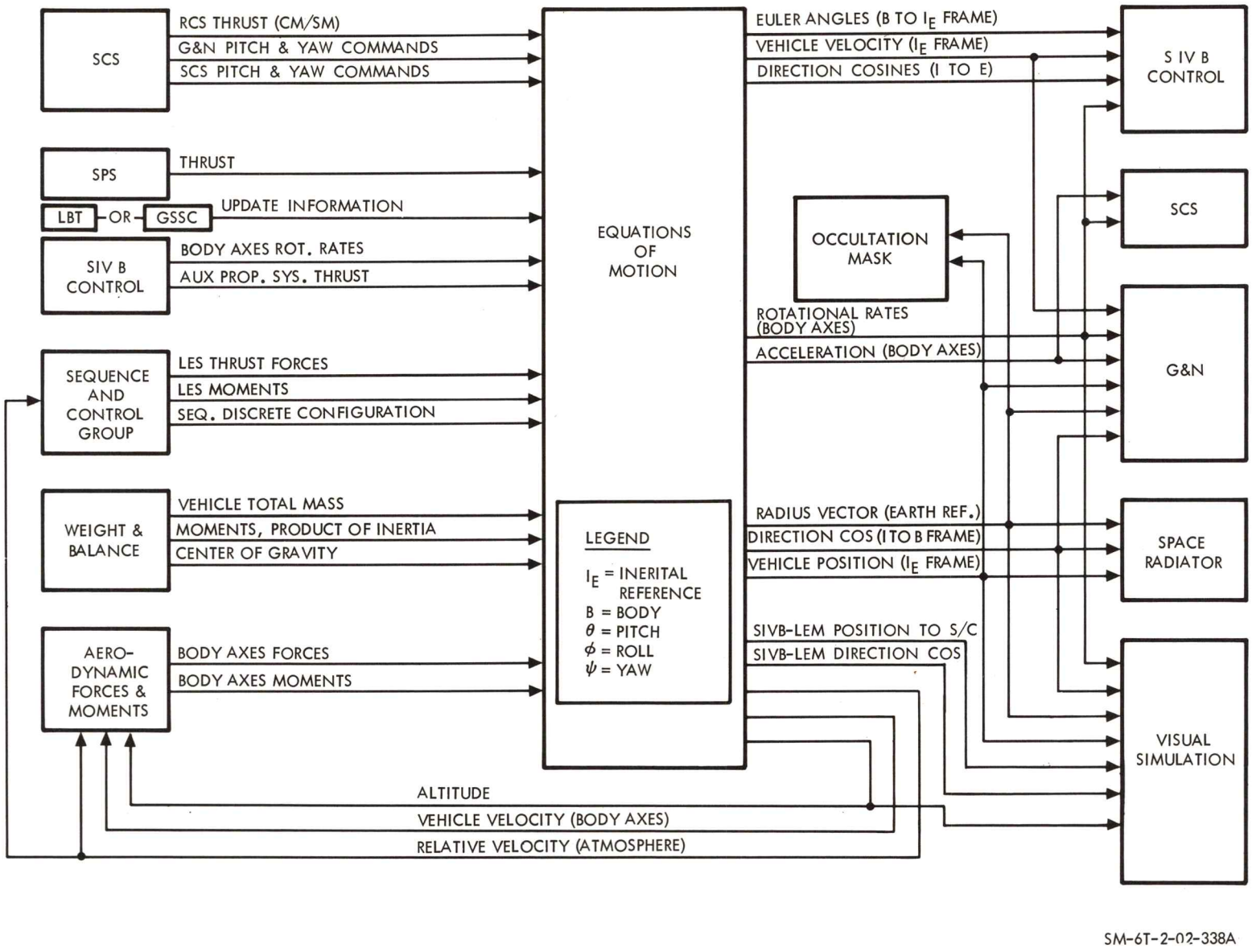

Figure 2-2. Equations of Motion Interface Block Diagram

- The S-IVB control program receives vehicle attitude error in the form of Euler angles. Vehicle velocities, attitude direction cosines, and rotational rates are also sent to the S-IVB control block.

- The SCS and G&N simulations receive rotational rates and acceleration with respect to the body axes from the EOM. These inputs simulate the gyros and accelerometers in the two systems. In addition, the G&N system receives earth radius vector, vehicle position, and direction cosines for use in simulating vehicle location and attitude.

- The space radiators program also uses earth radius vector, vehicle position, and direction cosines from the EOM to determine cooling efficiency simulation.

- The same three EOM outputs, plus body axes rotational rates, are fed to various visual simulation blocks to control out-the-window and optics displays.

2.3.1.3 Computation of EOM.

A block diagram of the equations of motion is shown in figure 2-3. A description of the operations performed within these blocks is the subject of the following paragraphs.

In the vehicle translation loop, the effect of total thrust on the mass of the vehicle is computed to determine body axis acceleration components. Aerodynamic forces are also considered in these calculations. The X body axis acceleration is made available for display during SPS firing. After being converted to the I frame using the I- to B-frame direction cosine, the acceleration components are integrated to determine velocity components. A second integration with time provides vehicle position vectors within the I frame. By comparing these values with earth radius information, geometric altitude is also provided. Vehicle acceleration, velocity, and position are updated by GSSC during the integrated mode, or by the launch boost tape during nonintegrated mode.

Double precision computations will be performed on the vehicle translational loop equations from orbit insertion (S-IVB shutdown) to retrograde for entry, except during thrusting periods.

The total thrust used in the vehicle translational loop is determined by the engine thrust components block. These computations consider all spacecraft and S-IVB booster thrusters (S-IVB main engine, APS, SPS, S/M RCS, and C/M RCS) with respect to the vehicle present center of gravity. Thrust moments are also supplied from this block to the vehicle rotational loop for use in determining body axis rotational rates. Other rotational effects are included in the vehicle rotational loop computations as shown in the block diagram.

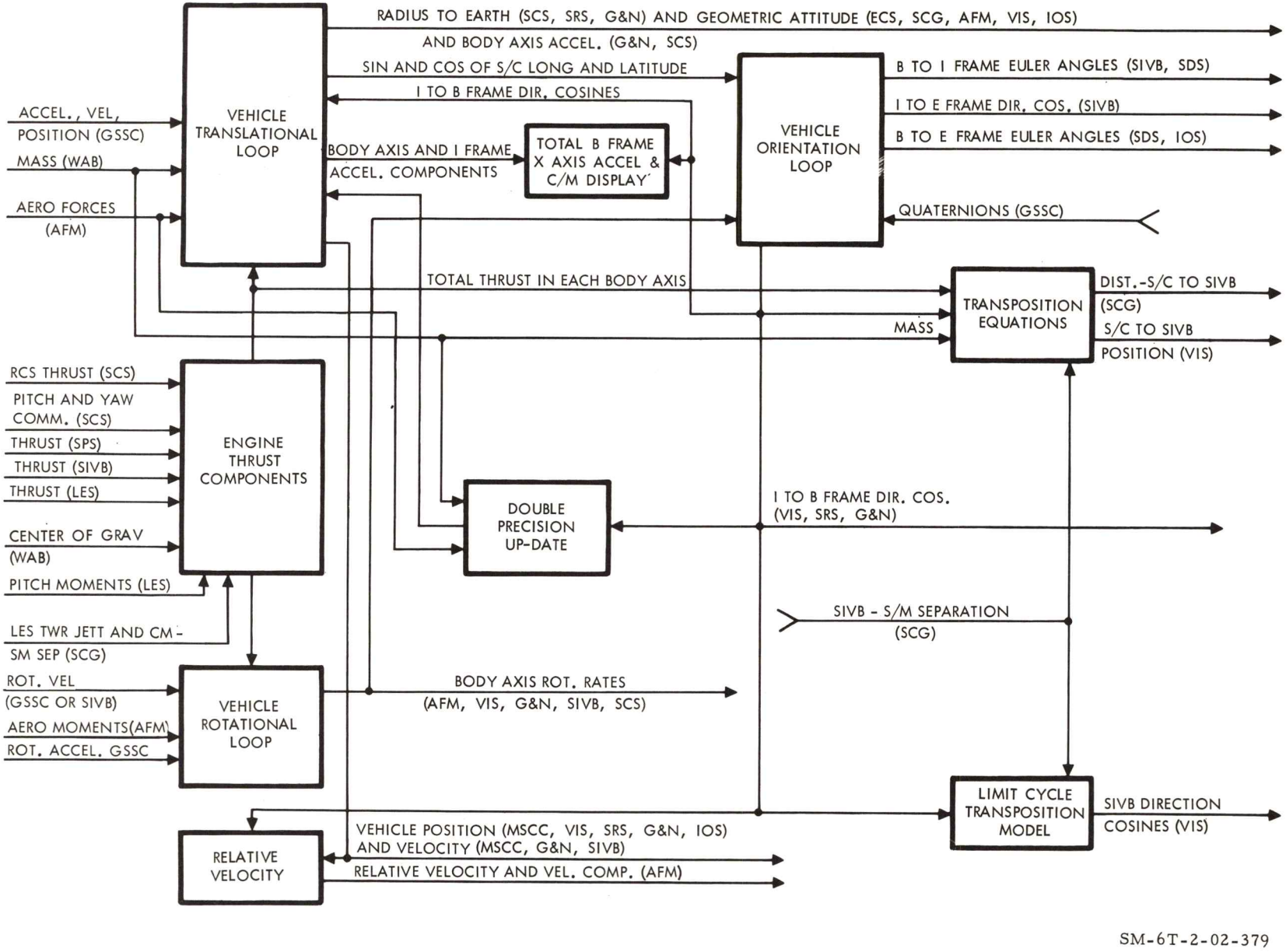

Figure 2-3. Equations of Motion Block Diagram

Vehicle position and velocity out of the vehicle translational loop, in addition to being fed out of the EOM, are sent to the relative velocity block. Here vehicle position and velocity are compared with earth rotation rate to determine vehicle velocity with respect to earth atmosphere.

The vehicle orientation loop provides conversions between the various vehicle position reference frames as required for computations in the other sections of the equations of motion.

The transposition equations are used to compute the simulated position of the spacecraft with respect to the S-IVB-LEM combination. This block will be effective only during transposition and docking simulation.

In the limit cycle block, the simulated position of the S-IVB-LEM, with respect to the other visual simulation units, is calculated. This information is fed to the visual simulation section of the AMS to determine the background for the S-IVB-LEM during transposition and docking simulation.

2.3.1.4 Thrusting System Inputs.

The interrelation between the equations of motion and the thrusting inputs requires some additional explanation. The information loop consists of the equations of motion, the G&N system, the SCS system, the RCS and/or the SPS, and back to the EOM.

The EOM produces outputs which simulate vehicle attitude and attitude rate. Attitude is fed to both the G&N and the SCS. One of these two systems will provide an output of attitude error, dependent upon the attitude mode selected in the SCM. Vehicle rates are sent to the SCS for use in the simulation of the rate gyros. Attitude errors from the G&N or the SCS are combined with the vehicle rates in the SCS to provide attitude correction commands to the RCS and/or the SPS. During a delta V, pitch and yaw commands are sent to the SPS. This causes simulation of corresponding SPS gimbal movement. The gimbal angles are, in turn, sent back to the EOM where computations using SPS thrust, gimbal angles, and vehicle mass determine SPS effect on vehicle attitude and rate.

During nonthrusting time, all pitch and yaw commands are sent to the RCS. The C/M or S/M RCS simulates jet firings to correct the vehicle attitude. Jet on-time and jet maximum thrust for each reaction jet are sent to the EOM. The equations of motion use these signals in the same manner as the SPS gimbal angles and maximum thrust were used. That is, to determine the effect of each jet firing on vehicle attitude and rate.

Roll commands are sent to the RCS even during SPS firing since the SPS is incapable of correcting roll errors.

2.3.1.5 Ephemeris Program.

The Ephemeris program has four main functions. It calculates the direction cosines for the earth-to-sun radius vector, positions vectors for the sun and moon, right ascension of the Greenwich meridian, and the transfer matrix for the selenographic (lunar) reference system. These calculations are made in the earth inertial (D_E) reference frame as explained in paragraph 2.3.1.1. The X axis of this reference system is aligned to the vernal equinox. The vernal equinox changes slightly each year (approximately .01 degree/yr). Therefore, this must be compensated for to ensure an accurate simulation of any given launch date between 1 January 1966 and 1 January 1986.

The number of days, years, and centuries from 1 January 1950 to the launch date, are used to determine the position of the moon, sun, earth and stars in inertial space. Launch "time of day" is used in conjunction with the above to compute the position of specific points on earth with respect to inertial space. This is done by maintaining the angle of the Greenwich meridian with respect to the vernal equinox. Other programs use the "Greenwich hour angle" to determine the location in space of other specific points on the earth's surface.

Once the earth-to-sun radius vector, position vectors for the sun and moon, and right ascension of the Greenwich meridian have been established for a specific launch date and time, their further movement is a function of real time in the computer.

Lunar librations, or apparent oscillations of the moon's surface with respect to earth, are also simulated in the ephemeris program. These oscillations are due to the elliptical orbit of the moon about the earth while it rotates at a constant speed. These are called librations in longitude. Librations in latitude are caused by the moon's axis of rotation being 6.5 degrees off the plane of its orbit about the earth.

Simulation of these librations is required to allow use of lunar landmarks in navigation sightings from the simulated command module.

2.3.2 AERODYNAMIC FORCES AND MOMENTS PROGRAM.

The aerodynamic forces and moments program provides simulation of the effects of spacecraft motion through the atmosphere. The results of the computations involved become factors in the equations of motion. The aerodynamic forces and moments are applicable only during phases involving movement through the atmosphere (launch, entry, and suborbital abort). The aerodynamic forces and moments generated during launch-boost are accounted for on the launch tapes and are not part of the aerodynamics forces and moments program.

Figure 2-4 is a block diagram of the aerodynamic forces and moments program. Inputs to the program are shown along the left of the figure. The three configurations requiring simulation are as follows:

- Command module and service module
- Command module and launch escape tower (canards deployed)
- Command module only.

Dynamic pressure is determined as a function of simulated altitude and relative velocity. It is then used as one of the forces affecting spacecraft movement during entry. The speed of sound is a function of altitude only and is used to determine the mach number from the relative velocity. Both the relative velocity and the mach number are used in computing body axis forces and moments.

The total angle of attack, as determined from the various relative velocity inputs, includes sideslip (Y axis) while the angle of attack computation includes only X and Z body axis inputs. Rotational and translational aerodynamic coefficients are calculated from the bases of angle of attack, mach number, and vehicle configuration.

All of the above terms, plus roll angle and the effects of parachute deployment on the vehicle, are combined to provide body axis aerodynamic forces and body axis aerodynamic moments.

At altitudes above 500,000 feet; aerodynamic forces and moments will not be calculated.

In addition to the basic aerodynamic solution, other effects are accounted for in the program. Such items as heat shield jettison, LES motors on, etc., are switched into the solution by Boolean logic, as required.

2.3.3 WEIGHT AND BALANCE PROGRAM.

The weight and balance program simulates the mass characteristics of the vehicle during all phases of the simulated mission except launch-boost. Weight and balance characteristics during the launch-boost phase are provided either by the preprogramed tape (nonintegrated mode) or the MSCC (integrated mode).

Figure 2-5 is a block diagram of the weights and balance solution. Inputs include the vehicle configuration and various factors which affect the total mass such as fuel, oxidizer, cryogenics, etc. Outputs are fed to the equations of motion visuals and aerodynamics forces and moments. These outputs consist of total mass, moments of inertia, product of inertia, and center of gravity location.

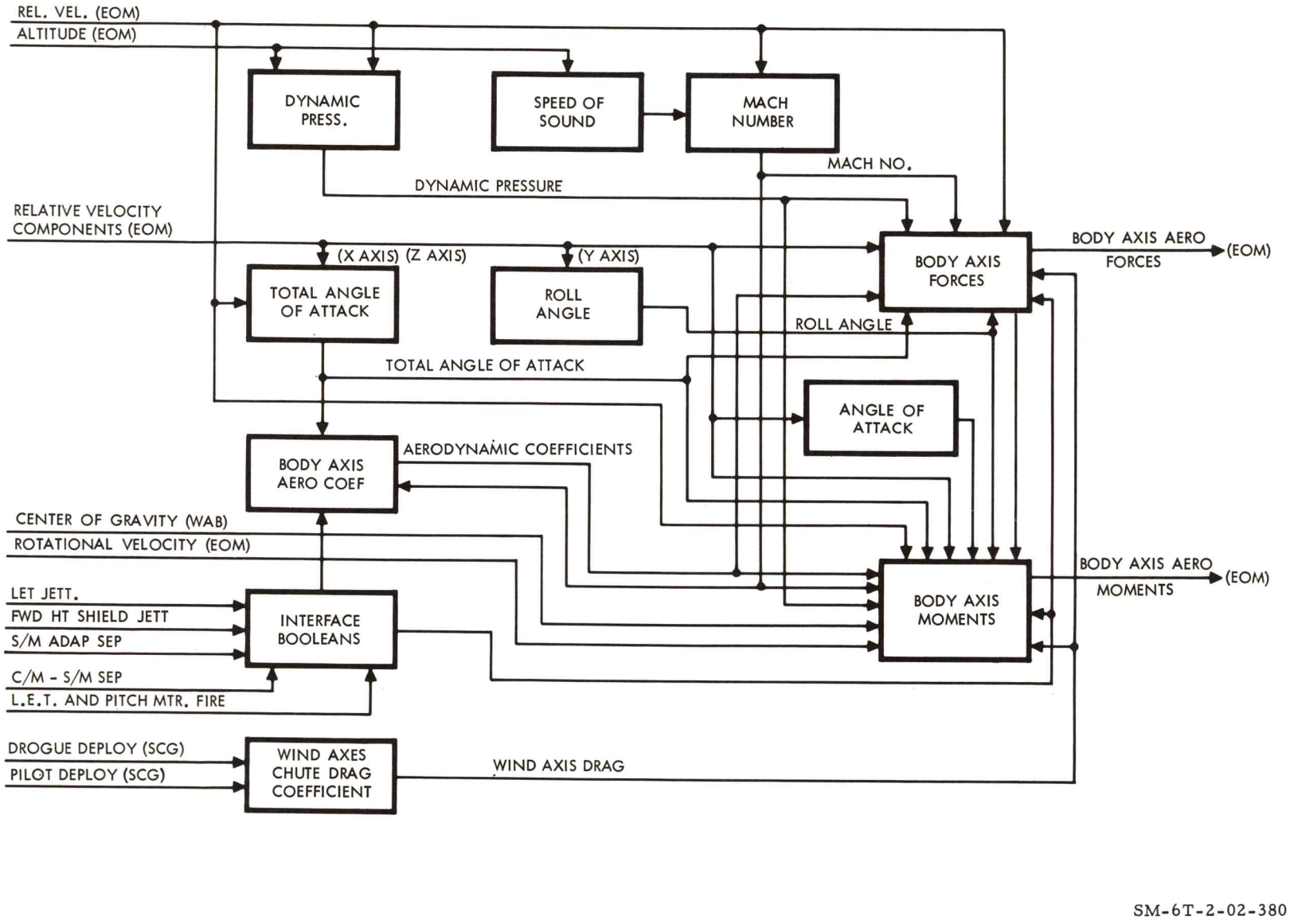

SM-6T-2-02-380

Figure 2-4. Aerodynamic Forces and Moments Block Diagram

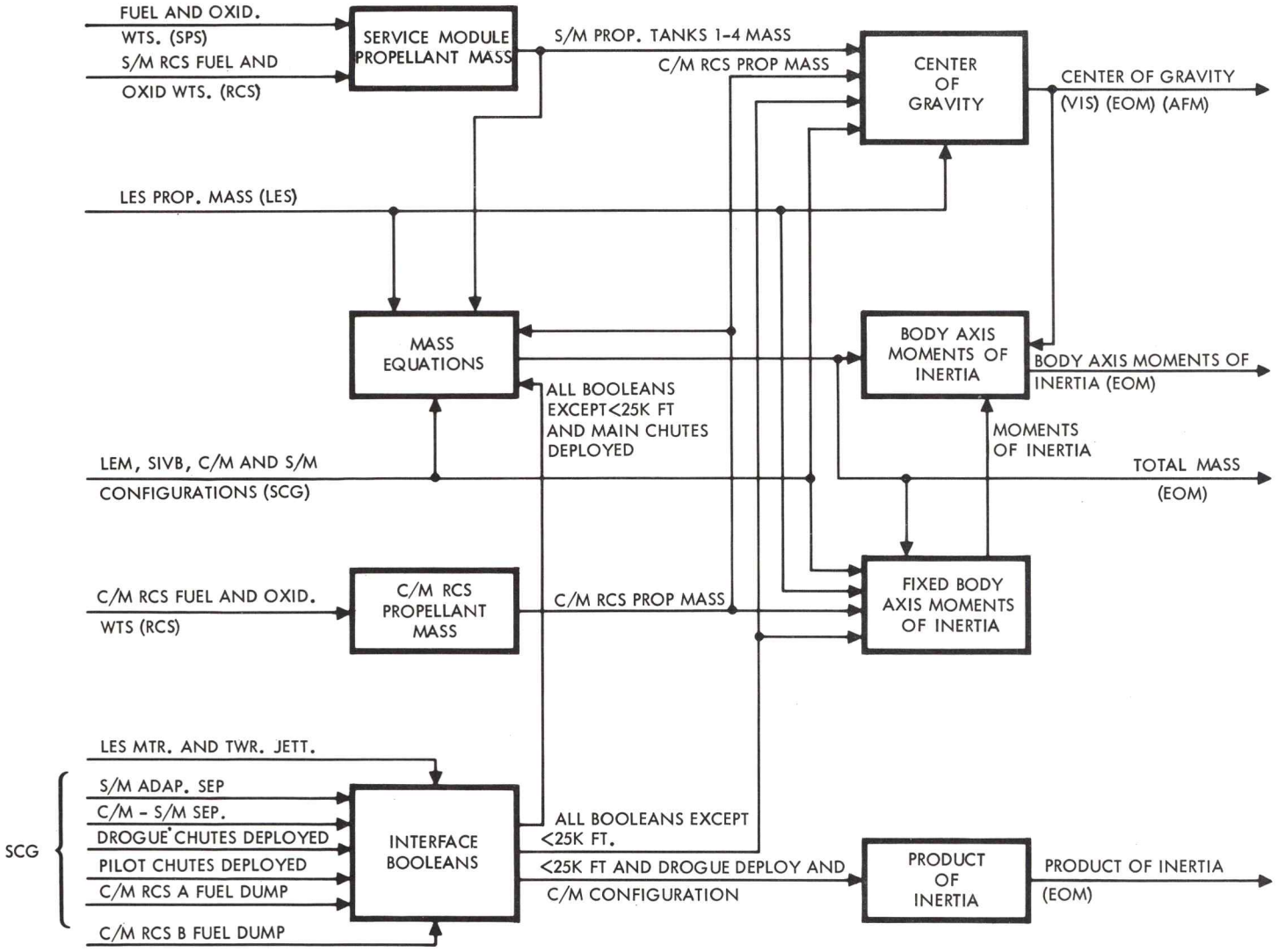

SM-6T-2-02-381

Figure 2-5. Weights and Balance Block Diagram

The total mass of the vehicle is obtained by adding the masses of the individual vehicle components. The total mass is updated from computations made in other system programs as a result of depletion of consumables and changes in vehicle configuration due to vehicle component separation or transposition. The product of the computation, vehicle total mass, is used in determining moments of inertia and in the equations of motion.

Three equations are used to compute moments of inertia in the three fixed body axes. These equations compare total mass vehicle configuration and propellant masses to inertia in each axis. SPS propellants are considered to be equally distributed within their tanks, except when thrusting when they settle to the bottom of the tank. The fixed body moments of inertia for the entire vehicle are the summation of the inertia of all individual items within the vehicle. The three resultants are transferred to the body axes on the basis of instantaneous center of gravity.

Equations defining the location of the vehicle center of gravity during all mission phases are used to establish a reference point for basing moments of inertia and aerodynamic moments in the aerodynamic forces and moments program. Information used to determine the location of the center of gravity include vehicle configuration, mass of each major vehicle component, and mass of propellant in each of the various propellant tanks.

When it becomes an important factor, the product of inertia of the command module is provided. Only the X and Z body axes are considered, as the Y axis component of inertia is insignificant. The X-Z product of inertia is a constant 190 slugs and will be provided during entry when drogue chutes are deployed or when 25,000 feet altitude is reached.

2.3.4 S-IVB ATTITUDE CONTROL SYSTEM SIMULATION.

The AMS simulation of the S-IVB includes only the inertial attitude control mode. This simulation commences at orbit injection, as the launch boost tape simulates the S-IVB output signals until orbit is attained. Figure 2-6 is a block diagram of the AMS simulation.

Vehicle attitude from the equations of motion (EOM) is compared to commanded vehicle attitude. The resulting attitude errors are fed to the attitude error gain section of the S-IVB program. After being amplified by their respective gain factors, the pitch, yaw, and roll attitude errors are sent through the mode control block to the engine command signals block.

Simulated rate gyro signals from the EOM are modified by the attitude rate limiter and attitude rate gain control blocks. Attitude errors and vehicle rates are combined in the engine command signals block to furnish pitch, yaw, and roll commands.

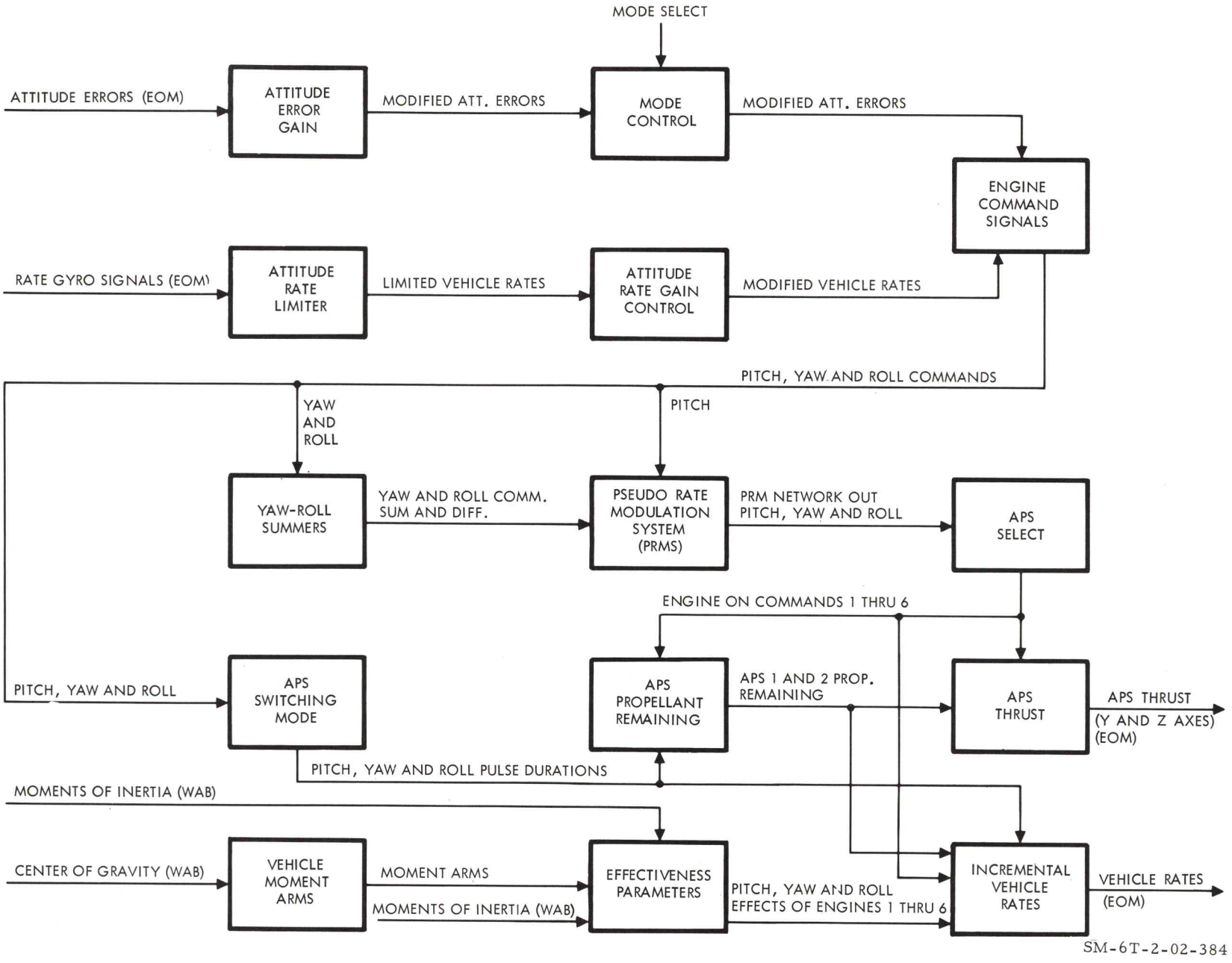

Figure 2-6. S-IVB Control and Thrusting Systems Simulation

The yaw and roll commands are combined in the yaw and roll summer. The sum and differences between these signals are fed to the pseudo-rate modulation system (PRMS).

Pitch commands are fed directly from the engine command signals block to the PRMS. In the PRMS, each of the pitch, yaw, and roll command signals causes an opposing signal (or pseudo rate) prior to any actual rate generation. This simulates the prohibition of any unnecessarily rapid changes in attitude commands. The pitch, yaw, and roll commands are then sent to the APS select block where they determine which of the six APS engines are to be commanded on.

The six APS engines are pulsed on and off in order to conserve propellants. This function is simulated by the APS switching mode block working from the pitch, yaw, and roll commands out of the engine command signals block. The resulting pitch, yaw, and roll pulse duration signals are fed to the APS propellant remaining and incremental vehicle rates blocks.

In the APS propellant remaining block, engine-on commands are combined with pitch, yaw, and roll pulse durations in an integration process to simulate total APS propellants remaining in APS-1 and APS-2. Boolean terms, indicating propellants are, or are not, available in each APS system are sent from the APS propellant remaining block to the APS thrust and incremental vehicle rates blocks.

Engine-on commands one through six, combined with constants for engine thrust and APS propellant remaining booleans, result in APS thrust components in the Y and Z body axes being outputed from the APS thrust block.

The vehicle center of gravity from the weight and balance program is used with the vehicle moment arms block to determine the effect of pitch and yaw commands on vehicle attitude. Since the roll moment arm will not vary with vehicle configuration, it is not computed in this block.

Pitch and yaw moment arms, along with the constant roll moment arm, are combined with moments of inertia, from the weights and balance program, in the effectiveness parameters block to determine the effect of firing any one of the six APS engines at any time. These effects, plus pitch, yaw, roll pulse durations; engine-on commands, and APS propellant remaining booleans are all combined within the incremental vehicle rates block to calculate vehicle rates in each of the three axes. These outputs are sent to the equations of motion program along with APS thrust signal.

2.4 STABILIZATION AND CONTROL SYSTEM.

2.4.1 SCS CONFIGURATION REFERENCE.

At the time of this writing, the AMS SCS accurately simulates the stabilization and control system in SC012. Figures 2-7 through 2-9 are

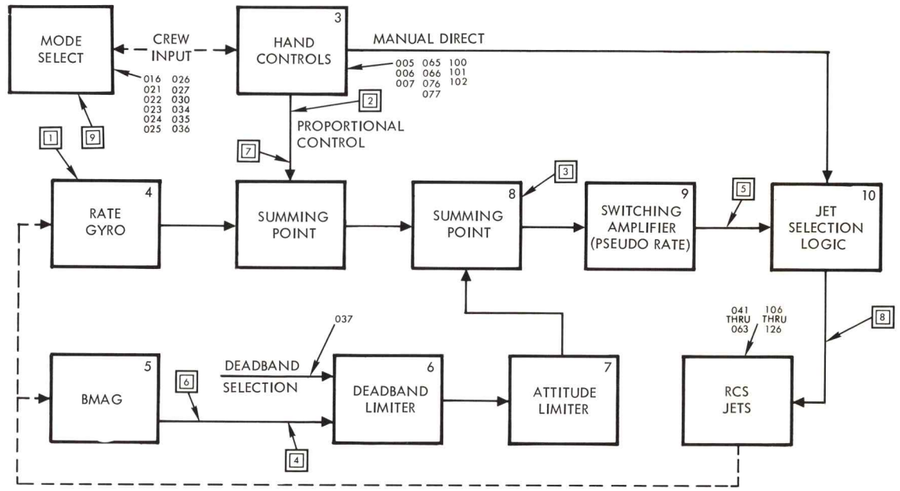

SCS ATTITUDE CONTROL SYSTEM T/M SIGNAL

NO	SIGNAL DESCRIPTION	T/M CODE
1	PITCH RATE	CH0024V
	YAW RATE	CH1024V
	ROLL RATE	CH2024V
2	PITCH MONITOR ROTATION CONTROL	CH0025V
	YAW MONITOR ROTATION CONTROL	CH1025V
	ROLL MONITOR ROTATION CONTROL	CH2025V
3	PITCH INTEGRATOR/ATT. ERROR SUMMING	CH0067V
	YAW INTEGRATOR/ATT. ERROR SUMMING	CH1067V
4	PITCH SCS ATTITUDE ERROR	CH0075V
	YAW SCS ATTITUDE ERROR	CH1075V
	ROLL SCS ATTITUDE ERROR	CH2075V
5	ROLL ATTITUDE ERROR AMP. OUTPUT	CH2070V
6	COMBINED ATTITUDE GYRO TEMP.	CH2030T
7	ROLL ECA +Z TRANSLATION STICK CONDITION	CH2081X
	ROLL ECA -Z TRANSLATION STICK CONDITION	CH2082X
	ROLL ECA +Y TRANSLATION STICK CONDITION	CH2083X
8	REACTION JET #9 SOLENOID DRIVER OUT	CH2087X
	REACTION JET #10 SOLENOID DRIVER OUT	CH2088X
	REACTION JET #11 SOLENOID DRIVER OUT	CH2089X
	REACTION JET #12 SOLENOID DRIVER OUT	CH2090X
	REACTION JET #13 SOLENOID DRIVER OUT	CH2091X
	REACTION JET #14 SOLENOID DRIVER OUT	CH2092X
	REACTION JET #15 SOLENOID DRIVER OUT	CH2093X
	REACTION JET #16 SOLENOID DRIVER OUT	CH2094X
9	G&N DELTA V MODE	CH0100X
	SCS DELTA V MODE	CH1100X
	SCS LOCAL VERTICAL CONTROL MODE	CH1103X

SCS ATTITUDE CONTROL SYSTEM MALFUNCTIONS

MALF. NO.	MALFUNCTION DESCRIPTION	MALF. NO.	MALFUNCTION DESCRIPTION
SC 005	ROLL ROTATIONAL HAND CONTROLLER FAILS OPEN	SC 065	TRANSLATIONAL CONTROL (-Y DIRECTION) FAILS OPEN
SC 006	PITCH ROTATIONAL HAND CONTROLLER FAILS OPEN	SC 066	TRANSLATIONAL CONTROL (+Z DIRECTION) FAILS OPEN
SC 007	YAW ROTATIONAL HAND CONTROLLER FAILS OPEN	SC 076	ROTATIONAL CONTROL +P MICROSWITCH FAILS OPEN
SC 016	MINIMUM IMPULSE ENABLE SWITCH FAILS OPEN	SC 077	ROTATIONAL CONTROL -Q MICROSWITCH FAILS OPEN
SC 021	MONITOR MODE SELECT SWITCH FAILS OPEN	SC 100	ROTATIONAL CONTROL +R MICROSWITCH FAILS OPEN
SC 022	SCS ATTITUDE CONTROL SELECT SWITCH FAILS OPEN	SC 101	MIN. IMPULSE CONTROL - P MICROSWITCH FAILS OPEN
SC 023	SCS LOCAL VERTICAL SELECT SWITCH FAILS OPEN	SC 102	MINIMUM IMPULSE CONTROL - R MICROSWITCH FAILS OPEN
SC 024	G&N ATTITUDE CONTROL SELECT SWITCH FAILS OPEN	SC 106	REACTION JET #9 FAILS OFF (S/M-C/M)
SC 025	SCS ΔV MODE SELECT SWITCH FAILS OPEN	SC 107	REACTION JET #10 FAILS ON (S/M-C/M)
SC 026	G&N ΔV MODE SELECT SWITCH FAILS OPEN	SC 111	REACTION JET #10 FAILS OFF (S/M-C/M)
SC 027	SCS ENTRY MODE SELECT SWITCH FAILS OPEN	SC 112	REACTION JET #11 FAILS ON (S/M-C/M)
SC 030	G&N ENTRY MODE SELECT SWITCH FAILS OPEN	SC 113	REACTION JET #11 FAILS OFF (S/M-C/M)
SC 034	"A&C ROLL" CHANNEL DISABLE SWITCH FAILS OPEN	SC 114	REACTION JET #12 FAILS ON (S/M-C/M)
SC 035	"B&D ROLL" CHANNEL DISABLE SWITCH FAILS OPEN	SC 115	REACTION JET #12 FAILS OFF (S/M-C/M)
SC 036	0.05g SENSE BACKUP SWITCH FAILS OPEN	SC 116	S/M REACTION JET #13 FAILS ON
SC 037	DEADBAND SELECT SWITCH SHORTED TO 0.5° POS.	SC 117	S/M REACTION JET #13 FAILS OFF
SC 041	REACTION JET #1 FAILS ON (SM-C/M)	SC 121	S/M REACTION JET #14 FAILS ON
SC 042	REACTION JET #1 FAILS OFF (S/M-C/M)	SC 122	S/M REACTION JET #14 FAILS OFF
SC 043	REACTION JET #2 FAILS ON (S/M-C/M)	SC 123	S/M REACTION JET #15 FAILS ON
SC 044	REACTION JET #2 FAILS OFF (S/M-C/M)	SC 124	S/M REACTION JET #15 FAILS OFF
SC 045	REACTION JET #3 FAILS ON (S/M-C/M)	SC 125	S/M REACTION JET #16 FAILS ON
SC 046	REACTION JET #3 FAILS OFF (S/M-C/M)	SC 126	S/M REACTION JET #16 FAILS OFF
SC 047	REACTION JET #4 FAILS ON (S/M-C/M)		
SC 051	REACTION JET #4 FAILS OFF (S/M-C/M)		
SC 052	REACTION JET #5 FAILS ON (S/M-C/M)		
SC 053	REACTION JET #5 FAILS OFF (S/M-C/M)		
SC 054	REACTION JET #6 FAILS ON (S/M-C/M)		
SC 055	REACTION JET #6 FAILS OFF (S/M-C/M)		
SC 056	REACTION JET #7 FAILS ON (S/M-C/M)		
SC 057	REACTION JET #7 FAILS OFF (S/M-C/M)		
SC 061	REACTION JET #8 FAILS ON (S/M-C/M)		
SC 062	REACTION JET #8 FAILS OFF (S/M-C/M)		
SC 063	REACTION JET #9 FAILS ON (S/M-C/M)		

SM-6T-2-02-332A

Figure 2-7. SCS Attitude Control Subsystem

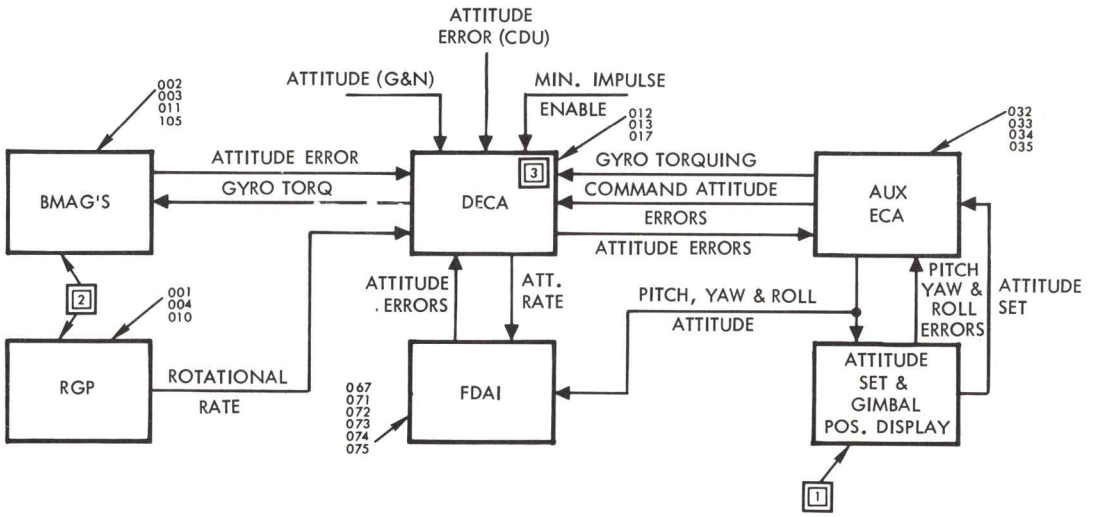

SCS BMAG-AGCU-FDAI SUBSYSTEM T/M SIGNALS		
NO.	SIGNAL DESCRIPTION	T/M CODE
1.	PITCH POSITION FEEDBACK	CH0034H
	YAW POSITION FEEDBACK	CH1034H
2.	COMBINED ATTITUDE GYRO SMRD	CH2015V
	COMBINED RATE GYRO SMRD	CH2026V
3.	RESOLVER SIN OUTPUT-PITCH ATTITUDE	CH4100H
	RESOLVER COS OUTPUT-PITCH ATTITUDE	CH4101H
	RESOLVER SIN OUTPUT-YAW ATTITUDE	CH4102H
	RESOLVER COS OUTPUT-YAW ATTITUDE	CH4103H
	RESOLVER SIN OUTPUT-ROLL ATTITUDE	CH4104H
	RESOLVER COS OUTPUT-ROLL ATTITUDE	CH4105H

SCS BMAG-AGCU-FDAI SUBSYSTEM MALFUNCTIONS	
MALF. NO.	MALFUNCTION DESCRIPTION
SC 001	YAW RATE GYRO FAILS OPEN
SC 002	YAW BMAG FAILS OPEN
SC 003	PITCH BMAG FAILS OPEN
SC 004	PITCH RATE GYRO FAILS OPEN
SC 010	ROLL RATE GYRO FAILS OPEN
SC 011	ROLL BMAG FAILS OPEN
SC 012	PITCH GIMBAL POSITION FAILS-ZERO O.P.
SC 013	YAW GIMBAL POSITION FAILS-ZERO O.P.
SC 017	ATTITUDE GYRO COUPLER UNIT FAILS OPEN
SC 032	PITCH CHANNEL DISABLE SWITCH FAILS OPEN
SC 033	YAW CHANNEL DISABLE SWITCH FAILS OPEN
SC 034	A&C ROLL CHANNEL DISABLE SWITCH FAILS OPEN
SC 035	B&D ROLL CHANNEL DISABLE SWITCH FAILS OPEN
SC 067	FDAI ATTITUDE BALL FAILS-OPEN
SC 071	FDAI ROLL ERROR FAILS OPEN
SC 072	FDAI YAW ERROR FAILS OPEN
SC 073	FDAI PITCH RATE FAILS OPEN
SC 074	FDAI ROLL RATE FAILS OPEN
SC 075	FDAI YAW RATE FAILS OPEN
SC 105	AGAP HEATER FAILURE - SHORTED

SM-6T-2-02-331A

Figure 2-8. BMAG-AGCU-FDAI Subsystem

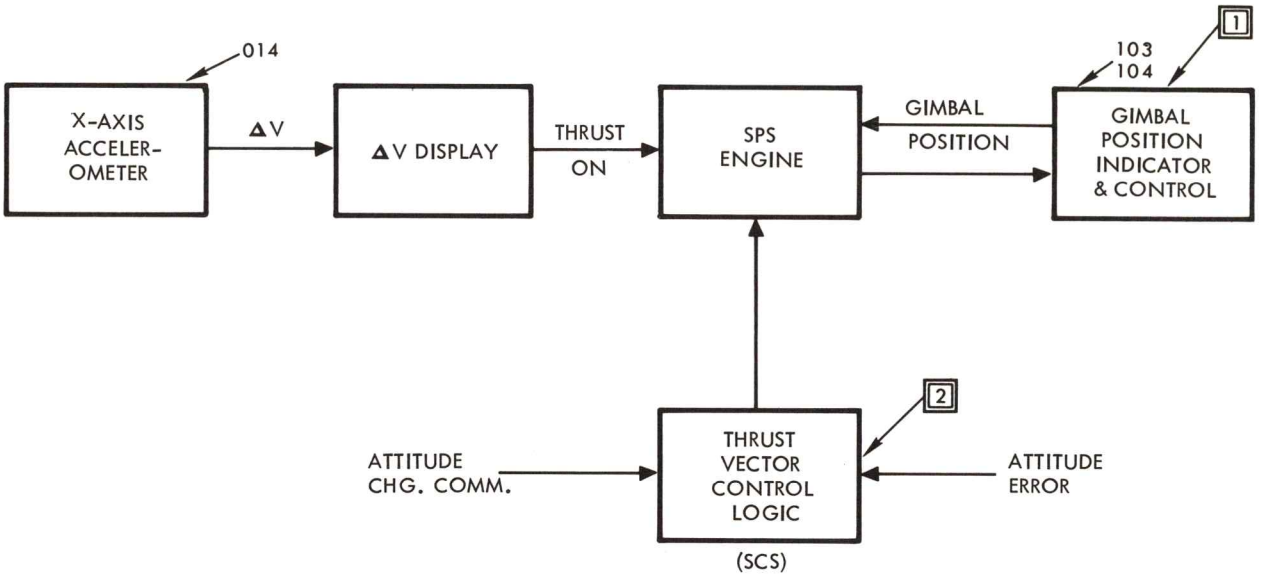

SCS THRUST VECTOR CONTROL MALFUNCTIONS	
MALF. NO.	MALFUNCTION DESCRIPTION
SC 014	SCS ACCELEROMETER FAILS
SC 103	PITCH GIMBAL DRIVE FAILS
SC 104	YAW GIMBAL DRIVE FAILS

SCS THRUST VECTOR CONTROL SUBSYSTEM T/M SIGNALS		
NO	SIGNAL DESCRIPTION	T/M CODE
1	PITCH THRUST VECTOR DIFFERENTIAL CLUTCH VOLTAGE YAW THRUST VECTOR DIFFERENTIAL CLUTCH VOLTAGE	H0047V H1047V
2	SPS SOLENOID DRIVER OUTPUT 1 SPS SOLENOID DRIVER OUTPUT 2	H4320X H4321X

SM-6T-2-02-301A

Figure 2-9. Thrust Vector Control Subsystem

block diagrams of the actual S/C 012 SCS subsystems. Malfunctions and telemetry points simulated by the AMS are shown in figure 2-7 at their point of effect.

2.4.2 SCS SIMULATION.

Simulation of the SCS is accomplished by four computer programs. These are the power and mode control logic, attitude control subsystems, thrust vector control subsystems, and inertial sensors programs.

2.4.2.1 Power and Mode Control Logic.

The power and mode control logic program computes the availability of power to the various portions of the SCS. A block diagram of this program is shown in figure 2-10. If power is unavailable to the SCS control switches due to EPS program outputs, SCS simulation is inhibited or terminated (whichever is appropriate). Power loading is computed on the basis of SCS switch selection. These switch selections are also used to determine SCS operational configuration modes and SCS system displays. In addition to these functions, this program accomplishes the selection/isolation of gyros in accordance with mode and switching selections.

2.4.2.2 Attitude Control Subsystem.

The attitude control subsystem program, as shown in figure 2-11, determines both attitude and rate deadbands and their limits as dictated by system mode and system configuration. The attitude deadband and attitude error are then compared to determine if an attitude correction is required. If so, the proper reaction jet firings are simulated. These firings are limited as a function of rate error after rate deadband has been deducted. Reaction jet firings are controlled directly by the switching amplifiers. The acceleration available from each reaction jet is computed and compared to the acceleration required from each jet. The resultant is used to determine the on-off time for the switching amplifiers. Translation and rotation commands from the hand controllers are also processed within the attitude control program. The main outputs from this program are RCS reaction jet solenoid on commands.

2.4.2.3 Thrust Vector Control (TVC) Program.

The TVC program provides simulation of the thrust vector control portion of the stabilization and control system including SPS engine gimbal positioning from G&N, SCS, and astronaut manual control commands. Provisions are included for automatic and manual SPS engine ignition commands. Figure 2-12 illustrates the TVC simulation in the AMS. The THRUST ON command is sent out during SCS or G&N delta V modes one second after the THRUST ON switch is enabled. The same group of equations controls the turning off of thrust as a function of the THRUST OFF switch or removal of a-c or d-c power from the TVC circuitry.

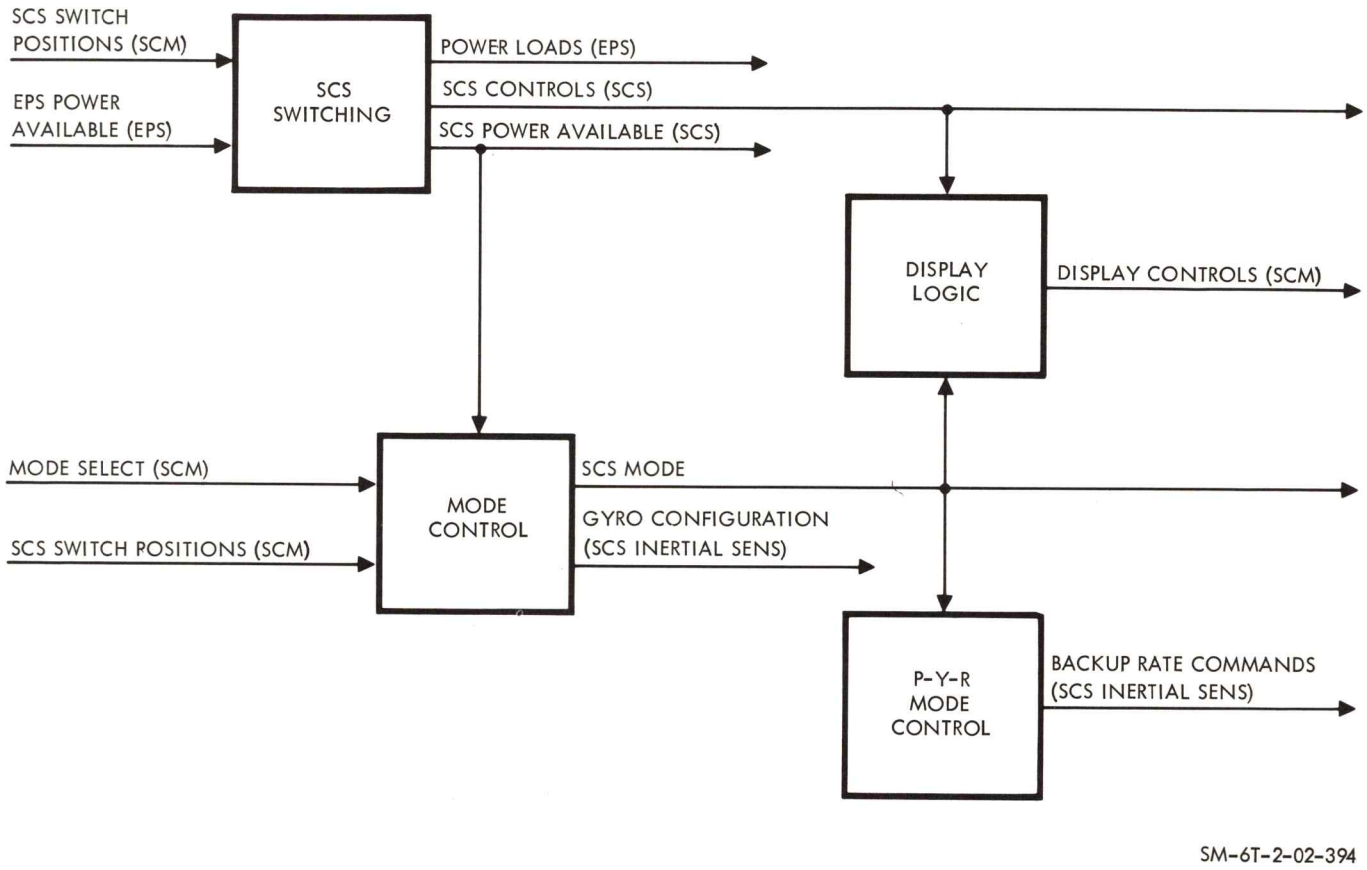

Figure 2-10. SCS Power and Mode Control Simulation

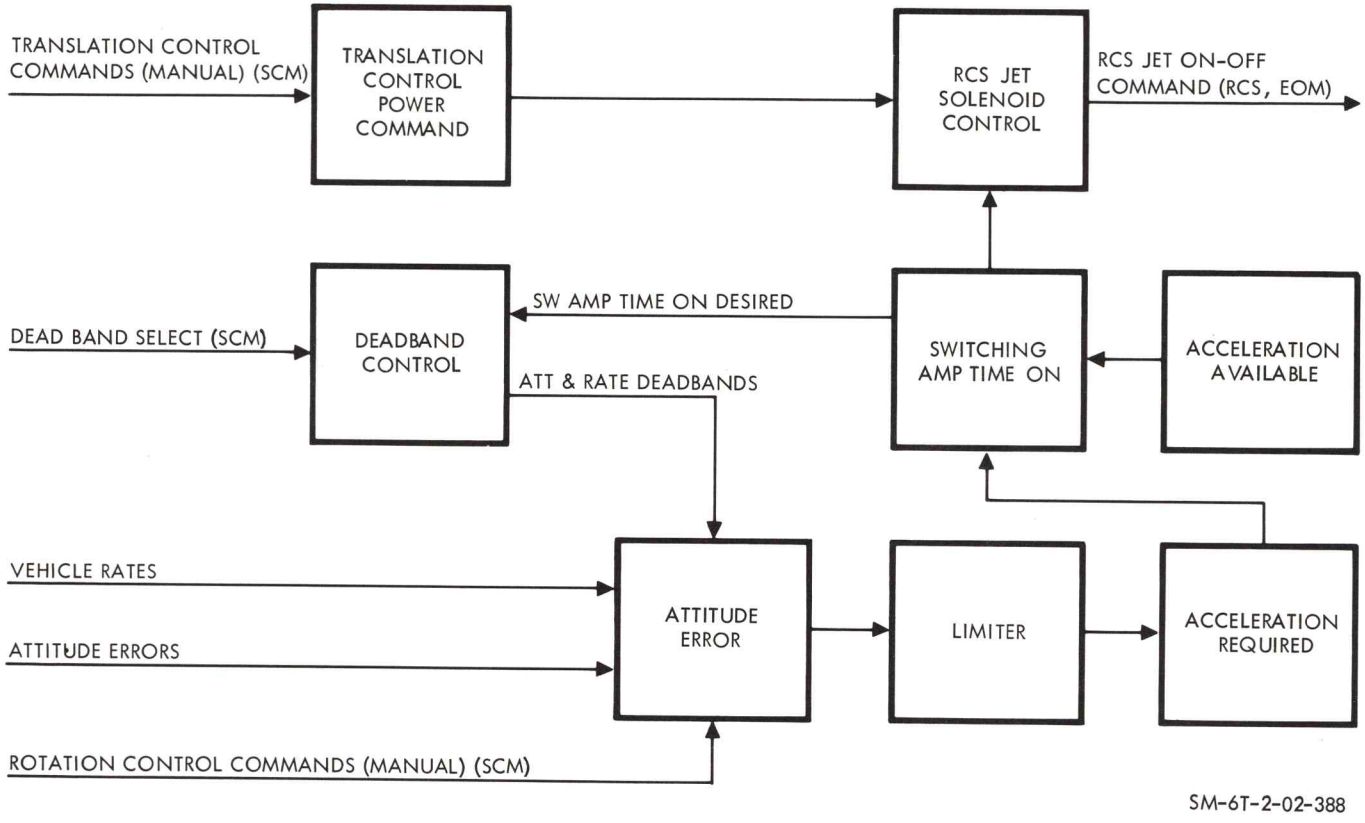

Figure 2-11. Attitude Control Subsystem Simulation

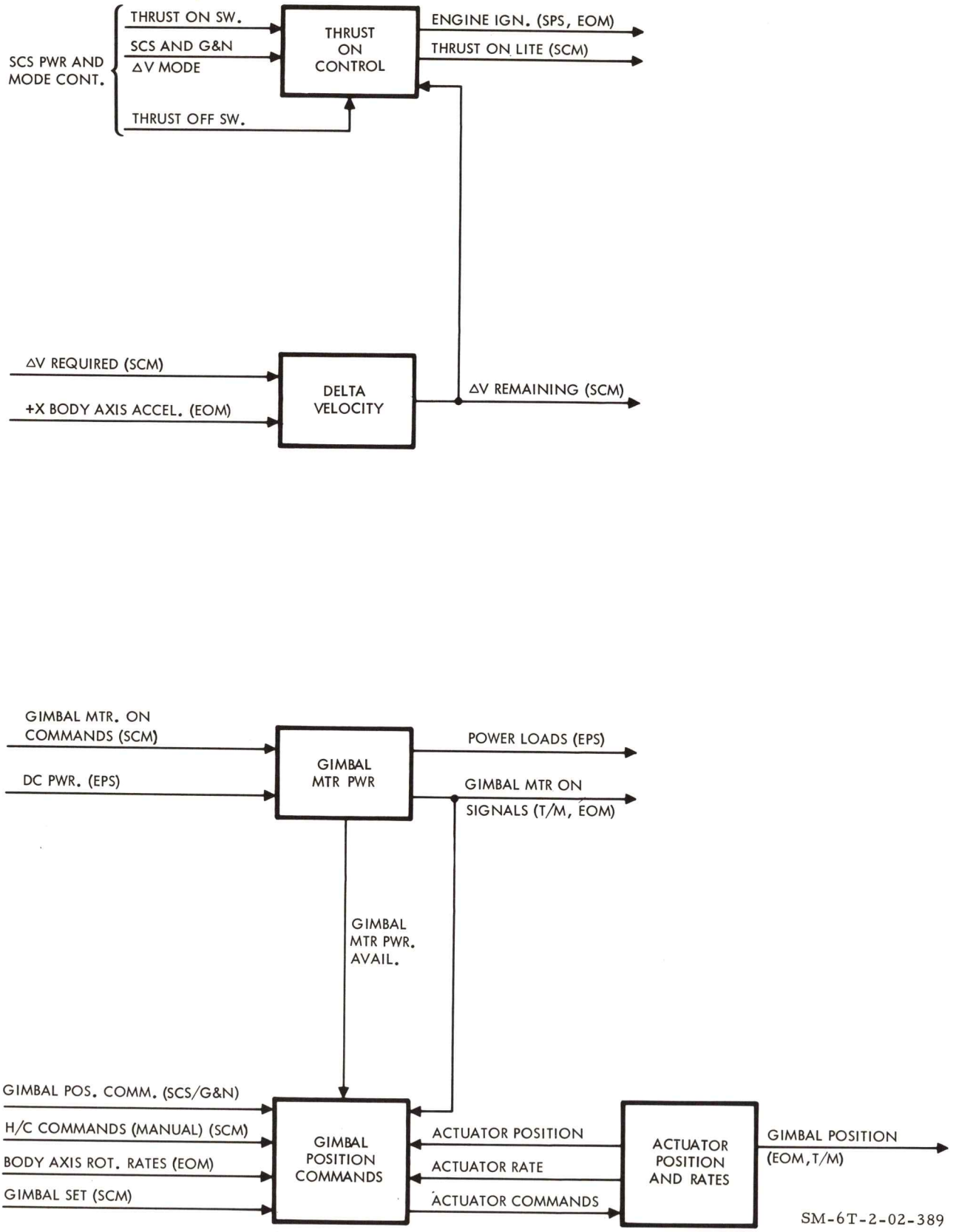

Figure 2-12. Thrust Vector Control Subsystem Simulation

The amount of velocity gained during SPS firing is obtained from the equations of motion and is used to determine SPS cutoff time during SCS and G&N delta V modes.

Power applied to the four gimbal motors is controlled by the command module switch position and electrical power availability. Simulation of power loading is a constant value provided to the electrical power system simulation programs when these gimbal motors are on. Attitude errors, both from the SCS or G&N and from manual positioning of the rotation control, are processed in the TVC program to cause a corresponding change in the SPS gimbal position during any SPS firing. The simulated gimbal positions are fed to indicators both in the SCM and at the IOS. Gimbal actuator accelerations and rates are generated within the program as a function of the G&N, SCS, or manual gimbal positioning commands. These are transmitted for use in the equations of motion. All feedback signals required to realistically simulate the operations of the thrust vector control subsystem of the SCS are generated and used within this program. Also, certain of these feedback signals are fed to the PCM telemetry for use as indications of overall subsystem operation.

2.4.2.4 Inertial Sensors Program.

The SCS inertial sensors program shown in figure 2-13 processes the rotation control commands to the TVC and telemetry during SPS firings. Rate gyro outputs are simulated using inputs from the equations of motion and SCM switch positions. Based on SCM switch positions, the simulated body-mounted attitude gyro (BMAG) outputs may be substituted for the rate gyro signals. This backup function is accomplished by individual axis (pitch, yaw and roll). The BMAGs simulation normally supplies vehicle attitude. A signal is sent to the aural simulation program for each rate gyro and BMAG when each gyro is operating. Attitude set error, the difference between commanded attitude and BMAG output, is simulated using EOM signals and SCM attitude set dial outputs. These error signals are provided in the form of Euler angle, nav axis, and body axis components. The G&N attitude errors are sent to the TVC and attitude control system. The attitude set errors are used in simulation of the AGCU attitude errors, shaft angles, and torquer signals.

Based on the normal orbital pitch rate, an orbital rate signal is sent out to the attitude control system during local vertical mode. Program outputs of attitude rate, attitude error, and vehicle attitude are fed to the IOS and SCM FDAI. Attitude set selection is also fed to the IOS. AGAP temperature is simulated when AGAP power is applied and the gyro heaters are operating normally. When power is applied to each gyro, an output is sent to telemetry simulating the spin motor rotation detector signal. The value of this signal varies with the different combinations of the pitch, yaw, and roll gyros being energized.

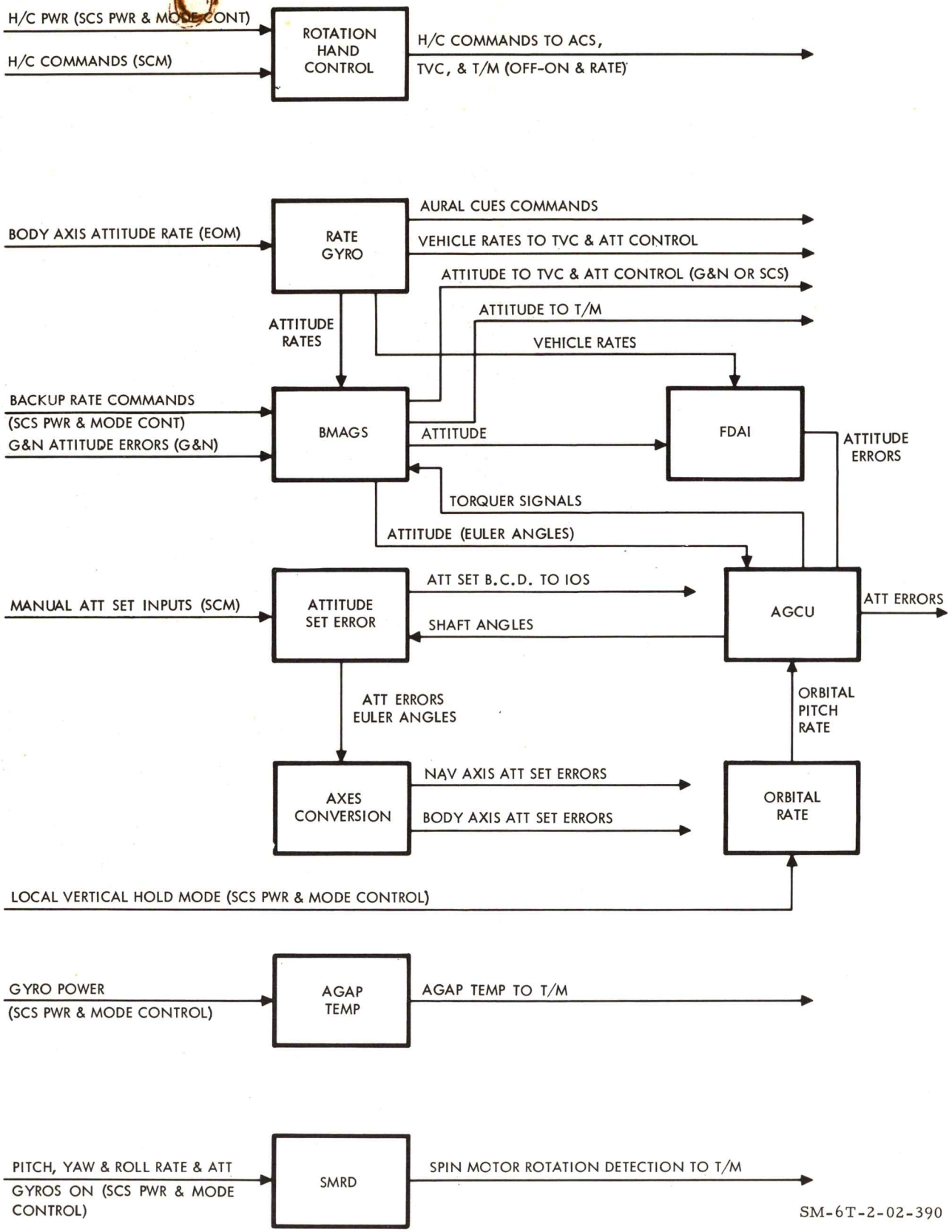

Figure 2-13. SCS Inertial Sensors Simulation

2.5 VISUAL SYSTEMS.

The visual systems provide the AMS SCM with realistic scenes of the earth, moon, sun, stars, and docking vehicle during a simulated mission. These scenes are provided at the two landing windows, the two docking windows, and the telescope and sextant optics.

These visual displays are provided by the mission effects projectors, celestial spheres, sextant optics, telescope optics, and transposition image generator. A computer program controls each of these units.

2.5.1 MISSION EFFECTS PROJECTOR (MEP).

The MEPs provide earth scenes at the four window displays and the simulated telescope visual display. The MEPs also provide sun image generation at the four window displays. Each MEP provides the following scenes and effects:

- Earth orbital scenes in color
- Landing scenes in color (parachutes)
- Distant moon scenes
- Sunrise effects
- Horizon control (limb)
- Day-night termination
- Solar simulation (except for telescope MEP)
- SCM position and attitude simulation.

Each of the five MEPs consists of a central image generation assembly, a transboundary (peripheral area cloud cover) assembly, and a sun-shafting assembly. Figure 2-14 illustrates the component parts of an MEP. The image generation assembly selects the proper film and projects the images from this film onto the MEP screen. The transboundary assembly generates cloud scenes, and the sun image projector assembly (present in window MEP units only) provides the sun images for the scenes being viewed. Each of the assemblies uses a common projection screen and shares electronics cabinets and power cabinets. The image generation and transboundary assemblies will provide an entire limb-to-limb (horizon-to-horizon) image, as viewed from orbital altitudes.

The scenes generated in the MEP are projected onto a spherical rear projection screen which functions as the image input to the respective infinite image system (IIS), or scanning telescope optics system. A separate MEP is used for each window and for the telescope. The MEP for the telescope is identical to the window MEPs in all areas, except where specifically stated otherwise.

The earth scenes are obtained from film images centered on the nadir for orbital scenes, or on the center of the moon or parachute for discrete scenes. Nadir is that point on earth directly below the spacecraft.

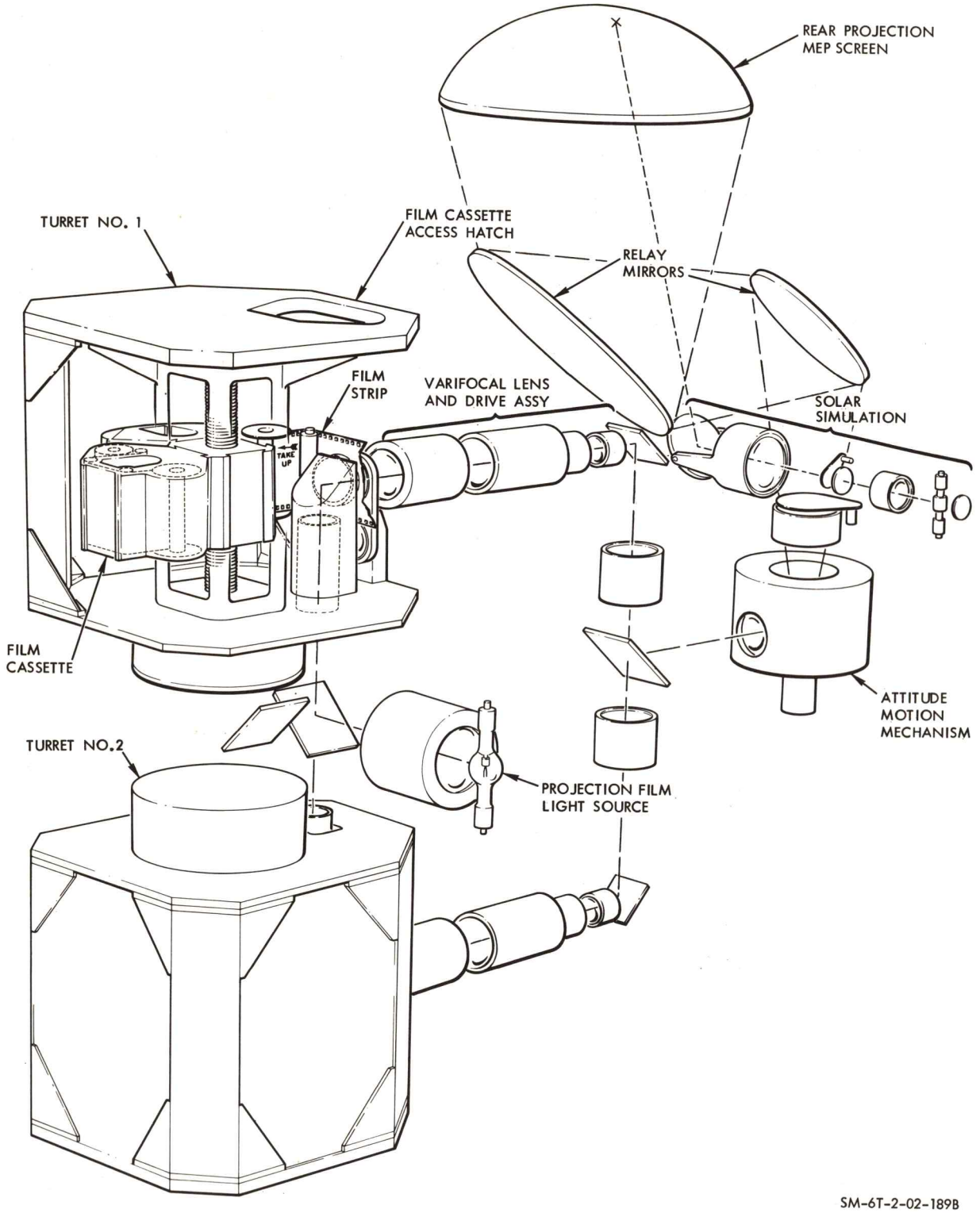

Figure 2-14. MEP Simplified Diagram

The scene that is generated within the MEP represents the complete image of the earth from limb to limb, and as generated, is independent of C/M attitude. The scene is generated as a function of SCM nadir position, SCM altitude, and sun position relative to the C/M. The generation is the same for all five MEPs. The orientation of this generated image (on the screen) by the scanning assembly is unique for each window and the telescope, in accordance with the direction of the optical axis of the viewing infinite image system or SCT optical system relative to the line to the nadir.

2.5.1.1 Orbital Scenes.

The image of the earth is generated from two separate films: one representing the specific earth image of the central 90-degree field of view centered on the nadir; the second film represents the peripheral (transboundary) area. The transboundary film provides a simulated cloud cover image extending from the line where the transboundary area merges with the central area (at 45 degrees from the nadir) out to the limb of the earth. The central area image is provided by a strip film representing a continuous band (or map) around the earth. Figure 2-15 illustrates a typical section of this film.

When the simulated altitude is low enough so the total MEP image represents more than the 90-degree field of view, the scene will be in the field of view and the peripheral area image will be blanked out. The peripheral area image will also be blanked out of distant moon scenes and parachute displays.

The central area image generation path is provided in duplicate so that two films can be positioned for viewing at the same time. This permits transfer from an earth scene to a moon or parachute scene within one second as required by the line of sight of a specific window.

If the limb-to-limb scene to be generated is less than 90 degrees as viewed from the spacecraft's simulated altitude, the peripheral area cloud scene is added to the central area by a ring mirror assembly. A combined aerial image is formed at the day-night image plane. At this plane, the image is projected through the day-night terminator. The terminator is a servo-driven film section with alternate light and dark areas. The resultant image output from the terminator represents day or night scenes as required by the mission.

Variations in altitude are simulated by operation of varifocal assemblies that change magnification between the films and day-night image plane. A similar function is approximated for the peripheral area cloud films. In addition, the peripheral area image generation path controls the diameter of the earth limb by another varifocal lens assembly. This completes the image generation portion of the MEP.

The MEPs used for window image generation each contain a separate sun image generator. The sun image projector projects a bright spot, which represents the sun, onto the respective MEP screen. The position of this spot is servo controlled so that SCM attitude changes can be simulated.

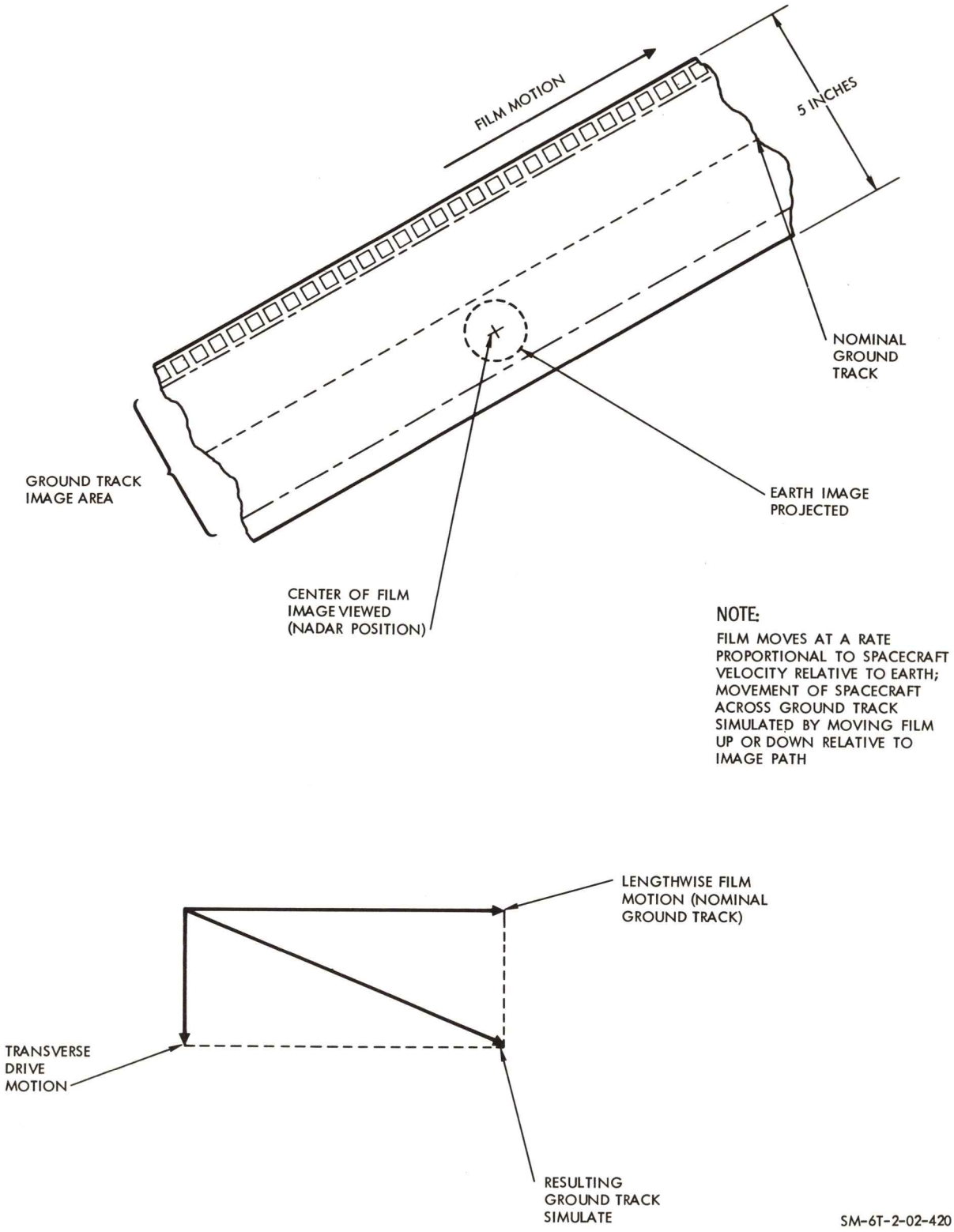

Figure 2-15. MEP Central Image Film

The central area portion of the orbital scene is developed from film strip sections, each representing a 1000-n-mi wide strip around the earth covering 360 degrees longitude. This allows the film to be positioned in the film gate in accordance with the equations of motion, which define the SCM position. The film sections are spliced together to provide nine orbits on the first film and orbits 10 through 16, plus orbit 1 on the second film. By computer control of the films, an unlimited number of revolutions is provided. The peripheral area film is returned to its initial point after each day-night transition so that it also provides for unlimited revolutions.

2.5.1.2 Boost Scenes.

After launch escape tower jettison in the simulated launch boost, the MEPs will provide views at 100-n-mi altitude to both the rendezvous and docking windows and the landing windows. The telescope will not be operational during the boost scene since the astro-sextant doors will be closed. The orbital film of each MEP will be driven to the point corresponding to the launch site as part of the AMS initialization process. After launch, it will be driven to correspond to the nadir position of the command module. Since earth scenes will not be visible from the C/M during ascent due to the required vehicle attitude, this error in simulated altitude will not be visible.

This 100-n-mi altitude is maintained in the MEPs until the simulated altitude actually reaches 100 n mi. Beyond this point, the actual simulated altitude will be depicted by all MEPs up to the maximum range of 215 n mi. Solid moving cloud cover film will be driven during launch, and the sun image projector will be functional in order to simulate sun shafting if command module orientation calls for it. These images become visible as the LES CM cover is jettisoned.

As part of initialization, the lunar image film will be driven to the correct image for the day of launch. The lunar image to be shown by the MEP is chosen by the computer, based on ephemeris data.

2.5.1.3 Entry Scenes.

During entry and landing maneuvers, an earth scene from the orbital film shall be presented in the landing and rendezvous and docking windows. This scene will include the earth, the solid cloud cover, and the horizon. The views available at the landing windows will be essentially the same as those for orbital flight simulation. However, the MEPs will not decrease altitude to less than 100 miles. Sun-shafting will continue until touchdown if C/M orientation calls for it.

When the signal for drogue chute deployment is received, the MEPs will shift from the orbital film to the portion of the midcourse cassette film containing drogue chute imagery. The solid cloud cover will be blanked out and the drogue chute image will be positioned in the window field of view as a function of spacecraft attitude. Upon receipt of the appropriate signals, the main chutes are displayed in the reefed configuration, followed by a display of them fully opened. The unfurling of the chutes will not be dynamically simulated.

The telescope will not be operational during re-entry since the astro-sextant doors will be closed.

2.5.1.4 Moon Scenes.

The MEP will provide window and telescope views of the moon. However, the moon will not be shown simultaneously with the earth in any one MEP. Simultaneous views of the moon and earth are possible in separate MEPs.

The moon scenes will consist of 30 independent images, each representing a daily change in the phase of the moon.

If an earth scene visible through any window should shift to more than 5 degrees outside that window's field of view, or if the earth is dark because the spacecraft is located on the night side and the window line of sight to the moon is within the field of view, the MEP projection for that window shifts from the orbital film to the moon scene. If the moon scene is being projected and a sunlit earth limb comes into the field of view, the projector shifts to provide the earth scene. Only a small interruption of the visual scene will be experienced.

For the telescope display, if the earth is being displayed and the visible portion of the scene (out to the limb) decreases to less than 25 degrees of the field of view, the moon scene will be switched in. If the lunar scene is being projected and the earth comes into view up to 30 degrees of the 60 degree field of view, the projection will be shifted to provide the earth scene. These figures were chosen because earth landmarks can be tracked up to a maximum angle off nadir of 35 degrees; at 215 miles altitude, approximately the last 25 degrees of the earth limb is presented as solid cloud cover. Thus, the earth scene will not disappear until the last earth detail has disappeared under the solid cloud cover. On the other hand, if lunar sightings are being made, the moon can be tracked with the telescope until it is just tangent to the earth.

The image positioned in the film gate is determined by ephemeris data. Window line of sight, obtained from the starfield display system together with line of sight to the moon, are used to determine the angle between the moon and the window line of sight. The solid moving cloud cover is blanked off during moon display.

2.5.1.5 Infinity Image System.

The mission effects projector, the celestial image generator, and the rendezvous image display unit all feed their visual outputs to the infinity image system (IIS) where they are combined to furnish an accurate composite display at the respective SCM window or telescope optics. One of the five IISs is pictured in figure 2-16. The concave mirrors lend the illusion that the visual images transmitted to the SCM are an infinite distance from the windows. The distance between the rendezvous and docking simulator CRT and the reflecting mirror and focusing mirror is decreased as the simulated target range decreases from 150 feet.

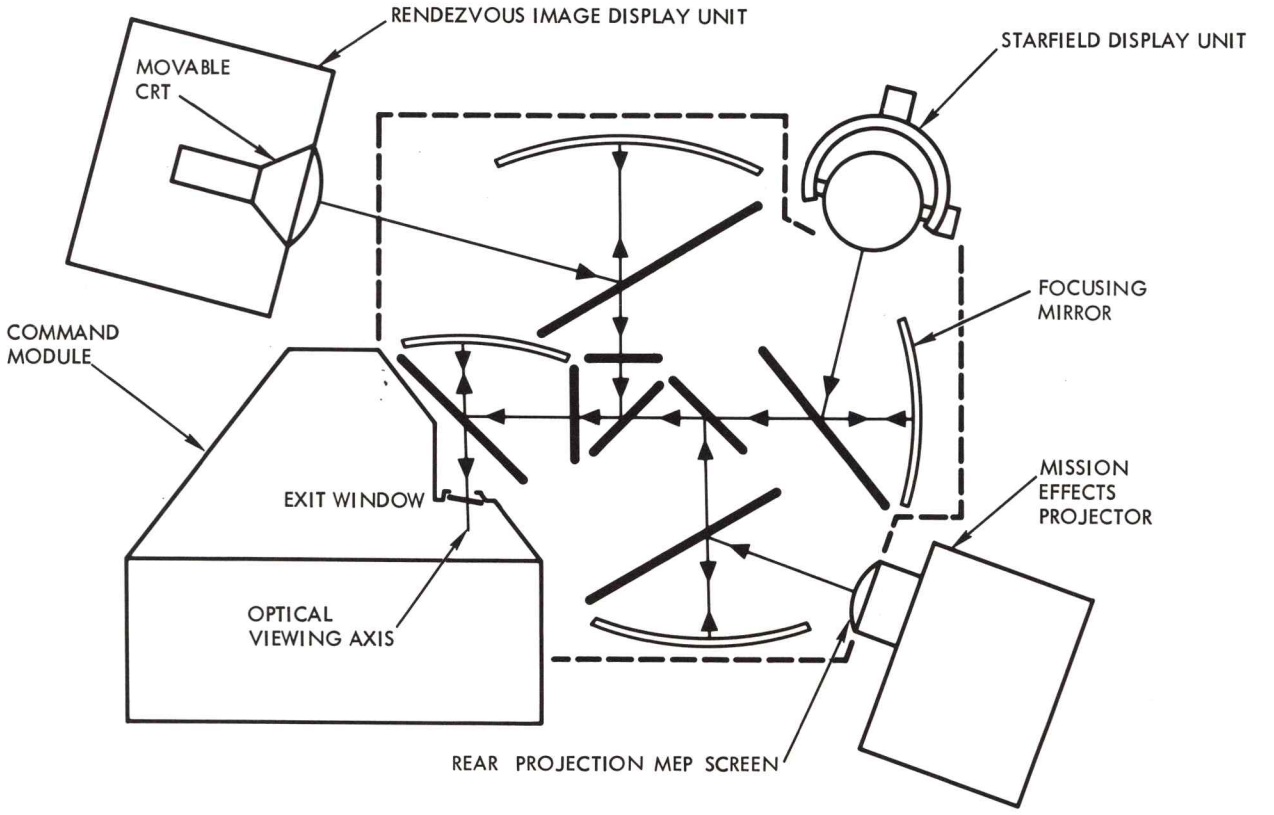

Figure 2-16. Infinity Image System

2.5.2 SOLAR EFFECTS SIMULATION.

The sun-shafting assembly provides simulation of sun effects to the MEP screen. Although a sun-shafting assembly is physically packaged within each of the window MEPs, it is not a part of, and does not interface with, the central image generation assembly or the transboundary assembly. The sun-shafting assembly output is projected directly and independently onto the MEP output screen.

The sun-shafting simulation is included in the AMS to familiarize crew members with problems in spacecraft operation resulting from poor visibility due to direct or reflected sunlight. The simulated sun is of sufficient brilliance to cause momentary blindness (approximately 5 seconds) if viewed directly.

The major components of the sun-shafting assembly include a high intensity lamp, a projection lens, and a scanning mirror mounted in a gimbal assembly providing two degrees of freedom (pitch and yaw). Operation of the scanning mirror is similar to that described for the scanning mirror in the central image generation. However, roll motion is not simulated since the sun is symmetrical.

The sun image at a given window consists of the projection of a fixed diameter pinhole source of high intensity light on the rear projection screen of the MEP associated with a given window. The image diameter on the screen is 32 arc minutes ±10 percent.

Because the distance from the light source to different points on the rear projection screen varies slightly, the projection of the light source must be kept in focus as it scans across the screen. This is accomplished by displacing the projection lens. A solar blanking shutter is provided to avoid reflections of the strong light when the displayed sun image is outside the field of view.

Occultation of the sun occurs whenever it would appear behind any of the objects visible out the window (i.e., earth, moon, LEM). A rotary, controlled shutter, operating in conjunction with computer signals, is used to control sunlight and its occultation. The position of the sun image is controlled by inputs from the ephemeris and the vehicle attitude from the equations of motion.

2.5.3 STARFIELD DISPLAY.

The starfield display provides a stellar background for the scenes viewed from the SCM windows and telescope. The starfield makes possible the recognition of various constellations or stars for use as navigational aids. The display provides 997 stars in true relative position and in relative brightness to the nearest magnitude from -1 to +5. When the earth or moon appears in the line of sight to the starfield, those stars that are behind the earth or moon are blanked out by an occultation unit.

The starfield display contains a celestial sphere mounted in a 3-axis gimbal system, the illumination unit, and earth occultation unit. A second occultation unit is provided for the docking windows. This unit is used to prevent stars from appearing through the docking vehicle.

The optical projection of the infinity image system and the mounting of the celestial sphere are so designed that the roll axis is aligned with the window line of sight. The projection at the SCM windows appears as it would if the observer were placed at the center of the sphere looking outward along the roll axis. The celestial sphere contains 997 simulated stars of various magnitudes. Stars are simulated by various sized stainless steel balls imbedded in the surface of the sphere. These balls range in size from 1/32 inch to 3/8 inch. By illuminating the sphere with an externally located point source of light, the brightness magnitude of the various stars is simulated by the size of the ball. Certain simulated stars have been gold plated to more faithfully reproduce the true color of the actual star.

To properly position the starfield globe, it is necessary to find the direction of the line of sight from each window and through the telescope. This determines which point on the celestial sphere is to be directly in front of the viewer. The orientation of the celestial sphere about the line of sight is determined by the simulated vehicle attitude with respect to the I_E frame, and the position of each window and the sextant/telescope with respect to the S/C body axes. A signal flow diagram showing generation of the celestial sphere drive signals is illustrated in figure 2-17. Direction cosines representing the angular relationship between the spacecraft body (B) frame and the earth-centered inertial reference (I_E) frame are received from the equations of motion. These direction cosines are then converted from the I_E frame to the ecliptic reference frame by changing the Y and Z axes 23.5 degrees (the angle between the earth's equator and the solar orbit of the earth). The attitude of each window and the telescope optics in the ecliptic frame are computed on the basis of the SCM attitude, the I_E-to-ecliptic frame conversion, and the location of each window in the vehicle. The sine and cosine of the window-to-ecliptic frame angles are the driving signals for the celestial spheres.

2.5.3.1 Occultation Mask.

The source of illumination for the celestial display is a 500-watt, high-pressure mercury arc lamp. The light source, which is essentially a point source, is relayed to a focal plane near the surface of the first celestial sphere beamsplitter. Within the relay optics, there is a collimated section where the earth occultation disc is placed. In the rendezvous and docking windows there is a second collimated light section where the LEM occulting disc and an additional intermediate focal plane are located.

The relay system is so designed that the occulting disc places a shadow on the celestial sphere, providing a sharp image of the disc even when it is off the viewing axis. The necessary angular mapping distortion required to project a circle onto the celestial sphere from an off-axis position is also incorporated in the relay optics.

The complete celestial display system is packaged in three sections: the celestial sphere, the illuminator, and the servoelectronics chassis. The sphere and illuminator are mounted on the structural frame of the infinity imaging system. The electronics portion is located in the electronic equipment cabinet associated with each window.

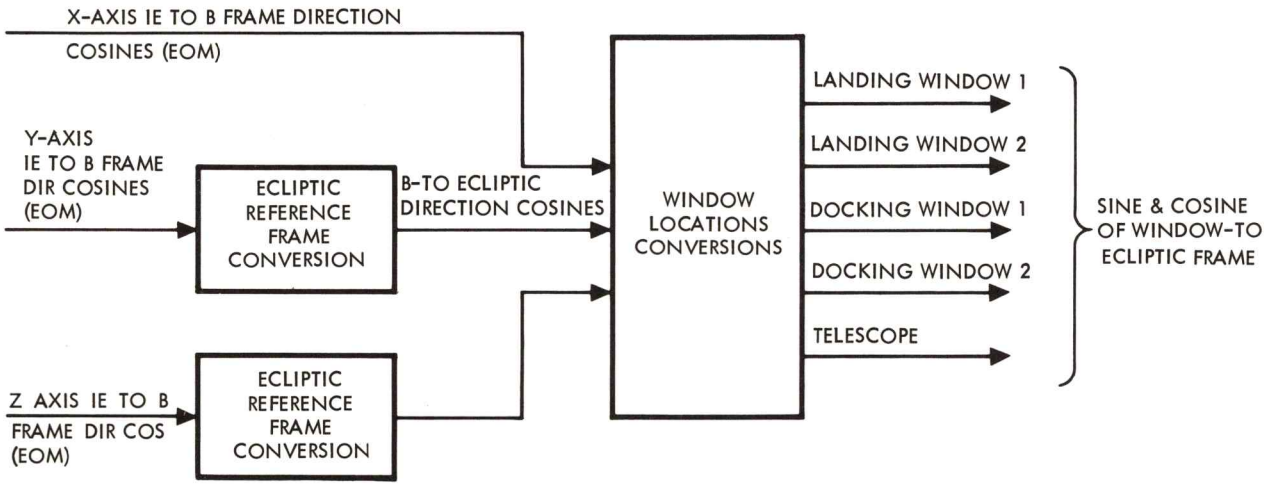

Figure 2-17. Celestial Sphere Drive

An occultation mask is provided for each window and the scanning telescope optics to furnish earth occultation.

The occultation mask consists of mylar tape wound onto a bobbin. The bobbin is located in the path of collimated light in the starfield illumination optics with its axis parallel to the optical axis. The bobbin can either take on film to simulate a decrease in altitude, or let off film to simulate an increase in altitude. The amount of mylar tape on the occultation unit spool represents the circular cross section of the earth as it would appear when viewed from the spacecraft at a corresponding altitude. The relationship of the occultation mask with respect to its celestial sphere is shown in figure 2-18.

The occultation system has associated with it three servo systems, referred to as the X-axis, Y-axis, and Z-axis servos. The X-axis servo controls the linear displacement of the occultation mask normal to the optical axis and in a vertical direction referenced to the window. The Y-axis servo is similar to the X-axis, except its motion is in the horizontal direction. The Z-axis servo is an angular drive which controls winding of the mylar tape, thus changing the diameter of the disc and, consequently, the shadowed area on the celestial sphere.

The LEM and earth occulting mechanisms are essentially identical. The only area of difference is in limiting sizes of the subtended area, being 6 degrees to 87 degrees for LEM occultation and 6 degrees to 168 degrees for earth occultation.

Since the diameter of the earth as viewed from different windows and from the scanning telescope is the same, a single signal is used to drive the Z-axis servos for the five earth occultation masks. Figure 2-19 is a block diagram of the occultation mask drive generation. Also included in this diagram are the fast drive computations.

2.5.4 SCANNING TELESCOPE AND SEXTANT VISUALS.

The scanning telescope and sextant visuals simulation includes perceptual images as seen through these units and hardware components located in the SCM lower equipment bay. The composite assembly of sextant/telescope optics and image input assemblies is mounted on a rigid boom suspended from the overhead catwalk. This allows the SCM to be lowered away from it and traverse beneath it.

2.5.4.1 Scanning Telescope Simulation.

The simulated telescope consists of a reticle arrangement along with a fixed optical system which permits simultaneous viewing of the starfield and the MEP. Figure 2-20 illustrates the optics used in simulating the spacecraft telescope. The telescope view-field motion resulting from telescope trunnion operation or spacecraft attitude changes is simulated by moving the images. Sun blinding is not incorporated in the telescope simulation, but an indication of a line-of-sight approach to the sun's position is provided by lighting within the telescope optics.

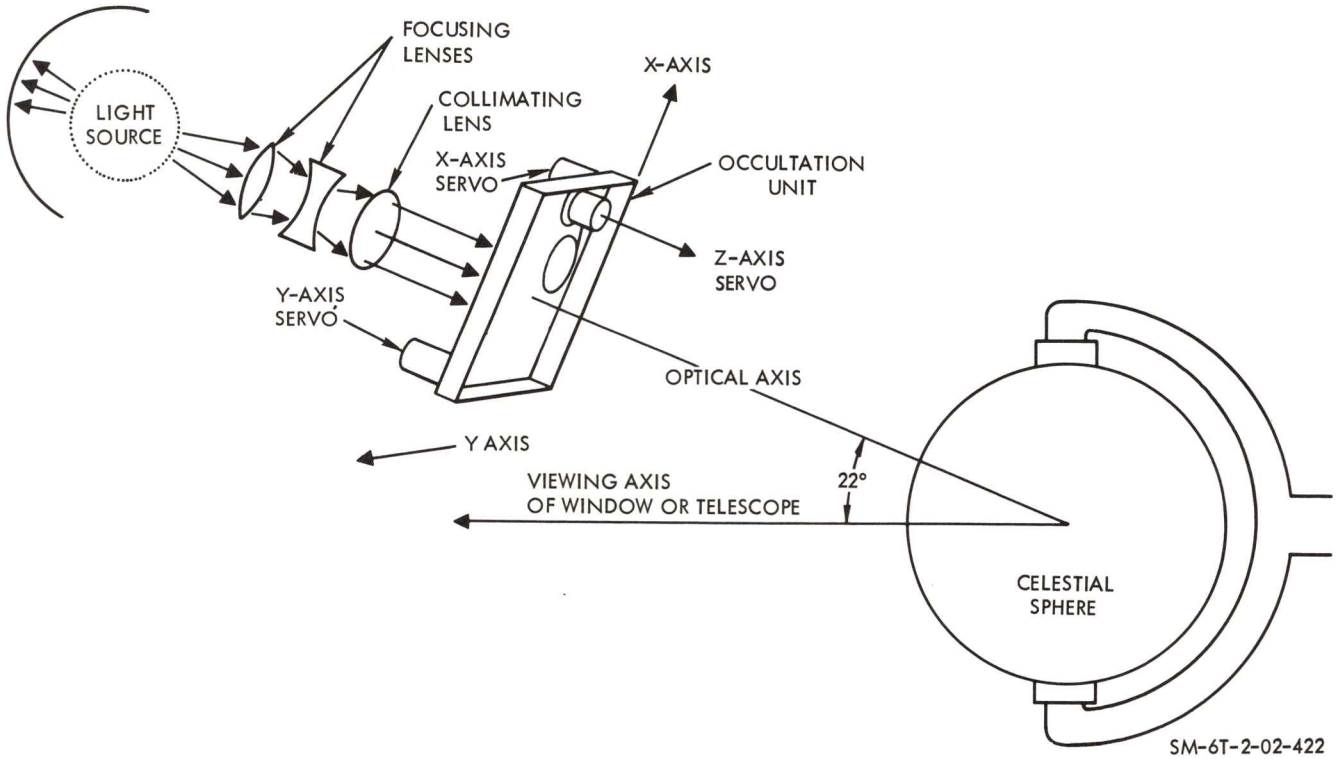

Figure 2-18. Occultation Unit/Celestial Sphere

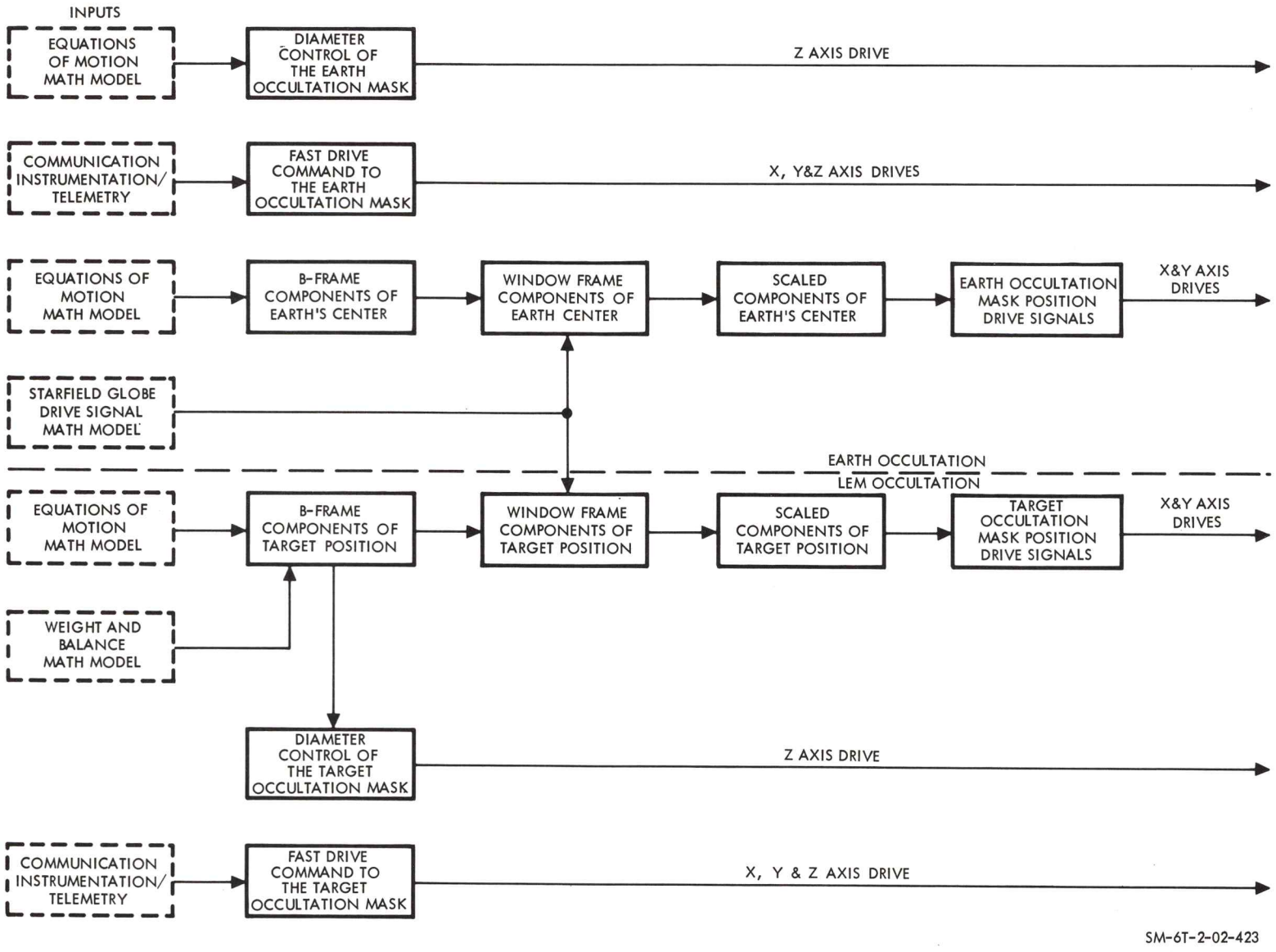

Figure 2-19. Occultation Mask Drive Generation

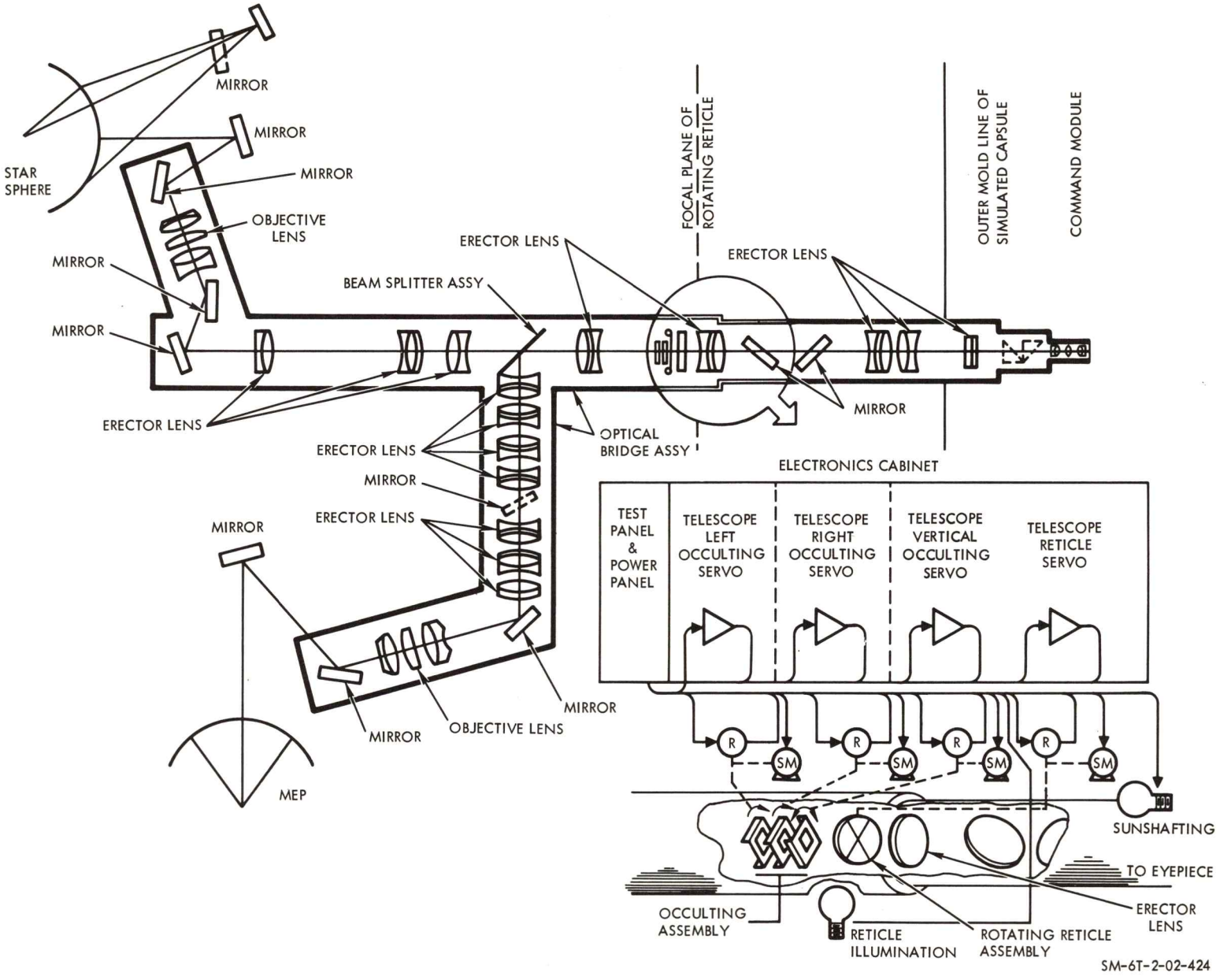

Figure 2-20. Telescope Functional Diagram

Landmark and starfield scenes for telescope viewing are provided through the telescope MEP in much the same manner as the window displays. The position of the telescope optics in the spacecraft limits the telescope view at extreme trunnion angles. This limitation is simulated by occultation blades controlled from the computer program as shown in figure 2-21.

The simulated telescope shaft and trunnion axis measurements are provided by the sextant/telescope program to the image generation equipment. The mechanical accuracy of the simulated telescope is dependent upon optical alignment, reticle-shaft axis alignment, and the alignment of these to the starfield and MEP. The total displacement of telescope scenes due to these mechanical errors is ±4 arc minutes.

2.5.4.2 Sextant Simulation.

Visual simulation of the sextant is controlled by the sextant/telescope program using real-time vehicle dynamics. Signals from the program control scene movement, scene selection, shaft readouts, lighting control for sun reflection, and image centering for the simulated sextant optics. Sextant optics simulation commences when the astro-sextant doors are opened. Figure 2-22 illustrates the sextant optics simulation and associated controls. To permit angular measurements with a degree of accuracy commensurate with the requirements of navigation sighting or IMU alignment, overall repeatability of sextant measurements for star sightings is ±7 arc seconds, and star to landmark is ±15 arc seconds. These figures include all factors due to image resolution, positioning, and degradation caused by time, maintenance, etc. Reticle positioning accuracy within the sextant is the same as that for the telescope, 0.5 degree. Image motion rates for the sextant are 0.7 degree per second, maximum, and 3.0 arc seconds per second, minimum. These allow the simulated sextant motions to be compatible with S/C minimum impulse rates.

Since specific landmark images are not observed through the sextant until they are clearly identified and located by the telescope, only fixed images contained on a slide encompassing a 4-degree solid angle are used in the simulation. Slide selection of appropriate landmark images occurs whenever the telescope line of sight falls within the center 2.2 degrees of any fixed landmark image plate; otherwise, no scene is available to the sextant. Image plate selection is performed by the sextant/telescope program when optics are aligned to within 2 degrees of the center of an available slide. The slides are positioned so that the sextant and telescope lines of sight correspond. Flight crew control commands are processed by the computer to modify image position so that proper landmark image alignment occurs during SCM attitude changes or changes in trunnion angle. This is accomplished in the optics system by rhomboid scanners for both landmarks and starfield views. Landmark scenes (slides) are restricted to a plane located within 30 degrees of the nadir. These slides will contain specific unobscured landmarks containing moon and earth phase lighting effects. In all, a total of 90 slide images are available for sextant usage during earth and moon landmark sightings.

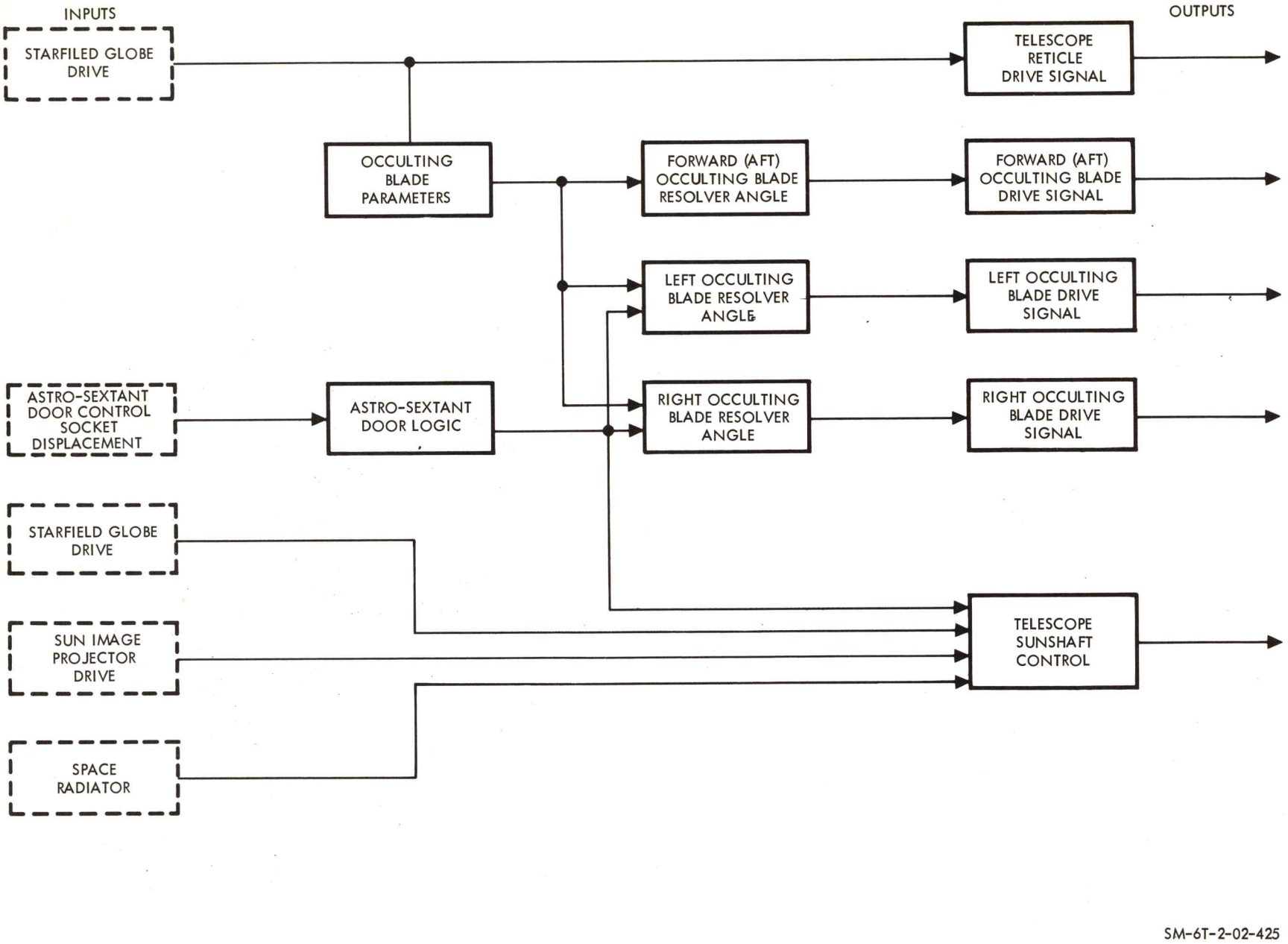

Figure 2-21. Telescope Optic Drive Generation Flow Diagram

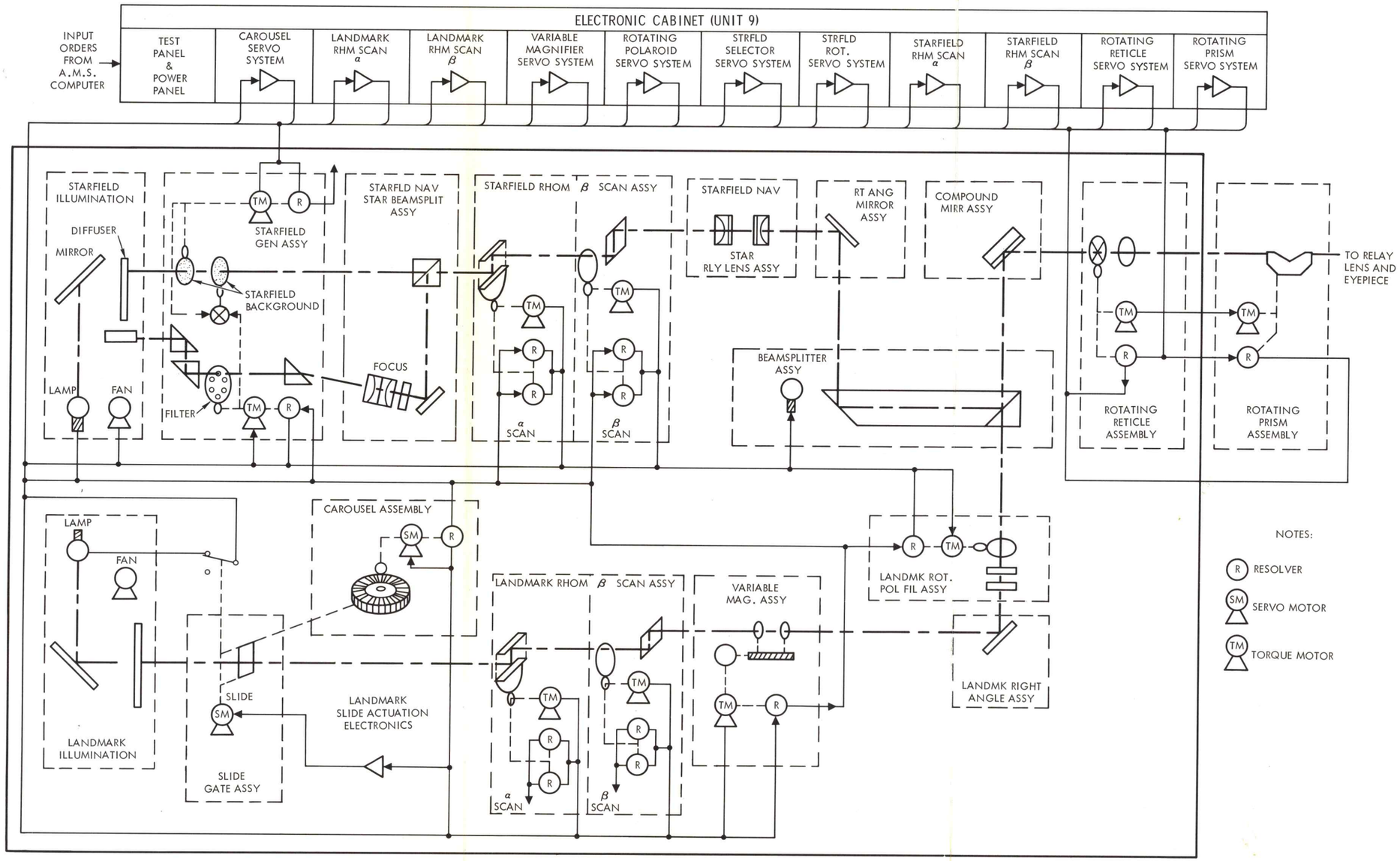

Figure 2-22. AMS Sextant Functional Diagram

Star scenes for the sextant are developed by a navigational star generator. This generator uses a single output through a variable-density filter and focusing network to produce the appropriate navigational star of the proper magnitude. Associated celestial star backgrounds are developed by a starfield pattern generator. This generator operates by rotating two opaque discs in different directions. These discs have holes in them which, at certain positions, align and allow light to pass through, forming the various starfield backgrounds required for navigation stars. The positions of these discs are determined by the sextant/telescope program. The two scenes are then combined via a beam splitter and presented to the simulated sextant variable line-of-sight optics. There are 28 different navigation stars available in the AMS through the sextant starfield generator.

Control of the sextant optics simulation is maintained by the sextant/telescope program as shown in figure 2-23.

2.5.5 RENDEZVOUS IMAGE GENERATION SYSTEM.

The rendezvous image generation system allows simulation of CSM transposition and docking with the S-IVB. It provides visual simulation of the S-IVB with the LEM adapter panels deployed using a model, relative motion simulation, and two TV camera and display systems. The rendezvous image will be visible only in the two SCM docking windows. Figure 2-24 illustrates the rendezvous image generation system. When viewed from the SCM via the infinity image system, the S-IVB will appear to have the proper attitude, illumination, and size relative to the field of view from each of the docking windows. Movement of the model in its three-gimbal system simulates the three axes of rotational motion of the spacecraft with respect to the S-IVB. Relative translational motion between the spacecraft and the S-IVB is simulated by pitching or yawing the TV cameras to simulate Y and Z body axis translation. During Y- or Z-axis translation, the S-IVB model moves through the same angle as do the TV cameras. This gives the illusion of translational movement without any rotation. X-axis translation is simulated by movement of the TV cameras along the camera carriage rails. The camera carriage has 86.92 inches of travel available which corresponds to approximately 150 feet at the scale of 20 to 1. When the simulated distance between the spacecraft and the S-IVB exceeds 150 feet, the window image is made smaller by reducing the roster size on the display CRTs.

The IIS causes visual images to appear at infinity; however, the docking model will appear to be at infinity only at distances greater than 150 feet. For accurate simulation of ranges less than 150 feet, the rendezvous image generator must cause the focal point of the viewer's eyes to change as the simulated range varies. This is accomplished by physically moving the docking window CRTs forward as the S-IVB range decreases. Using this method, focal distances as close as 64 inches may be simulated. The CRTs have a maximum travel of 5 inches; but, due to the focusing mirrors, this 5-inch movement will change the focal distance from 150 feet down to 64 inches.

In order to maintain proper clarity of the model image at the docking window, focusing lenses on the TV cameras are mechanically adjusted as the camera carriage moves within its limits. To simulate the S-IVB in a docked

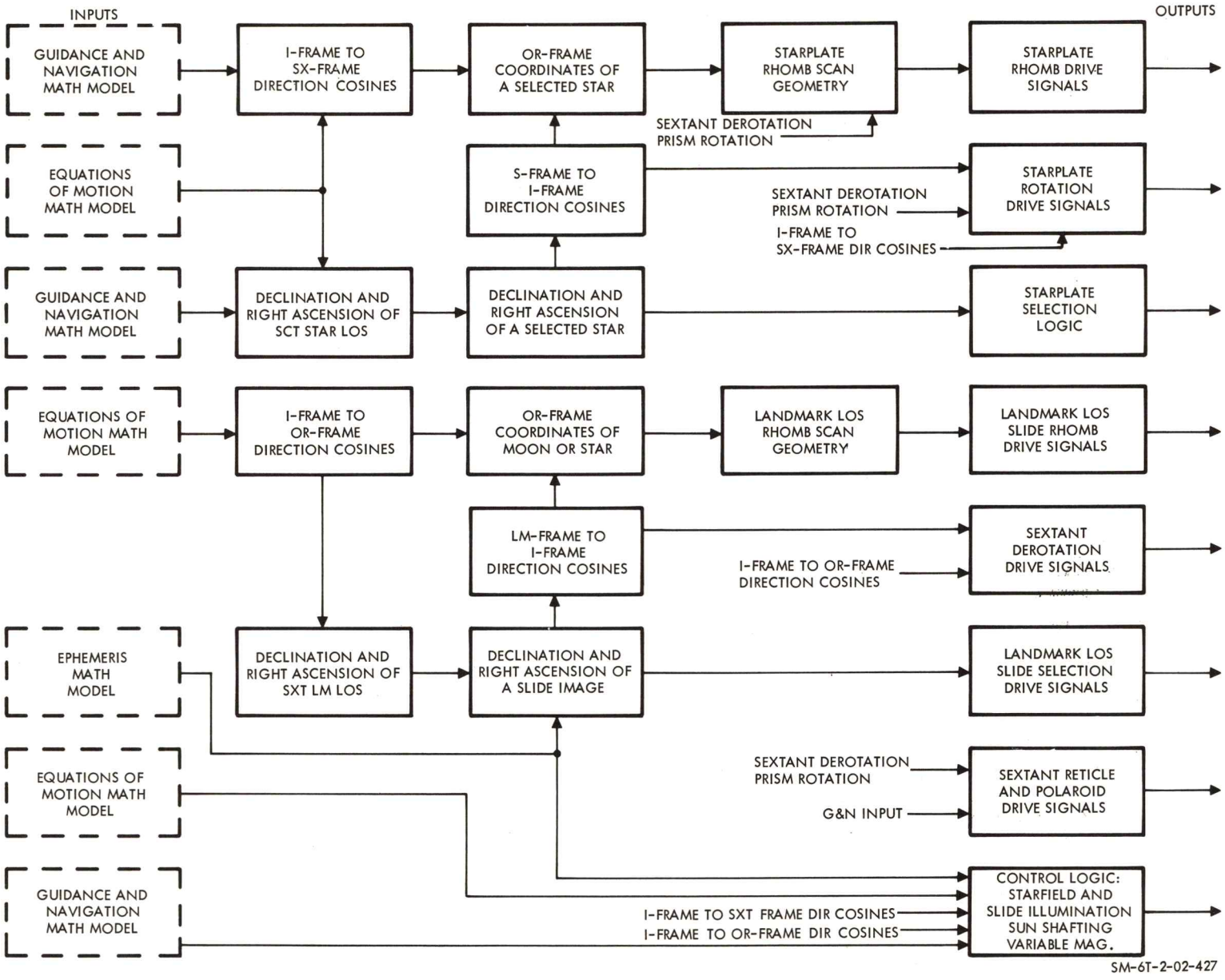

Figure 2-23. Simulated Sextant Drive Flow Diagram

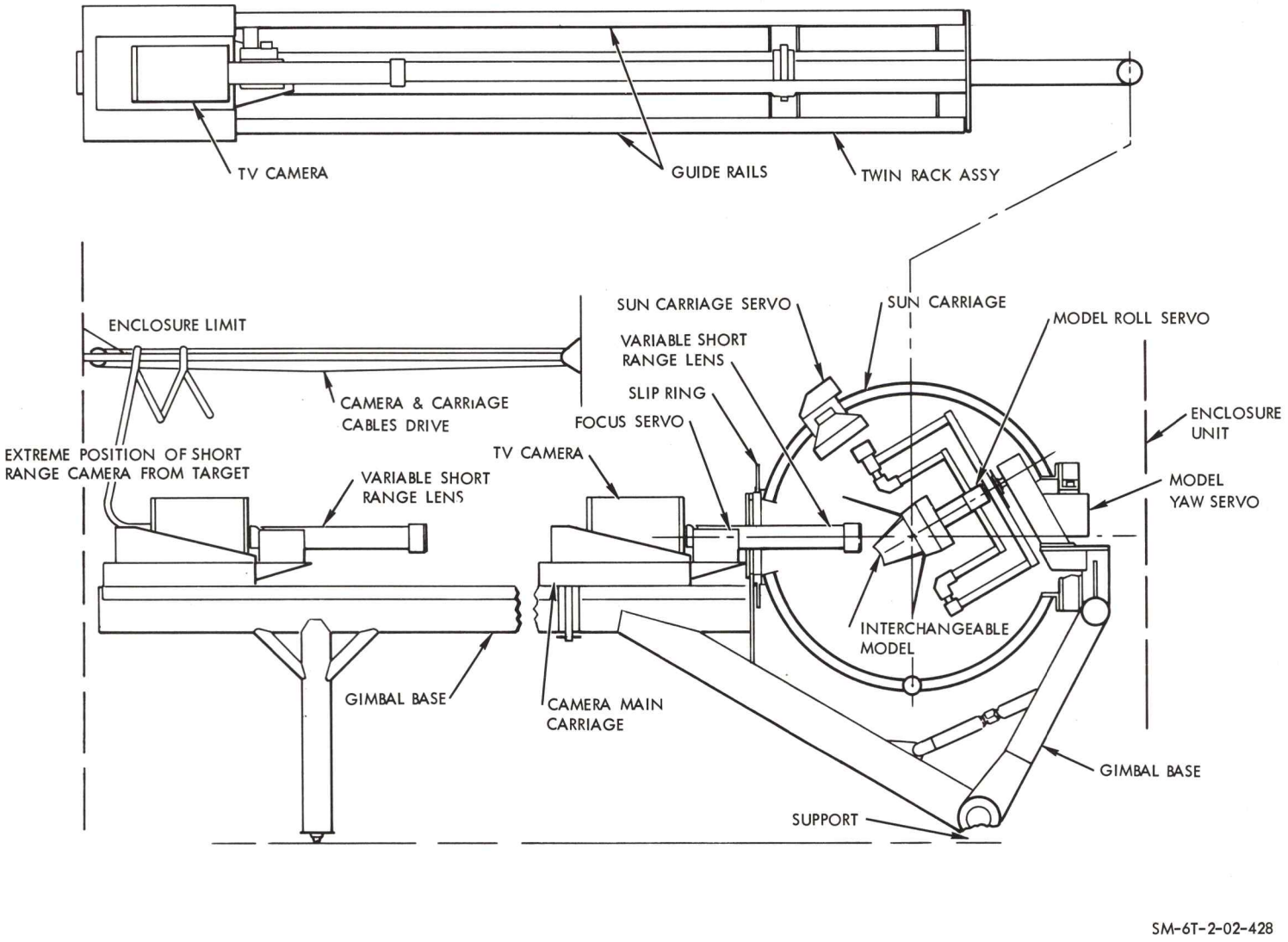

Figure 2-24. Rendezvous Image Model Complex

position, a 35 mm slide projector and TV camera are provided for each docking window. The displayed image is scaled to correspond to the actual window scene of the docked S-IVB (approximately 5 feet). When simulation of separation is desired, the slide viewing camera output is removed and replaced by the model viewing camera output into the video preamplifier.

Model illumination consists of two high intensity lamps representing the sun and four lamps representing reflected earth light. The two high-intensity sun lamps are mounted in a two-degree-of-freedom gimbal system. The system uses one gimbal whose center of rotation is the direct line of sight along the camera rails. The second degree of freedom of the simulated sun is obtained by mounting the sun lamps on a carriage which translates around an arc of the gimbal. This allows realistic simulation of the sun's position relative to the model and spacecraft. Translation and rotation of the sun lamps are limited as shown in figure 2-25, and controlled by inputs from the equations of motion and ephemeris. Because of the length of time required to bring these lamps to maximum light level (6 to 8 minutes), they are programed on approximately 8 minutes before viewing of the model under simulated sunlight is required. Because of the limitation in the sun's translational servo travel, rendezvous simulation with the sun directly in front of or behind the C/M is not possible.

The beams of the sun lamps overlap and provide an extremely high intensity light pattern on the S-IVB model. The simulation of the sun by means of two lamps tends to blend the shadows to the extent that the model support arms do not cast distinguishable shadows if they interpose between the sun simulators and the target vehicle model. This permits the placement of the sun at any position between the observation port through which the camera lens views the model and 120 degrees from that point. The arm on which the sun is mounted is also free to move in a circular path around the line-of-sight axis. This axis is without limit, thereby providing full coverage of simulated sun position over a spherical segment about 120 degrees high. The sun's movement along these axes is controlled by the same signals as the sun-shafting simulator in the MEPs. The servo drive signals are brought in through slip rings mounted on the partition between the model and camera areas. The rendezvous and docking simulation is controlled by the visuals programs in the AMS, as shown in figure 2-26.

2.6 GUIDANCE AND CONTROL (G&N) SYSTEM.

2.6.1 G&N SYSTEM CONFIGURATION REFERENCE.

The G&N system simulated in the AMS closely approximates the G&N system proposed for SC 012 at the time of the AMS data freeze. Changes in SC 012 AGC design since that time have left the variations between SC 012 and AMS major modes listed in table 2-2.

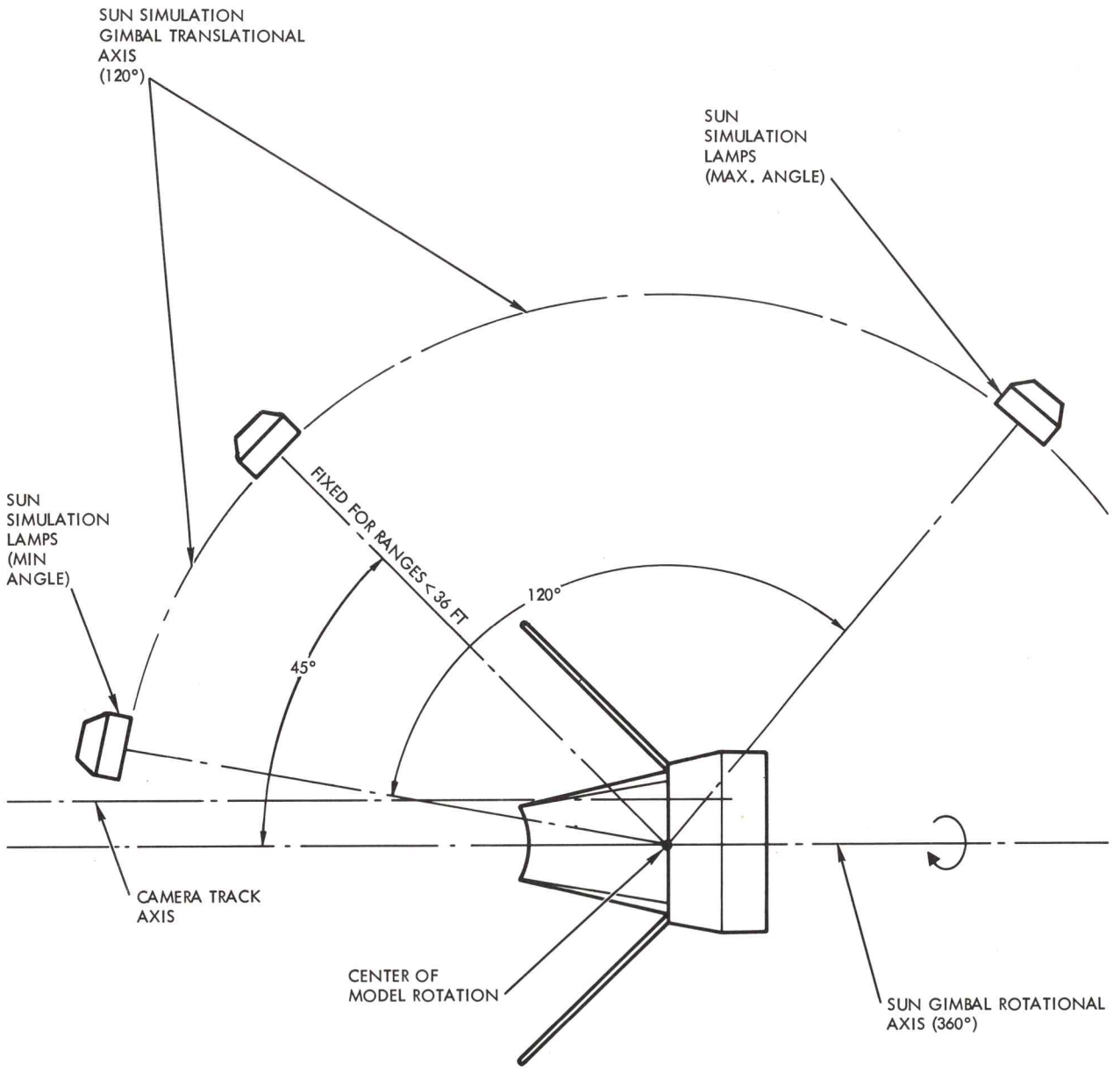

FOR SIMULATED RANGES GREATER THAN 36 FEET, LAMPS MAY TRANSVERSE FROM 10° FROM CAMERA TRACK TO 130° FROM CAMERA TRACK AS SHOWN ABOVE,

FOR SIMULATED RANGES OF LESS THAN 36 FEET, LAMPS ARE STATIONARY AT 45°

SM-6T-2-02-429

Figure 2-25. Rendezvous Sun Lighting Simulation

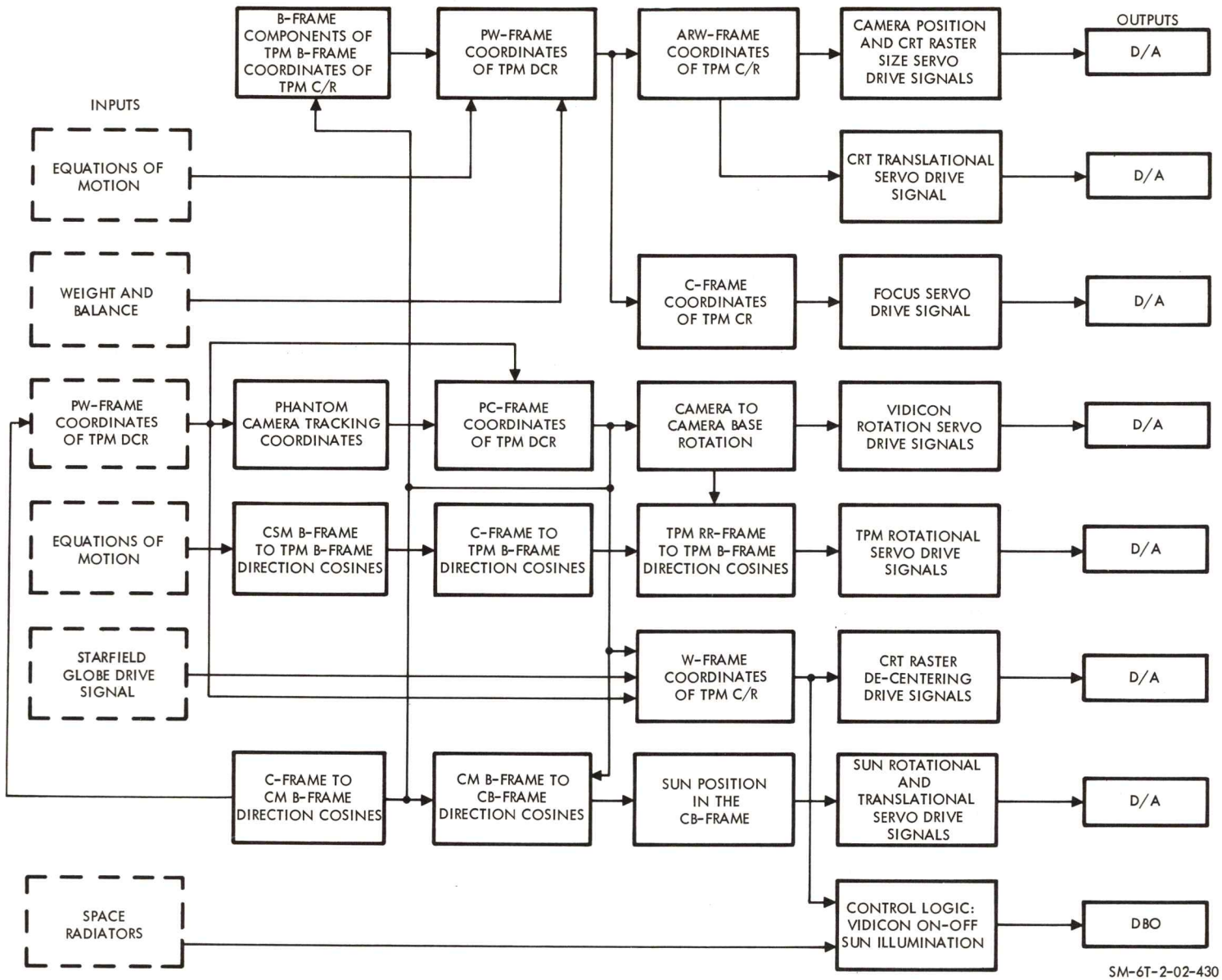

Figure 2-26. Rendezvous Image Generation Drive Flow Diagram

Table 2-2. Major Mode Differences

Mode No.	AMS	SC 012
00	No difference	
01	None	G&N Start-up and checkout
02	Gyrocompassing	Initialization
03	None	Gyrocompassing
04	Inertial reference	Optical verification of azimuth
05	None	Inertial reference
11, 12	No difference	
17	None	LET abort
21, 22, 23, 27, 31, 32	No difference	
33	None	SPS minimum impulse
41, 42	No difference	
43	None	SPS minimum impulse
46, 47, 51, 52, 53, 61, 62	No difference	
63	Post-0.05g phase	Initialization
64	None	Post-0.05g phase
65	Prefinal phase	Upcontrol
66	Final phase	Ballistic phase
67	None	Final phase
71, 72, 73	No difference	
74	Contingency orbit insertion	Contingency orbit insertion 1st burn
75	None	Contingency orbit insertion 2nd burn

In the other portions of the G&N simulation, there is no significant variation from the SC 012 G&N system operation.

Figures 2-27, 2-28 and 2-29 are diagrams of the actual SC 012 Inertial subsystem, AGC, and optical subsystem, respectively. Identified on these drawings are telemetry points and simulated malfunctions. These malfunctions are marked on the diagrams at the point where they will apparently be effective in the AMS simulation of the G&N.

2.6.2 G&N SYSTEM SIMULATION.

The G&N system consists of three subsystems as follows:

- Inertial subsystem (ISS)
- Apollo guidance computer (AGC) subsystem
- Optics subsystem (OSS).

A block diagram depicting the overall G&N system simulations is shown in figure 2-30.

2.6.3 ISS SIMULATION.

For the purpose of simulation, the ISS is divided into six sections as follows:

- Inertial measurement unit (IMU) simulation
- IMU mode switching simulation
- IMU coupling display unit (CDU) difference signals simulation
- Error warning simulation
- IMU temperature control simulation
- Inertial CDU drive signals simulation.

2.6.3.1 IMU Simulation.

Constants are established in the IMU program to simulate the IMU stable member. Once these constants are established, they form a reference frame from which all G&N navigation angles are derived. Drift rates and component failure effects are included in the computation of the stable member alignment. It is assumed in the computations that the stabilization loops are capable of maintaining the inertial orientation of this reference during all simulated changes in vehicle attitude, no matter what the rate of change is. The location of the S/C body axes with respect to the G&N stable member reference frame are described in the form of Euler angles. These Euler angles simulate the inner, middle, and outer gimbal angles in the IMU. The gimbal angles are changed in response to body axis rotational rate signals from the equations of motion (EOM). Position of the gimbals are computed continuously during an AMS run even when the G&N power-off condition is simulated. Figure 2-31 is a block diagram of the IMU simulation. Only the solid blocks are part of the IMU simulation.

The power-off conditions block determines the simulated gimbal angles when the ISS is in a standby condition. IMU mode switching determines when this standby condition exists. The operational conditions and malfunction effects block determines when the simulated IMU is operational and normal operation is possible. The effect of any G&N power failure on IMU operation is also calculated here.

The coarse align torquing block simulates torquing of the IMU gimbals during coarse alignment to the position registered in the inertial CDUs. The IMU mode switching logic provides these inertial CDU angles. The fine align

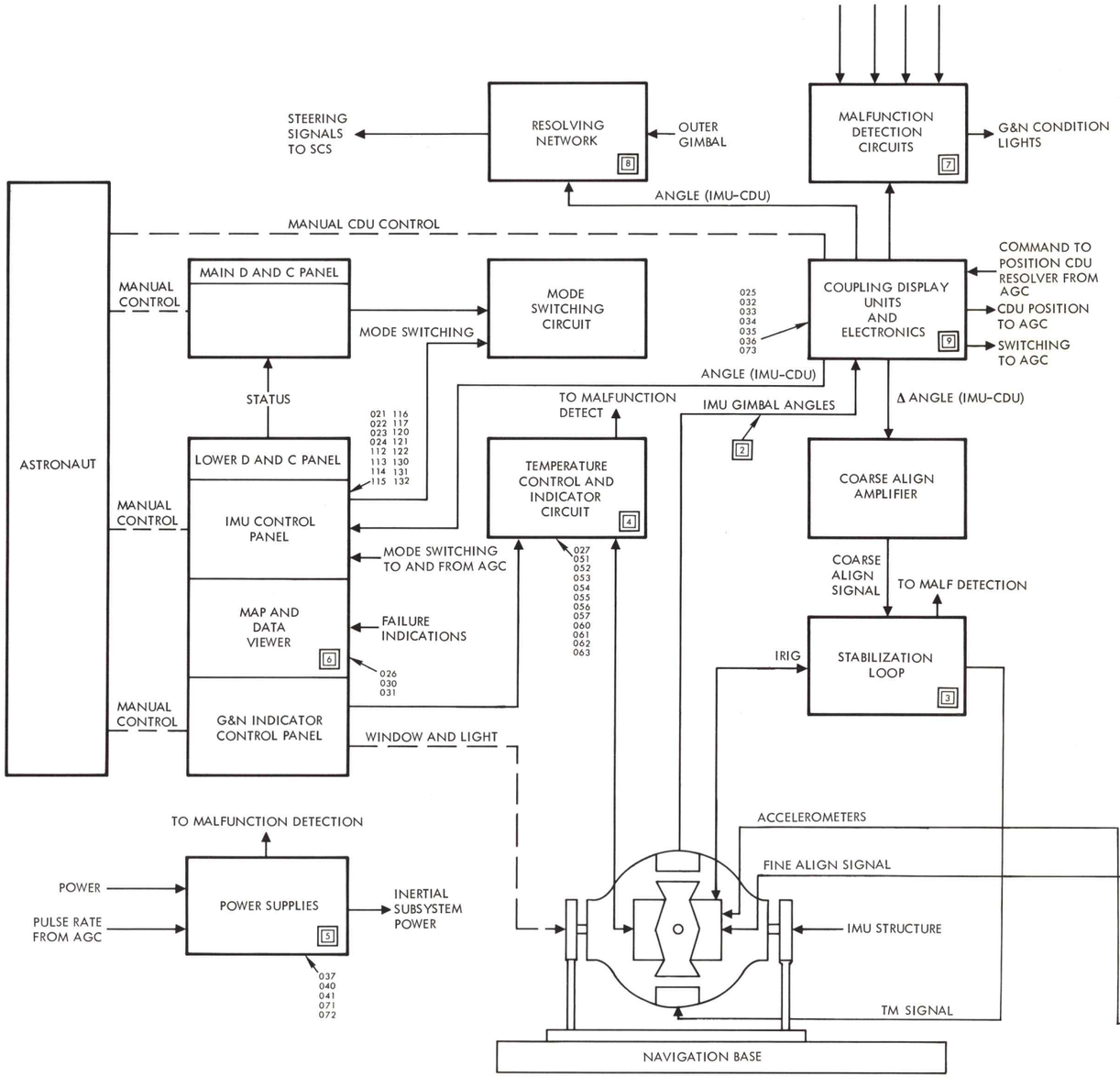

Figure 2-27. Inertial Subsystem

TELEMETRY POINTS		
NO	SIGNAL DESCRIPTION	T/M CODE
1	X AXIS PIPA SIGNAL GENERATOR OUTPUT	CG2001V
2	INNER GIMBAL ASSY 1X RESOLVER SINE OUTPUT	CG2112V
	INNER GIMBAL ASSY 1X RESOLVER COSINE OUTPUT	CG2113V
	MIDDLE GIMBAL ASSY 1X RESOLVER SINE OUTPUT	CG2142V
	MIDDLE GIMBAL ASSY 1X RESOLVER COSINE OUTPUT	CG2143V
	OUTER GIMBAL ASSY 1X RESOLVER SINE OUTPUT	CG2172V
	OUTER GIMBAL ASSY 1X RESOLVER COSINE OUTPUT	CG2173V
3	OUTER GIMBAL ASSY SERVO ERROR	CG2167V
	INNER GIMBAL ASSY TORQUE MOTOR INPUT	CG2110V
	MIDDLE GIMBAL ASSY TORQUE MOTOR INPUT	CG2140V
	OUTER GIMBAL ASSY TORQUE MOTOR INPUT	CG2170V
4	PIPA TEMPERATURE	CG2300T
	IRIG TEMPERATURE	CG2301T
	IMU HEATER CURRENT	CG2302C
	IMU BLOWER CURRENT	CG2303C
5	IMU +28 VDC OPERATE	CG1503X
	IMU +28 VDC STANDBY	CG1513X
6	IMU DELAY LIGHT	CG5007X
	IMU FAIL	CG5001X
	CDU FAIL	CG5002X
	GIMBAL LOCK WARNING	CG5003X
	IMU DELAY LIGHT	CG5008X
	IMU TEMPERATURE LIGHT	CG5006X
	COMPUTER POWER FAIL LIGHT	CG5030X
	PIPA FAIL	CG5000X
	ERROR DETECT	CG5005X
7	IMU PRESSURE LIGHT	CG5004X
8	POWER SERVO AMP TEMP 1	CG6020T
	POWER SERVO AMP TEMP 2	CG6021T
	POWER SERVO AMP TEMP 3	CG6022T
9	IGA CDU IX RES ERROR	CG2206V
	MGA CDU IX RES ERROR	CG2236V
	OGA CDU IX RES ERROR	CG2266V

INERTIAL SUBSYSTEM MALFUNCTIONS	
MALF. NO.	MALFUNCTION DESCRIPTION
GN-021	ZERO ENCODER LAMP FAILURE
GN-022	COARSE ALIGN MODE LAMP FAILURE
GN-023	CDU MANUAL MODE LAMP FAILURE
GN-024	ENTRY MODE LAMP FAILURE
GN-025	28 VDC FAILURE TO MANUAL MODE LATCHING RELAY
GN-026	IMU TEMPERATURE WARNING LIGHT POWER FAILURE
GN-027	IMU TEMPERATURE CONTROL RELAY FAILURE (OPEN)
GN-030	AGC PWR FAIL INDICATOR POWER FAILURE
GN-031	CDU FAIL LIGHT POWER FAILURE
GN-032	AGC ZERO ENCODER RELAY FAILURE
GN-033	AGC COARSE ALIGN RELAY FAILURE
GN-034	AGC FINE ALIGN RELAY FAILURE
GN-035	ATTITUDE CONTROL RELAY FAILURE
GN-036	AGC ENTRY RELAY FAILURE
GN-037	28V, 800 CPS 1% POWER FAILURE
GN-040	28V, 3200 CPS POWER FAILURE
GN-041	ENCODER EXCITATION (25.6 KC) FAILURE
GN-051	IMU BLOWER #1 FAILURE
GN-052	IMU BLOWER #2 FAILURE
GN-053	PIPA HEATER POWER FAILURE
GN-054	IMU CONTROL HEATER FAILURE
GN-055	IMU CONTROL HEATER CONTINUALLY ON
GN-056	IMU BACK-UP TEMPERATURE FAILURE
GN-057	IMU BACKUP TEMPERATURE CONTROL CONTINUALLY ON
GN-060	3200 CPS MAGNETIC AMPLIFIER EXCITATION FAILURE
GN-061	IMU TEMPERATURE ALARM FAILURE (K1)
GN-062	IMU TEMPERATURE ALARM (K2) FAILURE
GN-063	IMU TEMPERATURE (K2) FAILED CLOSED
GN-071	IMU 28V, 800 CPS 5% POWER SUPPLY FAILURE
GN-072	IMU 28V, 800 CPS GYRO WHEEL POWER FAILURE
GN-073	CDU ERROR SIGNAL GREATER THAN 5.4 VOLTS
GN-112	IMU CONTROL TRANSFER SWITCH FAILURE (IN COMPUTER POSITION)
GN-113	IMU CONTROL TRANSFER SWITCH FAILURE (IN MANUAL POSITION)
GN-114	CDU ROLL INC/DEC SWITCH FAILS OPEN IN INC POSITION
GN-115	CDU ROLL INC/DEC SWITCH FAILS OPEN IN DEC POSITION
GN-116	CDU PITCH INC/DEC SWITCH FAILS OPEN IN INC POSITION
GN-117	CDU PITCH INC/DEC SWITCH FAILS OPEN IN DEC POSITION
GN-120	CDU YAW INC/DEC SWITCH FAILS OPEN IN INC POSITION
GN-121	CDU YAW INC/DEC SWITCH FAILS OPEN IN DEC POSITION
GN-127	40 SECOND TIME DELAY; FAILS RELAY IN DEENERGIZED POSITION
GN-130	IMU-CDU DIFFERENCE INDICATOR FAILURE; OUTER GIMBAL POINTER FAILS AT ZERO
GN-131	IMU-CDU DIFFERENCE INDICATOR FAILURE; INNER GIMBAL POINTER FAILS AT ZERO
GN-132	IMU-CDU DIFFERENCE INDICATOR FAILURE; MIDDLE GIMBAL POINTER FAILS AT ZERO

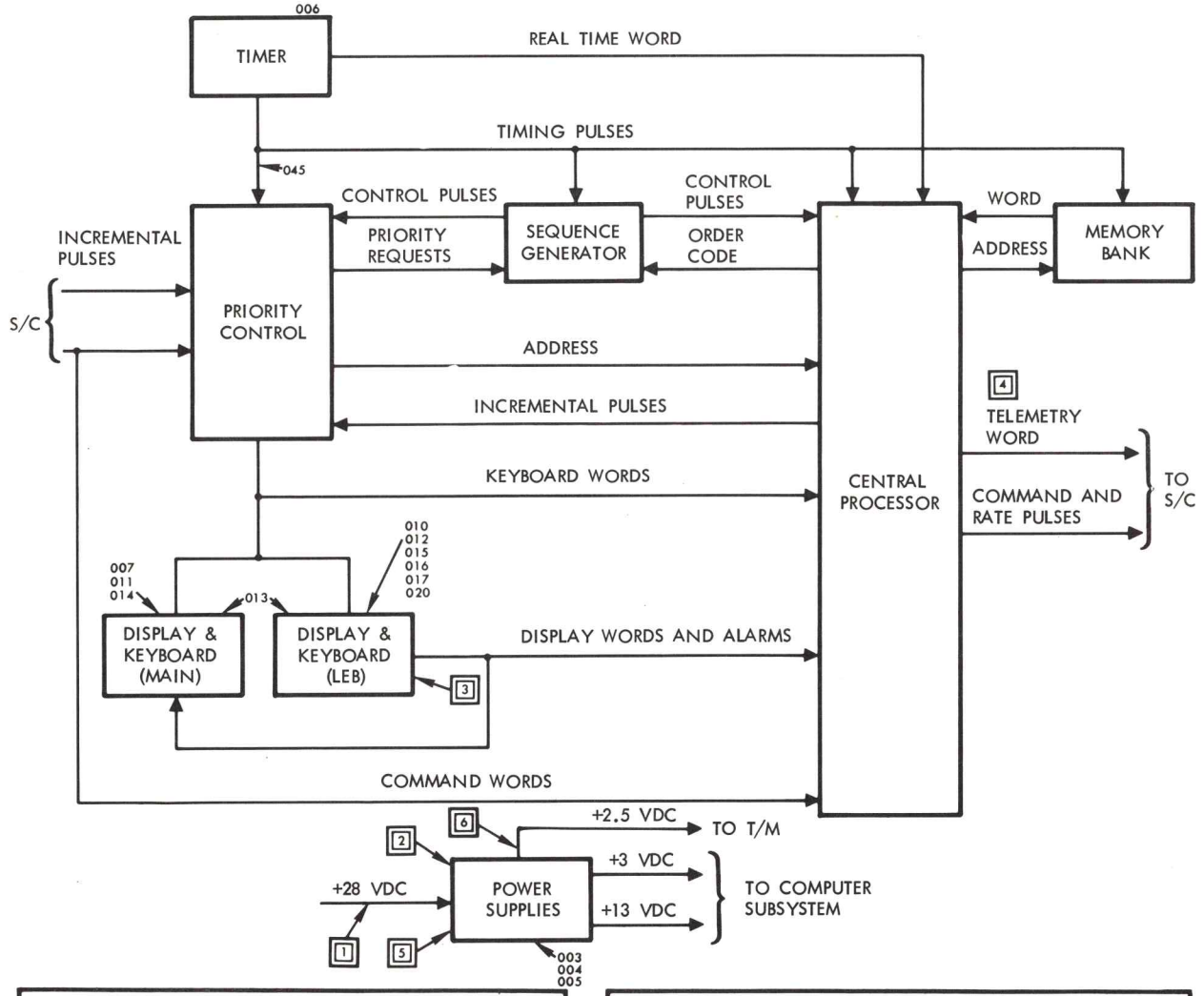

TELEMETRY POINTS		
NO	SIGNAL DESCRIPTION	T/M CODE
1	28 VDC SUPPLY	CG1101V
2	AGC +28 VDC	CG1523X
3	AGC ALARM 1	CG5020X
	AGC ALARM 2	CG5021X
	AGC ALARM 3	CG5022X
	AGC ALARM 4	CG5023X
	AGC ALARM 5	CG5024X
	AGC ALARM 6	CG5025X
	AGC ALARM 7	CG5026X
	AGC ALARM 8	CG5027X
	AGC ALARM 9	CG5028X
	AGC ALARM 10	CG5029X
4	COMPUTER DIGITAL DATA 40 BITS	CG0001
5	AGC TEMPERATURE MONITOR 1	CG4300T
6	2.5 VDC TELEMETRY B1A5	CG1110V

COMPUTER MALFUNCTIONS	
MALF NO.	MALFUNCTION DESCRIPTION
GN-001	UP-DATA LINK BLOCKED
GN-002	UP-DATA LINK BLOCK FAILURE
GN-003	AGC-13 VDC POWER FAILURE
GN-004	AGC 3 VDC POWER FAILURE
GN-005	AGC 28 VDC POWER FAILURE
GN-006	AGC OSCILLATOR FAILURE
GN-007	MAIN DSKY DISPLAY POWER FAILURE
GN-010	LEB DSKY DISPLAY POWER FAILURE
GN-011	MAIN KEYBOARD POWER FAILURE
GN-012	LEB KEYBOARD POWER FAILURE
GN-013	DSKY FLASHER FAILURE
GN-014	MAIN DSKY DISPLAY FAILURE (3RD DIGIT "4")
GN-015	LEB DSKY DISPLAY FAILURE (3RD DIGIT "8")
GN-016	LEB DSKY DISPLAY FAILURE (5TH DIGIT "0")
GN-017	LEB KEYBOARD (KEY "5") FAILURE
GN-020	LEB KEYBOARD (KEY "8") FAILURE
GN-042	AGC INTERRUPTER 30 MILLISECONDS
GN-043	AGC IN ENDLESS LOOP
GN-044	AGC PARITY FAILURE
GN-045	COUNTER INCREMENT IN PROGRESS 30 M SEC

SM-6T-2-02-334A

Figure 2-28. G&N Computer Subsystem

torquing block, during IMU fine alignment, torques the gimbals to the position established in the inflight alignment—fine align mode. These angles are, again, controlled through the IMU mode switching logic.

The calculate actual gimbal angles block provides the mathematics necessary to calculate the change in gimbal angles as prescribed in the blocks explained above. The EOM provides this block with body axis rotational rate Euler angles. The simulated torquing of the gimbals is accomplished in the gimbal torquing block.

To this point, all gimbal angles have been computed in the I_E frame. The I_E to SM direction cosines block, through transformation matrices, converts these I_E frame angles to stable member (SM) inner, middle, and outer gimbal angles.

The actual gimbal angles block provides simulation of the angles developed by the IMU gimbal resolvers. During prelaunch, these angles are set by the prelaunch alignment section. From that time on, they are calculated by the IMU program and are fed out through this block.

The pulsed integrating pendulous accelerometer (PIPA) calculations block simulates the changes in vehicle velocity due to applied forces such as thrust or drag. The PIPA block receives these accelerations from the EOM, integrates the accelerations to obtain a velocity, and provides the AGC with a number of pulses representing a discrete amount of velocity change. This discrete amount, called the PIPA scale factor, is normally determined by three AGC conditions: fine, normal, and emergency. However, in the AMS, only the normal scale factor is available. The counters in the AGC that record the output of the PIPAs supply their outputs to the launch boost monitor, powered flight, and entry programs.

2.6.3.2 IMU Mode Switching Simulation.

This program simulates the operation of relays in the ISS for selection of correct operating modes. Mode selection and time delays are implemented with software logic rather than relays. The ISS modes are as follows:

- Zero encode
- Coarse align
- Manual CDU
- Fine align
- Attitude control
- Entry.

Figure 2-32 is a block diagram of the IMU mode switching simulation.

The turn-on timer delay relay block simulates the 40-second delay timer relay. Upon the activation of the inertial subsystem, the timer is initialized. The delay may be overridden by depressing the MANUAL ALIGN pushbutton on the SCM IMU mode control panel.

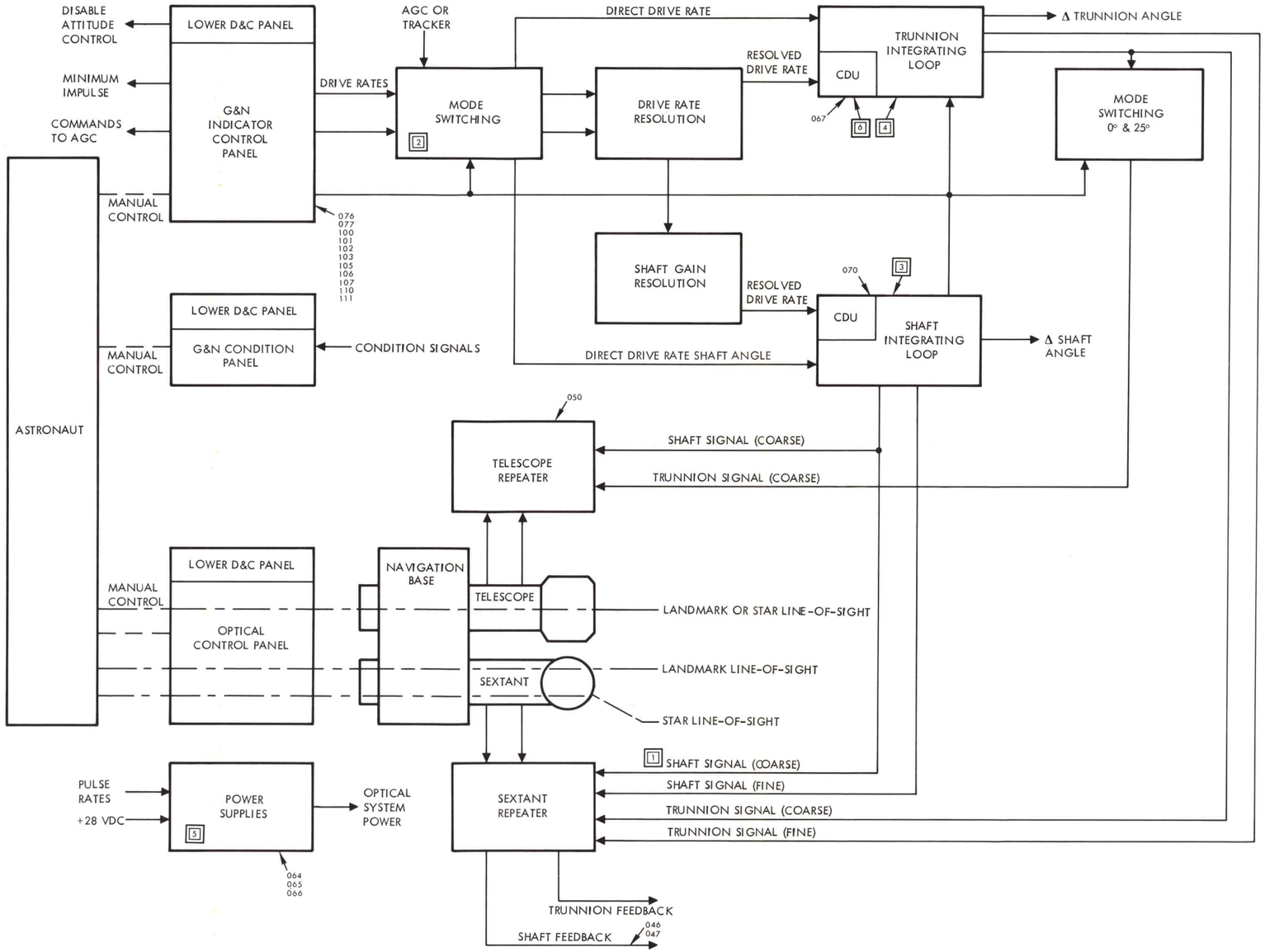

SM-6T-2-02-335A

OPTICAL SUBSYSTEM MALFUNCTIONS	
MALF. NO.	MALFUNCTION DESCRIPTION
GN-046	SEXTANT TRUNNION MOTOR DRIVE AMPLIFIER FAILURE
GN-047	SEXTANT SHAFT MOTOR DRIVE AMPLIFIER FAILURE
GN-050	TELESCOPE SHAFT AND TRUNNION MOTOR DRIVE AMPL FAILS
GN-064	OPTICS 28 V, 800 cps, 5%, POWER SUPPLY FAILURE
GN-065	OPTICS 28 V, 800 cps, 1%, POWER SUPPLY FAILURE
GN-066	OPTICS 25.6 KC POWER SUPPLY FAILURE
GN-067	OPTICS TRUNNION CDU MOTOR EXCITATION FAILURE
GN-070	OPTICS SHAFT CDU MOTOR EXCITATION FAILURE
GN-076	OPTICS CONTROLLER TRUNNION AXIS FAILURE; SCT AND SXT FAIL TO DRIVE IN INCREASE DIRECTION
GN-077	OPTICS CONTROLLER TRUNNION AXIS FAILURE; SCT AND SXT FAIL TO DRIVE IN DECREASE DIRECTION
GN-100	OPTICS CONTROLLER SHAFT AXIS FAILURE; SCT AND SXT FAIL TO ROTATE CLOCKWISE
GN-101	OPTICS CONTROLLER SHAFT AXIS FAILURE; SCT AND SXT FAIL TO ROTATE COUNTERCLOCKWISE
GN-102	OPTICS "SLAVE TELESCOPE" SWITCH FAILS OPEN IN LANDMARK LOS 0° POSITION
GN-103	OPTICS "SLAVE TELESCOPE" SWITCH FAILS OPEN IN OFFSET 25° POSITION
GN-105	OPTICS CONTROLLER MODE SWITCH FAILS OPEN IN DIRECT POSITION
GN-106	OPTICS CONTROLLER MODE SWITCH FAILS OPEN IN RESOLVED POSITION
GN-107	OPTICS MODE SWITCH FAILS OPEN IN ZERO OPTICS POSITION
GN-110	OPTICS MODE SWITCH FAILS OPEN IN MANUAL POSITION
GN-111	OPTICS MODE SWITCH FAILS OPEN IN COMPUTER POSITION

TELEMETRY POINTS		
NO	SIGNAL DESCRIPTION	T/M CODE
1	SEXTANT TRUNNION MOTOR DRIVE (RMS) SEXTANT SHAFT MOTOR DRIVE (RMS)	CG3102V CG3112V
2	OPTICS DIRECT TRUNNION CONTROLLER (IN PHASE) OPTICS DIRECT SHAFT CONTROL..ER (RMS) OPTICS DIRECT SHAFT CONTROLLER (IN PHASE)	CG3209V CG3227V CG3229V
3	SHAFT CDU MOTOR DRIVE (RMS)	CG3123V
4	TRUNNION CDU MOTOR DRIVE (RMS)	CG3133V
5	OPTICS +28 VDC	CG1533X
6	TRUNNION CDU 16X RES ERROR	CG3141V

Figure 2-29. Optical Subsystem

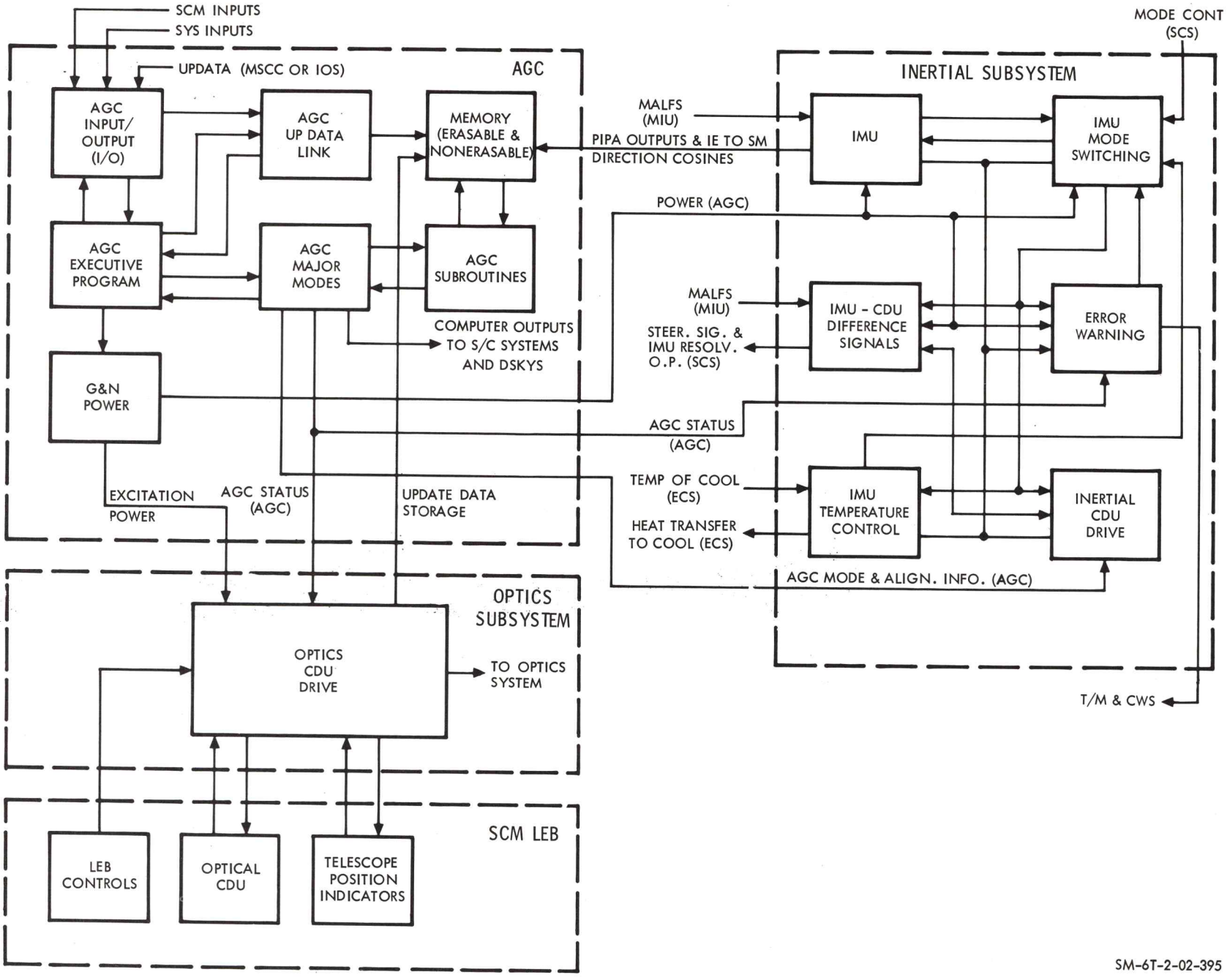

Figure 2-30. G&N System Simulation

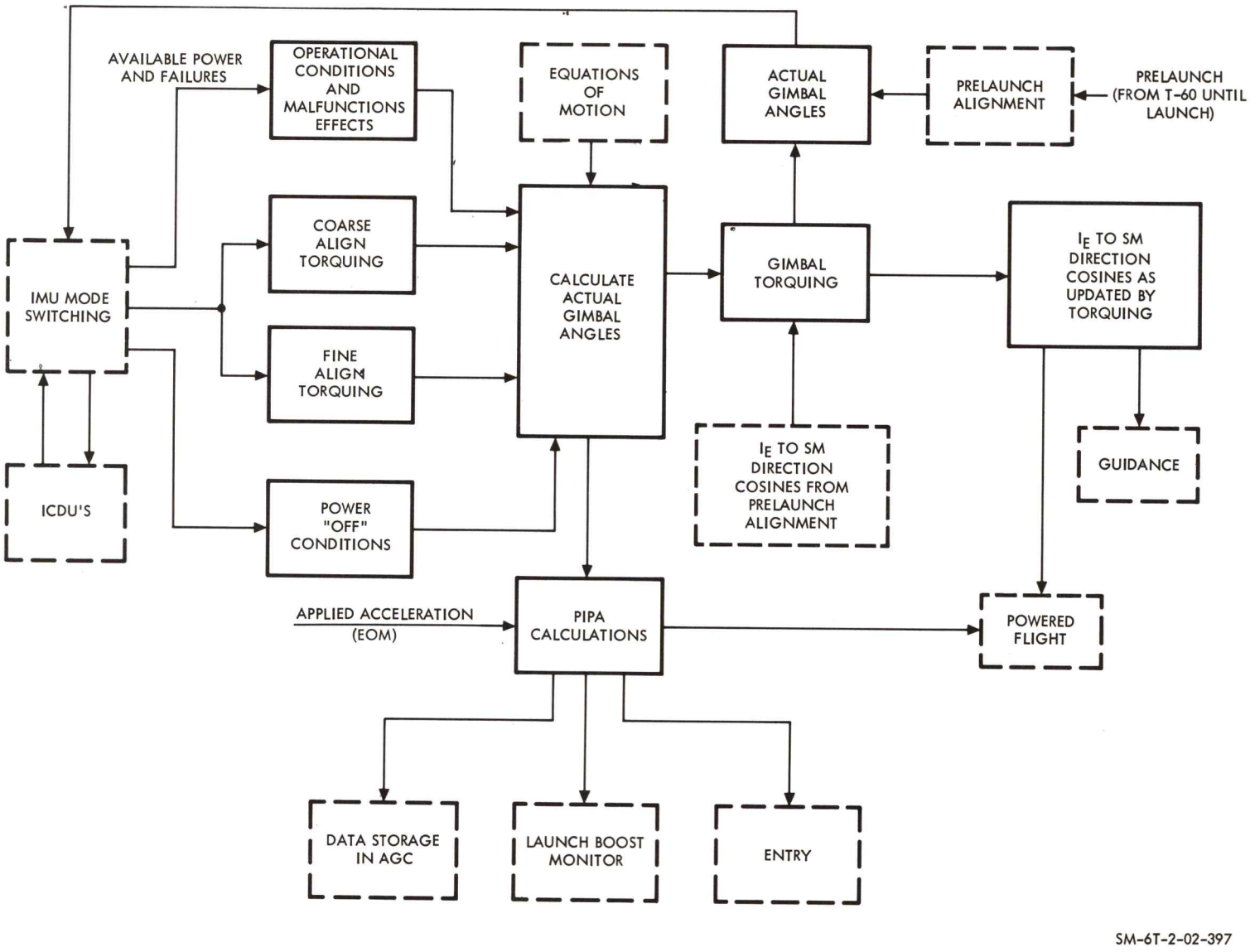

Figure 2-31. Inertial Measurement Unit Block Diagram

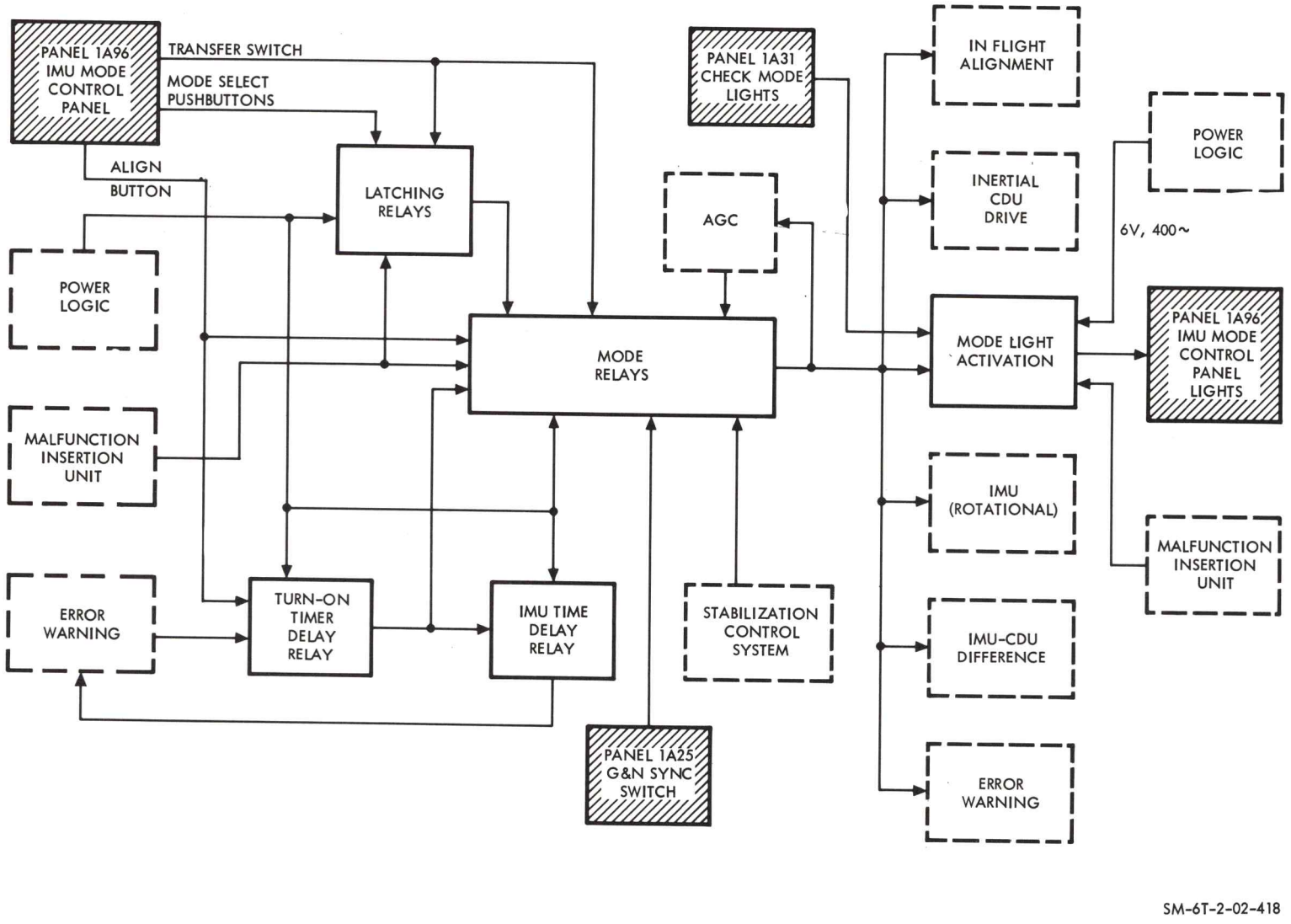

Figure 2-32. IMU Mode Switching

The IMU time delay relay which is used to light the warning indicator at the MAP/DATA VIEWER is activated by the turn-on timer delay relay.

The latching relay block computes the simulated status of the following relays:

- Zero encode latching relay
- Coarse align latching relay
- CDU manual latching relay
- Fine align latching relay
- Attitude control mode relay
- Entry mode relay.

This is done by using interlock logic, mode select pushbuttons, the transfer switch position, and the 40-second time delay. Also used will be inputs from the malfunction insertion unit for failing the power to these latching relays.

The mode relays block computes the state of the following relays:

- Zero encode mode relay
- Coarse align mode relay
- CDU manual mode relay
- Fine align mode relay
- Entry mode relay.

This will be done by using latching relay inputs, computer commands, the transfer switch position, 40-second time delay, and inputs from the SCS and IMU power logic. These mode relay outputs are used by most programs of the ISS.

The mode light activation block provides the discretes to the lights behind the mode select pushbuttons on the SCM IMU Mode Control Panel. These discretes are provided when light power is available and the corresponding mode relays are energized.

2.6.3.3 IMU-CDU Difference Signals Simulation.

The IMU-CDU difference represents the error between the IMU gimbal and the CDU encoder orientations. This error is computed for each axis at 20 times per second and is fed to the following points:

- IMU program for use in coarse alignment
- IMU-CDU error meters
- Stabilization and control system for use as steering commands.

Figure 2-33 is a block diagram of the IMU-CDU difference signals simulation.

The resolver excitation block determines if IMU positional resolver excitation is available. The exitation will be present when the 800-cycle power is available at the IMU and the zero encode mode relay is not energized.

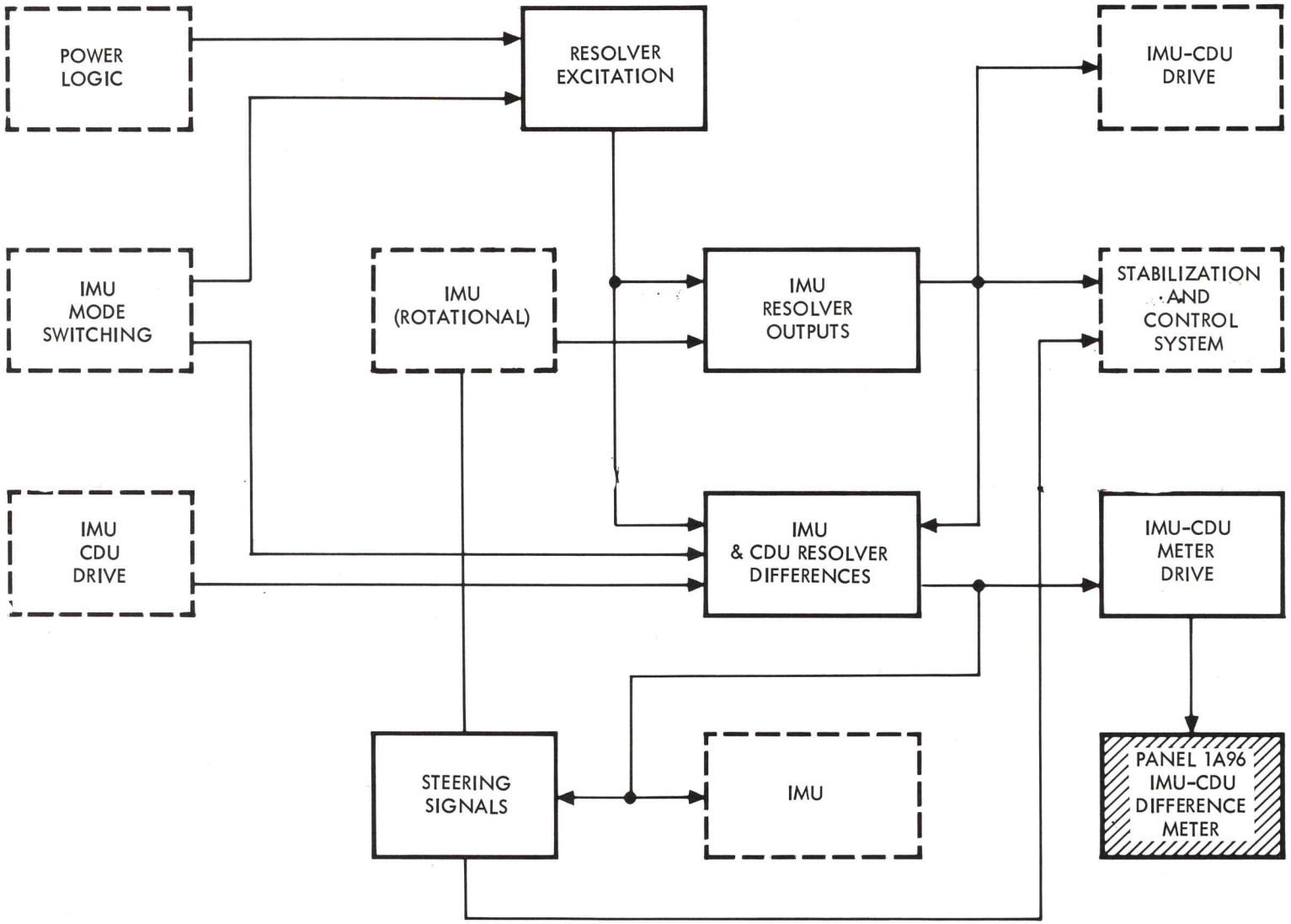

Figure 2-33. IMU-CDU Difference Signals

The outputs of the IMU gimbal resolvers are computed in the IMU resolver outputs block. These outputs will be either zero or the actual gimbal angle, depending on whether the resolver excitation is or is not present.

The IMU-CDU resolver differences block simulates the outputs from the one-speed computing resolvers located on the CDUs. For the inner and middle gimbal CDUs, this is strictly the difference between the single-speed resolvers on the IMU and CDU. Normally, the difference between the single-speed resolvers for the outer gimbal will also be the output, providing there is excitation present. However, if the entry mode is selected, the outer gimbal difference becomes the difference between the single-speed resolver on the IMU and the 16-speed resolver on the CDU.

Since the meters which display the IMU-CDU differences in the S/C do not have linear movements, it is necessary to vary the gain factor of the D/A converters feeding the IMU-CDU difference meters in the AMS. This is accomplished in a realistic manner by the IMU-CDU meter drive block.

The steering signals block uses the IMU-CDU difference signals to generate steering signals. It makes the necessary transformations to provide the steering signals to the SCS in both the body axis and the entry axis coordinate systems. This is accomplished by first processing the signals through a yaw-pitch resolver which is equal to the outer gimbal angle. This will yield both the entry and the body pitch error and the yaw entry error. Next, the signals are fed through a fixed resolution transformation matrix which yields yaw body error and roll body error. Roll entry error is the same as roll gimbal error and, therefore, needs no processing.

2.6.3.4 Error Warning Simulation.

The purpose of the error warning section is to simulate the failure detection circuit outputs to the AGC and to the MAP/DATA VIEWER indicators as well as the signal conditioning circuit outputs to telemetry. Figure 2-34 is a block diagram of the error warning section of the ISS. All error warning indications are the direct or indirect result of a malfunction insertion from the MIU.

The following failures, when inserted from the MIU, are fed to the AGC for operations within the computer:

- CDU fail—indicates loss of encoder excitation and any CDU error out of specific tolerance.
- PIPA fail—indicates any PIPA error out of tolerance.
- IMU fail—indicates any gimbal servo error out of tolerance, loss of 800 cps wheel supply excitation, loss of 3200 cps ducosyn excitation, or gimbal lock condition existing.

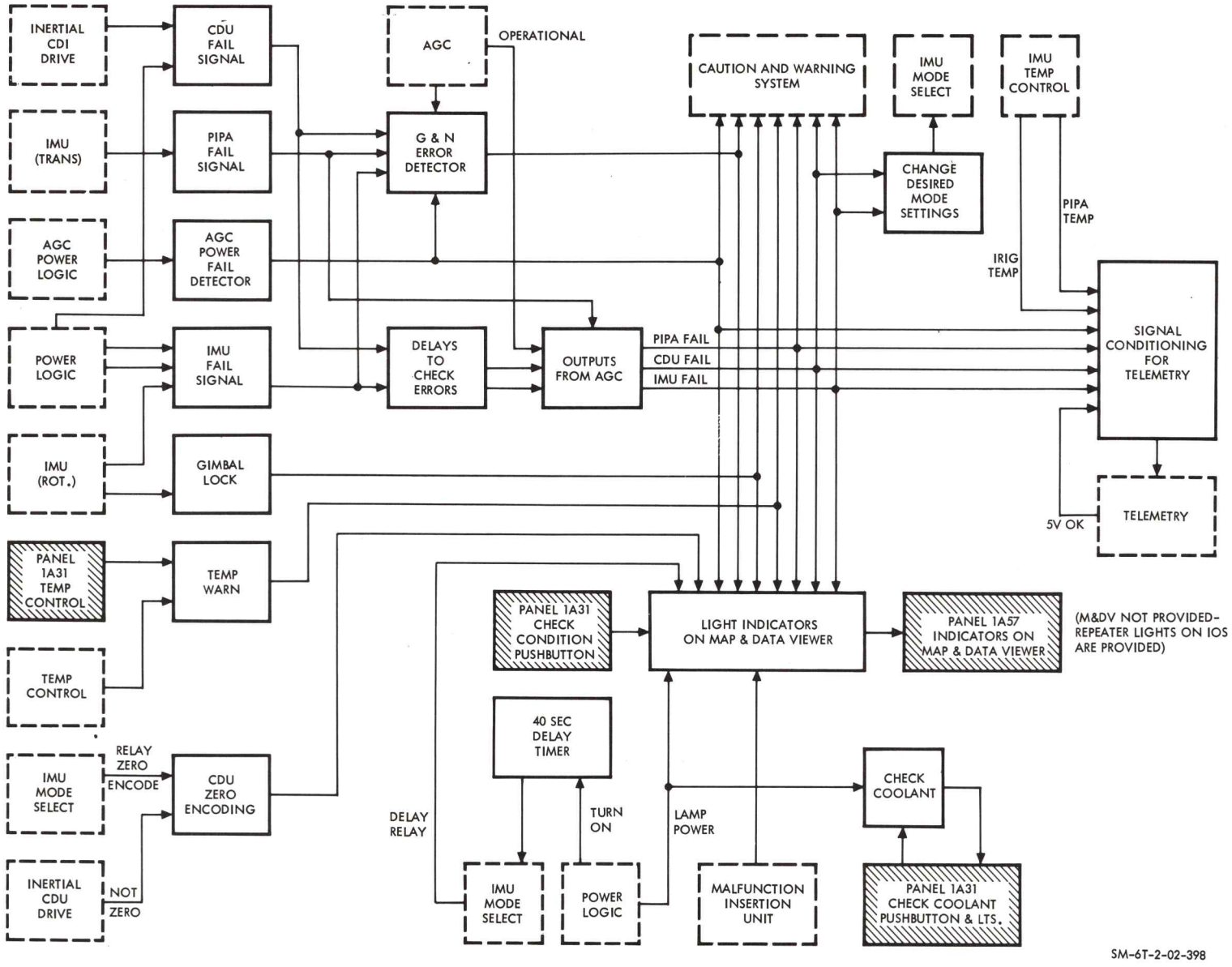

Figure 2-34. Error-Warning Flow Chart

- AGC power fail—simulates failure of the 3, 13, or 28-volt power supplies for the AGC. (AGC fail is not an input to the computer.)

- G&N error—a composite indicating AGC power failure, CDU failure, PIPA failure, or IMU failure, as explained previously.

- Gimbal lock condition—simulates the angle between the middle and outer gimbal exceeding ±60 degrees. This is a potential gimbal lock condition.

- IMU temperature warning—simulated energizing of the temperature alarm relay in the temperature control unit.

- CDU zero encoder—simulates energizing of the zero encode mode relay and any one of the CDUs not zeroed.

The following failures are outputs from the AGC:

- A CDU fail is simulated if the AGC is operational and has a CDU fail input with neither the zero encode mode relay nor the five align mode relays energized, or if any of these relays are energized and the CDU fail persists for 30 seconds.

- An IMU fail output is simulated if the AGC is operational and there is either an IMU fail input while the mode relay is de-energized or IMU fail persists for 30 seconds while the mode relay is energized.

- A PIPA fail output is simulated if there is a PIPA fail input to the AGC and the AGC is operational.

When a CDU fail or IMU fail output is present, the change desired mode settings block will command a change in the present command mode setting.

The IMU 40-second delay timer is used by the IMU mode switching program to determine the state of the IMU delay relay. Its output indicates that power has been applied to the inertial subsystem for 40 seconds.

The following lamp indicators on the MAP/DATA VIEWER illuminate if lamp power is available and the CHECK CONDITIONS lamp pushbutton is depressed or the corresponding failure is true:

- G&N error
- IMU fail
- CDU fail
- PIPA fail
- Gimbal lock
- AGC power fail
- Temperature warning
- Zero encode warning
- IMU relay warning.

Also, three spare warning lamps will receive logical ones if lamp power is available and the CHECK CONDITIONS lamps pushbutton is depressed. Indicator malfunctions from the MIU are also inserted in this block. The COOLANT CHECK lamps receive a logical one if lamp power is available and the check coolant pushbutton is depressed.

The G&N system conditions the following signals for telemetry transmission if the T/M 5-volt reference is within tolerance:

- PIPA fail signal
- IMU fail signal
- CDU fail signal
- AGC power fail signal
- PIPA temperature
- IRIG temperature

The following signals from the power logic portion of the IMU mode switching program are conditioned and sent to telemetry from this point:

- IMU +28-volt dc operate
- IMU +28-volt dc standby

2.6.3.5 IMU Temperature Control Simulation.

The IMU temperature control maintains the IMU temperature within prescribed limits. It utilizes a primary mode and three backup modes of operation for use in the event of primary circuitry failure. Figure 2-35 is a block diagram of the IMU temperature control simulation.

In the heater and blower operational points and relay logic block, comparisons are made to determine blower speed, heater dissipation necessary for proper operating conditions, relay logic to determine proper heater activation (which heater will be operating), and which mode configuration is being simulated.

The thermostat and mercury switch block simulates actual temperature sensor logic and the thermostat and mercury switch conditions.

The relay logic block controls selection of the temperature control mode. It also provides a temperature out of limits signal to the error warning section.

The mode in which the system is presently operating is determined in the temperature control mode block. In the auto/override mode, automatic switching to emergency mode is accomplished when the temperature goes out of limits.

In the malfunction insertion block, the effects are determined for malfunctions which alter calculations of heat generated.

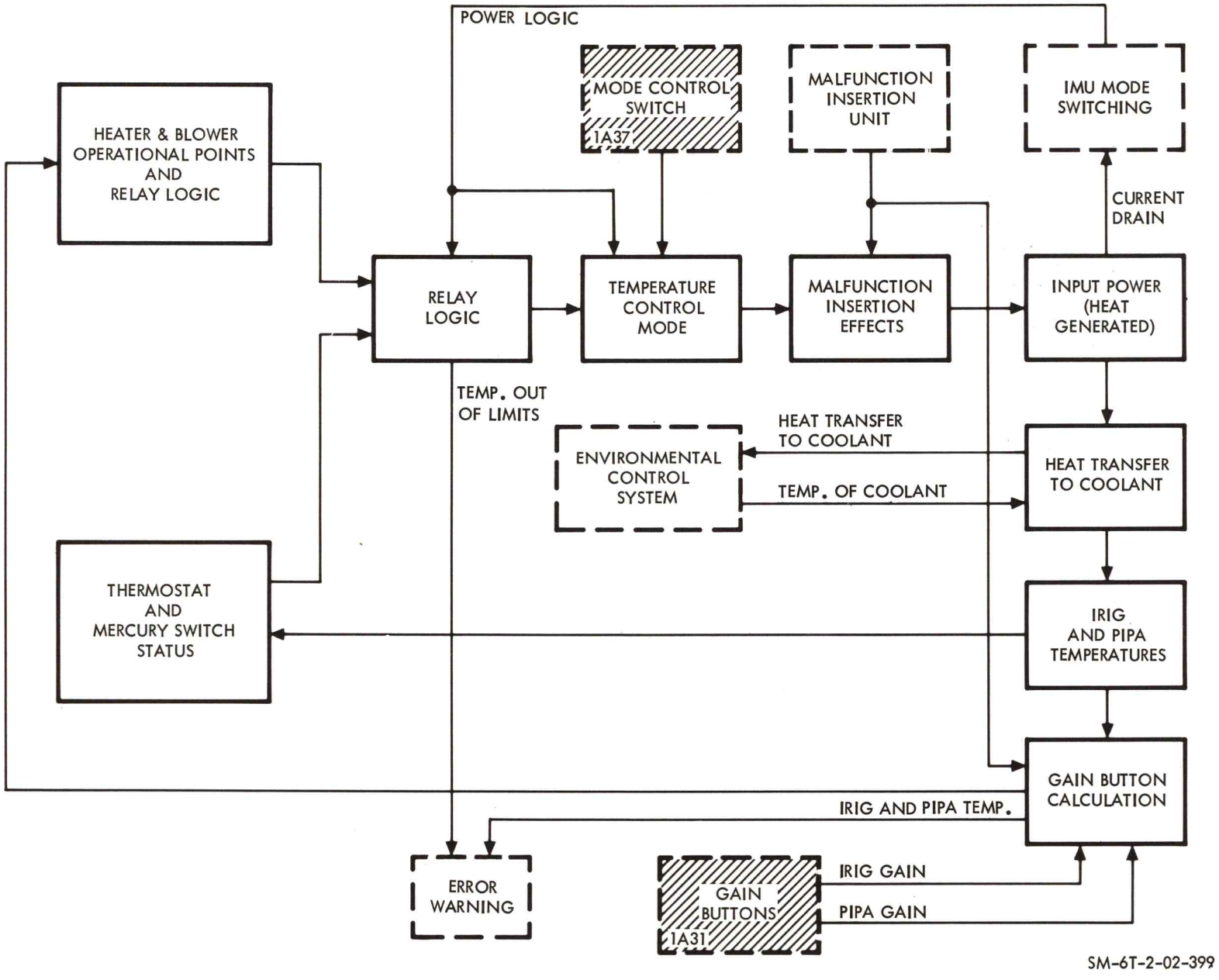

Figure 2-35. IMU Temperature Control

The input power block calculates the total heat generated in the IMU. It also sends out the simulated current drain to the mode switching logic program.

The temperature of the ECS coolant is received by the heat transferred to the coolant. Based on this temperature and the calculation of input power, the amount of heat transferred to the coolant is then determined and sent to the ECS.

The IRIG and PIPA temperatures block determines the corresponding temperatures based on input power and input coolant temperature. The resultant is used within the IMU temperature control section.

The gain button calculation block normally passes IRIG and PIPA temperatures to the error warning program and, internally, to the heater and blower operational points and relay logic block. When the IRIG gain button in the SCM is depressed, an out of tolerance temperature signal is substituted for the normal IRIG temperature signal. This causes an IRIG TEMP indication in the SCM and at the IOS. The same process is used for the PIPA temperature button. A normal button is also provided in the SCM to substitute normal readings for the actual temperature inputs.

2.6.3.6 Inertial CDU Drive Signal Simulation.

This program computes the signals necessary to drive the three coupling display units (CDUs) associated with the inertial measurement unit angles. This requires that a digital to analog converter and a digital to resolver converter for each CDU be used as inputs to the servo loop driving the CDU. A shaft encoder in each loop feeds back the actual angle of the CDU to close the loop. Also, this provides information which allows updating of the storage areas in the simulated AGC allocated for the gimbal angle positions. The inertial CDU drive signals program also activates the displays at the IOS which correspond to the IMU-CDUs, optics CDUs and telescope shaft and trunnion readouts. Figure 2-36 is a block diagram of inertial CDU drive simulation.

The Inertial CDU motor excitation block computes the availability of excitation to the motor. Excitation is available whenever the ISS is on CDU manual, the mode has not been selected, or the slew switches are engaged.

The desired CDU positions block determines the position to which each CDU will be driven on the bases of the power available, mode selected, and alignments in progress.

The commanded CDU position block computes the commanded position of the CDU on the bases of the availability of motor excitation, the slew switch positions, and present position of the CDU.

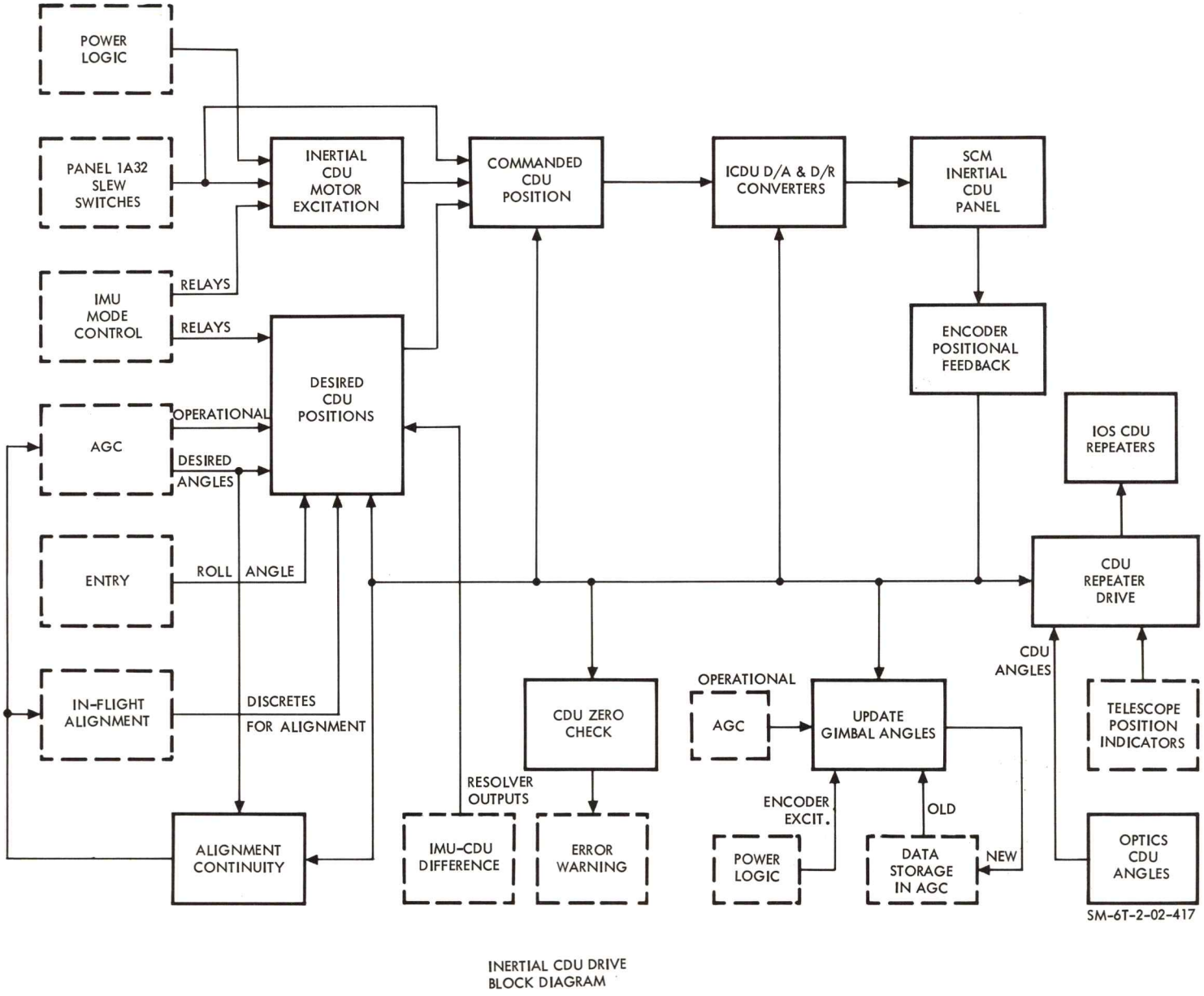

Figure 2-36. Inertial CDU Drive Block Diagram

The CDU displays in the SCM are controlled by the digital to analog (D/A) converter and the digital to resolver (D/R) converters in the inertial CDU D/A and D/R converters block.

The update gimbal angles block performs the same function as the resolvers on the spacecraft CDU. It updates the AGC angles representing the inner, middle, and outer gimbal angles by the amount they are changed during the previous iteration, providing the encoder excitation is present.

The CDU repeater drive block provides updating of the IOS repeaters for the inertial CDU positions, optical CDU positions, and the Telescope Shaft Position indicator positions. An output is provided every 0.1 second from this block. Since there are seven values being updated, each display at the IOS is updated every 0.7 second.

The CDU zero check block provides a constant check on the output of the CDUs during the zero encode mode. It is commanded by the error warning program to turn off the SCM ZERO ENCODER LIGHT when all three ICDUs are at zero.

The alignment continuity block provides discretes to the alignment program, indicating when the commanded gimbal angles have been reached. This is necessary since there is a certain order for torquing the gimbals in the alignment procedures to avoid gimbal lock conditions.

2.6.4 AGC SUBSYSTEM SIMULATION.

The simulated Apollo guidance computer (AGC) performs the data processing required to accomplish guidance and navigation tasks during the following mission periods:

- Prelaunch
- Boost
- Coast
- Prethrusting
- Thrusting
- In-flight alignment
- Entry
- Boost aborts.

To accomplish these tasks, the astronaut directs the AGC's activity through use of the display and keyboard (DSKY). The AGC communicates the result of its computations to the astronaut through the DSKY data display. During the performance of its tasks, the simulated AGC uses inputs from, and provides outputs to, various simulated S/C systems including the G&N optics and inertial subsystems.

In simulating the AGC, the AMS uses programs closely approximating those in the actual SC 012 AGC at the time of the AMS data freeze. For

purposes of explanation, the AGC simulation is divided into the following parts:

- AGC executive program simulation
- AGC input/output (I/O) simulation
- AGC updata link simulation
- AGC major mode programs simulation
- AGC subroutines simulation.

The AGC executive program controls operation and sequencing of all other AGC programs. The AGC I/O program translates astronaut keyboard inputs into data usable by the AGC and converts for astronaut display the computed or stored AGC parameters. The updata link program allows the AMS instructor, using the IOS keyboard, to simulate updata from earth during the nonintegrated mode. The major mode programs are mission phase oriented control programs which schedule the AGC subroutines to provide a working mission program. The major modes associated with each mission phase are listed in section 1 of Volume II. The major mode programs and the first 23 subroutines communicate with the astronaut by way of the DSKY. The first 23 subroutines are primarily control and logic programs; however, they are less comprehensive in nature than the major modes and are usually common to more than one mission phase and major mode. Routines 24 to 84 are primarily computational type routines and have no direct interface with the astronaut. These routines and combinations thereof are equivalent to SC 012 AGC tasks and jobs.

2.6.4.1 AGC Executive Program Simulation.

For purposes of discussion, the executive program is divided into real-time and nonreal-time sections; real time meaning a fixed set of equations are executed at a constant rate of 20 times per second. The real-time portion of the program executes the "interrupt" mode tasks and certain other tasks such as downlink display updates, etc. Also being monitored in real time are jobs peculiar to the simulator such as malfunction insertion reset and step ahead.

After real-time equations are processed, the executive turns control over to the mission program or to the I/O program if DSKY activity is required. This period is the nonreal-time portion which is the simulator equivalent of the AGC while it is computing uninterruptedly.

The executive program controls the nonreal-time computations by transferring control to the appropriate point in the current major mode program. The executive program basic routines are the wait list and the priority list. Wait list is a routine which enables short duration tasks to be executed as a function of time. Major mode and I/O programs place tasks on the wait list and specify the time at which they are to be executed. A countdown clock is set and decremented for each task by the executive program real-time portion. When the clock reaches zero, the task is executed in real time. Reading the accelerometers during thrusting and setting up a long computational job on the priority list are typical tasks executed from the wait list.

The priority list is a tool by which the executive program sequences jobs during nonreal time. The priority list sequences long duration jobs as a function of the relative importance of each job request currently appearing on the priority list. Jobs are placed on the priority list in a number of ways. The astronaut activates the priority list through the DSKY by requesting a major mode or a routine. Thereafter, the major mode and/or routines use it by filling the wait list with jobs to be executed. For periodic long-duration jobs the wait list may be used to reiterate a command at specified times causing the job to continue.

In summary, the real-time portion of the program is executed first followed by the nonreal-time program. In the nonreal-time program, the job of highest priority is executed first, and computation is continued until all the jobs on the priority list are executed or until the simulator real-time interrupt signal is received. At that time, the AGC interrupt routine stores the location where the nonreal-time job was interrupted so that control may be transferred to that point in the program when the job is resumed.

2.6.4.2 AGC Input/Output (I/O) Simulation.

Inputs from the DSKY are sampled by the executive program at 20 samples per second. When a key code occurs, the key code is stored immediately by the executive program and a priority is established for the I/O program. The DSKY request is then serviced by the I/O routine CHARIN, or character in routine.

Outputs to the DSKYs are received by the I/O NVSUB routine. If the I/O is "BUSY," the request is placed on a wait list and is executed when the astronaut or AGC routine currently using the I/O finishes with the displays. The displays remain busy for 10 seconds following each I/O activity to ensure that displayed data are visible to the astronaut.

In general the I/O is characterized by the same capability as AGC PINBALL, except for the external machine address to specified logic which is not simulated.

2.6.4.3 AGC Up-Data Link Simulation.

The AGC up-data link (UDL) program provides processing for any UDL input received by the executive program in either integrated or non-integrated modes. The program is called by executive priority and operates in nonreal time.

Operation of the UDL program and the resultant AGC response is determined by the IOS UDL panel mode selection and the current AGC major mode. In all cases except during optics scoring as explained subsequently, the UDL program will command the AGC I/O program to decode the UDL key inputs, execute the verb functions, and drive the SCM DSKY and related IOS displays.

The operational modes provided by the UDL program in conjunction with the executive program are the integrated mode and the nonintegrated mode.

With the integrated mode selected from the IOS UDL panel and the AGC in major mode 27 (ground update), the UDL program will be called (by priority) after executive recognition of each key code input. The up-data messages are generated by MSCC at the rate of approximately 9 key code characters per second.

With the nonintegrated mode selected from the IOS UDL panel and the G&N key depressed, the UDL program will be called by the executive program in the same manner as during the integrated mode, except that the key code inputs are generated at the IOS UDL panel keyboard. The instructor may duplicate any SCM DSKY entries from that panel by selecting the G&N up-data key followed by the proper noun, verb, and numeric information. In addition to G&N update, AGC clock alignment (CTE), optics scoring (data display), and real-time commands (RTC) may be initiated through the UDL program in conjunction with the UDL panel keyboard on the IOS.

By entering the verb codes for either "AGCS clock alignment" or "RVT update" from the UDL panel of the IOS, the UDL program will initiate a routine which collects and scales the necessary data (position and velocity from equations of motion and time from the central timing program), forms key codes for each data digit, and sends these to the I/O program at a rate of 7 characters per second.

By entering verb codes in the IOS UDL keyboard representing an expected type of optics sighting (landmark, star, etc.) and the star and/or landmark numbers associated with the sighting, the IOS instructor may set the visual system up to measure the trainee's sighting accuracy. The UDL program provides the XYZ coordinates of the sighted object(s) and provides a flag indicating the type of sighting to the visual program. No SCM displays are activated, nor is the AGC I/O program called as a result of IOS optics scoring entries. The scoring may be viewed from the IOS TEL SEXTANT DISPLAY. This is called data display and is initiated by depressing the DATA DISPLAY button on the IOS UDL panel.

2.6.4.4 AGC Major Mode Programs Simulation.

One of the functions of the AGC program is the simulation of the IMU, including the gimbal angles, from 60 seconds prior to lift-off until lift-off. This function consists of two major modes: major mode 02, prelaunch gyro-compassing; and major mode 04, prelaunch inertial reference.

Major mode 02 initializes the IMU stable member orientation so that at launch, the Z axis is along local vertical (down), the X axis points downrange, and the Y axis completes the right-handed triad. The corresponding inertial coupling display units in the SCS are driven to these values. Since the stable member is rotating with the vehicle until after receipt of a

guidance reference release signal, the gimbal angles will not change; therefore, they are read in as constants at major mode initialization. Upon receipt of guidance reference release, control is transferred to major mode 04.

Major mode 04, prelaunch inertial reference, is displayed to the astronaut and confirms receipt of the guidance reference release signal. This signal is also sent downline, terminates the gyrocompassing routine, and allows the simulated IMU stable member to go inertial. This is accomplished by activating the IMU simulation program. Upon receipt of the lift-off signal, the average g routine is called to be done in 2 seconds thereafter. Major mode 04 then terminates itself and calls major mode 11, boost monitor pre-LET jettison.

Upon receipt of the lift-off signal the AGC will display major mode 11, initiate DSKY booster monitor displays and drive the IMU CDUs to the stored polynomial history associated with the Saturn attitudes during launch and ascent. The attitude error needles on the FDAI will then indicate the CSM axes, the difference between simulated CSM attitude from the launch boost tape programmed Saturn attitude. The FDAI ball is slaved to the IMU and indicates total attitude. The DSKY will display altitude, inertial velocity magnitude, and the angle of the inertial velocity vector above the local horizontal.

At lift-off plus 171 seconds, the AGC will terminate major mode 11 functions, display major mode 12, and initiate the post-LET jettison boost monitor functions. The simulated ISS is switched to fine align mode, thereby nulling the FDAI attitude error indications. The FDAI ball will continue to indicate total attitude. The AGC will compute for DSKY display the following three quantities associated with instantaneous Saturn shutdown: Delta V, required for SPS insertion of the CSM into orbit; maximum g, predicted for free-fall and entry at 1/2 full lift; and free-fall time to 300,000 feet altitude. Also at initiation of major mode 12, the AGC will start monitoring vehicle thrust and the S-IVB/CSM separation (abort) signal.

In major mode 21, CSM local vertical, the G&N system holds the spacecraft attitude fixed with respect to local vertical axes. The spacecraft negative Y axis will be held in the direction of the orbital angular momentum vector and the pitch attitude will be held to the value inserted by the pilot via the DSKY keyboard.

Landmark tracking (major mode 22) accomplishes CSM orbital navigation by tracking of known landmarks using the SCT. A sighting mark is obtained by the astronaut on the known landmark. The inertial and optical CDU angles, time, and the latitude and longitude of the landmark entered into the AGC by the astronaut are used by the orbital parameter update routine to calculate the orbital parameter changes. The changes are displayed in order for the astronaut/ground to decide upon their validity before incorporation into the AGC calculation of S/C position and velocity. The astronaut may direct the computer to automatically point the SCT to the landmark or the acquisition may be made manually.

The star-lunar landmark measurement, major mode 23, is available for training purposes only. The AGC does not use the data except for display and telemetry purposes. Acquisition of the sighting targets is assumed to be performed manually.

Information is inserted into the AGC by way of the digital uplink by transmission from the ground while the AGC is in AGC update, major mode 27. The AGC will be programed to accept the following uplink inputs:

- Lift-off
- AGC clock alignment
- Position, velocity, and time data
- Prethrust orbital change data consisting of the following: latitude of perigee or apogee, longitude of perigee or apogee, maximum delta V, pitch trim, yaw trim, and time of ignition.
- Prethrust return to earth data consisting of the following: latitude of landing site, longitude of landing site, maneuver, pitch trim, yaw trim, delta V tailoff.

Maneuvers in earth orbit are set up in the prethrust orbit change maneuvers, major mode 31, by inserting the following target data into the AGC: SPS ignition time, desired apogee or perigee altitude, altitude and longitude of desired apogee or perigee, maximum allowable delta V, SPS engine trim angles, and delta V tailoff. The AGC will extrapolate the navigation state vector forward to ignition time, compute the desired trajectory, and display the following derived data: perigee or apogee altitude, required delta V, and miss distance from the desired apogee or perigee location. This data load process is repeated as often as desired to obtain a satisfactory set of derived data. The data may be loaded by the crew using carry-on data or maneuver requirements developed from a ground track plot and present orbit characteristics. Alternatively, the ground may load the data by way of the uplink in major mode 27 or via the voice link for insertion by the crew.

After completion of the target data load, the AGC will display time-to-ignition, and the crew will proceed when ready with the IMU alignment mode(s), if required. After alignment, the desired body attitude for thrusting will be calculated and obtained via the attitude maneuver routine.

Prethrusting, return to earth (major mode 32), sets up the return to earth or deorbit maneuver in a manner similar to the earth orbit maneuvers described for major mode 31. The following target data must be inserted into the AGC for this mode: latitude and longitude of the desired splash point, deorbit delta V, SPS engine trim angles and delta V tail-off. The AGC will compute and display the following data: SPS ignition time, miss distance from the desired splash point (no out-of-plane thrust is used), and entry path angle. This data load process may be repeated as often as desired to obtain a satisfactory set of data. The alternate methods of developing and loading the target data available in major mode 31 are available here also.

After completion of target data loading, the AGC will display the time to ignition, and the crew will proceed when ready with IMU alignment. The thrusting body attitude is then set up as in mode 31.

Major mode 41 controls thrusting for orbit change maneuvers, and major mode 42 controls thrusting for the return to earth maneuver. These modes monitor the ullage maneuver prior to SPS ignition, command SPS ignition, and initiate thrust vector controls and delta V monitor routine. In the case of return to earth, the free fall interrupt routine is enabled and the average g equations continue to be computed after engine shutdown. After SPS shutdown, the orbital parameters will be displayed and the free fall trajectory initialized.

The G&N standby SPS monitor (major mode 46) monitors all SPS burns not under G&N control in order to maintain trajectory information. The average g computations are also used for monitoring purposes. After the thrust-off flag is sent out by the delta V monitor routine, the integration is terminated and free fall orbital integration is updated.

The G&N standby RCS monitor (major mode 47) performs the same functions for RCS firings as does major mode 46 for SPS burns.

Alignment of the IMU to a known spatial orientation is required prior to landmark tracking, powered flight, entry guidance, and attitude maneuvers. A performed orientation is defined by the major mode in process at the time IMU in-flight alignment is initiated. Alignment to this preferred orientation may be bypassed if the AGC is explicitly so instructed by the crew in order to expedite a maneuver. It is always essential, however, that the existing IMU orientation be stored in the AGC from a previous alignment process which has been followed by continuous operation of the IMU. The AGCs knowledge of IMU orientation contains a drift error roughly proportional to the amount of time since the last alignment. It is also essential that, whenever alignment is bypassed, the crew ensure that subsequent usage of the IMU will not result in an excessive middle gimbal angle (approximately 15 degrees for powered flight guidance and 60 degrees for other functions).

The IMU in-flight alignment program consists of three major modes and associated subroutines. The major modes are major mode 51, IMU orientation determination; major mode 52, S-IVB/IMU align; and major mode 53, CSM/IMU align. Each major mode has a major mode display which indicates the operation in process.

Major mode 51, IMU orientation determination, is used when the IMU spatial orientation is unknown, such as just after IMU turn-on, after a period of drift, or after the IMU has lost stabilization due to gimbal lock or a severe power transient. This mode determines the inertial orientation of the IMU stable member with respect to the fixed celestial reference system utilizing star sighting information. The navigator tracks and marks two known stars using the optics and inserts the direction of the star lines of sight into the computer. Working from this, the AGC determines the IMU orientation. Upon completion of its last routine, major mode 51 terminates itself and transfers control to the AGC idling major mode.

Major mode 52, S-IVB/IMU align, is specifically designed for IMU alignment during the period when the CSM is attached to the S-IVB. This alignment is made to bring the IMU gimbal angles to the prelaunch orientation. In this mode, no CSM attitude maneuvers can be performed. It is assumed upon entering this major mode that the IMU will be inertially stabilized at a known orientation with respect to the celestial reference system, the S-IVB will be controlling the spacecraft attitude in either local vertical mode or sighting attitude mode, the desired IMU orientation (i.e., the prelaunch IMU orientation) is stored in the AGC and will not result in gimbal lock for any of the preprogramed S-IVB attitudes, and the major mode will normally be called by the astronaut by DSKY entry. Upon completion of its computations, major mode 52 terminates itself and calls the AGC idling major mode.

Major mode 53, CSM/IMU align, is a fine alignment process in which the IMU orientation is precisely determined by sextant tracking and trimmed to the preferred orientation by torquing the gyros. Its purpose is to align the IMU and the CSM to a final orientation specified by a previous major mode. In this process, the stars are automatically selected and acquired. Also, spacecraft maneuvers to permit star acquisition and to obtain the CSM attitude called for in the governing major mode are automatically performed and integrated with the star tracking tasks. It is assumed that upon entering this major mode the CSM and S-IVB have been separated, that the IMU is inertially stabilized at a known orientation, that a desired final platform orientation and a desired final vehicle attitude have been previously specified and stored in the AGC, and that an interim vehicle attitude may be necessary in order to allow star sightings. The star sightings must be taken after the platform has been coarse aligned due to the inaccuracies inherent in the coarse align procedure. Upon completion of the fine alignment, major mode 53 is terminated and the AGC idling major mode is called.

The step ahead inhibit is set at the start of C/M-S/M separation maneuver, major mode 61. Time to free fall and the velocity to deorbit are computed unless a boost abort is in process. Then the computer determines the attitude required for C/M-S/M separation. A routine is called next which performs this attitude maneuver. Then the major mode is updated to 62.

C/M-S/M separation and preentry maneuvers, major mode 62, will enable a routine to compute the gimbal angle attitude after separation. The routine performing entry initialization is also enabled by major mode 62. When 0.05 g is simulated, the major mode switches to major mode 63.

Major mode 63, post-0.5-g phase, waits for a keyboard display priority to indicate roll angle and maximum g's to the astronaut. The entry equations are solved using input steering commands. When drag exceeds a specified level, the major mode is switched to 65.

Major mode 65, prefinal phase, switches in the final phase Boolean and major mode 66.

Major mode 66, final phase, switches the displays to indicate lateral miss error and bank angle. The entry equations are solved until drogue chute deployment.

In the event of a LET abort, the G&N has no control function. The system will continue driving the FDAI ball and will continue the Pre-LET jettison boost monitor DSKY displays. Upon receipt of the C/M-S/M SEPARATION signal the ISS will be switched to Fine Align Mode thereby nulling the FDAI attitude error needles.

The first abort burn, major mode 71, monitors the S-IVB/CSM separation and the first SPS manual burn which is used to arrest tumbling and increase the S-IVB/CSM separation distance.

The available means of a safe abort will be calculated and displayed to the astronaut and to the ground through the abort mode selection, major mode 72. The abort mode is then selected by the astronaut from the three types available. These are abort to discrete recovery area, contingency orbit insertion, or free fall to continuous recovery area.

The AGC will indicate to the astronaut which choice it considers feasible by one of the following:

- Flashing register R1 if thrusting to the discrete recovery area is feasible
- Flashing register R2 if contingency orbit insertion is feasible
- Steadying the displays if free fall to the continuous recovery area is the only alternative.

The discrete recovery area is located at 29.50 degrees north latitude and 29 degrees west longitude. The continuous recovery area extends from launch point (approximately 78 degrees west longitude) to 47 degrees west longitude.

The contingency orbit is defined as perigee equal to altitude at time of abort (must be greater than 300,000 feet) and apogee of 105 n mi.

Thrust to the discrete recovery area, major mode 73, maneuvers the S/C to the attitude specified by the SCM abort mode selection program for SPS ignition. This mode also prepares the S/C system to count down, initiate, control, monitor, and to terminate a boost abort thrust to the continuous recovery area if the astronaut should make that choice.

Contingency orbit insertion, major mode 74, maneuvers the S/C to the attitude specified by the CSM abort mode selection program for SPS ignition. This mode also prepares the simulated AGC to count down, initiate, control, monitor, and terminate a boost abort thrust to contingency orbit insertion if the astronaut should make that choice.

2.6.4.5 AGC Subroutines Simulation.

There are 84 subroutines in the AMS simulation of the AGC. These subroutines are organized in the proper order for each major mode. A single subroutine may be used in several major modes as they are not mission phase oriented.

2.6.5 OPTICS SUBSYSTEM SIMULATION.

G&N optics subsystem simulation (OSS) acts as an interface between the G&N optics controls in the lower equipment bay of the SCM and the visual systems, AGC, and displays. In the AMS, the OSS consists of an optics CDU drive program. The telescope and sextant (part of the OSS in SC 012) are simulated as part of the visuals.

The main purpose of the optics CDU is to convert hand controller inputs to usable shaft and trunnion angular positions to the SCM displays and angular position commands to the sextant and telescope programs. Figure 2-37 is a block diagram of the optics CDU drive simulation.

The maximum hand controller rates limits the rates for the trunnion and shaft CDU drives which may be commanded through the hand controller.

The hand controller output rates block computes the actual shaft and trunnion rates which are being commanded by the hand controller when it is out of its detent position.

If the mode switch is in the direct position, the incremental commands to the CDU block will generate commands to change the position of the CDU by integrating the rates solved for in the hand controller output rates. If it is in the resolved position, the rates will first be resolved into the proper frame and then integrated.

The commanded shaft and trunnion CDU angles are calculated by the corresponding block based on incremental commands and the mode selected by the astronaut. In the manual mode, the last commanded angle is changed by the amount designated by the incremental commands to CDU blocks. In the zero optics mode, the commanded CDU angles are decreased in a specific order ending with all three CDUs positioned to zero. This allows realistic indicator operation to the astronaut.

The shaft and trunnion CDU motor excitation block establishes power availability to the motor-tachs on the optical CDUs. This is a function of the mode selected and position of the hand controller.

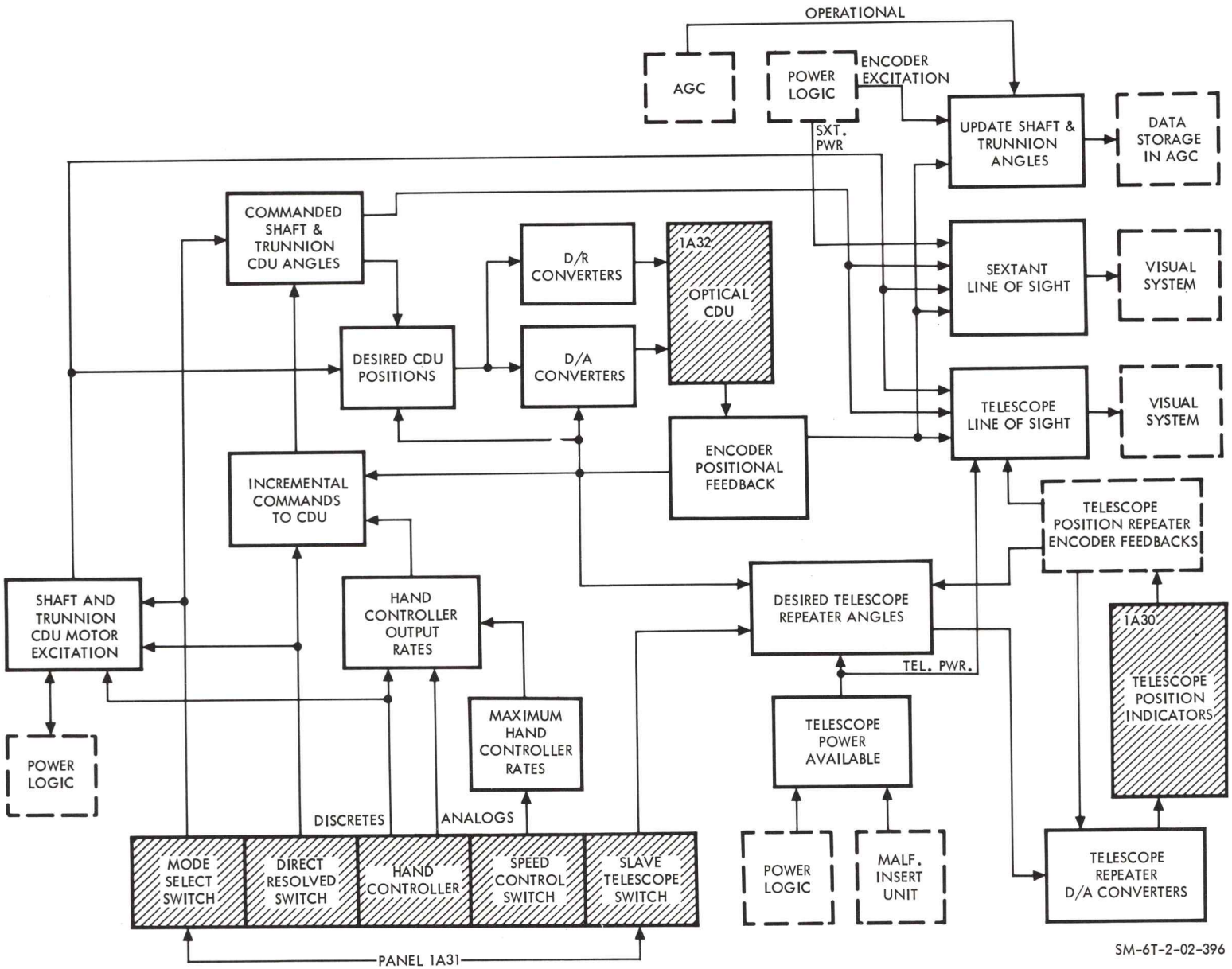

Figure 2-37. Optics CDU Drive

The desired position of the CDUs for the optics shaft and trunnion is calculated in the desired CDU position block. If power is applied to the motor-tach unit by the shaft and trunnion CDU motor excitation block, the commanded angle becomes the desired angle in the desired CDU position block. If power is not available, then the desired angle is the present position of the CDU. This information is obtained via the encoder positional feedback.

The D/R and D/A converter blocks compute the outputs to the D/R converters and D/A converters for use in driving the SCM CDUs to the desired CDU angle.

The telescope power available block provides simulated power output when 800 cps ±1 percent optics power is available and power to the telescope is not malfunctioned.

The desired telescope repeater angles outputs to the telescope position indicators. This enables the astronaut to see where the telescope is positioned with respect to the navigational base. The desired position for the shaft repeater is the same as the position of the shaft CDU when there is power to the telescope. When there is no power, the shaft indicator will be frozen in the position it was in when power was removed, unless the astronaut has engaged his universal tool and repositioned the indicator. Operation of the trunnion repeater is similar to that of the shaft except that the telescope is offset to either 0 or 25 degrees by use of the slave telescope switch in the SCM lower equipment bay. In this case, the desired position is that commanded by the slave telescope switch.

The telescope repeater D/A converters receive the desired telescope repeater angles, converts them to analog signals, and sends these analog signals to drive the telescope position indicators.

The telescope line of sight block computes the IOS and shaft and trunnion angles of the telescope which are sent to the visual subsystem for use in positioning the displays.

If the slave telescope switch is in the 0 or 25-degree offset position, the shaft and trunnion angles are the same as the telescope positional indicator encoder feedback. This will also be true if the telescope has no power.

If telescope power is on and the slave telescope switch is in the star IOS position, the shaft and trunnion angle outputs to the visual system are dependent upon shaft and trunnion CDU motor excitation availability. The commanded shaft and trunnion CDU angles will then be the output from the telescope line of sight block. If telescope power is not available, the CDU angles recorded by the encoder positional feedback will drive the visual system.

Sextant shaft and trunnion LOS angles are computed in the sextant line of sight block for output to the visual system. If sextant shaft and trunnion CDU motor excitation is removed, the sextant LOS will be frozen in its present position.

Normally, the sextant LOS is determined by the encoder-positioned feedback. When the optical CDU is driven by either the hand controller or the zero optics mode, the angles sent to the visual system are commanded shaft and trunnion CDU angles.

The update shaft and trunnion angles block updates the CDU shaft and trunnion angles stored in the AGC. When the AGC is on and operating, and the encoder excitation is present from the power logic, the change in CDU position is calculated and added to the previous position as stored in the AGC.

2.7 SEQUENTIAL EVENTS CONTROL SYSTEM (SECS).

The sequence control group consists of the master events sequence control (MESC), the earth landing system controller (ELSC), the service module jettison controller (SMJC), and the command module reaction control system controller (C/M RCSC). The purpose of these units is to control the sequencing of certain mission events as follows:

- Launch escape tower jettison
- LES low, medium, and high altitude aborts
- SPS abort
- C/M-S/M separation
- C/M descent sequence.

2.7.1 SEQUENTIAL EVENTS CONTROL SYSTEM CONFIGURATION REFERENCE.

The SECS simulation in the AMS is very close to the SECS in SC 012. There is, however, a MAIN DEPLOY AUTO MAN switch on panel 16 of SC 012 which is not included in the AMS. This switch will be used to inhibit automatic main chute deployment during aborts initiated below 5000 feet. This is done to ensure that the spacecraft does not drift back over land prior to touchdown. When manual chute deployment is selected in such an abort, the MAIN DEPLOY switch (panel 5) will be depressed at an altitude of 2000 feet. Figure 2-38 is a block diagram of the SC 012 SECS. Malfunction telemetry points simulated by the AMS are shown in the figure at their point of effect.

2.7.2 SEQUENCING EVENTS CONTROL SYSTEM.

The spacecraft sequencer and the simulated sequencer provide identical sets of interrelated electrical impulses on the basis of crew activity, events in other systems, and elapsed time. Therefore, a functional description of one is also a functional description of the other, and figure 2-38 is a block diagram of the sequencing systems simulation as well as the system simulated.

2.7.2.1 Launch-Boost and S-IV Separation Sequences.

Prior to launch, the MECS is enabled by the crew member by means of the MECS circuit breakers and ARM switches (MECS PYRO and MECS LOGIC). A simulated launch and ascent to orbit is described as follows.

At T -4 seconds the launch vehicle engines are ignited. The eight L/V ENGINE lights will extinguish upon simulation of 90-percent thrust in each engine. At T -0 all L/V ENGINE lights will be extinguished, and the LIFTOFF indicator will illuminate, simulating launch. At T +5 seconds, the LIFTOFF indicator will extinguish, as it is no longer needed. During the ascent, at T +42 seconds, the crew member at station 1 backs up the disabling of the auto-oxidizer dump by positioning the OX DUMP switch from AUTO OX DUMP to RCS CMD AUTO.

At T +2 minutes, both the 2 ENGINE OUT switch and the L/V RATES EXCESSIVE switch should be placed in the OFF positions. At approximately T +2 minutes, 20 seconds, L/V ENGINE lights 5 through 8 illuminate followed by L/V ENGINE lights 1 through 4 at T +2 minutes, 26 seconds. Two seconds later, all L/V ENGINE lights extinguish, except L/V ENGINE 1. This indicator monitors S-IVB thrusting and will again extinguish when the S-IVB 90 percent of maximum thrust is simulated at approximately T +2 minutes, 30 seconds. The TWR JETT switch should be activated at T +2 minutes, 50 seconds. This causes simulation of LES tower and motor removal. The EDS switch, panel 16, should then be placed in the OFF position. Upon orbit attainment, at approximately T +10 minutes, L/V ENGINE 1 light illuminates simulating S-IVB shutdown. It will remain illuminated until S-IVB separation. This separation is accomplished by selecting an attitude hold mode, placing the RCS CMD switch to the ON position, commanding a +X translation, and pressing the ADAP SEP switch. The crew member should then place the EDS POWER switch and the two MSCE switches (PYRO and LOGIC), panel 25, to the OFF position.

2.7.2.2 Earth Landing Sequence.

A normal descent from orbit is accomplished by, first, performing a G&N, SCS, or manual direct entry. This is followed by a manual activation of the ELS through the ELS LOGIC switch, panel 8, at an altitude of 50,000 feet. When the altitude decreases to 24,000 feet, a 0.4-second timer is started. The runout of this timer causes the apex cover to jettison. Two seconds later, the two drogue chutes are deployed. No ELS events occur between drogue deployment and main chute deployment at 10,000 feet.

Apex cover jettison, drogue chute deployment, and main chute deployment all have manual backup switches on panels. After main chute deployment, the remaining C/M RCS fuel and oxidizer are to be burned. This is accomplished through the C/M RCS JETT DUMP switch. Aural cues in the AMS simulate this burning. When all propellants have been burned, the helium in the C/M RCS is jettisoned through use of the C/M RCS JETT PURGE switch. This is indicated by decreasing helium pressure and C/M

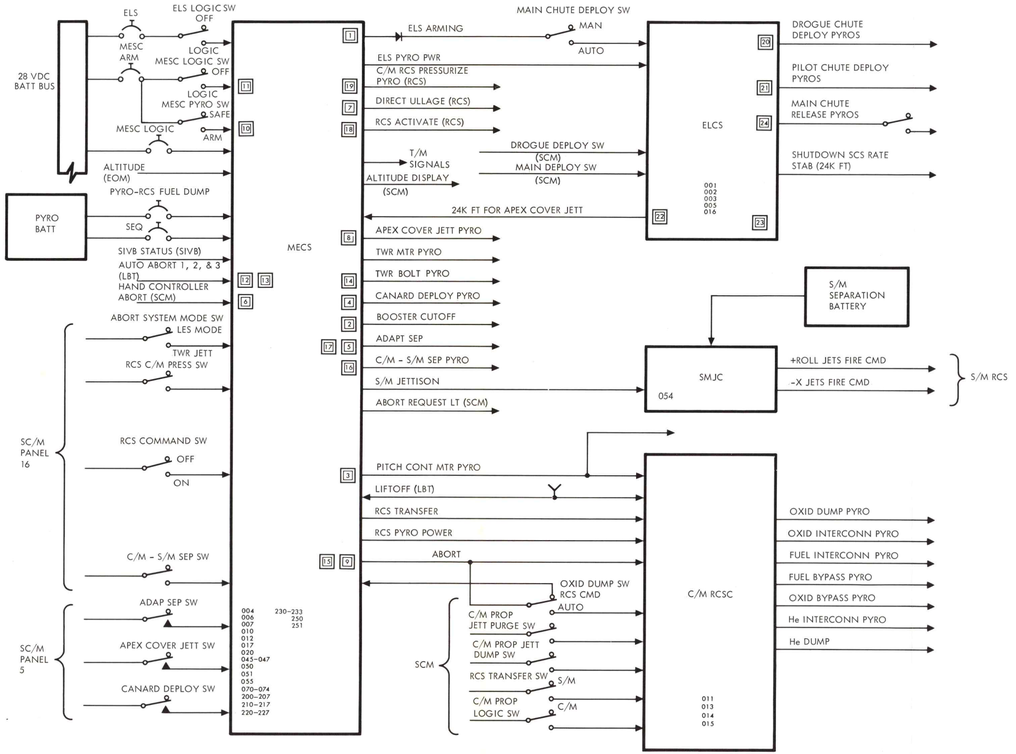

SEQUENCING SYSTEM T/M SIGNALS		
NO.	SIGNAL DESCRIPTION	T/M CODE
1	ELS SEQ START RELAY CLOSE A&B	CD0037X
2	BOOSTER CUTOFF SIGNAL A&B	CD0038X CD0044X
3	LAUNCH ESCAPE/PITCH CONT MTR FIRE INITIATE A&B	CD0045X CD0101X
4	CANARD DEPLOY A&B	CD0102X CD0120X
5	ADAPTER SEP A&B	CD0121X CD0127X
6	HAND CONTROLLER INPUT A&B	CD0128X CD0130X
7	DIRECT ULLAGE ON A&B	CD0131X CD0140X
8	FWD HEAT SHIELD JETT A&B	CD0141X CD0230X
9	EDS AUTO ABORT ENABLE A&B	CD0231X CD0315X
10	LES DC VOLTAGE PYRO BUS A&B	CD0316X CD0005V
11	LES DC VOLTAGE LOGIC BUS A&B	CD0006V CD0200V
12	EDS ABORT LOGIC INPUT 1, 2, & 3	CD0201V CD0132V CD0133V
13	EDS ABORT LOGIC OUT A&B	CD0134V CD0135X
14	TOWER JETTISON A&B	CD0136X CD0105X
15	LES ABORT INITIATE SIGNAL A&B	CD0106X CD0002X
16	CM-SM SEP RELAY CLOSE A&B	CD0062X CD0023X
17	ADAPT SEP RELAY CLOSE A&B	CD0024X CD0125X
18	RCS ACTIVATE SIGNAL A&B	CD0126X CD0170X
19	CM RCS PRESSURIZED SIGNAL A&B	CD0171X CD0173X
20	DROGUE DEPLOY RELAY CLOSE A&B	CD0174X CE0001X
21	MAIN CHUTE DEPLOY-DROGUE RELEASE RELAY CLOSE A&B	CE0002X CE0003X
22	BARO SWITCH LOCKIN RELAY A&B (25K FT BARO SW)	CE0004X CE0007X
23	BAROMETRIC PRESSURE STATIC REFERENCE	CE0008X CE0035P
24	MAIN CHUTE DISCONNECT RELAYS A&B	CE0321X CE0322X

SEQUENCING MALFUNCTIONS	
MALFUNCTION NO.	MALFUNCTION DESCRIPTION
GS-001	24,000 FOOT BARO SWITCHES FAIL OPEN
GS-002	TIME DELAY SWITCHES BEFORE DROGUE DEPLOY RELAYS FAIL (OPEN RELAY CIRCUIT)
GS-003	10,000 FOOT BARO SWITCHES FAIL OPEN
GS-004	SIVB/CSM STAGING FAILURE
GS-005	ELS XISTOR SWITCHES FAIL TO FIRE
GS-006	BAROMETRIC ALTIMETER FAIL (NO RESPONSE TO ALTITUDE CHANGES)
GS-007	BAROMETRIC ALTIMETER FAIL (ZERO INDICATION)
GS-010	APEX COVER FAILS TO JETTISON
GS-011	RCS CONTROL LATCHING RELAY FAILS TO CLOSE DURING SPS ABORT
GS-012	ANTENNA RELAY FAILS OPEN
GS-013	RCS COMMAND SWITCH FAILS TO OPERATE TO CONTROL RELAY WHEN IN ON POSITION
GS-014	AUTOMATIC TRANSFER FUNCTION FAILURE
GS-015	OXIDIZER DUMP/RCS CMD SWITCH FAILS OPEN IN THE RCS CMS POSITION
GS-016	MAIN CHUTE FAILS TO DEPLOY AUTOMATICALLY
GS-117	CANARDS FAIL TO DEPLOY AUTOMATICALLY
GS-020	ANGLE OF ATTACK INDICATOR FAILS TO ZERO
GS-045	ESCAPE TOWER FAILS TO JETTISON DURING LES ABORT (MISSION SEQUENCE FAILURES)
GS-046	TRANSLATIONAL CONTROLLER ABORT CIRCUITRY FAILURE
GS-047	MISSION SEQUENCER FAILS TO ARM ELS LOGIC DURING A LES ABORT
GS-050	C/M-S/M SEP BOLT FAILS
GS-051	LES TOWER JETTISON MOTOR HOT-WIRE IGNITION FAIL
GS-054	SPS ABORT PROGRAMMER 1.7 SECOND TIME DELAYS SWITCHES FAIL OPEN
GS-055	LES MOTOR FIRE XISTOR SWITCHES FAIL OPEN
GS-070	SCS - RCS CONTROL RELAY DRIVERS A&B FAIL TO TURN "ON"
GS-071	SCS - RCS CONTROL RELAY DRIVERS A&B FAIL TO TURN "OFF"
GS-072	C/M RCS PRESSURIZE MOTOR SWITCH SYSTEM A FAIL (OPEN WIRE)
GS-073	C/M RCS PRESSURIZE MOTOR SWITCH SYSTEM B FAIL (OPEN WIRE)
GS-074	ESCAPE TOWER SEPARATION XISTOR SWITCHES XISTOR FAIL
CS-200	999 SEC TIMER STOP
CS-201	ABORT REQUEST LIGHT FAIL ON OR SHORTED
CS-202	ABORT REQUEST LIGHT FAIL OFF OR OPEN WIRE
CS-203	BOOSTER ENGINE NO. 1 LIGHT FAIL ON OR SHORTED
CS-204	BOOSTER ENGINE NO. 1 LIGHT FAIL OFF OR OPEN WIRE
CS-205	BOOSTER ENGINE NO. 2 LIGHT FAIL ON OR SHORTED
CS-206	BOOSTER ENGINE NO. 2 LIGHT FAIL OFF OR OPEN WIRE
CS-207	BOOSTER ENGINE NO. 3 LIGHT FAIL ON OR SHORTED
CS-210	BOOSTER ENGINE NO. 3 LIGHT FAIL OFF OR OPEN WIRE
CS-211	BOOSTER ENGINE NO. 4 LIGHT FAIL ON OR SHORTED
CS-212	BOOSTER ENGINE NO. 4 LIGHT FAIL OFF OR OPEN WIRE
CS-213	BOOSTER ENGINE NO. 5 LIGHT FAIL ON OR SHORTED
CS-214	BOOSTER ENGINE NO. 5 LIGHT FAIL OFF OR OPEN WIRE
CS-215	BOOSTER ENGINE NO. 6 LIGHT FAIL ON OR SHORTED
CS-216	BOOSTER ENGINE NO. 6 LIGHT FAIL OFF OR OPEN WIRE
CS-217	BOOSTER ENGINE NO. 7 LIGHT FAIL ON OR SHORTED
CS-220	BOOSTER ENGINE NO. 7 LIGHT FAIL OFF OR OPEN WIRE
CS-221	BOOSTER ENGINE NO. 8 LIGHT FAIL ON OR SHORTED
CS-222	BOOSTER ENGINE NO. 8 LIGHT FAIL OFF OR OPEN WIRE
CS-223	L/V RATES LIGHT FAIL ON OR SHORTED
CS-224	L/V RATES LIGHT FAIL OFF OR OPEN WIRE
CS-225	L/V GUIDANCE LIGHT FAIL ON OR SHORTED
CS-226	L/V GUIDANCE LIGHT FAIL OFF OR OPEN WIRE
CS-227	LIFT-OFF LIGHT FAIL ON OR SHORTED
CS-230	LIFT-OFF LIGHT FAIL OFF OR OPEN WIRE
CS-231	EDS FAILS TO INITIATE A 2-ENGINE OUT ABORT
CS-232	AUTO ABORT ENABLE RELAY FAILURE
CS-233	DIGITAL EVENT TIMER FAILS TO START
CS-250	INSTRUCTOR INITIATED ABORT
CS-251	INSTRUCTOR AUTO ABORT INHIBIT

SM-6T-2-02-368

Figure 2-38. Sequencing Systems

RCS A, C/M RCS B, and MASTER CAUTION lights. Neither the CM RCS JETT DUMP nor the CM RCS JETT PURGE switch is active unless the CM RCS JETT LOGIC switch is on. This switch should be turned on prior to C/M-S/M separation after deorbit delta V.

2.7.2.3 Abort Sequences.

If an abort is to occur during ascent, it will be initiated by one of three conditions: EDS, through automatic abort; crew action in response to an abort request light, or crew action in response to observable spacecraft conditions. EDS aborts may be accomplished only by using booster tapes plus appropriate malfunctions, or booster tapes reflecting appropriate malfunctions. These malfunctions include L/V excessive rates, L/V guidance malfunction, L/V two engines out, and booster breakup. Crew procedures call for disabling the two-engine-out and L/V-rates automatic abort prior to S-IB/S-IVB staging. At launch escape tower jettison, all EDS automatic aborts are disabled automatically.

During an abort, neither the crew nor the IOS operator receives any direct indication of an abort occurrence unless the abort is the result of an abort request. At LES abort initiation, the crew and the IOS operator will receive aural cues, through the intercom, indicating the escape tower firing. At the same time, LES MTR FIRE and C/M-S/M separation will be simulated. The FDAI will also indicate rapid changes in S/C attitude during the abort. The C/M RCS is pressurized by the abort signal, and a rapid increase in system pressure indication is visible.

Oxidizer dump begins as the system becomes pressurized during aborts initiated before T +42 seconds (low altitude aborts). This is indicated by decreasing C/M RCS helium pressure. Eleven seconds after the abort is initiated, the LES canards are deployed. This will occur in all LES aborts regardless of altitude. The LES tower is automatically jettisoned 14 seconds after low altitude abort initiation. This will be manifested in the SCM by aural cues simulating pyrotechnics and uncovering of command module windows simulating boost cover removal with the tower. If the tower is not jettisoned automatically at this time, the crew member should manually override the function by placing the ABORT SYSTEM MODE switch to the TWR JETT SPS MODE position. Drogue chute deployment at 16 seconds after abort initiation is simulated in the AMS by aural cues simulating drogue mortar fire and by signals sent out of the ELSC to the EOM and AFM programs. Main chute deployment at 28 seconds after abort initiation is simulated in the same way as drogue chute deployment. Both drogue chute and main chute deployment have manual backup switches on panel 16 of the SCM. During low altitude aborts initiated more than 42 seconds after lift-off, the sequence of events will be the same as above except that main chutes will deploy at 10,000 feet rather than as a timed function. Also C/M RCS oxidizer is not dumped at abort initiation but will be burned, along with RCS fuel, after main chute deployment. From main chute deployment to touchdown, low altitude aborts initiated more than 42 seconds after lift-off are the same as the normal entry sequence.

During medium altitude aborts (24,000 feet to 120,000 feet), the LET is not jettisoned until altitude decreases to 24,000 feet. Four seconds after tower jettison, drogue chutes are deployed. From this point on, the sequence of events will be the same as those in a normal entry.

During high altitude (120,000 feet to TWR JETT) aborts the LET should be manually jettisoned between 6 and 15 seconds after abort initiation. The C/M should be manually oriented to the entry attitude and the SCS or G&N entry mode selected. From this point on, the sequence of events will be the same as those in a normal entry.

If an abort is initiated after tower jettison, it automatically becomes an SPS abort. All SPS aborts must be manually initiated from the command module. This immediately causes booster engine shutdown and a direct ullage. After a 1.7-second delay, to allow booster thrust to decay, adapter separation is commanded. Roll stabilization is enabled 0.8 second later. After a normal ullage maneuver, the SPS engine is manually fired. From this point on, the normal entry procedures are followed.

The MECS automatically performs C/M-S/M separation during all aborts, except SPS aborts. This entails pressurizing the C/M RCS, transferring SCS attitude commands to the C/M RCS, and initiating C/M-S/M physical separation. In order for the C/M RCS to receive SCS attitude commands, the CM RCS JETT switch must be on. In case of SPS abort or normal entry, C/M-S/M separation is manually initiated through the C/M-S/M SEP switch (panel 5).

2.8 TELECOMMUNICATIONS SYSTEMS.

2.8.1 TELECOMMUNICATIONS SYSTEMS CONFIGURATION REFERENCE.

The telecommunications systems simulated in the AMS closely approximate those AF 012. An explanation of the differences between AF 012 and the AMS follows.

The HF ANTENNA switch, panel 17 of the AMS command module, is in S/C 012. This is caused by the deletion of the H-F orbital communications capability. The AMS has no UP TLM CMD switch. This switch is located on panel 19 of S/C 012 and is used to reset those real-time commands for which the command module has controls. This allows the spacecraft systems to return to the status selected by the command module switches. Only 10 tracking stations are simulated in the AMS. They are listed in table 3-5 and geographically illustrated in figures 3-4 through 3-19.

The computer will determine when each simulated station may transmit to or receive from the vehicle on the basis of their relative positions. Although a Corpus Christi ground station is simulated, no actual station is located at that point. The locations of the insertion, injection, and reentry ships are at variance with planned locations for these ships during Mission 204A.

Figure 2-39 is a block diagram of the spacecraft telecommunications systems simulated by the AMS. The figure includes the R-F carrier systems (transmit and receive) and the modulating, demodulating, coding, decoding, antenna, switching systems used to accomplish the up-data link to the PCM telemetry, and the voice links between the spacecraft and MSFN. Also included in the diagram are the simulated telecommunications malfunctions and their point of effect in the simulator equivalent of the system.

2.8.2 TELECOMMUNICATIONS SYSTEMS SIMULATION.

The AMS simulation of the telecommunications systems is accomplished by complete simulation of modulation intelligence but does not include actual or simulated R-F characteristics. However, a capability is provided to simulate the effects of actual radio system attenuation, distortion, and interference on modulation intelligence. Also, malfunction simulation includes the failure of R-F carrier components on modulation intelligence in various telecommunications links.

2.8.2.1 VHF/AM Simulation.

During simulated near-earth operations, voice communications are carried on via the VHF/AM equipment. Upcoming VHF/AM voice information is simulated by an audio signal from IMCC during the integrated mode of operation. As shown in figure 2-70, this signal is mixed with noise from the noise generator after energizing a VOX switch. The signal is then subjected to distortion in the garble control. The amount of garble and noise is controlled manually through the VHF/AM noise and garble controls on the IOS. From this point, the audio signal is sent through VHF/AM, TR/REC switch contacts at each astronaut's audio center to three mixers.

If the AMS is in the nonintegrated mode, the simulated VHF audio signal is furnished by the IOS instructor-operator. The audio signal is then fed into the VOX voltage control amplifier and VOX switch contacts. From this point, the audio signal is treated the same as the integrated mode VHF/AM signal. Up-link VHF/AM voice includes earth to S/C and LEM to S/C signals, both of which will be simulated.

2.8.2.2 S-Band Simulation.

S-band up-voice (figure 2-70) enters the AMS from IMCC during integrated mode, or the IOS in the nonintegrated mode, and is sent through a delay unit. This unit consists of a continuous loop tape recorder. The audio signal is recorded on one head and played back by a second head. The delay is a function of tape speed between the two heads. This speed is controlled by the AMS computer and is representative of the distance between the S/C and earth. A third head, the erase head, is located after the playback head and prepares the tape for its next recording cycle. This delay will not be noticeable during Mission 204A. However, during later missions at greater distances from earth, this delay will be necessary for accurate simulation of voice communications.

Noise simulation on the S-band audio signal is accomplished manually by the S-band noise control on the IOS.

The garble control for the S-band signal is much the same as the garble control for the VHF/AM signal, although the amount of garble, as the amount of noise, may be different because of the inherent qualities of different types of transmission. From the garble control, the voice signal simulating the S-band up-voice is sent through switch contacts controlled from each astronaut's audio center.

Transmission of down-link data and voice via S-band is simulated in the AMS without introduction of noise, garble, or delay. Voice signals are sent to the IOS or the IOS and MSCC, depending on simulation mode (nonintegrated or integrated). Data signals from the simulator command module are sent to the T/M console. The T/M console operation is explained in detail in section 2.14.4.

2.8.2.3 UHF/FM Simulation.

The UHF/FM receiver in the command module receives UDL information only. No degradation of the carrier signal through noise, garble, or fade insertion is simulated. However, malfunctions may be inserted to simulate improper signal reception. This simulation is explained in paragraph 2.8.2.5 and 2.14.2.

2.8.2.4 HF Simulation.

After entry and landing, the communications systems serve two purposes, voice communications and beacon. The H-F transceiver is the prime unit providing these functions because of its capability of operating beyond line-of-sight. The VHF/AM provides backup for voice communications, whereas the VHF-BCN backs up the H-F beacon.

The AMS simulation of the C/M H-F voice reception is equipped with noise and garble insertion capabilities.

2.8.2.5 Up-Data Link Nonintegrated Mode.

Figure 2-40 is a block diagram of the AMS up-data link simulation in the nonintegrated mode. During nonintegrated operation, UDL simulation is accomplished by manipulation of the UP DATA LINK panel of the IOS. As the actual MSCC is not used, the UDL messages sent to the UDL decoder are in uncoded format rather than the MSCS subbits. Message contents will be the same as in the integrated mode, that is, vehicle address, system address, and information bits.

The four select buttons (RTC, G&N, CTE, and DATA DISPLAY) are interlocked to prevent selection of more than one system at a time. The panel will remain in the selected mode until the KEYBOARD CLEAR button is depressed, unlatching the selected system and resetting the panel.

TELEMETRY POINTS		
NO.	SIGNAL DESCRIPTION	T/M CODE
1	SIG COND POS SUPPLY VOLTS	CT0015V
2	SIG COND NEG SUPPLY VOLTS	CT0016V
3	SENSOR EXCITATION 5 VOLTS	CT0017V
4	SENSOR EXCITATION 10 VOLTS	CT0018V
6	C-BAND TRANSMITTER OUTPUT MONITOR	CT0089V
7	C-BAND DECODER OUTPUT-NORMALIZED	CT0098V
8	GAS CHROMATOGRAPH TRACE DETECTED	CT0108K
9	PCM REFERENCE LEVEL (85% - HI)	CT0125V
	PCM REFERENCE LEVEL (15% - HI)	CT0126V
	PCM REFERENCE LEVEL (85% - LO)	CT0127V
	PCM REFERENCE LEVEL (15% - LO)	CT0128V
10	S-BAND REC AGC VOLTAGE	CT0147V
11	VHF/AM REC AGC VOLTAGE	CT0191V
12	S-BAND TRANSMITTER DETECTED RF OUTPUT	CT0215V
13	S-BAND P.A. DETECTED RF OUTPUT	CT0222V
14	UDL RECEIVER SIGNAL STRENGTH	CT0261V
15	VHF/AM TRANSMITTER DETECTED RF OUTPUT	CT0320V
16	VHF/FM TRANSMITTER DETECTED RF OUTPUT	CT0330V
18	S-BAND RECEIVER STATIC PHASE ERROR	CT0212V
19	CTE TIMING MODE MONITOR	CT0141X
20	S-BAND ANTENNA DEPLOY MONITOR	CT0154X
21	PCM TIMING SOURCE EXT. OR INT.	CT0340X
22	RESET COINCIDENCE	CT0342X
23	PCM BIT RATE CHANGE-8 BITS	CT0120X
24	CENTRAL TIMING GMT-32 BITS	CT0142F
25	S-BNAD HI-GAIN ANTENNA POS-PITCH	CT0152H
26	S-BAND HI-GAIN ANTENNA POS.-YAW	CT0153H
27	UDL SYSTEM VELOCITY SIGNAL - 8 BITS	CT0262H

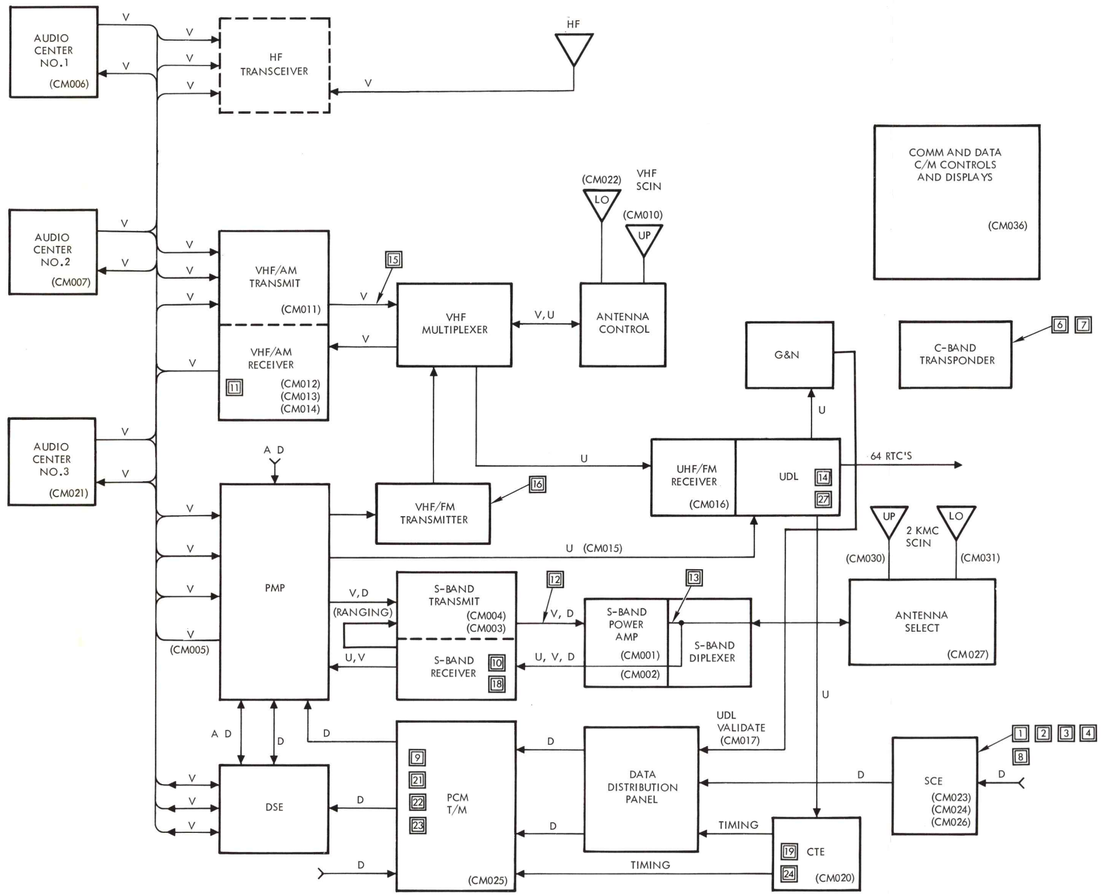

TELECOMMUNICATION MALFUNCTION	
MALF. NO.	MALFUNCTION DESCRIPTION
CM 001	S-BAND POWER AMP (20 W.) FAIL
CM 002	S-BAND POWER AMP (5 W.) FAIL
CM 003	S-BAND NORMAL DOWN VOICE FAIL
CM 004	S-BAND EMERGENCY DOWN VOICE FAIL
CM 005	S-BAND UP VOICE FAIL
CM 006	ASTRO #1 AUDIO CENTER FAIL
CM 007	ASTRO #2 AUDIO CENTER FAIL
CM 010	UPPER VHF SCIMITER ANTENNA FAIL (OPEN CIRCUIT)
CM 011	VHF/AM DOWN VOICES FAIL
CM 012	VHF/AM UP VOICE FAIL
CM 013	VHF/AM NO. 2 RECEIVER FREQUENCY FAIL
CM 014	VHF/AM NO. 1 RECEIVER FREQUENCY FAIL
CM 015	UP-DATA S-BAND FAIL
CM 016	UP-DATA UHF/FM RECEIVER FAIL
CM 017	UP-DATA LINK VALIDATION FAIL
CM 020	CTE XTAL OSC FAIL
CM 021	ASTRO #3 AUDIO CENTER FAIL
CM 022	LOWER VHF SCIMITER ANTENNA FAIL (OPEN CIRCUIT)
CM 023	SIGNAL CONDITIONER + 5 VDC FAIL
CM 024	SIGNAL CONDITIONER INTERNAL POWER FAIL
CM 025	PCM FAIL
CM 026	SIGNAL COND +10 VDC FAIL
CM 027	AUTOMATIC SELECT OF S-BAND OMNI- ANTENNAS FAIL
CM 030	UPPER S-BAND OMNI ANTENNA FAIL
CM 031	LOWER S-BAND OMNI ANTENNA FAIL
CM 036	S-BAND "TUNE FOR MAX" METER FAIL
CM 043	COMPLETE C-BAND FAIL
CM 044	VHF/FM TRANSMITTER FAIL
CM 045	COMPLETE CTE FAIL
CM 046	C-BAND TRANSPONDER FAIL OVERHEAT
CM 047	VHF RECOVERY BEACON FAIL SHORT OR OVERLOAD
CM 054	S-BAND TV CKT FAIL SHORT OR OVERLOAD
CM 055	HF SCVR EQUIP FAIL SHORT OR OVERLOAD
CM 057	PMP EQUIP FAIL SHORT OR OVERLOAD

SIGNAL INDEX

AD = ANALOG DATA
D = DATA
V = VOICE
U = UP-DATA

SM-6T-2-02-305A

Figure 2-39. Telecommunications System Block Diagram

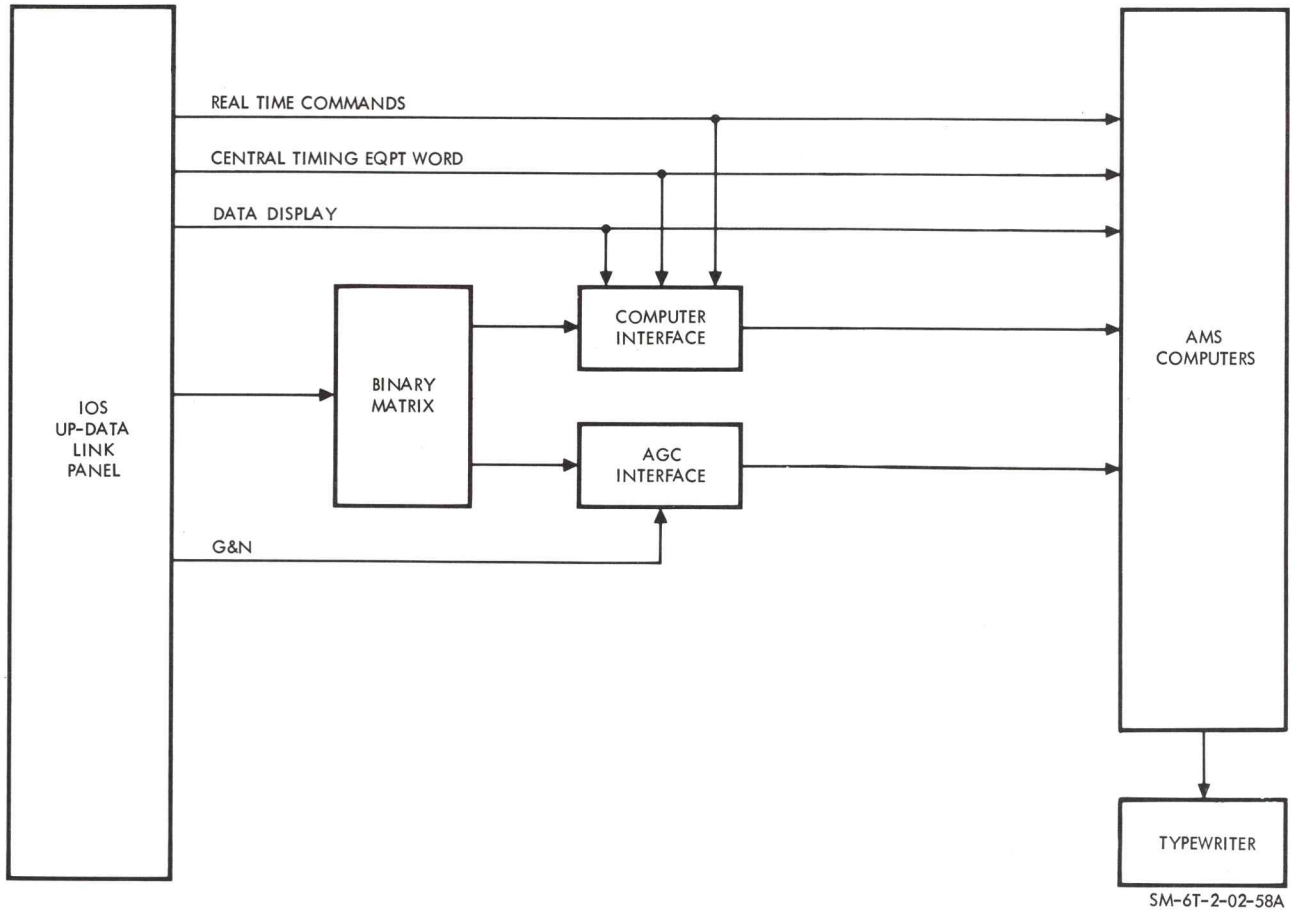

Figure 2-40. Up-Data Link Simulation, Non-Integrated Mode

Depressing the RTC or CTE selector switch informs the computer of the type message upcoming and connects the nonintegrated panel controls to the computer. The same type operation occurs when the G&N selector switch is activated, except that the UDL word will be fed to that section of the AMSC which is simulating the S/C AGC.

After the vehicle and system addresses have been determined, the remainder of the up-data word is made up by successive depressions of the NOUN, VERB, PLUS, MINUS, and 0 through 9 keys on the UDL panel. The word is then entered through a binary matrix, interface networks, and digital bit input circuits.

2.9 C/M AND S/M REACTION CONTROL SYSTEMS (RCS).

2.9.1 RCS CONFIGURATION REFERENCE.

The C/M and S/M RCS systems of the AMS accurately simulate the reaction control systems in AF 012. Schematic diagrams of the C/M RCS and S/M RCS are shown in figures 2-41 and 2-42, respectively. AMS malfunctions which may be inserted into the simulated RCS systems are indicated at their points of effect in the AF 012 RCS diagrams.

2.9.2 C/M AND S/M REACTION CONTROL SYSTEMS SIMULATION.

A block diagram of the equations for simulation of C/M RCS systems A and B and S/M RCS systems A, B, C, and D is provided in figure 2-43. These equations consider crew and system inputs plus malfunction inputs from the IOS. Malfunction inputs are not shown in the block diagram in order to simplify the drawing. The malfunction insertion points may be seen in actual RCS diagrams (figures 2-41 and 2-42).

The input signals are used in computing such system variables as temperature, pressure, propellant quantity, valve status, etc. Outputs from these blocks are used primarily by the RCS integration and indicator drive blocks.

The RCS integration and indicator drive block is basically concerned with generating variables which are dependent on outputs from, or are required as inputs to, the C/M RCS or S/M RCS blocks. This block also calculates sensor and indicator malfunction effects and modifies the valve status developed in the C/M RCS and S/M RCS blocks to provide the necessary indicator drives and telemetry outputs.

Switches on panels 5, 15, and 16 and circuit breakers on panel 25 of the SCM contribute the crew inputs to the RCS program in the AMS. They enable the program to establish the condition of each of the two C/M and four S/M RCS systems. The three sections of the RCS program consider these switch and circuit breaker inputs in determining the simulated status and availability of each RCS reaction jet. The status of each RCS system is sent to the C&W system and is displayed on panel 12 in the SCM and at the

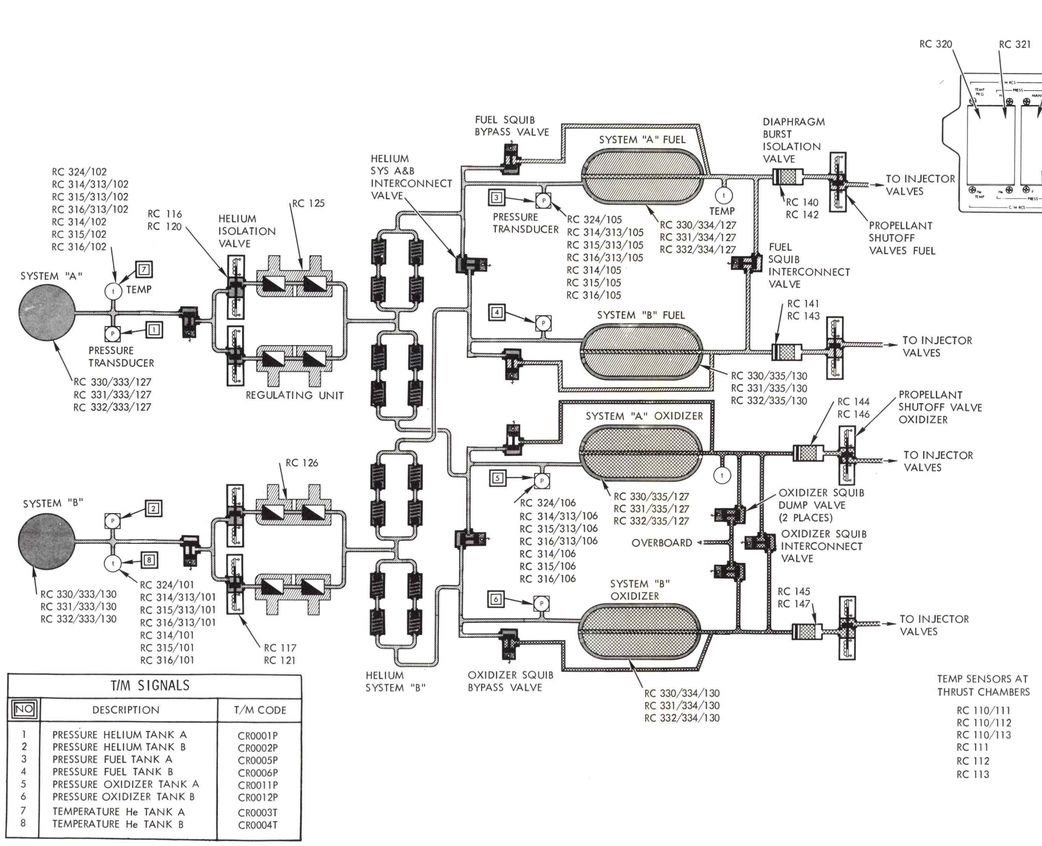

T/M SIGNALS		
NO	DESCRIPTION	T/M CODE
1	PRESSURE HELIUM TANK A	CR0001P
2	PRESSURE HELIUM TANK B	CR0002P
3	PRESSURE FUEL TANK A	CR0005P
4	PRESSURE FUEL TANK B	CR0006P
5	PRESSURE OXIDIZER TANK A	CR0011P
6	PRESSURE OXIDIZER TANK B	CR0012P
7	TEMPERATURE He TANK A	CR0003T
8	TEMPERATURE He TANK B	CR0004T

C/M AND S/M INDICATORS

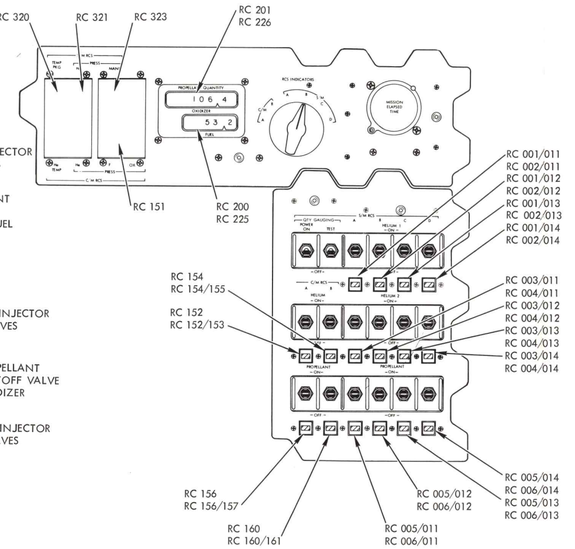

RC 125 - C/M PRIM. HE PRESS. REGULATOR FAIL OPEN-C/M SYSTEM A.

RC 126 - C/M PRIM. HE PRESS. REGULATORS FAIL OPEN-C/M SYSTEM B.

RC 151 - C/M FUEL TANK PRESSURE METER FAILS OPEN.

RC 200 - S/M FUEL QUANTITY METER FAILS TO DECREASE ITS READING WHEN S/M RCS IS USED.

RC 201 - S/M OXIDIZER QUANTITY METER FAILS TO DECREASE ITS READING WHEN S/M RCS IS USED.

RC 225 - S/M FUEL QUANTITY METER FAILS-NO INDICATION.

RC 226 - S/M OXIDIZER QUANTITY METER FAILS-NO INDICATION.

RC 320 - S/M-C/M PACKAGE TEMP METER FAILS OPEN.

RC 321 - HELIUM STORAGE TANK PRESS. METER FAILS OPEN.

RC 323 - OXIDIZER & MANIFOLD PRESS. METER FAILS OPEN.

HELIUM ISOLATION VALVE INDICATOR FAILS		
1	ON	OFF
S/M A #1 S/M B #1 S/M C #1 S/M D #1	RC 001/011 RC 001/012 RC 001/013 RC 001/014	RC 002/011 RC 002/012 RC 002/013 RC 002/014
C/M A C/M B	RC 152 RC 154	RC 153 RC 155

HELIUM ISOLATION VALVE #2 INDICATOR FAILS		
2	ON	OFF
S/M A S/M B S/M C S/M D	RC 003/011 RC 003/012 RC 003/013 RC 003/014	RC 004/011 RC 004/012 RC 004/013 RC 004/014

PROPELLANT ISOLATION VALVE POSITION IND. FAILS		
3	ON	OFF
S/M A S/M B S/M C S/M D C/M A C/M B	RC 005/011 RC 005/012 RC 005/013 RC 005/014 RC 156 RC 160	RC 006/011 RC 006/012 RC 006/013 RC 006/014 RC 157 RC 161

C/M RCS SYS A&B TEMP CONTROL		
4	INCREASE	DECREASE
10° 15° 15°	RC 110/111 RC 110/112 RC 110/113	RC 111 RC 112 RC 113
THESE MALFS MAY BE COMBINED TO PROVIDE A MAX OF 40° INCREASE OR DECREASE.		

C/M He ISOLATION VALVES FAIL		
5	OPEN	CLOSED
C/M A	RC 120	RC 116
C/M B	RC 121	RC 117

C/M ISOLATION VALVES FAIL				
6	FUEL		OXIDIZER	
	OPEN	CLOSED	OPEN	CLOSED
C/M A	RC 142	RC 140	RC 146	RC 144
C/M B	RC 143	RC 141	RC 147	RC 145

7	C/M RCS SYSTEM A		C/M RCS SYSTEM B	
SENSOR OUTPUT	He STORAGE TANK PRESS. SENSOR FAILS	OXIDIZER TANK PRESS. SENSOR FAILS	He STORAGE TANK TEMP SENSOR FAILS	FUEL TANK PRESS. SENSOR FAILS
ZERO	RC 324/102	RC 324/106	RC 324/101	RC 324/105
1/7TH HIGH	RC 314/313/102	RC 314/313/106	RC 314/313/101	RC 314/313/105
2/7TH HIGH	RC 315/313/102	RC 315/313/106	RC 315/313/101	RC 315/313/105
4/7TH HIGH	RC 316/313/102	RC 316/313/106	RC 316/313/101	RC 316/313/105
1/7TH LOW	RC 314/102	RC 314/106	RC 314/101	RC 314/105
2/7TH LOW	RC 315/102	RC 315/106	RC 315/101	RC 315/105
4/7TH LOW	RC 316/102	RC 316/106	RC 316/101	RC 316/105
NOTE: THESE MALFS MAY BE COMBINED TO PROVIDE A MAXIMUM OF 7/7TH HIGH OR LOW SENSING.				

8	HELIUM STORAGE TANK LEAK		FUEL TANK ULLAGE He LEAK		OXID TANK ULLAGE He LEAK	
LEAKAGE RATE	C/M A	C/M B	C/M A	C/M B	C/M A	C/M B
1/7TH MAX	RC 330/333/127	RC 330/333/130	RC 330/334/127	RC 330/334/130	RC 330/335/127	RC 330/335/130
2/7TH MAX	RC 331/333/127	RC 331/333/130	RC 331/334/127	RC 331/334/130	RC 331/335/127	RC 331/335/130
4/7TH MAX	RC 332/333/127	RC 332/333/130	RC 332/334/127	RC 332/334/130	RC 332/335/127	RC 331/335/130
NOTE: THESE MALFS MAY BE COMBINED TO PROVIDE A 7/7 MAX. LEAKAGE.						

SM-6T-2-02-312A

Figure 2-41. C/M Reaction Control System

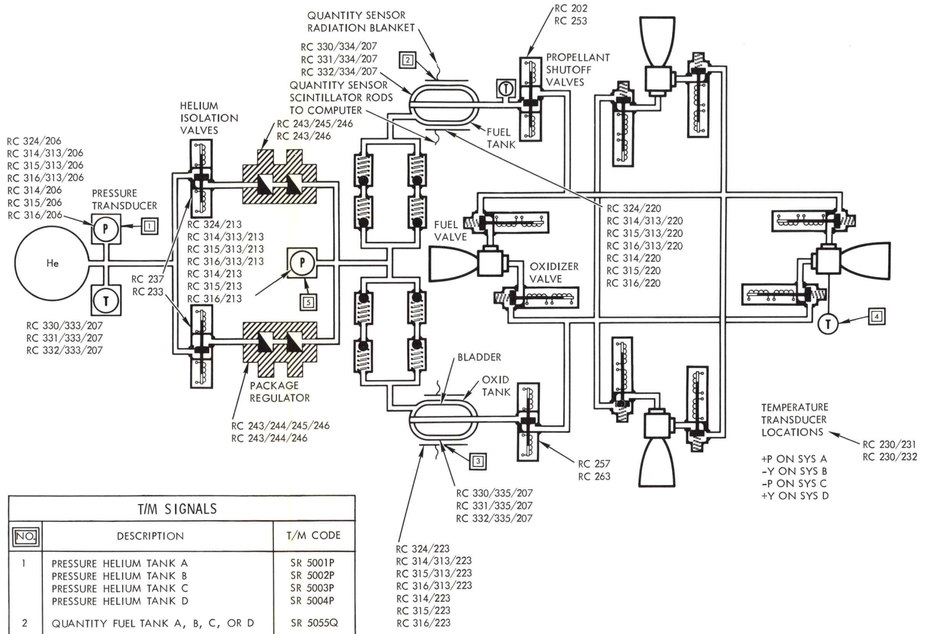

T/M SIGNALS		
NO.	DESCRIPTION	T/M CODE
1	PRESSURE HELIUM TANK A PRESSURE HELIUM TANK B PRESSURE HELIUM TANK C PRESSURE HELIUM TANK D	SR 5001P SR 5002P SR 5003P SR 5004P
2	QUANTITY FUEL TANK A, B, C, OR D	SR 5055Q
3	QUANTITY OXIDIZER TANK, A,B, C OR D	SR 5056Q
4	TEMP ENGINE PACKAGE A1 TEMP ENGINE PACKAGE B1 TEMP ENGINE PACKAGE C1 TEMP ENGINE PACKAGE D1	SR 5065T SR 5066T SR 5067T SR 5068T
5	PRESSURE HELIUM MANIFOLD A PRESSURE HELIUM MANIFOLD B PRESSURE HELIUM MANIFOLD C PRESSURE HELIUM MANIFOLD D	SR 5729P SR 5776P SR 5817P SR 5830P

9	ISOLATION VALVE FAILURES					
RCS SYSTEM	HELIUM		FUEL		OXIDIZER	
	BOTH OPEN	BOTH CLOSED	OPEN	CLOSED	OPEN	CLOSED
S/M A	RC 233	RC 237	RC 202	RC 253	RC 263	RC 257
S/M B	RC 234	RC 240	RC 203	RC 254	RC 264	RC 260
S/M C	RC 235	RC 241	RC 204	RC 255	RC 265	RC 261
S/M D	RC 236	RC 242	RC 205	RC 256	RC 266	RC 262

10	PRESSURE REGULATOR FAILURES			
RCS SYSTEM	PRIMARY SERIES REGULATOR		REDUNDANT SERIES REGULATOR	
	FULL OPEN	CLOSED	FULL OPEN	CLOSED
S/M A	RC 243/244/245/246	RC 243/244/246	RC 243/245/246	RC 243/246
S/M B	RC 243/244/245/247	RC 243/244/247	RC 243/245/247	RC 243/247
S/M C	RC 243/244/245/250	RC 243/244/250	RC 243/245/250	RC 243/250
S/M D	RC 243/244/245/251	RC 243/244/251	RC 243/245/251	RC 243/251

11		LEAKAGE RATE	S/M RCS SYS A	S/M RCS SYS B	S/M RCS SYS C	S/M RCS SYS D
HELIUM LEAKAGE	STORAGE TANK	1/7TH MAX	RC 330/333/207	RC 330/333/211	RC 330/333/212	RC 330/333/214
		2/7TH MAX	RC 331/333/207	RC 331/333/211	RC 331/333/212	RC 331/333/214
		4/7TH MAX	RC 332/333/207	RC 331/333/211	RC 332/333/212	RC 332/333/214
	FUEL TANK ULLAGE	1/7TH MAX	RC 330/334/207	RC 330/334/211	RC 330/334/212	RC 330/334/214
		2/7TH MAX	RC 331/334/207	RC 331/334/211	RC 331/334/212	RC 331/334/214
		4/7TH MAX	RC 332/334/207	RC 332/334/211	RC 332/334/212	RC 332/334/214
	OXIDIZER TANK ULLAGE	1/7TH MAX	RC 330/335/207	RC 330/335/211	RC 330/335/212	RC 330/335/214
		2/7TH MAX	RC 331/335/207	RC 331/335/211	RC 331/335/212	RC 331/335/214
		4/7TH MAX	RC 332/335/207	RC 332/335/211	RC 332/335/212	RC 332/335/214
(SEE NOTE)						

12	SENSOR FAILURES (SEE NOTE)			
SENSOR OUTPUT	S/M RCS SYSTEM A		S/M RCS SYSTEM B	
	OXIDIZER QUANTITY	He RESERVOIR PRESS.	OXIDIZER QUANTITY	He RESERVOIR PRESS.
ZERO	RC 324/223	RC 324/206	RC 324/224	RC 324/210
1/7TH HIGH	RC 314/313/223	RC 314/313/206	RC 314/313/224	RC 314/313/210
2/7TH HIGH	RC 315/313/223	RC 315/313/206	RC 315/313/224	RC 315/313/210
4/7TH HIGH	RC 316/313/223	RC 316/313/206	RC 316/313/224	RC 316/313/210
1/7TH LOW	RC 314/223	RC 314/206	RC 314/224	RC 314/210
2/7TH LOW	RC 315/223	RC 315/206	RC 315/224	RC 315/210
4/7TH LOW	RC 316/223	RC 316/206	RC 316/224	RC 316/210

13	SENSOR FAILURES (SEE NOTE)			
SENSOR OUTPUT	S/M RCS SYSTEM B		S/M RCS SYSTEM D	
		He MANIFOLD PRESS		He MANIFOLD PRESS
ZERO		RC 324/213		RC 324/215
1/7TH HIGH		RC 314/313/213		RC 314/313/215
2/7TH HIGH		RC 315/313/213		RC 315/313/215
4/7TH HIGH		RC 316/313/213		RC 316/313/215
1/7TH LOW		RC 314/213		RC 314/215
2/7TH LOW		RC 315/213		RC 315/215
4/7TH LOW		RC 316/213		RC 316/215

14	S/M RCS SYSTEM A, B, C, & D CONTROL TEMP
INCREASE 10° INCREASE 20°	RC 230/231 RC 230/232
THESE MALF MAY BE COMBINED TO PROVIDE A MAX. OF 30° INCREASE	

15	FUEL QUANTITY SENSOR FAILURES	
SENSOR OUTPUT	S/C RCS SYS C	S/M RCS SYS D
ZERO	RC 324/220	RC 324/221
1/7TH HIGH	RC 314/313/220	RC 314/313/221
2/7TH HIGH	RC 315/313/220	RC 315/313/221
4/7TH HIGH	RC 316/313/220	RC 316/313/221
1/7TH LOW	RC 314/220	RC 314/221
2/7TH LOW	RC 315/220	RC 315/221
4/7TH LOW	RC 316/220	RC 316/221
(SEE NOTE)		

NOTE: THESE MALFUNCTIONS MAY BE COMBINED TO PROVIDE ANY LEAKAGE RATE OR SENSOR OUTPUT FROM 1/7 TO 7/7 IN INCREMENTS OF 1/7.

SM-6T-2-02-313A

Figure 2-42. S/M Reaction Control System

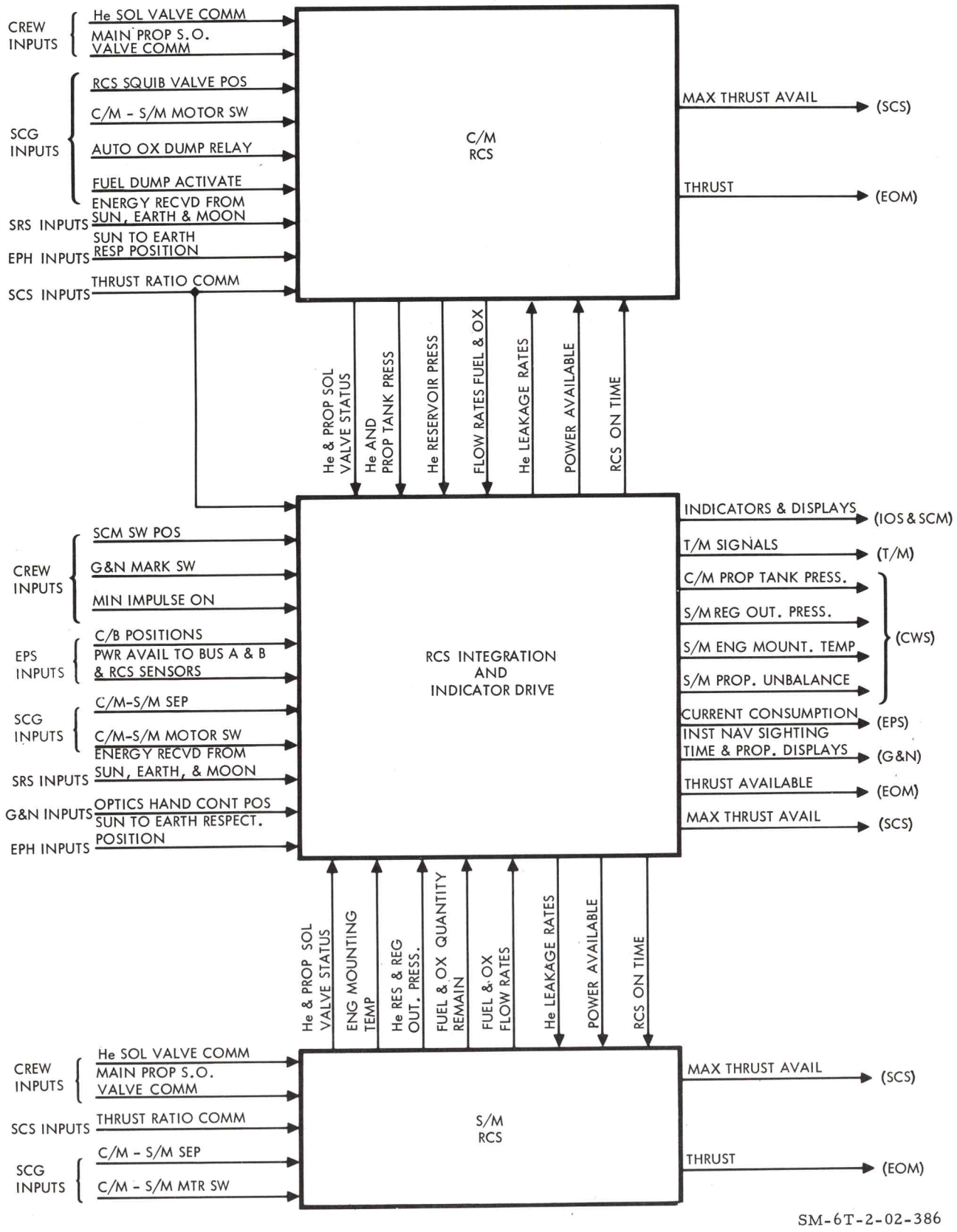

Figure 2-43. C/M and S/M Simulation

IOS. Inputs from the SCS simulation programs control selection and firing time for each reaction jet. Integration of the firing time of each system computes propellants remaining for display in the SCM and at the IOS and for use in other computations.

If malfunctions are inserted to cause the pressure or temperature in any RCS system to go out of tolerance, a warning indicator will illuminate on SCM panel 10 and at the IOS. These warning indications occur in the C&W system as a result of signals out of the RCS integration and indicator drive block. For further clarification on which malfunction has occurred, the crew must analyze the indications available at SCM panel 12. Helium and propellant pressures are affected by crew operation of the helium solenoid and main propellant shutoff valves. Sequencer inputs commanding C/M system activation, oxidizer dump and fuel dump also affect the CM RCS simulated pressure. Inputs from the ephemeris program and the space radiator system program determine the temperature of each RCS system. These inputs indicate the amount of heat which will be gained by each RCS system caused by light radiation from the sun and/or the earth.

When operated by the crew, each of the helium isolation valves (eight in the S/M and two in the C/M) and each of the propellant isolation valves (four in the S/M and two in the C/M) cause the commanded function to be simulated in the C/M RCS or S/M RCS block. Signals are fed through the RCS integration and indicator drive block activating talk-back indicators in the SCM and at the IOS. This provides the crew (and the instructor) with visual indications of the simulated position of each valve.

2.10 SERVICE PROPULSION SYSTEM.

The SPS provides the thrust required for all major velocity changes after separation from the launch vehicle. Such changes include planar changes, orbital altitude changes, and retrograde from earth orbit. The SPS consists of a rocket engine, a propellant storage system and distribution network, and a propellant utilization control system. Figure 2-44 is a block diagram of the SPS in AF 012. This diagram includes simulated telemetry points and malfunctions available in the AMS.

2.10.1 SERVICE PROPULSION SYSTEM CONFIGURATION REFERENCE.

The SPS programed in the AMS accurately simulates the SPS in AF 012 at the time this handbook is being prepared.

2.10.2 SERVICE PROPULSION SYSTEM SIMULATION.

The SPS simulation is accomplished by means of component function simulation, rather than the cause and effect simulation. This permits the combining or compounding of multiple malfunctions within a given subsystem. The SPS simulation is divided into two sections. The dynamic simulation section simulates propellant and helium masses, flows, flow rates, etc. The propellant utilization section simulates control of the propellant burn rate.

TELEMETRY POINTS		
NO.	SIGNAL DESCRIPTION	T/M CODE
1	PRESSURE HELIUM TANKS	SP0001P
2	TEMPERATURE HELIUM TANKS	SP0002T
3	PRESSURE OXIDIZER TANKS	SP0003P
4	PRESSURE FUEL TANKS	SP0006P
5	PRESSURE MAIN VALVE ENGINE OXID INLET	SP0009P
6	PRESSURE MAIN VALVE ENGINE FUEL INLET	SP0010P
7	TEMPERATURE THRUST CHAMBER OUTER SKIN	SP0020T
8	POSITION FUEL/OXIDIZER VALVE 1	SP0022H
9	POSITION FUEL/OXIDIZER VALVE 2	SP0023H
10	POSITION FUEL/OXIDIZER VALVE 3	SP0024H
11	POSITION FUEL/OXIDIZER VALVE 4	SP0025H
12	TEMPERATURE ENGINE FUEL FEED LINE	SP0042T
13	TEMPERATURE ENGINE OXID FEED LINE	SP0043T
14	TEMPERATURE NOZZLE OUTER SKIN 1	SP0050T
15	ENGINE VALVE ACT. SYSTEM PRIM. TANK PRESS.	SP0600P
16	ENGINE VALVE ACT. SYSTEM SEC TANK PRESS.	SP0601P
17	QUANTITY SPS OXID STORAGE TANK - (TOTAL AUX)	SP0655Q
18	QUANTITY SPS OXID SUMP TANK	SP0656Q
19	QUANTITY SPS FUEL STORAGE TANK - (TOTAL AUX)	SP0657Q
20	QUANTITY SPS FUEL SUMP TANK	SP0658Q
21	PRESSURE ENGINE CHAMBER	SP0661P

SPS MALFUNCTIONS			
MALF. NO.	MALFUNCTION DESCRIPTION	MALF. NO.	MALFUNCTION DESCRIPTION
SP-001	HELIUM TANK LEAKAGE, 1/7 MAX. RATE	SP-042	ENGINE INJECTOR VALVE POSITION INDICATOR #1 FAILS CLOSED WHILE ENGINE FIRING
SP-002	HELIUM TANK LEAKAGE, 2/7 MAX. RATE	SP-043	ENGINE INJECTOR VALVE POSITION INDICATOR #2 FAILS OPEN WHILE ENGINE OFF
SP-003	HELIUM TANK LEAKAGE, 4/7 MAX. RATE	SP-044	ENGINE INJECTOR VALVE POSITION INDICATOR #3 FAILS OPEN ONE THIRD
SP-004	HELIUM ISOLATION VALVE A FAILS OPEN/CLOSED	SP-045	ENGINE INJECTOR VALVE POSITION INDICATOR #4 FAILS OPEN TWO THIRDS
SP-005	HELIUM ISOLATION VALVE B FAILS OPEN/CLOSED	SP-046	PU PRIMARY VALVE FAILS - PRES POS
SP-006	HELIUM REGULATOR A FAILS CLOSED	SP-047	PU SECONDARY VALVE FAILS - PRES POS
SP-007	HELIUM REGULATOR A, PRIMARY SECTION, FAILS OPEN	SP-050	PU VALVE POSITION INDICATOR FAILS IN PRESENT POSITION
SP-010	HELIUM REGULATOR B FAILS CLOSED	SP-051	PU VALVE POSITION INDICATOR FAILS, SLEWS TO MAX. ORIFICE
SP-011	HELIUM REGULATOR B, PRIMARY SECTION, FAILS OPEN	SP-052	PU VALVE POSITION INDICATOR FAILS, SLEWS TO MIN. ORIFICE
SP-012	HELIUM ISOLATION VALVE A POSITION INDICATOR FAILS INDICATING CLOSED	SP-053	HELIUM TANK PRESSURE SENSOR FAILS TO ZERO
SP-013	HELIUM ISOLATION VALVE B POSITION INDICATOR FAILS INDICATING CLOSED	SP-054	OXIDIZER ULLAGE PRESSURE SENSOR FAILS TO ZERO
SP-014	HELIUM TANK PRESSURE INDICATOR FAILURE	SP-055	ENGINE INLET FUEL PRESSURE INDICATOR FAILS TO ZERO
SP-015	HELIUM TANK TEMPERATURE INDICATOR FAILURE AT 100° C	SP-056	ENGINE INLET OXIDIZER PRESSURE INDICATOR FAILS TO ZERO
SP-020	OXIDIZER ULLAGE PRESSURE INDICATOR FAILURE	SP-057	FUEL STORAGE TANK SENSOR FAIL (PU PRIMARY)
SP-021	FUEL ULLAGE PRESSURE INDICATOR FAILURE	SP-060	OXIDIZER SUMP TANK SENSOR FAIL (PU PRIMARY)
SP-022	OXIDIZER SYSTEM HELIUM LEAKAGE, 1/7 MAX. RATE	SP-061	FUEL FLOW RATE INTEGRATOR FAIL (PU AUXILIARY)
SP-023	OXIDIZER SYSTEM HELIUM LEAKAGE, 2/7 MAX. RATE	SP-062	OXIDIZER POINT SENSOR UPDATE FAIL (PU AUXILIARY)
SP-024	OXIDIZER SYSTEM HELIUM LEAKAGE, 4/7 MAX. RATE	SP-063	PU FUEL QUANT IND READS MAX.
SP-025	OXIDIZER SYSTEM OXIDIZER LEAKAGE, 1/7 MAX. RATE	SP-064	PU FUEL QUANT IND READS MIN
SP-026	OXIDIZER SYSTEM OXIDIZER LEAKAGE, 2/7 MAX. RATE	SP-065	OXIDIZER QUANTITY INDICATOR (PU) READS MAX.
SP-027	OXIDIZER SYSTEM OXIDIZER LEAKAGE, 4/7 MAX. RATE	SP-066	OXIDIZER QUANTITY INDICATOR (PU) READS MIN.
SP-030	FUEL SYSTEM HELIUM LEAKAGE, 1/7 MAX. RATE	SP-067	PU UNBALANCE INDICATOR READS MAX. INCREASE
SP-031	FUEL SYSTEM HELIUM LEAKAGE, 2/7 MAX. RATE	SP-070	PU UNBALANCE INDICATOR READS MAX. DECREASE
SP-032	FUEL SYSTEM HELIUM LEAKAGE, 4/7 MAX. RATE	SP-071	SPS ENGINE SKIN BREAKUP (TEMP RISE)
SP-033	FUEL SYSTEM FUEL LEAKAGE, 1/7 MAX. RATE	SP-072	OXIDIZER STORAGE TANK SENSOR FAILS - MAX. (PU PRIMARY)
SP-034	FUEL SYSTEM FUEL LEAKAGE, 2/7 MAX. RATE	SP-073	FUEL POINT SENSOR FAILS (PU AUXILIARY)
SP-035	FUEL SYSTEM FUEL LEAKAGE, 4/7 MAX. RATE	SP-074	OXIDIZER NORMAL FLOW RATE INTEGRATOR FAILS (PU AUXILIARY SENSING)
SP-036	ENGINE INJECTOR VALVE #1 FAILED OPEN/CLOSED	SP-075	PU UNBALANCE INDICATOR SLEWS TO ZERO
SP-037	ENGINE INJECTOR VALVE #2 FAILED OPEN/CLOSED	SP-076	PU FAULT DETECTION SYSTEM #1 FAILS
SP-040	ENGINE INJECTOR VALVE #3 FAILED OPEN/CLOSED	SP-077	PU FAULT DETECTION SYSTEM #2 FAILS
SP-041	ENGINE INJECTOR VALVE #4 FAILED OPEN/CLOSED	SP-100	FUEL SUMP TANK SENSOR FAILS - MAX. (PU PRIMARY)

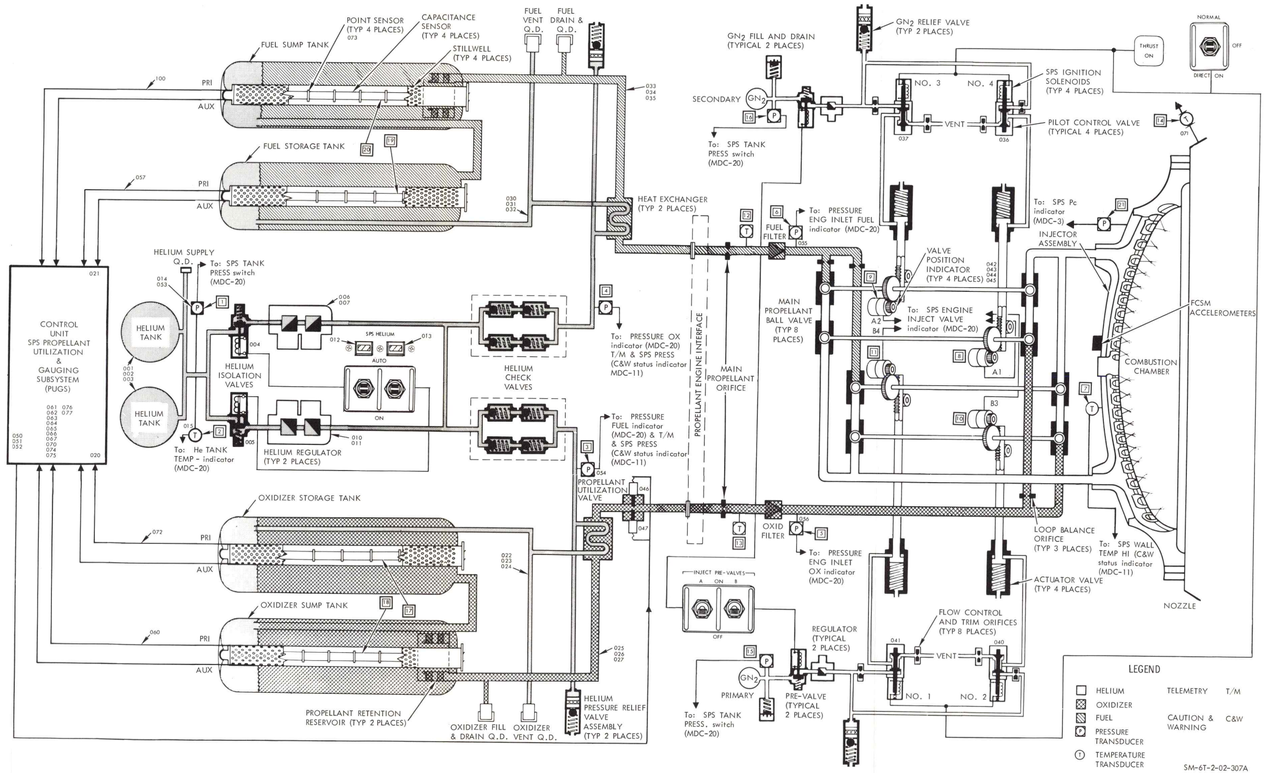

Figure 2-44. Service Propulsion System

2.10.2.1 Service Propulsion System Thermodynamic Simulation.

The following paragraphs describe the SPS thermodynamics simulation as depicted in figure 2-45.

The helium reservoir block computes the characteristics of the helium in the storage tanks. The equations maintain the temperature, pressure, and mass relationships of the helium and accounts for the compressibility factor of the gas at high pressures. The mass of helium remaining in the storage tanks is determined by integrating the helium mass with the helium mass flow rate times time. The helium temperature is computed as a function of mass flow rate out of the system and radiated and conducted heat transferred into the system. Reservoir pressure is determined by temperature, storage tank volume, helium mass, and several gas compressibility constants. Helium mass flow rates and helium temperature flow rates are functions of reservoir mass, pressure, and temperature.

The set of equations used to simulate the helium regulator is the most critical set in the SPS from a stability and accuracy aspect. In solving these equations, the computer uses propellant tank pressure predictors. Computations are made twice each iteration period to assure maximum stability. The helium regulator output pressures vary directly as a function of upstream pressure and inversely as a function of helium mass flow rate through the regulators.

Relief valve and heat exchanger equations are combined because of their common terms and because of their physical location in the actual system. The relief valves provide the propellant tanks with protection against overpressure. The relief valve equations are used to calculate simulated valve operation and amount of helium flow through them. The heat exchanger equations in the group are used to simulate the temperature change in the helium as it flows to the propellant tanks. The temperature of the propellants, and the helium, and the helium flow rate are all considered in these calculations.

The helium isolation valves and regulator operation block compute the helium flow through the regulators. Through the use of malfunctions, these equations will determine that both regulator branches are functioning properly, one regulator branch is functioning properly, one or both branches have malfunctioning primary regulators, or no helium is flowing through the regulators (due either to regulator malfunction or to closure of isolation valves).

The propellant tank block computes the effect of resistance to propellant flow within the tanks and the propellant remaining in each tank. As the quantity of fuel and oxidizer in the storage tanks decreases, propellant flow resistance also decreases because of the emptying of the stand pipe between the storage and sump tanks. This causes the thrust of the engine to increase during the latter part of the mission, both in the simulator and in the actual

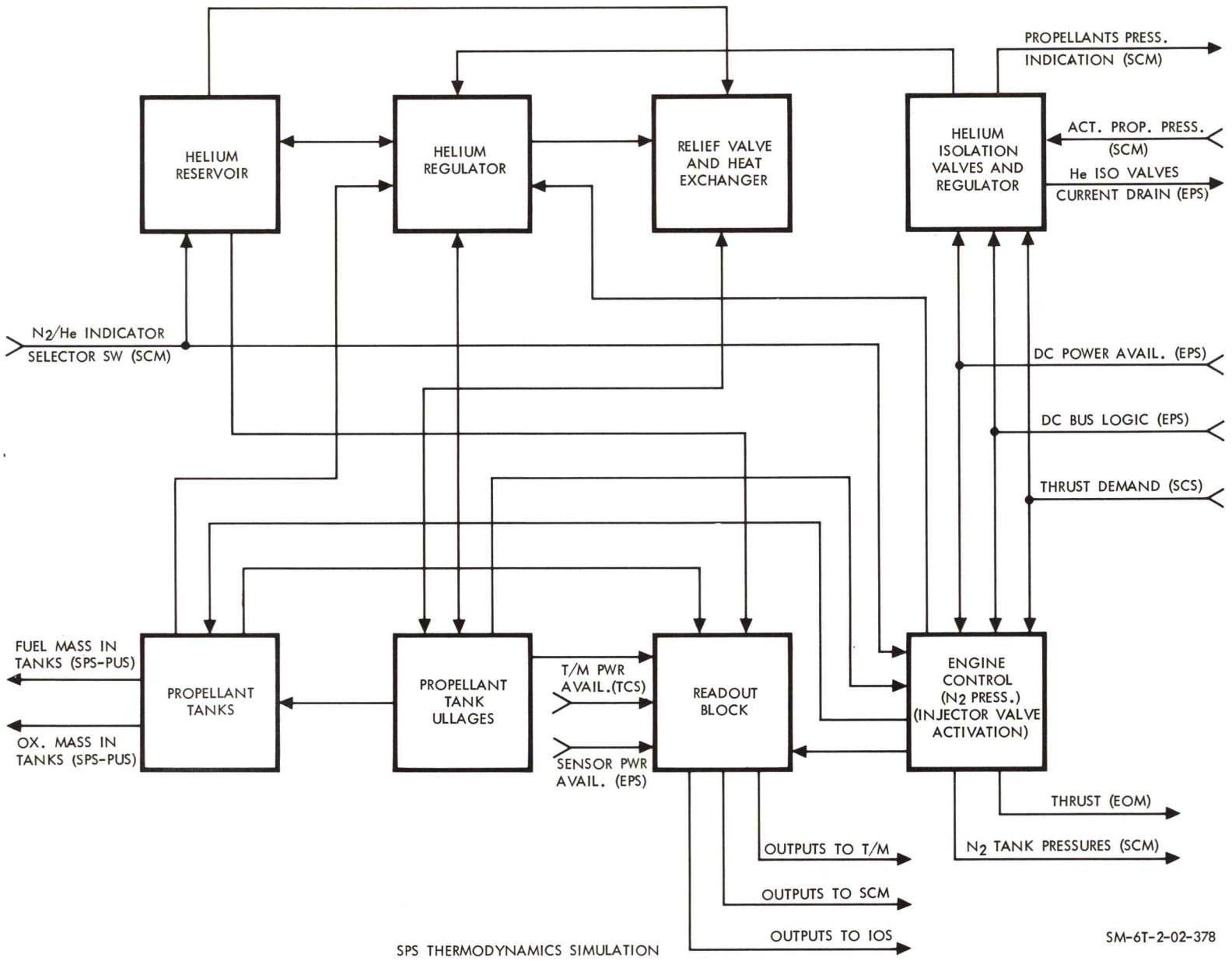

Figure 2-45. SPS Thermodynamics Simulation

system. Propellant quantities remaining are obtained by integration of propellant flows. The quantity of propellants in the sump tanks are assumed to remain at the initial loaded level until the storage tanks are emptied.

The propellant tank ullage equations determine the simulated characteristics of the pressurizing gases in the propellant tanks. The oxidizer vapor partial pressure is taken into account in the simulation of the oxidizer tank ullage pressure due to its varying effect on the overall tank pressure at different temperatures. Since fuel vapor partial pressure is small and changes only slightly over the system temperature range, it is not considered in the equations. These equations also allow the computer to keep track of the amount of helium or ullage in each propellant tank, the temperature and rate of temperature change of the ullage, and the flow rate of helium into each propellant tank. Leak rates in the propellant tanks are also computed by these equations.

The purpose of the engine control set of equations is to compute the interrelation of propellant flow, chamber pressure, mixture ratio, and output thrust of the SPS engine. Since the terms of these equations are interrelated, an initial value must be applied to one of the variables when the engine is turned on. Thrust chamber pressure is selected for this term and is initialized at 103 psia. Engine starting and stopping transients are simulated by utilizing the ENGINE ON and ENGINE OFF clocks. Thrust chamber pressure is considered constant unless altered by simulated malfunction. This pressure is fed to the flight combustion stability monitor in the SCM and its repeater at the IOS. If a malfunction is introduced to cause the thrust chamber pressure to be out of tolerance, a shutdown of the SPS will be simulated. Also included under this block are the computations of N_2 mass, temperature, and flow. This is the N_2 supply used by the SPS in positioning the main propellant valves.

The readout equations simulate the characteristics of the SPS sensors and indicators. The readout equations also simulate the effects of the various sensor and indicator malfunctions.

2.10.2.2 Propellant Utilization Subsystem (PUS).

The following equations simulate the propellant utilization systems (PUS) in the SPS. Reference may be made to figure 2-46, a block diagram of the PUS simulation.

Through use of the power-available equations, the simulated PUS determines if a-c and d-c bus power is available for normal operating mode or test mode. To accomplish this, the system uses inputs from the SCS, SPS, and EPS equations and the PUS switches. Analysis of the switch positions and products of the power-available equations determine the system mode. Simulated current drain is derived from the a-c and d-c bus power available and the system mode. The remaining equations in this group will enable the simulated PUS sensors from the engine-on command and, after a time delay of 4.5 seconds, the PUS displays.

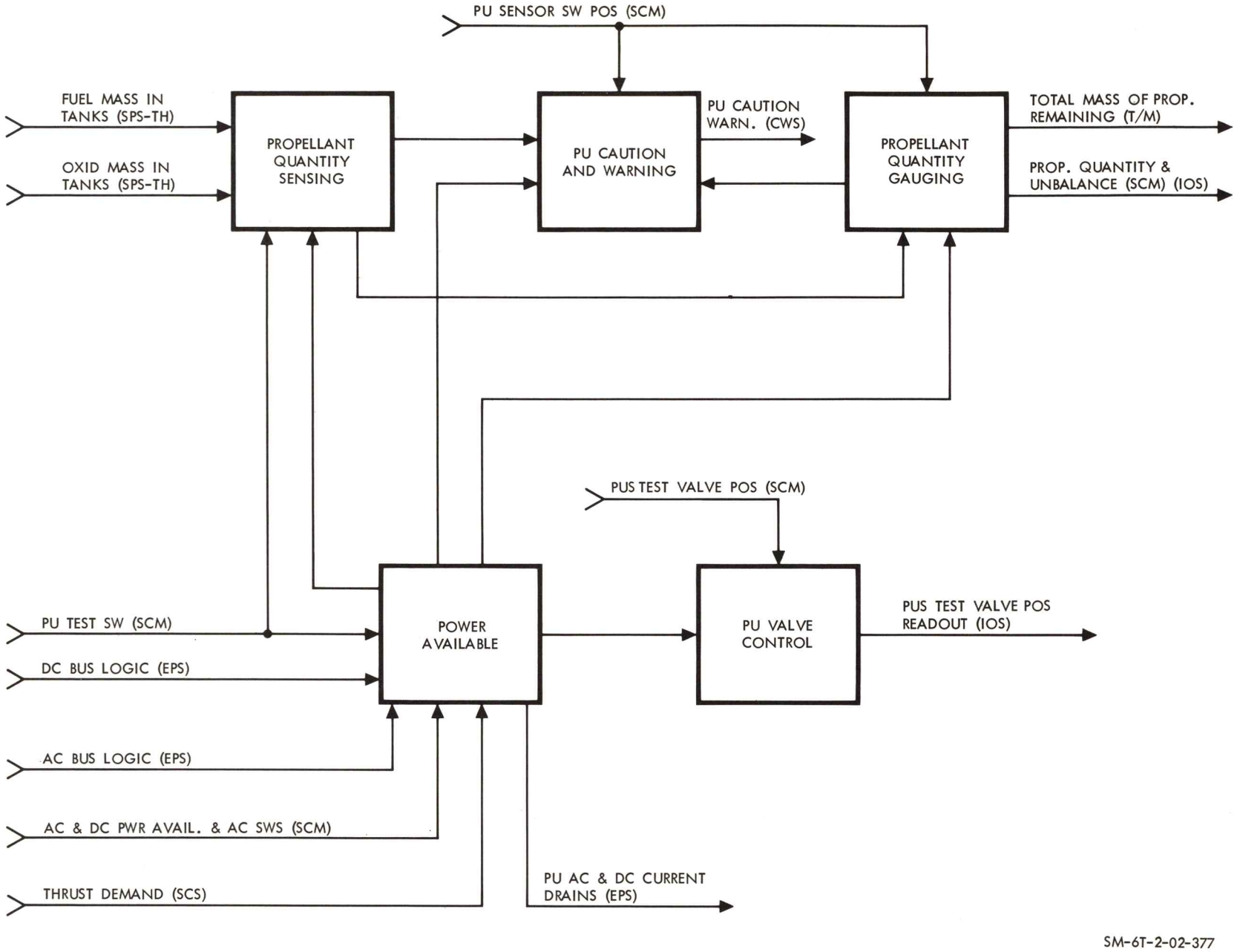

Figure 2-46. SPS Propellant Utilization Simulation

The propellant utilization valve equations, which are computed only during engine-on periods, use inputs from MIU and PUS switches. The PU valve position and several flow constants are ascertained and used to compute the PU valve flow resistance. The PU valve position indications are provided to the C/M and the IOS. The PU flow resistance is used in the SPS equations to determine the amount of oxidizer used. Two equations in this group are used to insert malfunctions into the simulated valve operation. One is used to malfunction the primary system, and the other to malfunction the secondary system.

The PUS propellant quantity sensing equations use input information from the MIUs, the PUS switches, and the SPS equations. These equations are computed only during engine-on periods or when a test mode is activated. They compute the weight of fuel and oxidizer remaining in each of the four propellant tanks. When the secondary sensing system is selected to provide propellant quantity outputs, two of the primary system outputs will maintain their present output and will be disconnected from the C/M indicators while the other two will begin to transmit the secondary sensing system outputs. This allows the secondary system to take over control of the C/M indicators. The specific voltages sent to the C/M fuel quantity, oxidizer quantity, and unbalance indicators are determined through three other equations.

The PUS caution and warning equations use inputs from the MIU and PUS sensor equations and the PUS switches. These equations will compute a fuel-oxidizer ratio unbalance as determined by the primary or auxiliary quantity sensing system. The fuel and oxidizer quantities sensed by the primary and secondary quantity sensing system are then compared. If the sensed difference in quantity exceeds specified limits, a malfunction will be indicated. If any of the above equations sense an out-of-tolerance condition, the PUS caution-warning equation will activate the caution-warning indicator in the C/M.

2.11 ELECTRICAL POWER SYSTEM.

The EPS supplies and controls all electrical power to the spacecraft systems during the mission. The EPS consists of fuel cells, a-c and d-c busses, and associated controls. For purposes of simulation, the EPS is divided into fuel cell thermodynamics, d-c bus section, EPS logic, and EPS displays. Also included in this section are the cryogenics storage system and the space radiators system. These systems are common to both the EPS and the ECS. Figures 2-47, 2-48, and 2-49 are diagrams of the SC 012 fuel cells, EPS busses and controls, and the cryogenics system, respectively. No drawing is included for the space radiator system due to its simplicity. These diagrams include simulated telemetry points and malfunctions available in the AMS.

2.11.1 EPS CONFIGURATION REFERENCE.

The EPS simulated in the AMS is an accurate simulation of the EPS planned for AF 012 at the time this handbook was being prepared.

2.11.2 ELECTRICAL POWER SYSTEM SIMULATION.

Simulation of the spacecraft EPS in the AMS is almost entirely accomplished by computer software. Only spacecraft controls and displays are physically and functionally represented in the AMS. The interaction between EPS controls and displays and the effects of operation of other systems on EPS status are accomplished by a cause and effect simulation of the EPS and its interface with other spacecraft system simulation. None of the system simulation in the AMS actually derives source power from the EPS simulation.

2.11.2.1 Cryogenics Storage Simulation.

The computer program computes the state of the oxygen and hydrogen in the cryogenics tanks at all times between launch minus 60 seconds and C/M-S/M separation. The program computes all functions occurring within the service module pertaining to the cryogenics system and provides outputs to drive corresponding SCM indicators and telemetered functions. All indicators within the command module are duplicated on the instructor console.

The computer program for the cryogenics system reads inputs from the ECS and EPS portions of the program and, in addition, all related SCM switch functions.

Figures 2-50 and 2-51 are block diagrams of the CSS oxygen storage and hydrogen storage simulations mechanized in the AMS. Crew inputs to the AMS cryogenics storage system (CSS) include oxygen and hydrogen tanks 1 and 2 fan and heater mode switch positions. Inputs from other portions of the EPS simulation include a-c and d-c power and power available, circuit breaker positions, oxygen flow rate demand, and hydrogen flow rate demand. The ECS simulation supplies C/M oxygen manifold pressure and oxygen manifold isolation valve status to the oxygen storage subsystem program.

The computer reads the C/M switch positions and ECS and fuel cell cryogenics requirements. Through integration of the flow requirements against the quantity of oxygen and hydrogen remaining, the total weight of the cryogenics is maintained and sent to IOS, telemetry, and the AMS command module. Using a series of constants and timing functions, temperature, pressure, and heater currents are calculated for each hydrogen and oxygen tank.

2.11.2.2 Fuel Cell Thermodynamics Simulation.

Simulation of the fuel cell thermodynamics is manifested to the crew in form of H_2 and O_2 flows, module skin temperatures, and condenser exhaust temperature displays. Mechanical flags also indicate O_2, H_2, and N_2 regulator pressures above an upper tolerance, F/C radiator temperature below tolerance, and output water pH factor above 9. These characteristics are separately computed for each fuel cell and fed to the CWS where they

FUEL CELL TELEMETRY POINTS		
NO.	SIGNAL DESCRIPTION	T/M CODE
1	F/C 1, 2, AND 3 SHUT OFF MONITOR	SC2323X SC2324X SC2325X
2	F/C 1, 2, AND 3 O_2 REGULATED PRESSURE	SC2066P SC2067P SC2068P
3	F/C 1, 2, AND 3 H_2 REGULATED PRESSURE	SC2069P SC2070P SC2071P
4	F/C 1, 2, AND 3 N_2 REGULATED PRESSURE	SC2060P SC2061P SC2062P
5	F/C 1, 2, AND 3 O_2 FLOW RATE	SC2142R SC2143R SC2144R
6	F/C 1, 2, AND 3 RADIATOR OUTLET TEMPERATURE	SC2087T SC2088T SC2089T
7	F/C 1, 2, AND 3 WATER pH FACTOR	SC2160Z SC2161Z SC2162Z
8	F/C 1, 2, AND 3 MODULE SKIN TEMPERATURE	SC2084T SC2085T SC2086T
9	F/C 1, 2, AND 3 H_2 FLOW RATE	SC2139R SC2140R SC2141R
10	F/C 1, 2, AND 3 CONDENSER EXHAUST TEMPERATURE	SC2081T SC2082T SC2083T

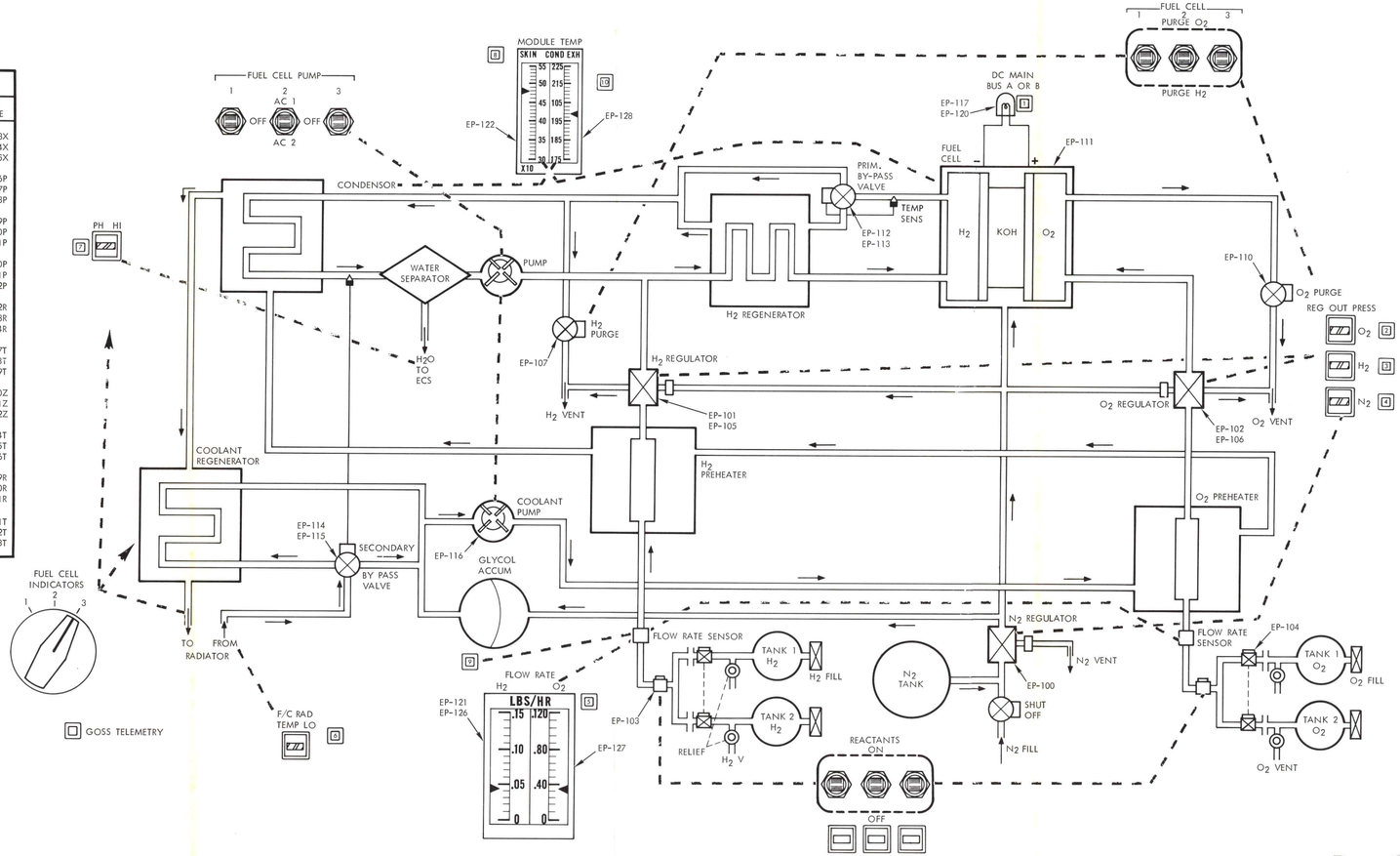

FUEL CELL MALFUNCTIONS	
MALF. NO.	MALFUNCTION DESCRIPTION
EP013	FUEL CELL NO. 2 PUMPS DRAW EXCESSIVE CURRENT
EP100	FUEL CELL NO. 1 N_2 PRESSURE HIGH
EP101	FUEL CELL NO. 1 H_2 PRESSURE HIGH
EP102	FUEL CELL NO. 1 O_2 PRESSURE HIGH
EP103	FUEL CELL NO. 2 H_2 SUPPLY VALVE FAILS CLOSED
EP104	FUEL CELL NO. 2 O_2 SUPPLY VALVE FAILS CLOSED
EP105	FUEL CELL NO. 1 H_2 LEAK
EP106	FUEL CELL NO. 1 O_2 LEAK
EP107	FUEL CELL NO. 1 H_2 PURGE VALVE FAILS CLOSED
EP110	FUEL CELL NO. 1 O_2 PURGE VALVE FAILS CLOSED
EP111	FUEL CELL NO. 2 pH HIGH
EP112	FUEL CELL NO. 2 PRIMARY BYPASS VALVE FAILS CLOSED
EP113	FUEL CELL NO. 2 PRIMARY BYPASS VALVE FAILS CLOSED
EP114	FUEL CELL NO. 3 SECONDARY BYPASS VALVE FAILS OPEN
EP115	FUEL CELL NO. 3 SECONDARY BYPASS VALVE FAILS CLOSED
EP121	H_2 FLOW METER FAILS - OPEN COIL
EP122	MODULE SKIN TEMP METER FAILS - OPEN COIL
EP126	H_2 FLOW METER FAILS - READS HIGH BY 150%
EP127	O_2 FLOW METER FAILS - OPEN COIL
EP130	CONDENSER EXHAUST TEMP METER FAILS - OPEN COIL
EP131	FUEL CELL NO. 1 PRIMARY BYPASS VALVE FAILS CLOSED
EP132	FUEL CELL NO. 3 PRIMARY BYPASS VALVE FAILS OPEN
EP133	FUEL CELL NO. 2 H_2 PRESSURE HIGH
EP134	FUEL CELL NO. 3 H_2 PRESSURE HIGH
EP135	FUEL CELL NO. 2 H_2 LEAK
EP136	FUEL CELL NO. 3 H_2 LEAK
EP137	FUEL CELL NO. 1 pH HIGH
EP140	FUEL CELL NO. 3 pH HIGH
EP141	FUEL CELL NO. 1 PRIMARY BYPASS VALVE FAILS OPEN
EP142	FUEL CELL NO. 3 PRIMARY BYPASS VALVE FAILS OPEN
EP143	H_2 PRESSURE LOW
EP144	FUEL CELL NO. 2 H_2 PRESSURE LOW
EP145	FUEL CELL NO. 3 H_2 PRESSURE LOW
EP146	FUEL CELL NO. 2 O_2 PRESSURE HIGH
EP147	FUEL CELL NO. 3 O_2 PRESSURE HIGH
EP150	FUEL CELL NO. 1 O_2 PRESSURE LOW
EP 151	FUEL CELL NO. 2 O_2 PRESSURE LOW
EP152	FUEL CELL NO. 3 O_2 PRESSURE LOW
EP153	FUEL CELL NO. 2 N_2 PRESSURE HIGH
EP154	FUEL CELL NO. 3 N_2 PRESSURE HIGH
EP155	FUEL CELL NO. 1 N_2 PRESSURE LOW
EP156	FUEL CELL NO. 2 N_2 PRESSURE LOW
EP157	FUEL CELL NO. 3 N_2 PRESSURE LOW
EP160	FUEL CELL NO. 2 O_2 LEAK
EP161	FUEL CELL NO. 3 O_2 LEAK
EP162	FUEL CELL NO. 1 ELECTRODE CONTAMINATION
EP163	FUEL CELL NO. 2 ELECTRODE CONTAMINATION

SM-6T-2-02-309A

Figure 2-47. Fuel Cell Subsystem

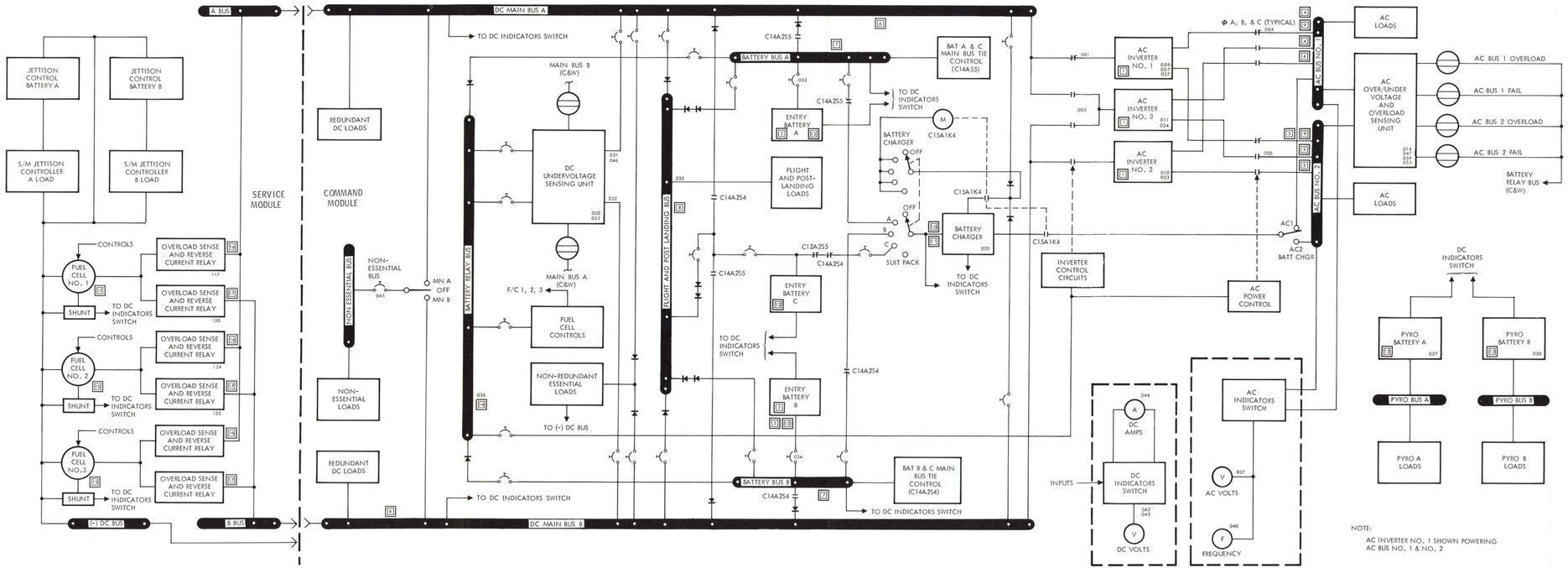

NOTE:
AC INVERTER NO. 1 SHOWN POWERING AC BUS NO. 1 & NO. 2

SM-6T-2-02-371

EPS MALFUNCTIONS	
MALF NO.	MALFUNCTION DESCRIPTION
EP001	INVERTER NO. 1 MOTOR SWITCH FAILS OFF
EP003	INVERTER NO. 3 MOTOR SWITCH FAILS OFF
EP004	INVERTER NO. 1 TO BUS 1 MOTOR SWITCH FAILS OFF
EP005	INVERTER NO. 3 TO BUS 2 MOTOR SWITCH FAILS OFF
EP006	INVERTER NO. 1 SMOKE
EP007	INVERTER NO. 1 INTERNAL OSCILLATOR FAILS
EP010	INVERTER NO. 2 VOLTAGE HIGH
EP011	INVERTER NO. 3 VOLTAGE LOW
EP014	AC BUS 2 OVERLOAD
EP020	BATTERY CHARGER FAILS
EP023	INVERTER NO. 2 FREQUENCY LOW
EP024	INVERTER NO. 3 FREQUENCY HIGH
EP027	PYRO BATTERY A FAILS
EP030	PYRO BATTERY B FAILS
EP031	DC BUS A OVERLOAD
EP032	DC BUS B OVERLOAD
EP033	BATTERY BUS A OVERLOAD
EP034	BATTERY BUS B OVERLOAD
EP035	POST LANDING BUS OVERLOAD
EP036	BATTERY RELAY BUS OVERLOAD
EP037	AC VOLTMETER-OPEN COIL
EP040	AC FREQUENCY METER-OPEN COIL
EP042	DC VOLTMETER-OPEN COIL
EP043	DC VOLTMETER-READS 25% LOW
EP044	DC AMMETER-OPEN COIL
EP045	NON-ESSENTIAL BUS FAILS
EP046	BUS A UNDERVOLTAGE SENSOR INOPERATIVE
EP047	AC BUS 1 UNDERVOLTAGE-ERRONEOUS INDICATION
EP050	BUS B RESET SWITCH FAILS IN ON POSITION
EP053	BUS B UNDERVOLTAGE-ERRONEOUS INDICATION
EP054	AC BUS 1 OVERVOLTAGE-ERRONEOUS INDICATION
EP055	AC BUS 2 U/V, O/V, O/L SENSOR INOPERATIVE
EP057	INVERTER NO. 1 FAILS
EP117	F/C 1 TO BUS A MTR SW FAILS IN PRESENT POSITION
EP120	F/C 1 TO BUS B MTR SW FAILS IN PRESENT POSITION
EP124	F/C 2 TO BUS A ERRONEOUS DISCONNECT
EP125	F/C 2 TO BUS B ERRONEOUS DISCONNECT

EPS TELEMETRY POINTS		
NO.	SIGNAL DESCRIPTION	T/M CODE
1	TEMPERATURE STATIC INVERTER 1, 2, AND 3	C01757 C01767 C01777
2	TEMPERATURE BATTERY CASE A AND B	C01787 C01797
3	PRESSURE BATTERY COMPARTMENT (MANIFOLD)	C01887
4	AC VOLTAGE MAIN BUS 1 PHASE A,B, AND C	C02000 C02001 C02002
5	AC VOLTAGE MAIN BUS 2 PHASE A,B, AND C	C02003 C02004 C02005
6	DC VOLTAGE MAIN BUS A AND B	C02006 C02007
7	DC VOLTAGE BATTERY BUS A AND B	C02010 C02011
8	DC VOLTAGE BATTERY C	C02012
9	FREQUENCY AC BUS 1 AND 2 PHASE A	C02013 C02017
10	DC VOLTAGE BATTERY CHARGER OUT	C02014
11	DC CURRENT BATTERY CHARGER OUT	C02015
12	DC CURRENT BATTERY A,B, AND C	C02022 C02023 C02024
13	DC VOLTAGE PYRO BATTERY A AND B	C02027 C02028
14	DC VOLTAGE BATTERY RELAY BUS	C02032
15	DC CURRENT F/C 1,2, AND 3 OUTPUT	SC2113 SC2114 SC2115
16	FUEL CELL 1,2, AND 3 BUS A DISCONNECT	SC2120 SC2121 SC2122
17	FUEL CELL 1,2, AND 3 BUS B DISCONNECT	SC2125 SC2126 SC2127

Figure 2-48. EPS Block Diagram

OXYGEN STORAGE SUBSYSTEM MALFUNCTIONS	
MALF. NO.	MALFUNCTION DESCRIPTION
CN001	TANK 2 QUANTITY SENSOR FAILS
CN004	TANK 2 PRESSURE SWITCH FAILS
CN005	TANK 1, OXYGEN PRESSURE SWITCH FAILS
CN006	HEATER CURRENT SENSOR FAILS - MAX. OUTPUT
CN010	TANK 1 QUANTITY SIGNAL CONDITIONER FAILS - MAX. OUTPUT
CN012	TANK 1 PRESSURE SIGNAL CONDITIONER FAILS - MAX. OUTPUT
CN014	TANK 2 TEMPERATURE SIGNAL CONDITIONER FAILS - MAX. OUTPUT
CN020	TANK 1 OXYGEN QUANTITY METER READS ZERO
CN022	TANK 1 OXYGEN PRESSURE METER READS ZERO
CN026	TANK 1 PRESSURE SWITCH FAILS CLOSED
CN030	TANK 1 HEATER TEMP LIMIT SWITCH FAILS CLOSED
CN040	TANK 2 HEATER POWER SWITCH "MAN" POSITION IS GROUNDED
CN041	TANK 1 RUPTURE
CN042	TANK 2 RUPTURE
CN043	TANK 1 RELIEF VALVE FAILS CLOSED
CN046	TANK 1 HEATER POWER SWITCH "AUTO" POSITION IS GROUNDED
CN063	TANK 2 PRESSURE SWITCH FAILS CLOSED

HYDROGEN STORAGE SUBSYSTEM MALFUNCTIONS	
MALF. NO.	MALFUNCTION DESCRIPTION
CN002	TANK 2 PRESSURE TRANSDUCER FAILS
CN003	TANK 1 HEATER SWITCH FAILS OPEN
CN007	HEATER CURRENT SENSOR FAILS - ZERO OUTPUT
CN011	TANK 1 QUANTITY SIGNAL CONDITIONER FAILS - ZERO OUTPUT
CN013	TANK 1 PRESSURE SIGNAL CONDITIONER FAILS - ZERO OUTPUT
CN015	TANK 2 TEMPERATURE SIGNAL CONDITIONER FAILS - ZERO OUTPUT
CN021	TANK 1 QUANTITY METER STICKS IN PRESENT POSITION
CN023	TANK 1 PRESSURE METER STICKS IN PRESENT POSITION
CN027	TANK 1 PRESSURE SWITCH FAILS OPEN
CN031	TANK 1 HEATER TEMP LIMIT SWITCH FAILS OPEN
CN052	TANK 2 PRESSURE SWITCH FAILS CLOSED
CN053	TANK 1 PRESSURE SWITCH FAILS CLOSED
CN054	TANK 2 RUPTURE
CN055	TANK 1 RUPTURE

TELEMETRY SIGNALS		
NO.	SIGNAL DESCRIPTION	T/M CODE
1	QUANTITY O_2 TANK 1	SF0032Q
2	QUANTITY O_2 TANK 2	SF0033Q
3	PRESSURE O_2 TANK 1	SF0037P
4	PRESSURE O_2 TANK 2	SF0038P
5	TEMPERATURE O_2 TANK 1	SF0041T
6	TEMPERATURE O_2 TANK 2	SF0042T

TELEMETRY SIGNALS		
NO.	SIGNAL DESCRIPTION	T/M CODE
1	QUANTITY H_2 TANK 1	SF0030Q
2	QUANTITY H_2 TANK 2	SF0031Q
3	PRESSURE H_2 TANK 1	SF0039P
4	PRESSURE H_2 TANK 2	SF0040P
5	TEMPERATURE H_2 TANK 1	SF0043T
6	TEMPERATURE H_2 TANK 2	SF0044T

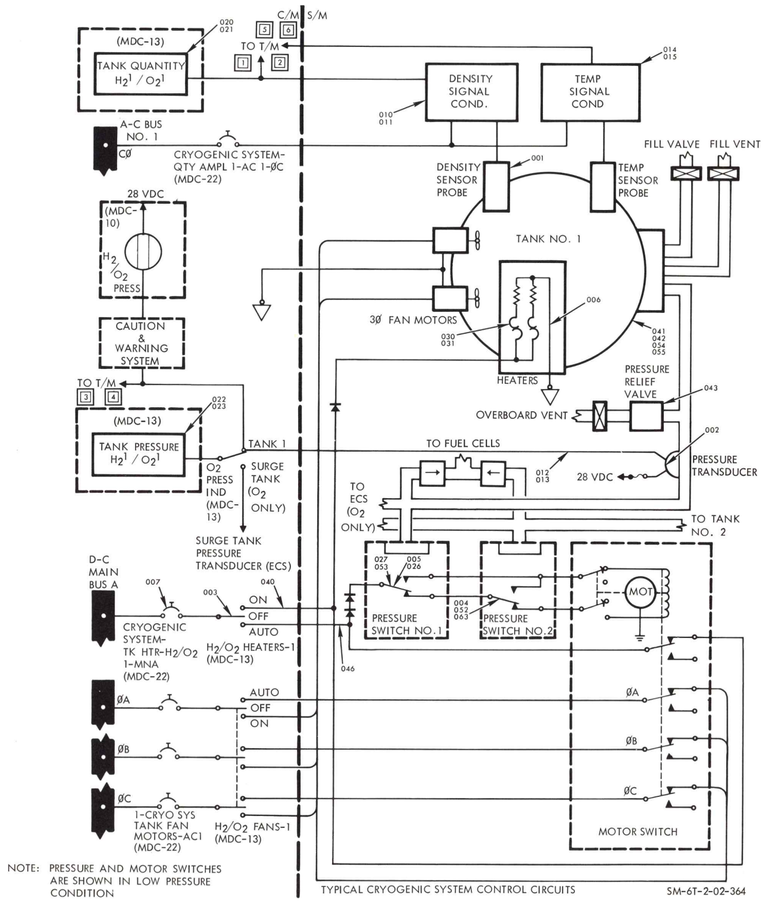

Figure 2-49. Cryogenics Storage System

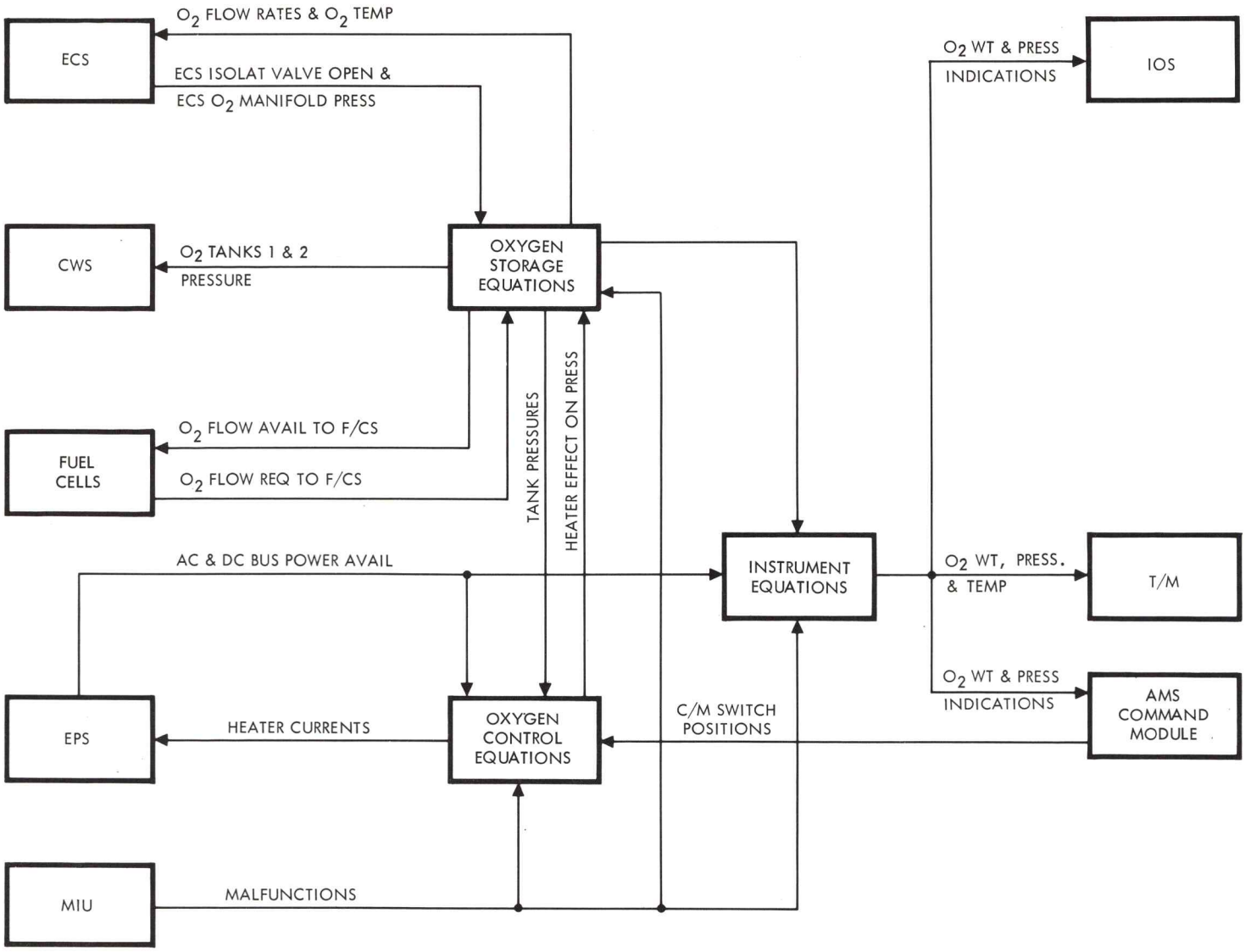

Figure 2-50. Oxygen Storage Subsystem Simulation

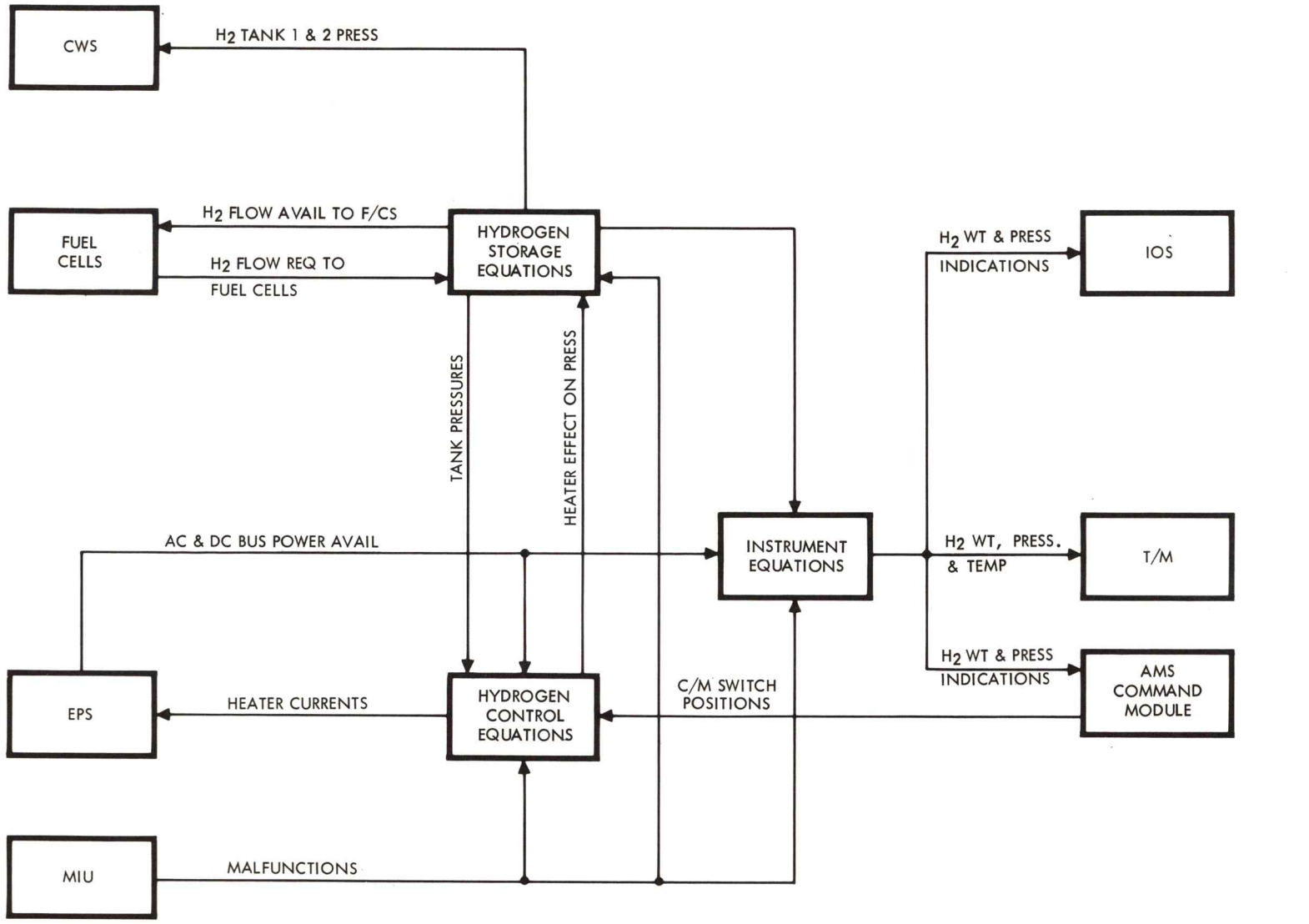

SM-6T-2-02-382

Figure 2-51. Hydrogen Storage Subsystem Simulation

are compared with fixed limits. If the variables exceed these limits, the mechanical flags are displayed in the SCM. A selector switch in the SCM determines which fuel cell will have its parameters displayed. Crew control of the fuel cell thermodynamics simulations include H_2 and O_2 PURGE and REACTANTS ON-OFF controls. The outputs from these switches are fed to the F/C program in the computer. When simulated malfunctions are inserted into the program, appropriate effects are simulated, not only in the fuel cell thermodynamics, but also in the fuel cell electrical output.

Figure 2-52 is a block diagram of the AMS F/C thermodynamics simulation. The three blocks on the right (coefficient subroutine, algebra subroutine, and H_2 and H_2O partial pressure in condenser exhaust blocks) perform intermediate steps in computing the fuel cell outputs. The F/C O_2 and H_2 flow blocks use reactants on O_2 and H_2 purge and F/C power output signals to determine O_2 and H_2 flow for each F/C. These outputs are fed to the EPS and to the F/C total O_2 and H_2 flow block. There the flows from all three F/Cs are combined and total O_2 and H_2 flow is sent to the EPS. F/C total O_2 and H_2 demand may be at variance with total O_2 and H_2 flow due to reactant availability fluctuations. This is determined in the F/C total O_2 and H_2 demand block, whose output is sent to the EPS. The F/C radiator block integrates the temperature of the incoming coolant from the space radiators with the previous temperatures of the F/C radiator to determine the new F/C radiator temperature. This new temperature is sent to the coefficient subroutine block and, after modification, returns to the F/C temperature block. There, along with F/C power production information, the F/C radiator temperature helps determine the F/C module skin temperature. The F/C glycol flow block works from the incoming glycol flow rate, the F/C cooling required, and the various valve positions to determine the paths of glycol flow and the rate of flow in each path. The rate of potable water production is determined in the F/C water block. There, F/C power production information is combined with water separation cycle data and, contingent upon the capability of the ECS to accept water, the water output rate is generated. The pH factor of the water is also generated within this block. Within the F/C regulator output pressure block, regulator valve positions and N_2, H_2, and O_2 source pressures combine to determine N_2, H_2, and O_2 pressures into the fuel cells. The F/C power and current block of the fuel cell thermodynamic simulation combines the individual fuel cell power outputs, current outputs, and heater currents to supply three totals to the coefficient subroutine block.

2.11.2.3 EPS Control Logic Simulation.

Figure 2-53 is a block diagram of the EPS control logic simulation. The EPS control logic controls most of the operations within the EPS. Fuel cell control and overload sensing is simulated by that block in the diagram. Working from switch positions and event occurrences, this block sends out signals which activate the fuel cells and cause their proper operation. Also, the total current from each fuel cell is compared with limits to determine if the cell should be shut down. The a-c and d-c internal current drains block determines the loads within the EPS. These

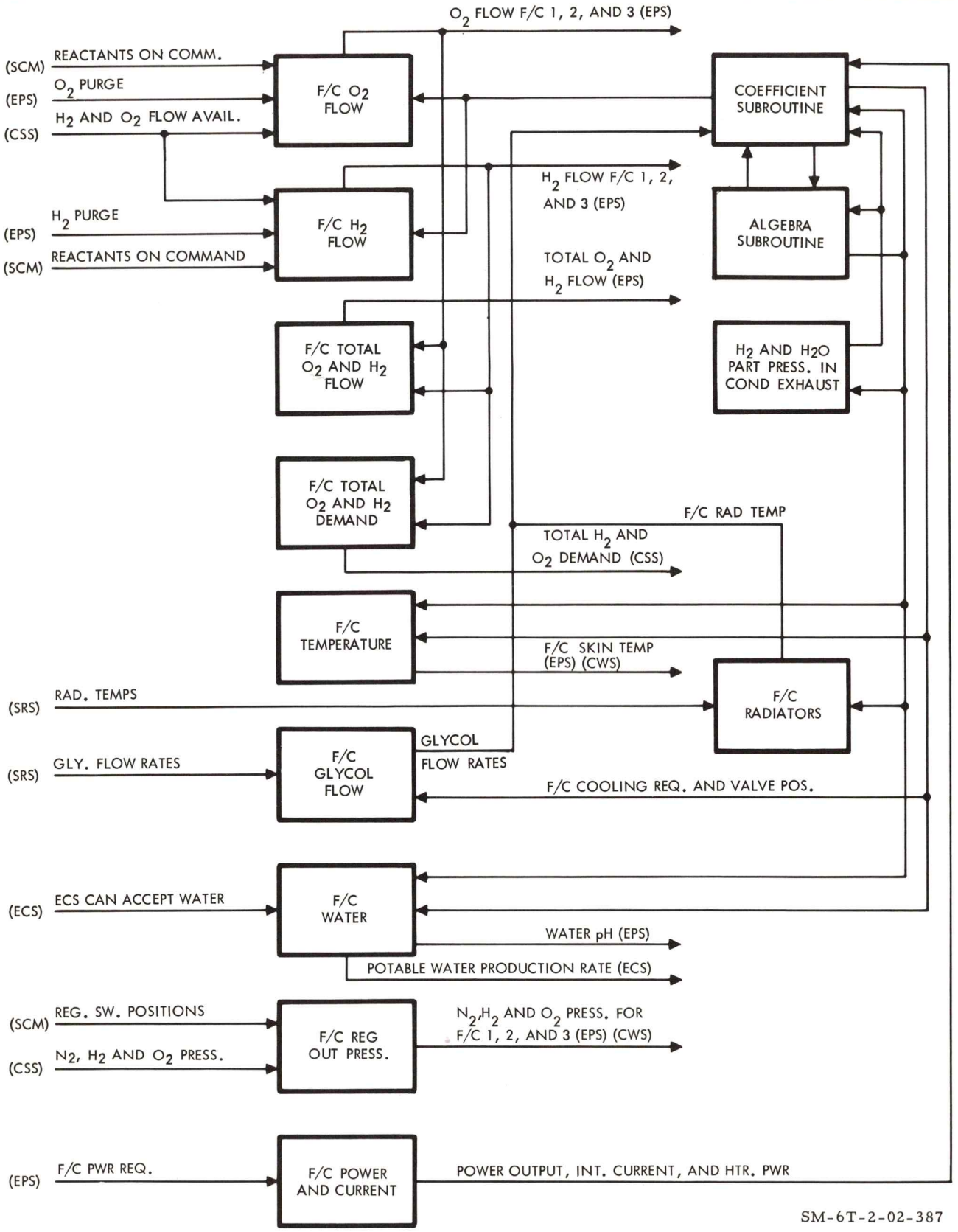

Figure 2-52. EPS Fuel Cell Thermodynamic Simulation

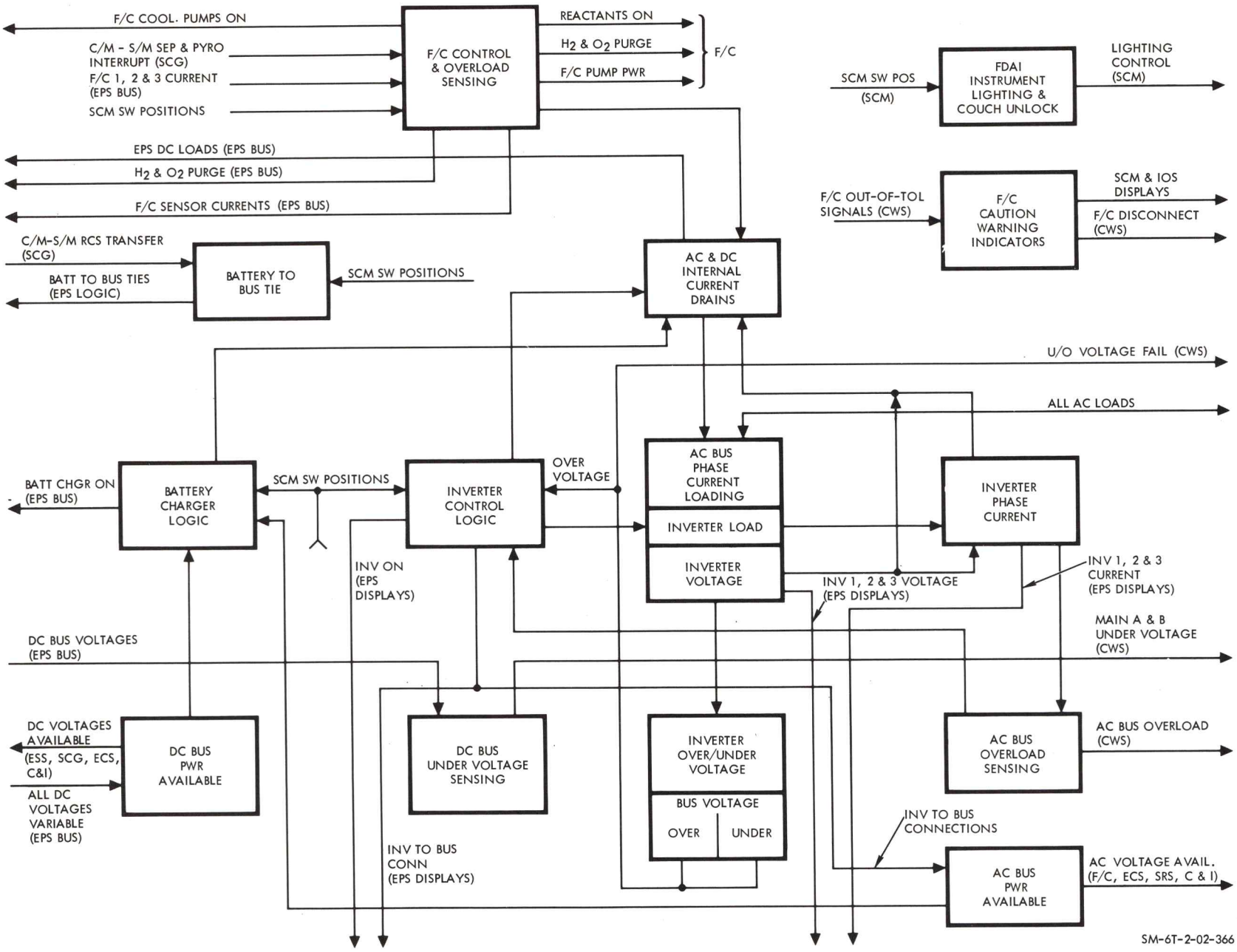

Figure 2-53. EPS Logic Simulation

include F/C pumps, battery charger, inverters, nonessential bus, and motor-driven switches. The d-c loads are sent to the EPS d-c bus program while the a-c loads are sent to the a-c bus phase current loading block. This block is explained later. The F/C caution and warning indicators block receives signals from the caution and warning system. These include for each fuel cell, PH HI, F/C RAD TEMP LOW, and N_2, H_2, and O_2 REG OUT PRESS tolerances. Receipt of any one of these will cause the respective F/C disconnect signal to be sent out and the proper display within the SCM and at the IOS.

The d-c bus power available block receives all d-c bus voltages and determines which are available for operation on the basis of voltages being within tolerance. If these voltages are not within tolerance, the d-c bus undervoltage sensing block will cause the proper MAIN BUS UNDERVOLT light to illuminate.

The battery to bus tie block, working from SCM switch positions, determines which busses are fed from each battery. The CM-SM RCS transfer function also feeds into this block to disconnect all SM d-c busses at separation.

The inverter control logic block determines from SCM switch positions which inverters are to be activated and which disconnected. Any overload or overvoltage feedback will cause the malfunctioning or overloaded inverter to be disconnected. The output of this block is fed to the a-c bus phase current loading block. Here the load on each phase of both a-c busses is determined on the basis of a-c load information from all using programs. From the bus loading and switch positions, the inverter load is determined and, indirectly, the inverter voltage. This voltage is sent to the inverter over/undervoltage block. If an overvoltage condition exists in the inverter and, in turn, on the a-c bus, an overvoltage signal is sent back to the inverter control block causing inverter disconnect. Inverter currents and inverter voltages are sent to the inverter phase current block. Inverter currents for all three inverters are sent to the EPS displays program from this point. The current through each a-c bus phase is computed and sent to the a-c bus overload sensing block. If an overload is sensed through comparison of phase/current to known limits, an a-c bus overload signal is sent to the CWS and to the inverter control logic block. This overload signal would cause inverter disconnect in the inverter control logic block exactly as an overvoltage signal would. If the inverter output voltages and currents are within tolerance, the a-c bus power available block will send out signals to the F/C ECS, SRS, and C & I simulations indicating that a-c bus power is available. This same signal is sent to the battery charger block for the same purpose. If both a-c and d-c bus power are available, the battery charger block may simulate charging of the S/C batteries provided the proper SCM switches are positioned.

In the FDAI, instrument lighting and couch unlock block commands will be generated to cause lighting changes and unlocking of the crew couch. These signals will be in response to corresponding switch positions and will be issued only if the proper d-c bus powers are available.

2.11.2.4 EPS D-C Bus Simulation.

All EPS d-c bus parameters are computed in the d-c bus simulation program. A block diagram of this program is shown in figure 2-54. The d-c bus conductance block determines the conductance of all d-c busses from the d-c load information provided by the various system simulations in the AMS. The total conductance for each bus is sent to the bus voltage block.

Various fuel cell thermodynamic parameters are fed to the F/C open circuit voltage and internal resistance block. From these variables the open circuit voltage and internal resistance of each fuel cell are computed and fed out to the F/C Thevenin equivalent voltage and resistance block and the current and power calculations block. In the Thevenin equivalent block, the three fuel cell outputs are combined to provide a single equivalent resistance and voltage. These are sent to the bus voltage block and the current and power calculations block. All the d-c currents simulated out on the various d-c busses are sent to the current and power calculations block. There, along with fuel cell Thevenin resistance and voltage, these signals combine to provide output power signals for use throughout the EPS simulation. A portion of these signals also controls circuit breakers. These sixteen circuit breakers will be opened individually if simulated current through them exceeds their ratings.

If battery A and/or B and/or the postlanding battery (battery C) are connected to the d-c bus network, the current and power calculations block sends out ampere hours expended to the battery A, B, and C open-circuit voltage and internal resistance block. This is done because battery voltage and internal resistance will vary as a function of time and current drawn from the battery. When these values have been computed, they are sent to the bus voltage block.

The bus voltage block takes the incoming d-c bus conductance, fuel cell Thevenin equivalent voltage and internal resistance, and battery A, B, and C voltage and internal resistance and combines these signals to determine main busses A and B, battery busses A and B and postlanding bus voltages. Battery to bus tie switch positions from the EPS logic program determine which batteries, if any, are paralleled onto the d-c busses. When the battery charger is on and connected to a battery, that battery is inhibited from being connected to any d-c bus. Upon C/M-S/M separation, all fuel cell inputs to the d-c busses are disconnected. If power is disconnected from any of the d-c busses, the diode current direction calculation block will determine if d-c power can reach that bus through alternate paths. These determinations will be based on SCM switch positions.

2.11.2.5 EPS Displays Simulation.

The purposes of the EPS displays simulation is to provide the IOS and the SCM with visual indications of the EPS simulated status. This section also conditions EPS signals for telemetry transmission. A block diagram of the EPS displays simulation appears in figure 2-55.

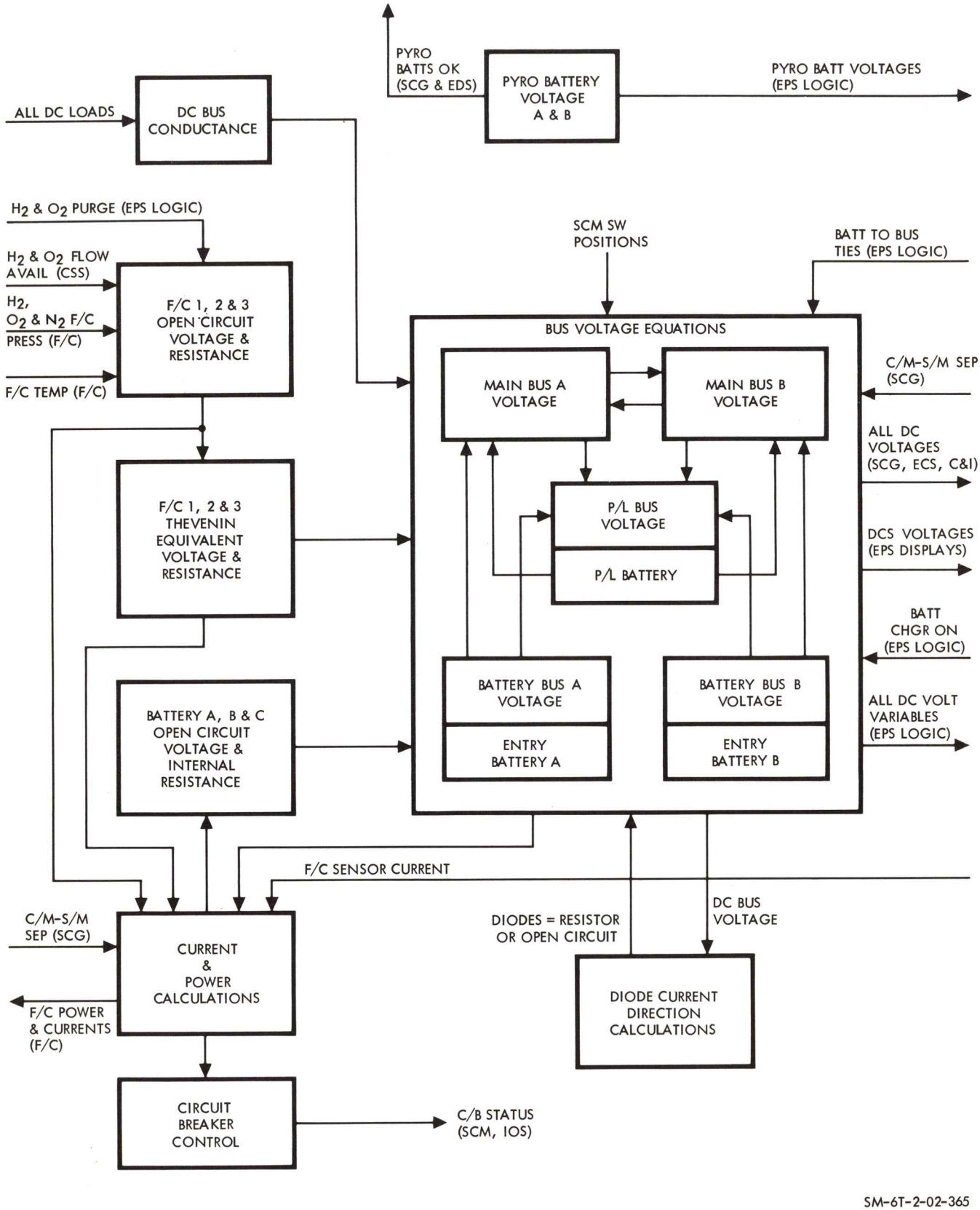

Figure 2-54. EPS D-C Bus Simulation

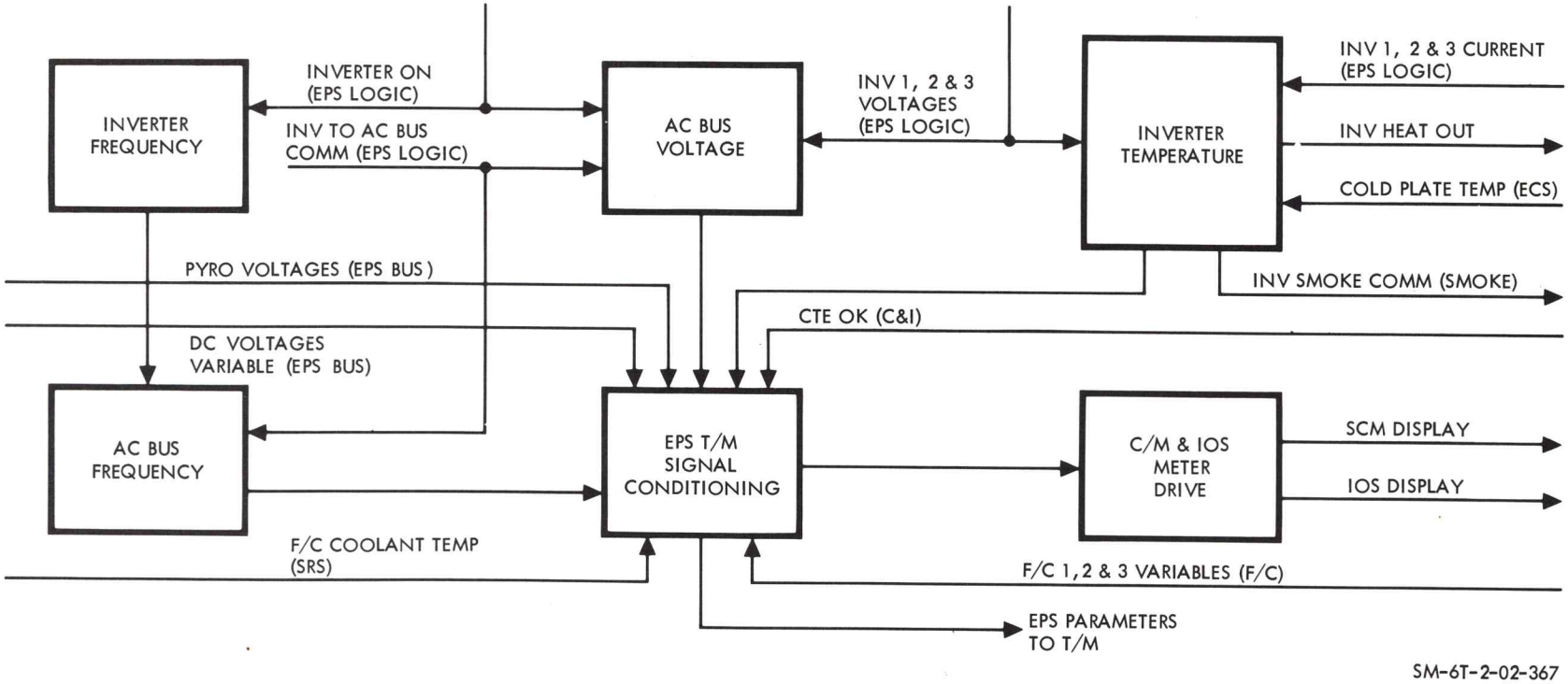

Figure 2-55. EPS Displays Simulation

The inverter frequency block receives inverter-on signals from the EPS displays section. When an inverter is on, an in-tolerance output frequency is simulated, unless a malfunction has been inserted to cause the frequency to be out of tolerance. These frequencies are sent to the a-c bus frequency block. The a-c bus frequency block also receives indications as to which inverter is connected to each a-c bus. These facts are combined to provide the frequency for each phase of both a-c busses. This information is then fed to the EPS T/M signal conditioning block. The a-c bus voltage block recives both inverter-on and inverter-to-a-c bus connect signals mentioned above. It also receives inverter 1, 2, and 3 voltages. Together these signals provide the voltage for each a-c bus phase to the EPS T/M signal conditioning block.

The inverter temperature block receives both inverter current and voltage from the EPS logic. These are combined to determine the heat generated in each inverter. The amount of heat given up through glycol cooling is determined by cold plate temperature from the ECS. Inverter temperatures are then sent to the EPS T/M signal conditioning block. If, through malfunction insertion, an excessive inverter temperature is simulated, a signal is sent out to the smoke system causing smoke to issue from the lower equipment bay of the SCM.

The EPS T/M signal conditioning block receives signals from all areas of the EPS simulation. These signals are conditioned and sent to the telemetry system simulation. Many of these EPS variables are also sent to the C/M and IOS meter drive block. There, based on display selector switch positions, certain parameters will be chosen for display in the SCM with repeater displays at the IOS.

2.11.2.6 Space Radiator Simulation.

The main outputs of this program are ECS and EPS coolant temperatures at the radiator outlets. These coolant temperatures are in direct relation to three variables. They are temperature of the coolant into the radiators, coolant flow rate, and radiator temperature. Temperature of the coolant entering the radiators is provided by the ECS or EPS, depending on which radiator equations are being considered. The coolant flow rate is calculated within each radiator using the coolant flow rate within the ECS or EPS, solenoid valve positions to determine bypass flow, coolant viscosity, and radiator flow resistance.

Radiator temperatures are computed for each radiator individually. Radiator temperature is varied as a function of coolant temperature fed into the radiator and energy received by the radiator from the environment. Temperature of the coolant fed into each radiator is provided by the respective system (ECS or EPS) simulation program. Determining the effect of the environment on the radiators includes computing position of each radiator with respect to the sun's rays and the sun's rays reflected off the earth's surface. Compensation is made for the earth's angle of reflection of the sun's rays and for the spacecraft passing through the earth's shadow.

After all these terms have been combined to determine coolant temperature within each radiator, a further calculation is made to determine the coolant temperature after it is mixed with the coolant which has bypassed the radiators. This is done by comparing the coolant flow rate within the ECS or EPS with the radiator flow rates. The difference between these two is the bypass flow. The volume and temperature of the bypass flow is then compared to the volume and temperature of the coolant coming from the radiators, the product being the mixed coolant temperature.

2.12 ENVIRONMENTAL CONTROL SYSTEM (ECS).

2.12.1 ECS CONFIGURATION REFERENCE.

The ECS in the AMS accurately simulates the environmental control system in S/C 012. Figures 2-56 through 2-59 are schematic diagrams of the actual S/C 012 ECS subsystems. Indicated in these figures are AMS malfunctions at their point of effect in the system. Telemetry pickoff points are also labeled on these figures.

2.12.2 ECS SIMULATION.

ECS hardware in the AMS is limited to the controls and displays. All oxygen, water, coolant, waste water, and variables, such as masses, flow rates, quantities and temperatures are computed. The actual environment of the AMS command module is controlled by the environmental system. The interface between these two systems is functional in that command module temperature controls, in addition to providing inputs to the ECS simulation section of the computer, establish the control temperature for the AMS air conditioner. Use of water from the potable water outlets will also provide inputs to the computer even though the water is provided from an external source.

2.12.2.1 ECS Oxygen Subsystem Simulation.

The simulated ECS oxygen subsystem has been divided into blocks for computer mechanization. These blocks are the oxygen pressure supply, oxygen surge tank, ECS oxygen pressure regulators, and ECS oxygen supply manifold blocks. Each block has a group of equations within the computer for maintaining temperatures, pressures, and quantities, and feeding these values to C/M and IOS readouts. Figure 2-60 shows each block of the oxygen subsystem simulation. The oxygen supply line blocks keeps track of the total simulated oxygen inflow to the ECS by summing the outputs from the two simulated oxygen tanks. These two signals come from the CSS simulation section in the computer. The oxygen accumulated in the supply line is simulated by adding the oxygen inflow and subtracting the oxygen flow out through the regulator assembly from the previous oxygen mass in the supply line during the previous iteration. This block also controls simulation of oxygen volume, temperature, and pressure within the high-pressure supply line. Oxygen demands by other ECS computations and simulated CSS inputs are received by these equations and used to determine simulated ECS total oxygen demand.

The oxygen surge tank block determines the simulated mass flow rates, mass accumulation rate, pressure, temperature, rate of temperature change, and total mass contained within the surge tank. Inputs to this group of equations come from the oxygen supply line block. The oxygen pressure regulators simulation block computes the mass flow rates through the oxygen regulators pressure relief valves. This is based on oxygen supply manifold demands and supply line inputs. The oxygen supply manifold block provides the means for determining simulated pressure and temperature within the oxygen supply manifold. Oxygen mass flow rate through the manifold is also computed within this block.

2.12.2.2 ECS Water Storage Subsystem Simulation.

For purposes of simulation, the water storage subsystem of the ECS is divided into six sections. Each section is simulated by a group, or block, of equations. These blocks are diagramed in figure 2-61. The following paragraphs describe the functions performed within each block.

The water storage pressurization block computes the simulated volume and weight of oxygen within the water subsystem. Also figured is the O_2 flow rate into and out of the subsystem and whether oxygen flow into the subsystem is possible, as determined by position of manual regulator select valves in the SCM.

The potable water storage block simulates the weight, inflow rate, and temperature of food probe hot water for the potable water supply. This block also determines whether fuel cell water will flow into the potable or waste water tank, whether water is available from the fuel cells, and if the water system can accept it. Electrical operations simulated include large and small food probe water heaters, heater power available and circuit breaker loads. Actual water flow through the food water probes and the water demand tubes is metered and fed into the computer to cause a decrease in the simulated potable water available.

Simulated water flow rate into the waste water tank and the weight of water in the waste water tank are computed in the waste water storage block. This group of equations also simulates the two additional water storage tanks in the fuel cell water input line.

The equations of the water accumulator block simulate the operation of the two water accumulators. Accumulator water inflow rates from the suit heat exchange are integrated with accumulator water outflow to the waste water tank or overboard to calculate the amount of water in either accumulator. The timing cycle of 10 minutes of accumulation and 10 seconds of purge is also simulated by the block.

The water accumulator pressurization block determines the oxygen flow rates into and out of the accumulators and the weight of oxygen contained in the accumulators. The water storage readout block provides command module and IOS water indications after it determines if indicator power is available for C/M indicators. This group of equations also determines if waste water is available for evaporative cooling simulation.

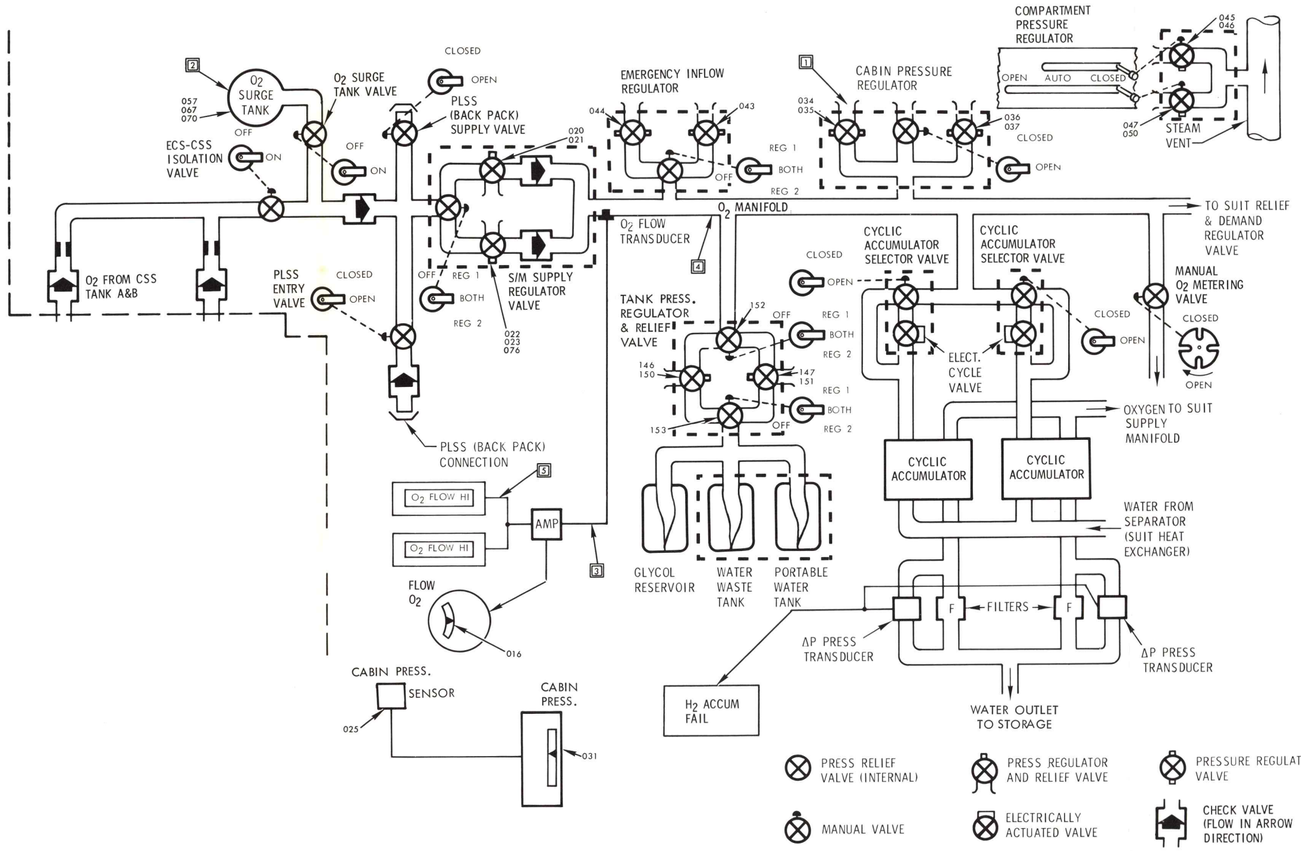

ECS OXYGEN SUBSYSTEM MALFUNCTIONS	
MALF. NO.	MALFUNCTION DESCRIPTION
EC 016	OXYGEN FLOW INDICATOR FAILS
EC 020	O_2 PRESS. REGULATOR NO. 1 FAILS OPEN
EC 021	O_2 PRESS. REGULATOR NO. 1 FAILS CLOSED
EC 022	O_2 PRESS. REGULATOR NO. 2 FAILS CLOSED
EC 023	O_2 PRESS. REGULATOR NO. 2 FAILS OPEN
EC 025	CABIN PRESS. SENSOR FAILS
EC 030	C/M INNER STRUCTURE PUNCTURED
EC 031	CABIN O_2 PRESS. INDICATOR FAILS
EC 034	CABIN O_2 PRESSURE REGULATOR NO. 1 FAILS OPEN
EC 035	CABIN O_2 PRESSURE REGULATOR NO. 1 FAILS CLOSED
EC 036	CABIN O_2 PRESSURE REGULATOR NO. 2 FAILS CLOSED
EC 037	CABIN O_2 PRESSURE REGULATOR NO. 2 FAILS OPEN
EC 043	O_2 EMERGENCY INFLOW REGULATOR VALVE NO. 2 FAILS CLOSED
EC 044	O_2 EMERGENCY INFLOW REGULATOR VALVE NO. 1 FAILS OPEN
EC 045	CABIN INNER PRESS. RELIEF VALVE FAILS OPEN
EC 046	CABIN INNER PRESS. RELIEF VALVE FAILS CLOSED
EC 047	CABIN OUTER PRESS. RELIEF VALVE FAILS OPEN
EC 050	CABIN OUTER PRESS. RELIEF VALVE FAILS CLOSED
EC 055	CABIN PRESSURE RELIEF VALVE LEAKS
EC 057	O_2 SURGE TANK LEAK-1/7 MAX. LEAKAGE RATE
EC 067	O_2 SURGE TANK LEAK-2/7 MAX. LEAKAGE RATE
EC 070	O_2 SURGE TANK LEAK-4/7 MAX. LEAKAGE RATE
EC 076	O_2 S/M SUPPLY REG VALVE NO. 2 FAILS - LEAKING
EC 146	TANK PRESS. CONTROL RELIEF VALVE NO. 1 FAILS OPEN
EC 147	TANK PRESS. CONTROL RELIEF VALVE NO. 2 FAILS OPEN
EC 150	TANK PRESS. CONTROL RELIEF VALVE NO. 1 FAILS (LEAKING)
EC 151	TANK PRESS. CONTROL RELIEF VALVE NO. 2 FAILS (LEAKING)
EC 152	TANK PRESS. CONTROL INLET SELECTOR FAILS (LEAKING)
EC 153	TANK PRESS. CONTROL OUTLET SELECTOR FAILS (LEAKING)

ECS OXYGEN SUBSYSTEM T/M SIGNALS		
NO.	SIGNAL DESCRIPTION	T/M CODE
1	PRESSURE-CABIN	CF 0001P
2	PRESSURE-SURGE TANK	CF 0006P
3	FLOW RATE-ECS O_2	CF 0035R
4	PRESSURE-OUTLET O_2 REGULATED SUPPLY	CF 0036P

SM-6T-2-02-317A

Figure 2-56. ECS Oxygen Subsystem

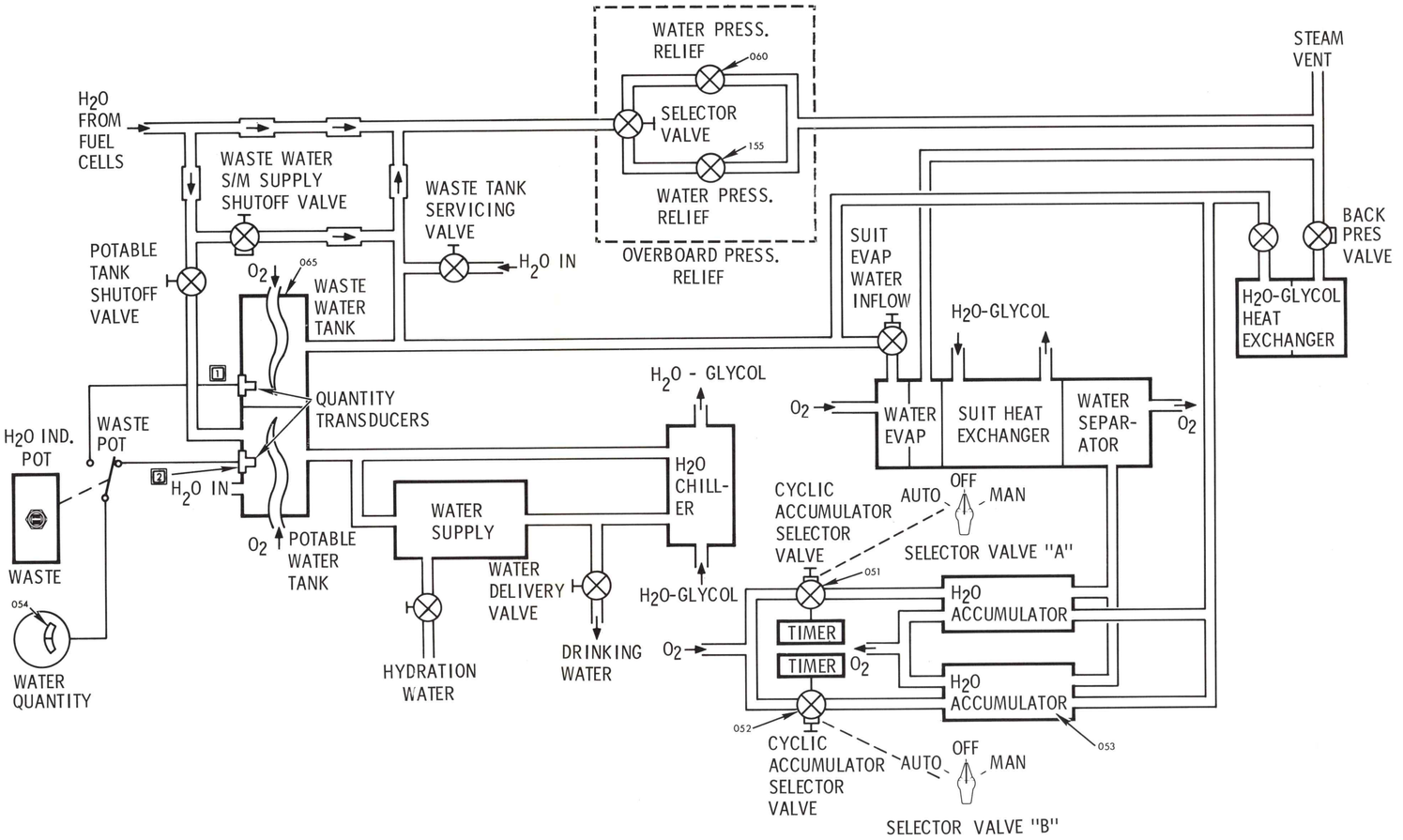

SM-6T-2-02-314A

ECS WATER SUBSYSTEM MALFUNCTIONS	
MALF. NO.	MALFUNCTION DESCRIPTION
EC 051	WATER ACCUMULATOR NO. 1 AUTO VALVE FAILS CLOSED
EC 052	WATER ACCUMULATOR NO. 2 AUTO VALVE FAILS OPEN
EC 053	WATER ACCUMULATOR NO. 2 DIAPHRAM LEAKS
EC 054	WATER QUANTITY INDICATOR FAILS TO ZERO
EC 060	WATER PRESS. RELIEF VALVE NO. 1 FAILS OPEN
EC 065	WASTE WATER TANK LEAKS SLDWLY
EC 155	WATER PRESS. RELIEF VALVE NO. 2 FAILS OPEN

ECS WATER SUBSYSTEM T/M SIGNALS		
NO	SIGNAL DESCRIPTION	T/M CODE
1	QUANTITY WASTE WATER TANK	CF 0009Q
2	QUANTITY POTABLE WATER TANK	CF 0010Q

Figure 2-57. ECS Water Storage Subsystem

ECS WATER-GLYCOL SUBSYSTEM T/M SIGNALS		
NO.	SIGNAL DESCRIPTION	T/M CODE
1	TEMPERATURE-CABIN	CF0002T
2	PRESSURE GLYCOL PUMP OUTLET	CF0016P
3	TEMPERATURE GLYCOL EVAPORATOR OUTLET STEAM	CF0017T
4	TEMPERATURE GLYCOL EVAPORATOR OUTLET LIQUID	CF0018T
5	QUANTITY GLYCOL ACCUMULATOR	CF0019Q
6	TEMPERATURE SPACE RADIATOR OUTLET	CF0020T
7	BACK PRESS. GLYCOL EVAPORATOR	CF 0034P

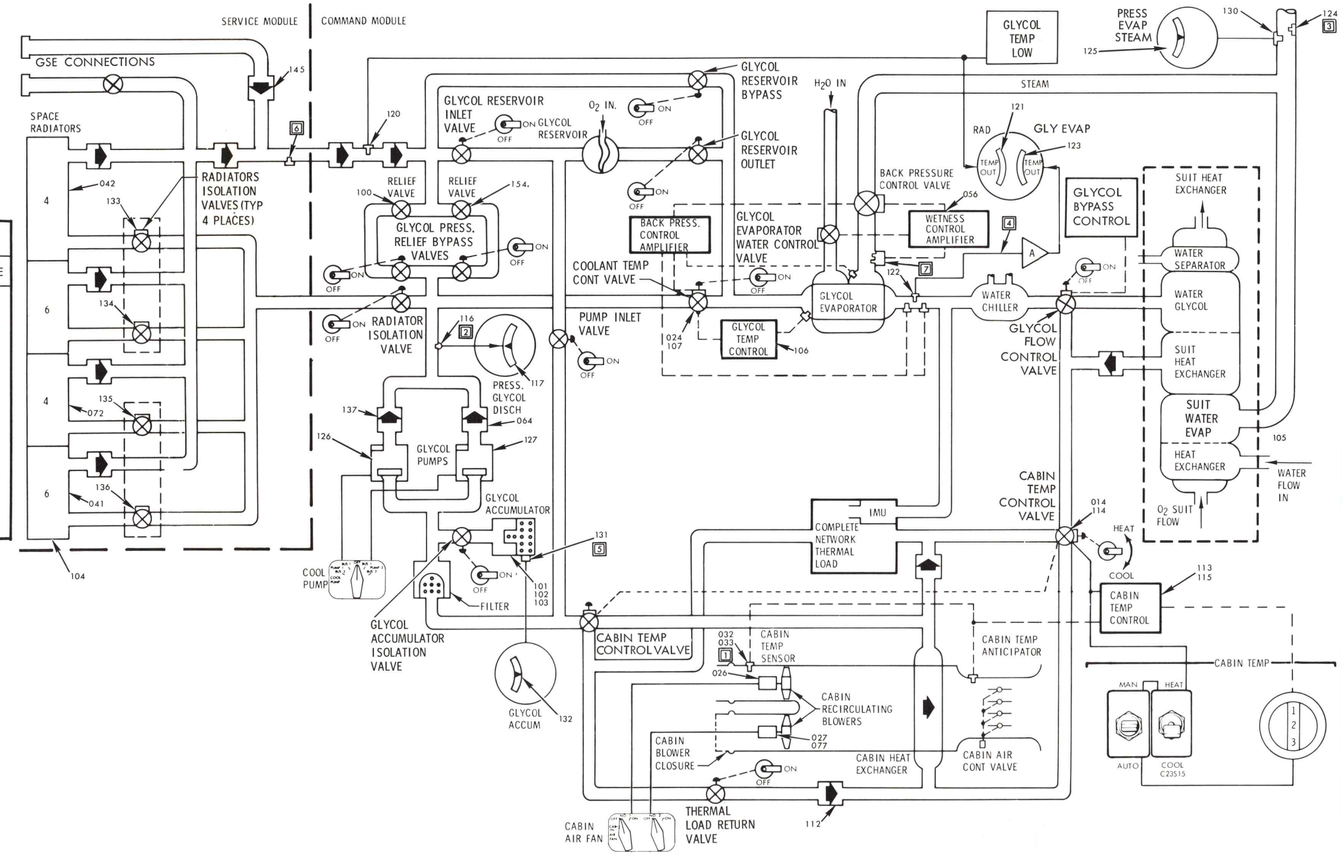

ECS WATER-GLYCOL SUBSYSTEM MALFUNCTIONS	
MALF. NO.	MALFUNCTION DESCRIPTION
EC 014	CABIN TEMP CONTROL VALVE MOTOR FAILS
EC 024	GLYCOL TEMP CONTROL VALVE MOTOR FAILS
EC 026	CABIN FAN NO. 1 FAILS
EC 027	CABIN FAN NO. 2 FAILS
EC 041	SPACE RADIATOR 1B LEAKS
EC 042	SPACE RADIATOR 2A LEAKS
EC 056	WETNESS CONTROL AMPLIFIER FAILS (VALVE CLOSED)
EC 064	GLYCOL PUMP OUTLET CHECK VALVE FAILS TO CLOSE
EC 072	SPACE RADIATOR 2B LEAKS
EC 077	CABIN FAN NO. 2 FAILS
EC 100	RADIATOR RELIEF VALVE BRANCH A FAILS CLOSED
EC 101	GLYCOL ACCUMULATOR LEAK - 1/7 MAX.
EC 102	GLYCOL ACCUMULATOR LEAK - 2/7 MAX.
EC 103	GLYCOL ACCUMULATOR LEAK - 4/7 MAX.
EC 104	RADIATOR LEAK
EC 105	GLYCOL LEAK IN HEAT EXCHANGER
EC 106	GLYCOL EVAPORATOR CONTROL AMPLIFIER FAILS
EC 107	HEAT BY-PASS VALVE MOTOR FAILS
EC 112	CABIN HEAT EXCHANGER CHECK VALVE FAILS
EC 113	CABIN HEAT EXCHANGER TEMP CONT AMPLIFIER FAILS
EC 114	CABIN HEAT EXCHANGER TEMP CONT VALVE FAILS
EC 115	CABIN AUTOMATIC TEMP CONTROL FIALS
EC 116	GLYCOL DISCHARGE PRESSURE SENSOR FAILS
EC 117	GLYCOL DISCHARGE PRESS. INDICATOR FAILS
EC 120	RADIATOR TEMP SENSOR FAILS
EC 121	GLYCOL RADIATOR TEMP OUT INDICATOR FAILS
EC 122	GLYCOL EVAPORATOR OUTLET TEMP SENSOR FAILS
EC 123	GLYCOL EVAPORATOR OUTLET TEMP INDICATOR FAILS MIN
EC 124	STEAM OUTLET TEMP SENSOR FAILS
EC 125	EVAPORATOR STEAM PRESSURE INDICATOR FAILS
EC 126	GLYCOL PUMP NO. 1 FAILS
EC 127	GLYCOL PUMP NO. 2 FAILS
EC 130	STEAM OUTLET PRESSURE SENSOR FAILS
EC 131	GLYCOL ACCUMULATOR QUANTITY SENSOR FAILS
EC 132	GLYCOL ACCUMULATOR QUANTITY INDICATOR FAILS
EC 133	RADIATOR VALVE NO. 1 FAILS
EC 134	RADIATOR VALVE NO. 2 FAILS
EC 135	RADIATOR VALVE NO. 3 FAILS
EC 136	RADIATOR VALVE NO. 4 FAILS
EC 137	GLYCOL PUMP OUTLET CHECK VALVE NO. 1 FAILS
EC 145	GLYCOL CHECK VALVE FAILS - LEAKING GLYCOL TO GSE CONNECTION
EC 154	GLYCOL RELIEF VALVE NO. 2 FAILS

SM-6T-2-02-316A

Figure 2-58. ECS Water Glycol Subsystem

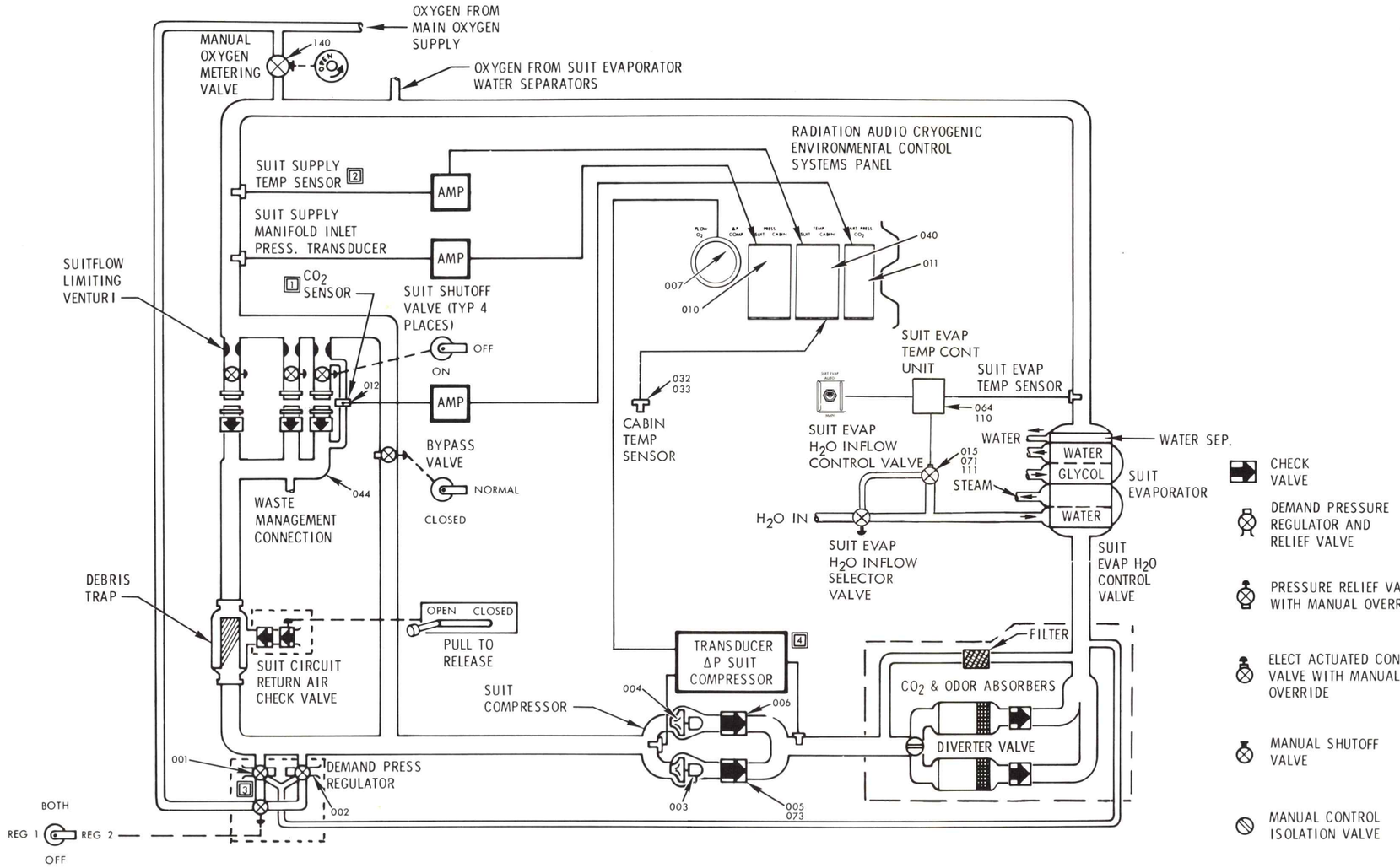

ECS CABIN/SUIT SUBSYSTEM MALFUNCTIONS	
MALF NO.	MALFUNCTION DESCRIPTION
EC 001	NO. 1 SUIT RLF & DEMAND REGULATOR VALVE FAILS (LEAKING)
EC 002	NO. 2 SUIT RLF & DEMAND REGULATOR VALVE FAILS (LEAKING)
EC 003	NO. 1 SUIT COMPRESSOR MOTOR FAILS
EC 004	NO. 2 SUIT COMPRESSOR MOTOR FAILS
EC 005	NO. 1 COMPRESSOR OUTLET CHECK VALVE LEAKING
EC 006	NO. 2 COMPRESSOR OUTLET CHECK VALVE LEAKING
EC 007	DELTA P COMPRESSOR INDICATOR FAIL (MIN)
EC 010	SUIT PRESSURE INDICATOR FAILS (MAX.)
EC 011	CO_2 PARTIAL PRESSURE INDICATOR FAILS (MAX.)
EC 012	CO_2 PARTIAL PRESSURE SENSOR FAILS
EC 013	SUIT CIRCUIT LEAKS INTO CABIN
EC 015	SUIT EVAP WATER INFLOW CONTROL VALVE FAILS (LEAKING)
EC 032	CABIN TEMP SENSOR FAILS (MIN)
EC 033	CABIN TEMP SENSOR FAILS (MAX.)
EC 040	CABIN TEMP INDICATOR FAILS (MIN)
EC 061	SUIT EVAP TEMP CONTROL UNIT FAILS (VALVE STAYS CLOSED)
EC 071	SUIT EVAP WATER INFLOW CONTROL VALVE FAILS (CLOSED)
EC 073	SUIT COMPRESSOR OUTLET CHECK VALVE NO. FAILS
EC 110	SUIT EVAP TEMP CONTROL UNIT FAILS (VALVE STAYS OPEN)
EC 111	SUIT EVAP WATER INFLOW CONTROL VALVE FAILS (OPEN)
EC 140	MANUAL O_2 METERING VALVE FAILS (LEAKING WHEN CLOSED)

CHECK VALVE

DEMAND PRESSURE REGULATOR AND RELIEF VALVE

PRESSURE RELIEF VALVE WITH MANUAL OVERRIDE

ELECT ACTUATED CONTROL VALVE WITH MANUAL OVERRIDE

MANUAL SHUTOFF VALVE

MANUAL CONTROL ISOLATION VALVE

SELECTOR VALVE MANUAL

OFF / ON DENOTES MANUAL CONTROL

ECS CABIN/SUIT SUBSYSTEM T/M SIGNALS		
NO	SIGNAL DESCRIPTION	GOSS NO.
1	CO_2 PARTIAL PRESSURE	CF0005P
2	SUIT SUPPLY MANIFOLD TEMPERATURE	CF0008T
3	SUIT DEMAND REGULATOR SENSOR PRESSURE	CF0012P
4	SUIT COMPRESSOR DIFFERENTIAL PRESSURE	CF0015P

SM-6T-2-02-315A

Figure 2-59. ECS Cabin/Suit Subsystem

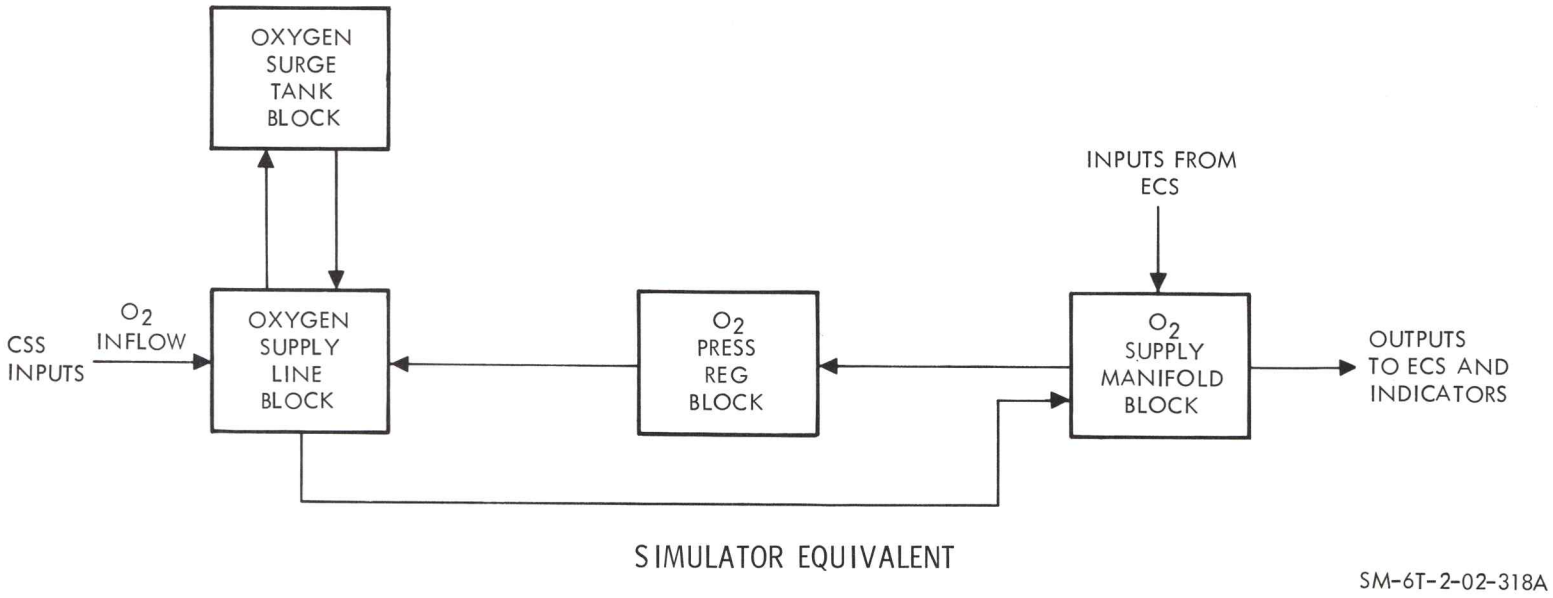

Figure 2-60. ECS Oxygen Subsystem Simulation

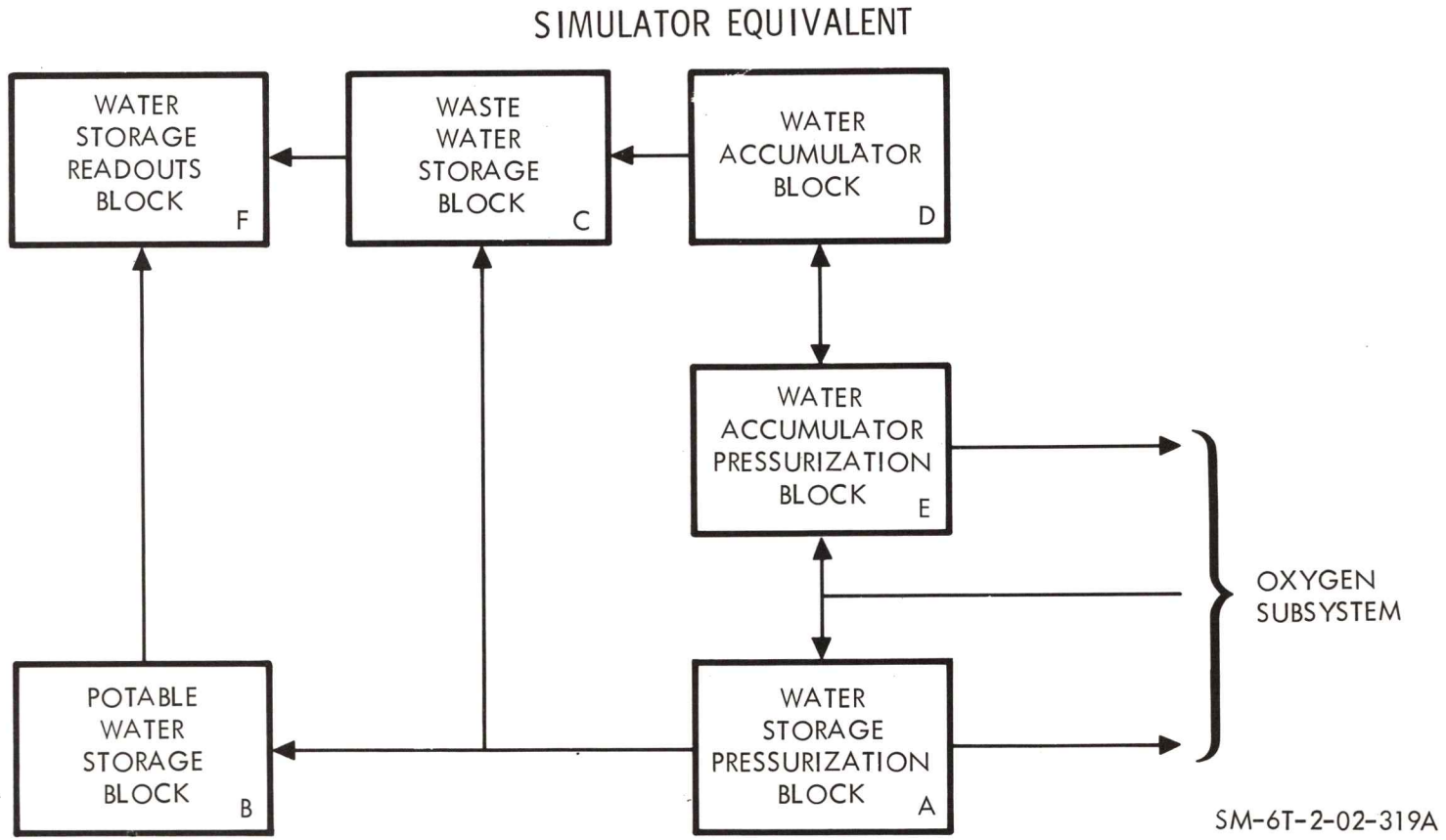

Figure 2-61. ECS Water Storage Subsystem Simulation

2.12.2.3 ECS Water-Glycol Subsystem Simulation.

The function of the simulated ECS water-glycol subsystem is to provide simulation of the required temperature control capabilities. Operation of AMS command module temperature controls by the crew members causes inputs to be sent to the ECS simulation section of the computer and also to the AMS air conditioner to actually control command module temperature. In the computer, these inputs act as independent variables to cause changes in simulated temperatures and flow rates. Prolonged or complete failure of the real system will cause catastrophic results if not corrected. Malfunctions of this type are included in the capabilities of the simulated water-glycol subsystem.

The water-glycol subsystem simulation is accomplished in blocks of equations within the AMS computer, as are most spacecraft subsystem simulations. The relationship of each block to the other blocks is illustrated in figure 2-62. The blocks and their purposes are included in the following paragraphs.

The water-glycol flow block is used to determine possible flow paths for the coolant. It also determines if flow is possible through the space radiators, relief valves, storage tank bypass and heat bypass valves, and the mass flow rates through each of these points. The glycol pump status is determined along with the differential pressure across the pump. The temperatures of the coolant coming into the storage tank and into the glycol evaporator are simulated by equations within this block. Other equations provide the simulated position of the cabin temperature control valve. An electrical short circuit may be simulated in the water-glycol subsystem as a simulated malfunction. Two equations are required for this simulation: one to determine if a short circuit is possible and the other to determine if the condition exists.

The water-glycol mass block of the water-glycol subsystem is used to compute simulated flow rates between, and mass within, the water-glycol storage tank and the accumulator, and the flow rate into, and mass within, the glycol system. Flow rates between the three mass containing components of the system are computed as a function of the differential pressures involved.

The glycol evaporator block provides the capability of operating the evaporator in either automatic or manual mode. In the automatic mode, the evaporator control regulates the position of the back-pressure valve in order to provide regulated water-glycol temperature simulation. In the manual mode, the position of the back-pressure valve is directly controlled by the astronaut. The output temperature of the water-glycol is computed as a function of this valve position.

The back-pressure valve manual control block computes and stores the amount of time the manual back-pressure valve is in the on position. This information is used in determining the back-pressure valve orifice area.

Mass flow rate and temperature computations for the water-glycol flowing into and out of the cold plate are the main function of the IMU cold plate block. The simulated transfer of heat is computed in the IMU portion of the computer.

Equations in the suit heat exchanger block describe in detail the operation of the suit heat exchanger. The automatic and manual modes of the heat exchanger are accurately simulated in the AMS. The two types of suit air cooling are simulated for the heat exchanger. These two types are normal exchange of heat between the suit air and the water-glycol, and evaporative cooling if the water-glycol exchange is unable to lower the suit air to the desired temperature. This block computes suit heat exchanger valve and oxygen input valve positions, oxygen and glycol output temperatures, waste water used, waste water generated, and evaporation variables.

Control and operation of the cabin heat exchanger is simulated by the cabin heat exchanger block of equations within the computer. Temperature and flow rate of the water-glycol flowing into and out of the exchanger are computed here. Position of the cabin temperature control valve is also computed in this block as a function of system status, desired cabin temperature, actual cabin temperature, and exchanger output temperature on the cabin air side.

The cabin temperature control valve positioning block simulates the positioning of this valve in the cabin heat exchanger assembly. Because of the rapid simulated changing of the valve position, a high interaction rate is used in the computations. The cabin cold plate simulation calculates the glycol mass flow rate into the cabin cold plate. It also determines the cabin temperature into the cold plate and the rate of change in the cabin temperature. Other factors computed in this block include water-glycol temperatures into and out of the cold plate.

The water-glycol readout block is used to provide computer outputs to drive indicators for most of the water-glycol portion of the ECS. This block also provides simulated water-glycol information to the telemetry system.

The water-glycol subsystem electrical loading and power available block is utilized to determine if the required power is available for the water-glycol subsystem electrical components. The electrical loading of each component of the water-glycol subsystem is computed to determine their effect on the electrical power system. This information is fed back to the EPS.

2.12.2.4 ECS Cabin/Suit Subsystem Simulation.

ECS cabin/suit subsystem simulation is also accomplished in several groups of equations within the computer. This simulated subsystem includes not only the pressure suit, but also the cabin air parameters and air conditioning unit control computations. Figure 2-63 describes the relationship between the groups of equations in block diagram form. The following paragraphs explain the function of each of these blocks.

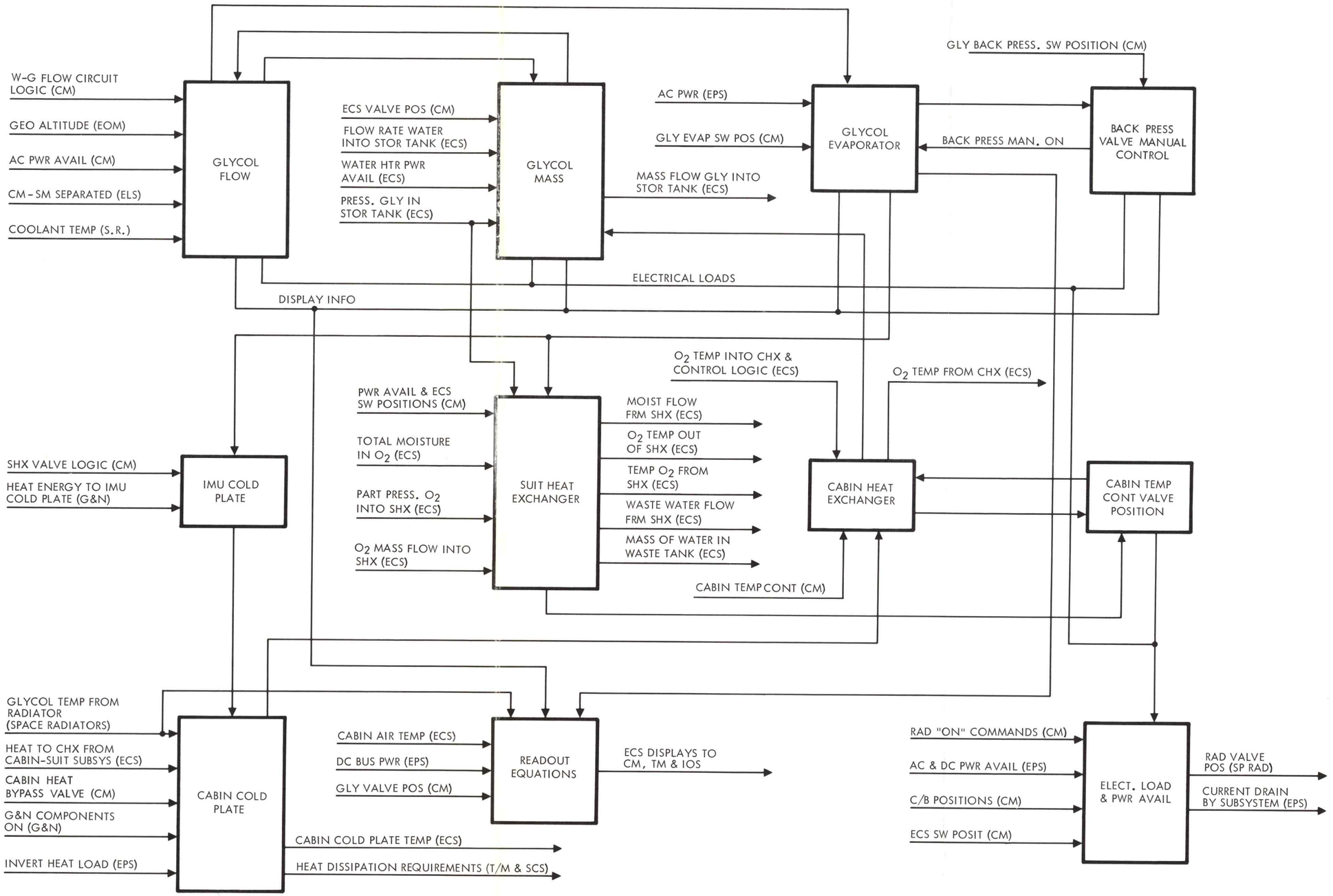

SM-6T-2-02-385

Figure 2-62. ECS Water-Glycol Subsystem Simulation

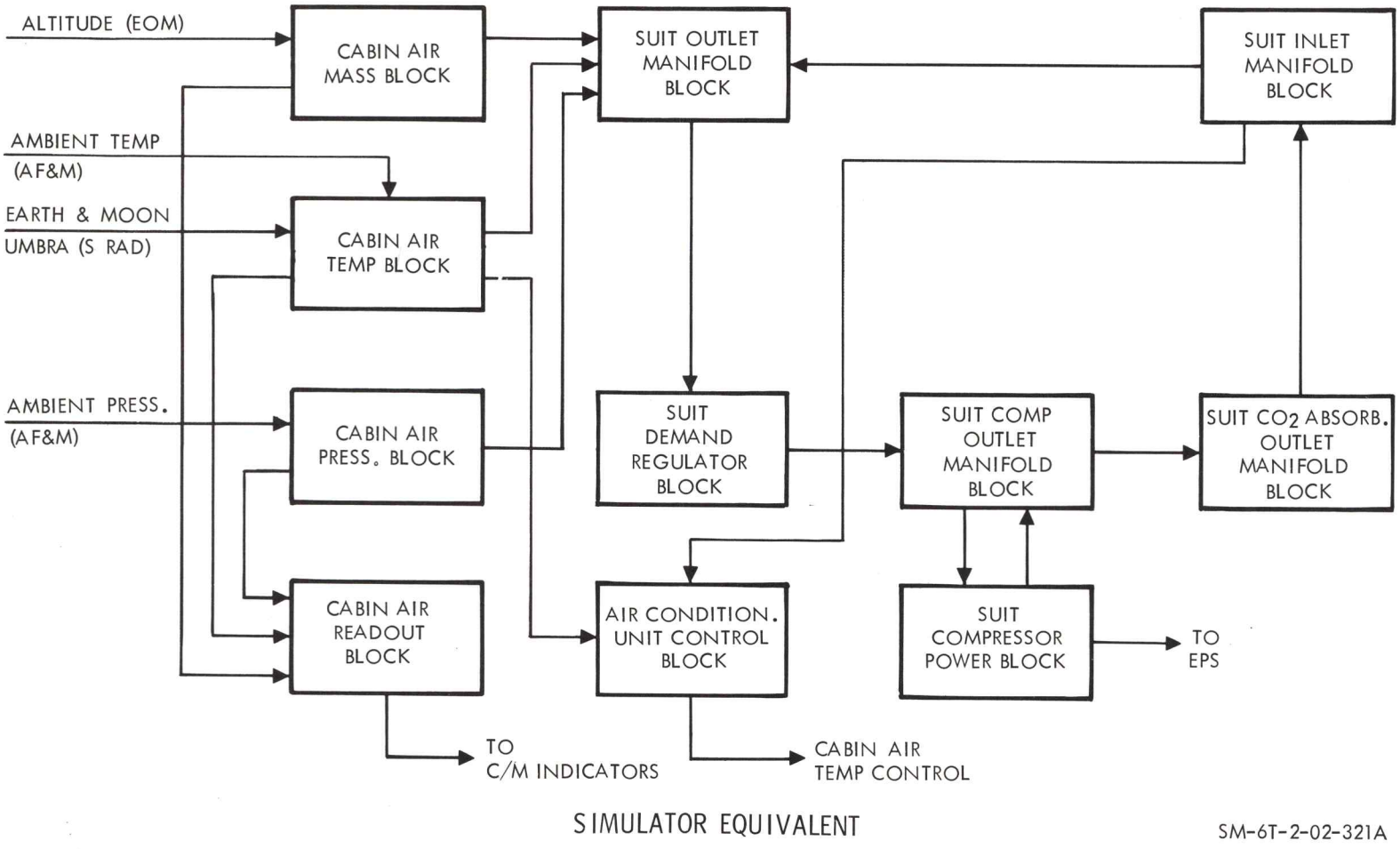

Figure 2-63. ECS Cabin/Suit Subsystem Simulation

The cabin air mass block provides computation of the air mass within the C/M and air mass flow into and out of the cabin. It also determines cabin air valve positions. Current drawn by these valves is provided to the EPS. On-off conditions of the cabin air fans and power requirements are determined here.

The cabin air temperature block calculates cabin heat exchanger energy transfer, radiation effect, entry heat effect, cabin temperature change rate, and the overall effect of these variables on cabin temperature. Temperature outside the C/M is included in these computations, as is vehicle location with respect to the sun and earth. Cabin pressure is computed in the cabin air pressure block using cabin air temperature and oxygen mass within the cabin. Pressure outside the vehicle is used in determining C/M absolute pressure. Cabin temperature and pressure indicators in the C/M are controlled by the cabin air readout block. This block also provides telemetry signals for these two cabin air parameters.

The air conditioning unit control block is used to control the actual simulator environment. The equations within the block provide computer control of the simulator cabin and suit temperature. These temperatures are directly controlled by the computer outputs of suit and cabin temperature. Maximum and minimum temperature limits are provided for crew safety.

The suit circuit demand regulator block simulates the oxygen flow characteristics from the regulator to the CO_2 absorber outlet manifold. This oxygen flow is required to replace gas which is decomposed by crew breathing, and to replace oxygen relief flow from the suit circuit to the cabin. Equations of this block also establish an actual suit circuit reference pressure. This ensures that the suits maintain a pressure slightly greater than that of the SCM.

The suit inlet manifold block combines oxygen inputs from the manual oxygen metering valve and the suit exchanger and, as a function of the suit inlet pressure, simulates the temperature, pressure, mass, and flow rates to the suits, cabin, and/or the suit bypass valve. The suit outlet manifold block simulates gases from the suit return, cabin return, and suit bypass flow for its overall computations of pressure, gas flow, heat, temperature increase, and mass. Each of the branches of flow, each suit, cabin flow, and suit bypass is also calculated individually. The suit compressor outlet manifold block determines the compressor differential pressure, compressor flow, compressor heat transfer and compressor output volume, pressure, and temperature.

The suit circuit CO_2 absorber outlet manifold block computes the mass content and flow through the CO_2 absorbers and absorber bypass. By considering the characteristics of the simulated incoming gas, these equations contain simulated temperatures, pressure, outlet flow, and mass. The gas composition is also simulated in this block to furnish partial pressures and individual gas flows to blocks of simulation whose equations require this information.

The suit circuit compressor power block computes the compressor power and current relationships for use in the compressor outlet manifold block. This information is also fed to the EPS section of the computer for total power consumption calculations.

2.12.3 AMS ENVIRONMENT SYSTEM.

2.12.3.1 SCM Environment.

The simulated ECS provides control for the simulator command module temperature, humidity, suit pressure, and cabin fans. It also provides waste management, water, and smoke for simulating a command module fire.

Command module temperature may be controlled either automatically or manually from a maintenance panel in the equipment racks. Nominal temperature establishment is a maintenance function. The astronaut also has a set of controls by which he may control cabin temperature. Both the maintenance panel automatic (normal) control and the astronaut (manual) control will be overridden by the computer during entry. This simulation of entry heat may be overridden or decreased by the IOS operator using the REENTRY HEAT OVERRIDE control. A safety temperature switch is provided to automatically shut off the heating unit if the cabin temperature should exceed safe limits. Humidity is also controlled by this air conditioning unit.

Four compressors provide a pressurized air supply for the four command module suit connectors. The air is raised to a pressure slightly higher than that of the command module, filtered, and sent through the suit circuit. A blower is provided in the suit circuit exhaust to maintain circulation. The suit circuit compressors are also capable of producing increased pressure differentials for simulating malfunctions such as C/M structure punctures, etc. This is accomplished by positioning the suit pressure override dial on the true trainee environment panel of the IOS.

2.12.3.2 Smoke Simulation.

The smoke system (figure 2-64) operates in response to certain malfunction commands to provide smoke within the simulator command module. The smoke system includes heater, two blowers, and a fluid supply.

When the proper malfunctions are selected for simulation, the computer will activate the smoke system; liquid smoke will be placed in an evaporation disk, and the blowers activated. The smoke is expelled into the C/M in the general area of the simulated malfunction. The area in which the smoke is introduced into the C/M is controlled by three solenoid valves as seen in the diagram. These solenoids are controlled by the malfunction selection.

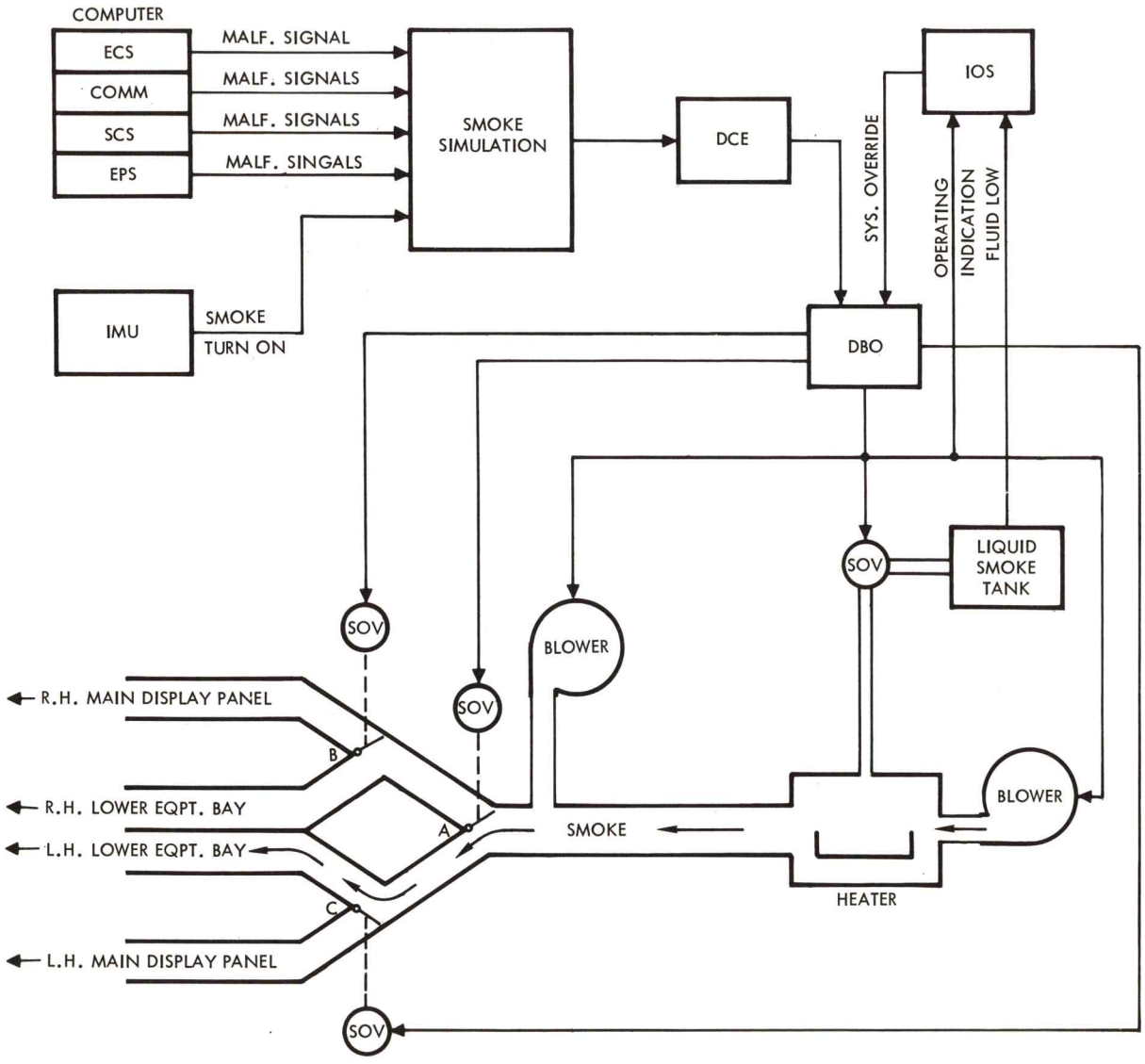

SM-6T-2-02-322

Figure 2-64. Smoke Simulation

In addition to the programed smoke generating malfunctions, the instructor is able to cause smoke in the C/M through use of the MIU control panel. The instructor also has a smoke monitoring section on the IOS. This panel contains an override switch, an OPERATING light, and a FLUID LOW light. Manual control of the smoke system from the MIU allows the instructor to add smoke to other malfunctions which are not programed to do so.

2.12.3.3 Waste Management Subsystem.

Waste management for the simulator ECS is controlled from the urine control panel in the lower equipment bay. There, two unlabeled switches determine system operation. Operation of the system is the same as AF 012 as far as the crew is concerned. A block diagram of the AMS waste management subsystem is shown in figure 2-65. This drawing shows the main difference between the spacecraft system and the simulator system as being the urine storage tank in the simulator, rather than the overboard dump function in the actual system. AMS No. 2 at Cape Kennedy has no waste management system, except the urinal which is connected to a 6-hour capacity tank and associated plumbing.

2.12.3.4 Aural Cue Simulation.

The aural cue simulation system simulates the sounds of an Apollo mission that are external to communications and sounds normally heard in the headsets. The sounds presently simulated are as follows:

- Booster engines aerodynamic noise
- Launch escape main engine
- Entry aerodynamic noise
- 400-cycle inverter noise
- Attitude gyro noise
- Rate gyro noise
- ECS glycol pump
- Cabin fan
- Suit compressor

The aural cue system is controlled from the IOS. Manual switches provide on-off control and db override control to facilitate manual reduction of the noise volume in the C/M. Figure 2-66 is a block diagram of the aural cues simulation. A white noise generator with a level frequency distribution will generate a random noise envelope. The output of the generator is fed to three circuits which control the output amplitude and frequency characteristics of the generator as a function of time and event occurrence. Each circuit consists of a voltage-controlled filter (VCF) and a voltage controlled attenuator. The voltages fed into the filters and amplifiers are outputs of the computer. These voltages control the frequency and amplitude of the output signal. An additional noise generator is used to simulate sounds arising during a-c power generation by the

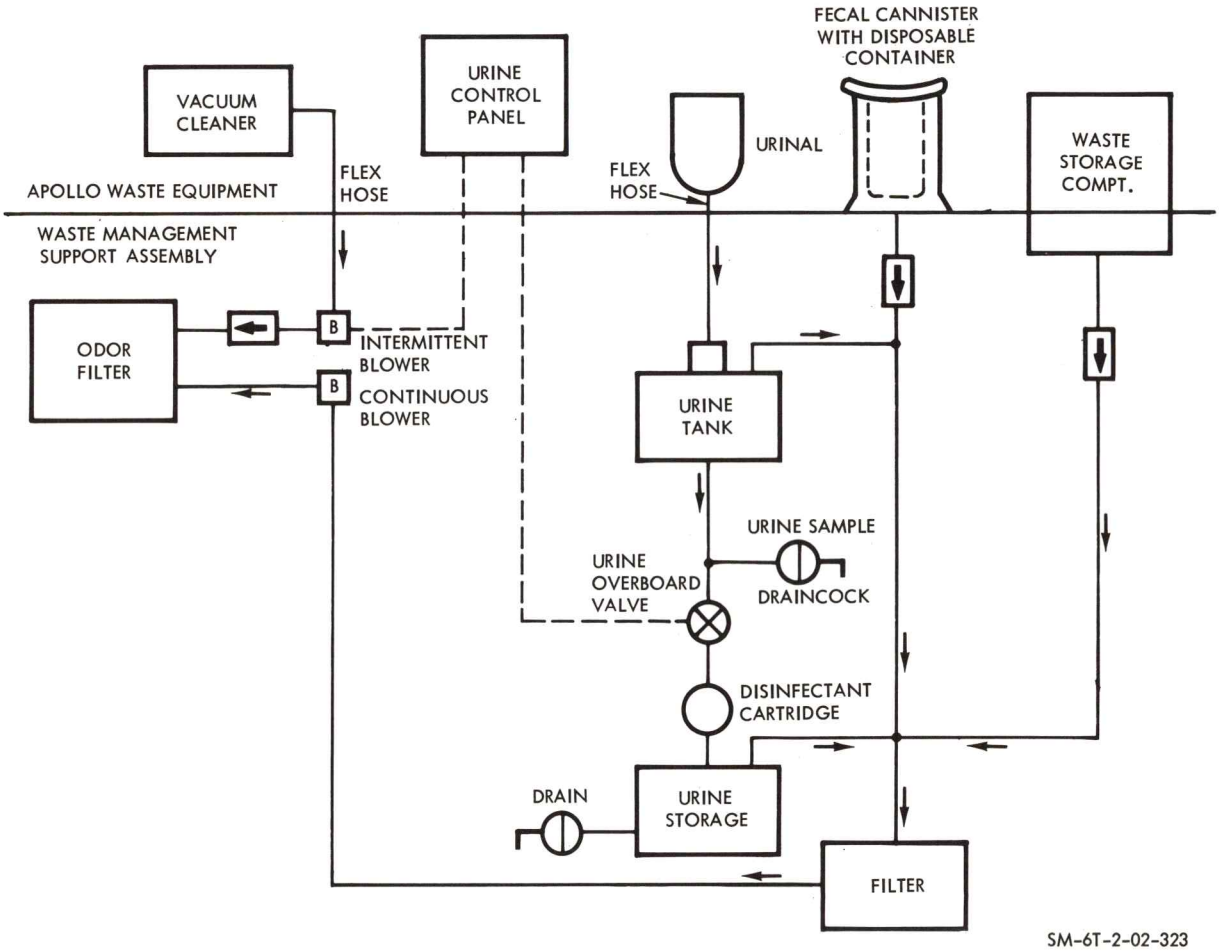

Figure 2-65. Waste Management Subsystem

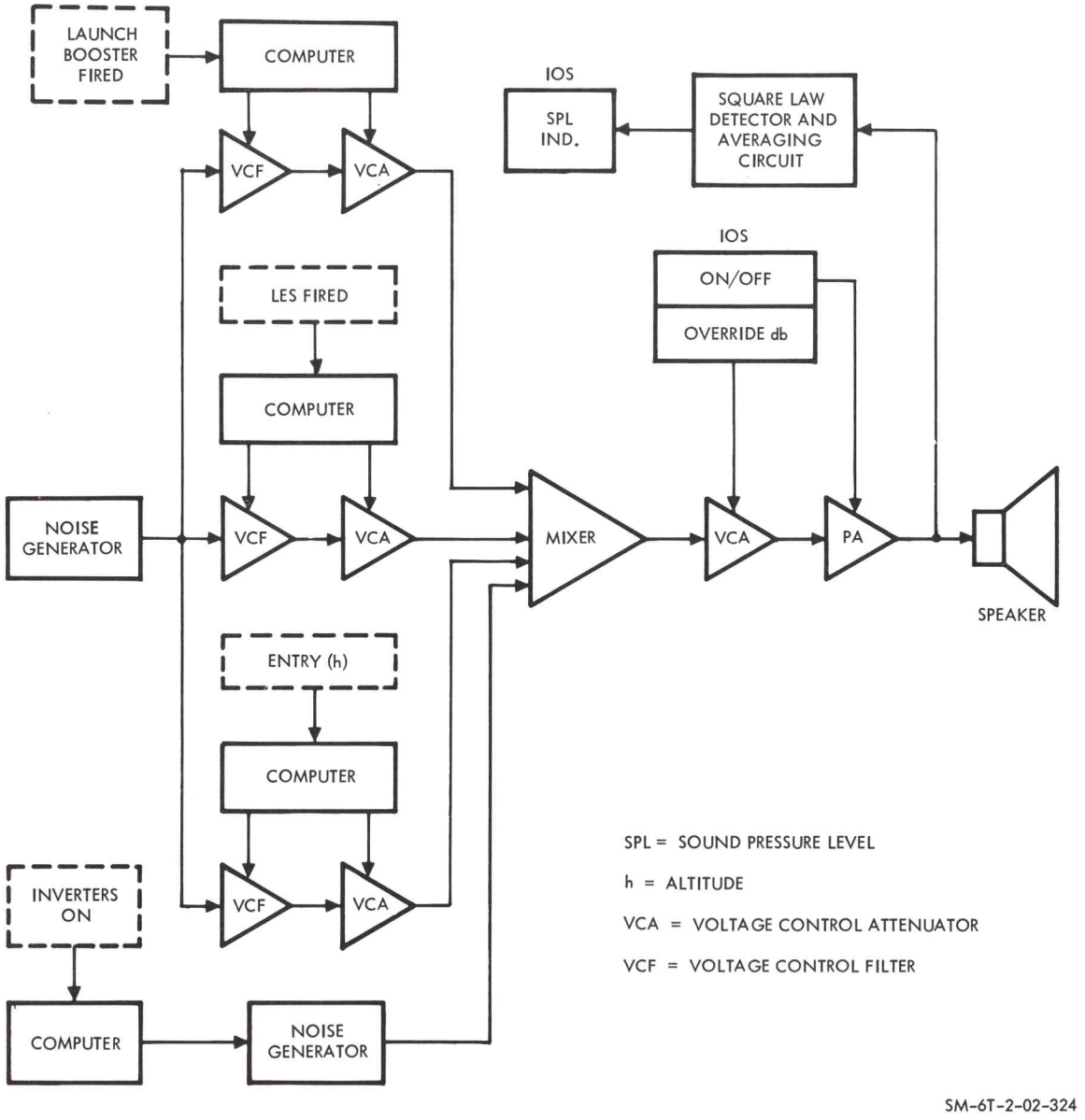

Figure 2-66. Aural Cue Simulation System

st... ...verters. This output plus the three outputs from the voltage-controlled amplifiers are fed through a mixer to another attenuator. The voltage to this attenuator is determined by the IOS OVERRIDE db control. The output of the VCA feeds the power amplifier, which is also controlled from the IOS, through the AURAL CUE ON-OFF switch. The power amplifier output drives the IOS sound pressure level indicator and the speaker at the SCM.

2.13 CAUTION AND WARNING SYSTEM (CWS).

2.13.1 CWS CONFIGURATION REFERENCE.

At the time of this writing, the AMS CWS accurately simulates the CWS in S/C 012. Malfunctions and telemetry points normally listed on actual spacecraft block diagrams are shown on the simulated system drawings. This is done because the CWS is actually a "collecting place" for error signals generated throughout the S/C. Therefore, a block diagram of the actual system would be meaningless.

2.13.2 CWS SIMULATION.

The caution and warning system in the AMS operates in much the same manner as the actual S/C 012 CWS, with the exception of the malfunction insertion capability and power availability computations in the simulator. A block diagram of the simulated CWS in shown in figure 2-67.

The power availability and CW FAIL light block determine when the CWS is operational based on EPS bus inputs and SCM switch positions. If EPS DC power is available to the systems and either CWS power supply No. 1 or CWS power supply No. 2 is switched off, the CW FAIL light will illuminate. This light may also be illuminated by the lamp test switch or by insertion of a malfunction simulating the failure of power supply No. 1.

If CWS power is available, the voltage comparator block compares various system parameters to known limits to determine if an out of tolerance condition exists. These parameters are as follows:

- ECS CO_2 partial pres ure
- ECS glycol temperatur e
- CSS H_2 tank 1 pressure
- CSS H_2 tank 2 pressure
- SPS oxidizer tank pressure
- SPS fuel tank pressure
- SPS thrust chamber outer skin temperature
- S/M RCS A through D temperature
- S/M RCS A through D regulator pressure
- C/M RCS A and B fuel pressure
- C/M RCS A and B oxidizer pressure
- F/C 1, 2, and 3 N_2 pressures
- F/C 1, 2, and 3 H_2 flow rates.
- F/C 1, 2, and 3 condenser exhaust temperatures

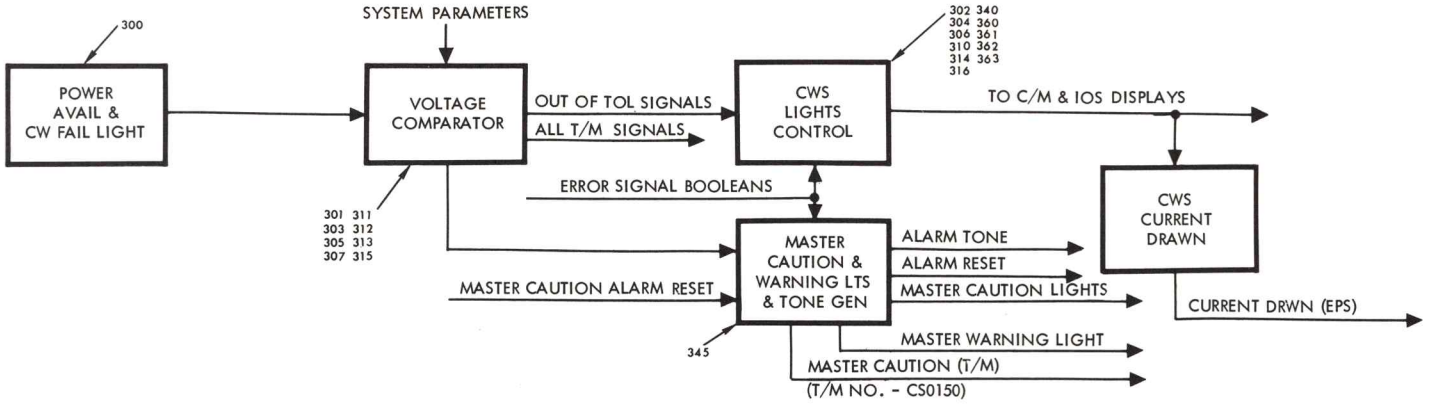

CWS T/M SIGNALS	
SIGNAL DESCRIPTION	T/M CODE
LAUNCH VEHICLE RATE A EXCESSIVE	S0020X
INSTRUMENT UNIT PWR A FAIL	S0025X
BOOSTER ENGINE CHAMBER 1 THROUGH 8	S0030X
PRESSURE A FAIL	S0032X
	S0034X
	S0036X
	S0038X
	S0040X
	S0042X
	S0044X
LIFT OFF SIGNAL A & B	S0060X
	S0061X
EDS ABORT SIGNAL TRANSIENT A & B	S0090X
	S0091X
C/M - S/M PHYSICAL SEPERATION MON B	S0101X
S/M/ADAPTER PHYSICAL SEP A & B	S0120X
	S0121X
LAUNCH VEHICLE GUIDANCE FAIL A	BS0016X
EDS ABORT REQUEST A	CS0080X
C/M - S/M PHYSICAL SEP MONITOR A	CS0100X
MASTER CAUTION - WARNING ON	CS0150X
Q - BALL VECTOR SUM OUTPUT	LS0001V
TOWER PHYSICAL SEP MONITOR A & B	LS0090X
	LS0091X

CWS MALFUNCTIONS	
MALF. NO.	MALFUNCTION DESCRIPTION
ME300	CWS PWR SUPPLY NO. 1 FAILS
ME301	CWS CO_2 PP HI COMPARITOR VOLTAGE DRIFTS LOW
ME302	CWS CO_2 PP HI LAMP DRIVER SHORTED
ME303	CWS GLYCOL TEMP COMPARITOR VOLTAGE DRIFTS LOW
ME304	CWS GLYCOL TEMP LOW LAMP DRIVER SHORTED
ME305	CWS O_2 TANK 2 REFERENCE DRIFTS HIGH-HIGH OR LOW-LOW
ME306	CWS CSS O_2 LAMP DRIVER SHORTED
ME307	CWS SPS TEMP COMPARITOR VOLTAGE DRIFTS HIGH
ME310	CWS S/M RCS (B) LAMP DRIVER SHORTED
ME311	CWS S/M RCS (C) LIGHT WIRE OPEN
ME312	CWS S/M RCS (D) REFERENCE DRIFTS HIGH-LOW OR LOW-HIGH
ME313	CWS S/M RCS (A) LIGHT WIRE OPEN
ME314	CWS S/M RCS (A) LAMP DRIVER SHORTED
ME315	CWS F/C 2 LIGHT WIRE OPEN
ME316	CWS F/C 3 LAMP DRIVER SHORTED
ME320	CWS F/C 1 H_2 FLOW REFERENCE DRIFTS HIGH-HIGH; LOW-LOW
ME321	CWS F/C 2 SKIN TEMP REFERENCE DRIFTS HIGH-LOW; LOW-HIGH
ME322	CWS F/L 1 pH REFERENCE DRIFTS LOW
ME323	CWS F/C 1 H_2 PRESSURE REFERENCE DRIFTS HIGH
ME324	CWS F/C 2 RADIATOR TEMP REFERENCE DRIFTS HIGH
ME325	CWS F/C 2 N_2 PRESSURE REFERENCE DRIFTS HIGH
ME326	CWS F/C 3 O_2 PRESSURE REFERENCE DRIFTS LOW
ME327	CWS F/C 2 O_2 FLOW REFERENCE DRIFTS HIGH-HIGH; LOW-LOW
ME340	CWS SPS PRESS. LAMP DRIVER SHORTED
ME341	CWS S/M RCS REG PRESS. A REF DRIFTS HIGH-HIGH OR LOW-LOW
ME342	CWS SPARE - REFERENCE DRIFTS HIGH-LOW OR LOW-HIGH
ME343	CWS SPARE - REFERENCE DRIFTS HIGH-LOW OR LOW-HIGH
ME344	CWS F/C 3 COND EXHAUST REF DRIFTS HIGH-LOW OR LOW-HIGH
ME345	CWS OPEN WIRE TO MASTER CAUTION LIGHTS
ME360	CWS IMU TEMP LIGHT WIRE OPEN
ME361	CWS G & N ACCEL FAIL LIGHT WIRE OPEN
ME362	CWS EPS DC BUS B LIGHT WIRE OPEN
ME363	CWS EPS H_2O ACCUM LIGHT WIRE OPEN
ME364	CWS SPS PU FAIL LIGHT WIRE OPEN

SM-6T-2-02-376

Figure 2-67. Caution and Warning System Simulation

- F/C 1, 2, and 3 module skin temperatures
- F/C 1, 2, and 3 O_2 regulator output pressures
- F/C 1, 2, and 3 H_2 regulator output pressures
- F/C 1, 2, and 3 O_2 flow rates
- F/C 1, 2, and 3 radiator outlet temperatures
- F/C 1, 2, and 3 water pH factor
- FCS O_2 flow out of supply manifold
- CSS O_2 tank 1 and 2 pressure
- EPS inverters 1, 2, and 3 temperature.

Those parameters which are determined as being out of tolerance cause signals to be sent to the CWS lights control block. These out of tolerance signals cause illumination of the corresponding lamps in the SCM and at the IOS. Direct inputs from the respective systems may also light the CW lamps.

For each CW lamp that illuminates in the SCM, the master caution and warning lights and tone generator block generates signals which cause the MASTER CAUTION indicators to light and the audio alarm tone to be generated. The MASTER WARNING light in the SCM lower equipment bay indicates that a master caution condition exists and that this condition is being telemetered to MSFN. Since this is the only CWS signal sent to telemetry, no special table is provided in the block diagram.

The CWS current drawn block determines the amount of current drawn by the CWS lights and the amount of current passing through each of the two CWS circuit breakers. This information is forwarded to the EPS simulation section of the AMS.

2.14 MSCC INTERFACE PROGRAMS.

During the integrated mode of the operation, the ground support simulation computer (GSSC) provides the same outputs to the AMS as the launch-boost tape during a nonintegrated mode. The variables normally provided by the launch-boost tape are provided in the trajectory link message from the GSSC. A detailed description of the launch-boost is contained in section 3 (AMS Utilization) of this volume of the handbook.

2.14.1 MSCC INTERFACE PROGRAM.

The purpose of the Manned Spaceflight Control Center (MSCC) interface program is to accomplish simulated mission interface between the flight crew in the SCM, the mission control team in the MSCC, and remote site personnel on location and/or in the simulated remote sites. The simulation interface is between the AMS computer and the SCATS-GSSC in the control center. Data transfer (both input and output) is processed in the AMS by the MSCC interface program. The AMS computer is electrically isolated from the SCATS-GSSC by means of the computer-to-computer buffer.

Trajectory simulation in the integrated mode of operation involves both input to the AMS from MSCC and output from the AMS to the MSCC. Each message, both incoming and outgoing, consists of sixty 24-bit words. These 60 words will transmit five times each second. Each message has a time tag specifying when the data is to be used. The time tag is a counter which is pulsed every 200 milliseconds. The time tag is referenced to midnight prior to launch.

A block of 60 core locations in the computer is used to format the outgoing AMS to GSSC message. The MSCC interface program will pack the discretes, as required by the message format, and send the messages out at a rate of five per second to the buffer. The data in the 60-word message must correspond to the message time tag. The information included in the outgoing data message is shown in figure 2-68.

The GSSC to AMS incoming messages (figure 2-68) arrive at the computer-to-computer buffer at a rate of five messages per second. The AMS computer will interrogate the buffer and transfer a message into the computer memory when it is received. The program will then distribute the data to the using programs at the proper time. Interface between this program and the EOM program during integrated mode requires modification of the EOM program. Those EOM equations normally computing translational velocity and position, rotational velocity and position, rotational acceleration and translational acceleration, will be dropped from the AMS computations at various times during integrated operation. When the S-IVB is connected to the spacecraft in the simulation, GSSC supplies all translational and rotational trajectory information. When the spacecraft, without booster, is in a period of free drift, GSSC supplies translational correction data, allowing the AMS to compute rotational data. The GSSC furnishes no trajectory information when CSM or CM is in a period of translational thrust or entry.

The interface between the MSCC interface program and other AMS programs is much simpler than the EOM interface. Data in the incoming message is transferred from the computer memory to the data pool where all intelligence is separated from the message format. The programs requiring this data will then draw it from the data pool.

2.14.2 UP-DATA LINK INTEGRATED MODE.

The up-data link program functions only in the integrated mode of AMS operation. Simulated up-data originates in the MSCC and is received in the AMS computer. The information contained in each message is decoded by the receiving system. During the integrated mode, the AMS up-data link interfaces with the MSCC computer complex in the same manner as the spacecraft does in an actual Apollo mission.

All up-data messages from the MSCC are processed by the 201A data transmission equipment, conditioned for input to the AMS, appropriately patched at the flight crew trainer (FCT) patchboard, and received at the

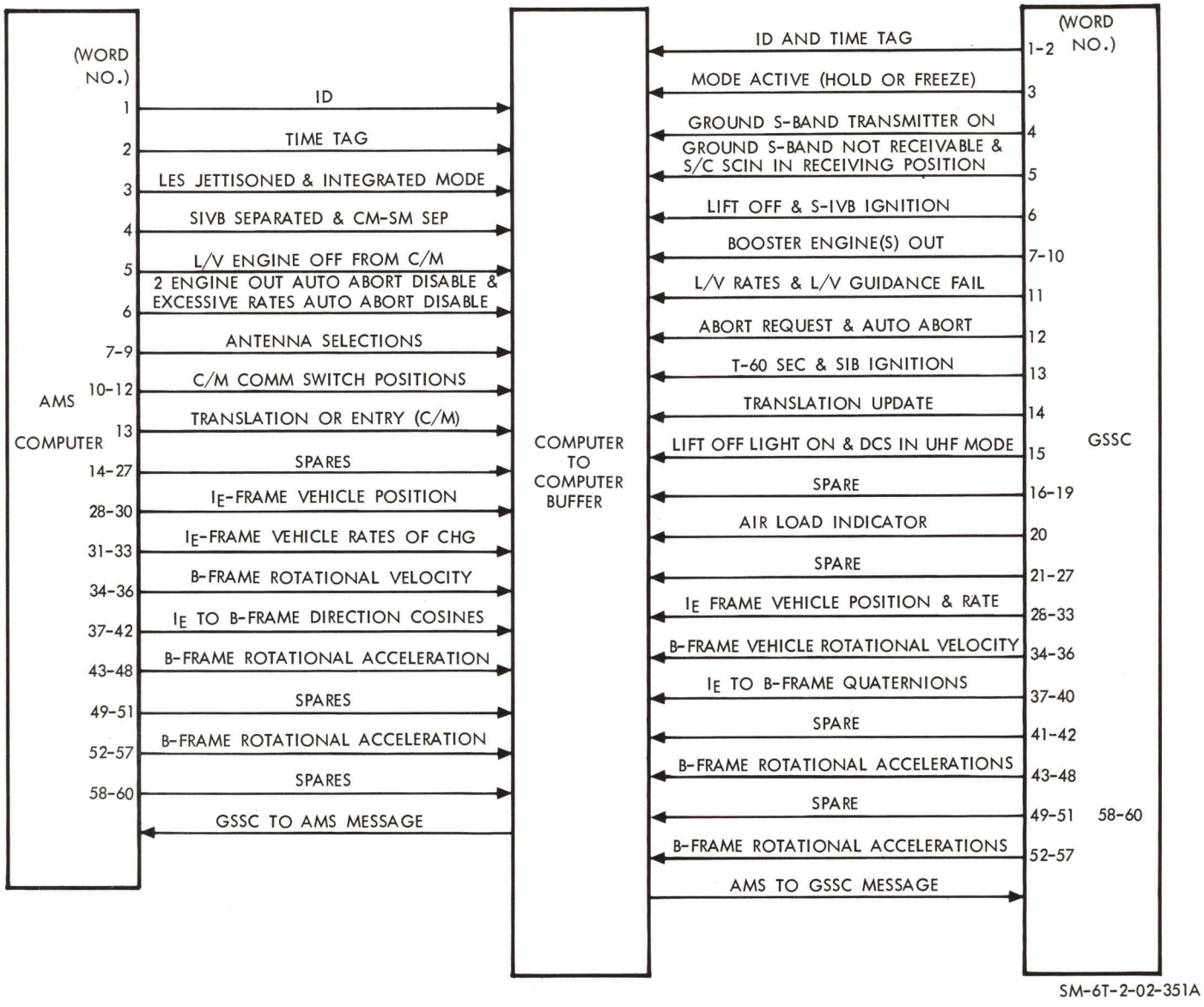

Figure 2-68. Trajectory Link Message

AMS J-box. Up-data messages are comprised of the message addressing, message data contents, and a simultaneous 1000-cps clock signal. The UDL decoder receives the up-data message, changes the intelligence from serial to parallel format, and decodes it from MSCC sub-bit format to AMS format.

During the integrated mode, the IOS may still insert malfunctions into the UDL decoder. A digital command system failure is generated by depressing the DCS FAIL pushbutton indicator on the UDL panel of the IOS. This will cause the decoder to be held in the RESET condition until the malfunction is removed. The instructor-operator may also insert the FAIL-NEXT MESSAGE signal as a malfunction during the integrated mode from the IOS. This will cause the decoder to be held in the reset condition until the malfunction is removed. The next message after insertion is faulted the NEXT MESSAGE FAILED light on the IOS illuminates. This situation will continue until either the required number of failures is attained, or a different message is received in the decoder; at which time, the fault generator is reset and the new word is handled normally. As a result of either of these two occurrences, a verification signal is sent to the PCM, and the MESSAGE RECEIVED indicator of the IOS UDL panel illuminates. The system is reset by closure of the KYBD CLEAR switch on the IOS.

2.14.3 PCM TELEMETRY SIMULATION.

The telemetry system simulation in the AMS makes use of a modified spacecraft telemetry package. The AMS computer supplies analog and digital data from other system simulations to this package. No special processing is required for these signals as they are already in the necessary format. The modified spacecraft telemetry package allows malfunctions to be inserted directly from the MIU to the T/M. Simulation parameters processed by the telemetry program are included in section 6 (Simulation Output Data) of Volume II of this handbook.

A block diagram of the telemetry simulation, along with the telemetry console, is shown in figure 2-69. The actual spacecraft PCM telemetry unit is used in the AMS. Only the inputs to the unit are simulated. These inputs are in the form of analog, bilevel (single digital bits), and digital words. Generated within the AMS computer are 320 analog signals, 224 bilevel signals, four parallel-digital words, and one parallel-digital word. They simulate inputs from all the various S/C systems and are shown on the system drawings throughout this section of the handbook. The information bit train from the PCM-T/M is available out of the AMS any time the T/M system is on. The output from the T/M system in the AMS is the same as that of the actual S/C system, that is, 51,200 bits per second (bps), or 1600 bps as determined by command module switch position. This pulse training may be sent directly out of the AMS or to the data storage equipment (DSE) where it will be recorded for later transmission.

All C/M switches which affect PCM-T/M operation will light repeater indicators on the IOS and T/M console. The various system programs generate the data signals required by the PCM-T/M for proper operation.

2.14.3.1 Analog Inputs to PCM.

Analog inputs to the PCM-T/M are of two types: dynamic and static. The dynamic analog inputs are supplied by the computer through digital-to-analog (D/A) converters and are 0 to +5-volt d-c signals representing specific measurements normally made aboard the S/C. These are the analog signals which MSFN will monitor under normal mission conditions.

Static analog signals are generated by tying the output lines in the AMS peripheral equipment to +2.5 volts dc. The static analog signals are those not normally monitored by MSFN in an actual mission. By tying these lines to +2.5 volts dc, continuous zero readings in the PCM output pulse train are avoided.

The 320 analog signals, static and dynamic, received by the T/M fault control unit may be faulted or allowed to pass unhindered to the PCM-T/M unit. Of these 320 signals, 50 are fed through attenuators which lower their voltage levels to a range of 0 to +50 millivolts dc from their original 0 to +5 volts dc. These signals then simulated the low-level analog inputs to the PCM-T/M.

2.14.3.2 Bilevel Inputs to PCM.

Bilevel inputs to the PCM-T/M are also of dynamic and static types. The static bilevel inputs are tied indiscriminately to 0 to +6 volts dc so that some intelligence will appear on each input line to the PCM-T/M. The dynamic bilevel signals are provided by the computer and represent simulated event occurrences within the S/C. The bilevel signals are routed through the digital bit output circuits to the T/M faulting circuit and then on to the PCM-T/M. In the T/M unit, the 224 bilevel input signals are sampled eight at a time, at specific intervals and treated as parallel-digital words. Each bilevel input may be faulted individually in the fault control unit.

2.14.3.3 Parallel-Digital Inputs to PCM.

Most parallel-digital words are provided to the computer through the digital word output circuits. These words will be in the form of multiples of eight parallel bits. Four parallel-digital words are fed into the PCM-T/M unit through the T/M fault control unit. Each of these words (two 16-bit, one 24-bit, and one 32-bit) may be faulted in its entirety by the fault control unit. One additional eight-parallel bit word is supplied to the T/M unit by the UDL. This is the UDL verify word, and no provisions are made to malfunction it directly.

2.14.3.4 Serial-Digital Input to PCM.

The 40-bit serial-digital word from the S/C G&N to the PCM is simulated by the computer in the AMS. This signal is presently fed directly from the AMS computer to the PCM-T/M unit. There the serial-digital word is converted to nonreturn-to-zero format and integrated into the output pulse train.

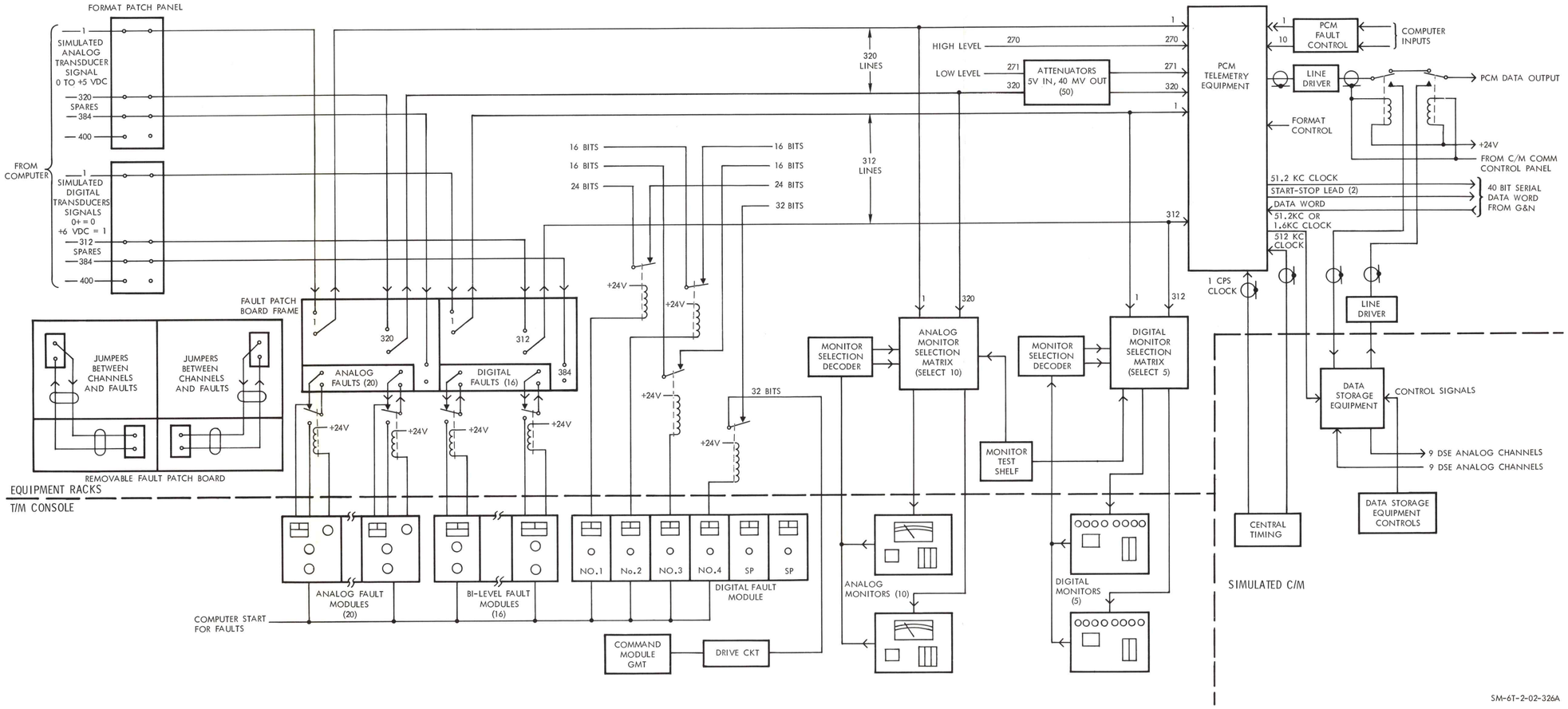

Figure 2-69. PCM Telemetry Simulation and T/M Console

2.14.3.5 Other Inputs to PCM.

Other inputs to the PCM-T/M include nondata clock signals from the AMS computer simulating the spacecraft CTE. The bit rate control signals from the simulated C/M communications control panel will be sent to the PCM-T/M and will also light repeater indicators on the T/M console and the IOS. This signal controls the bit rate output from the PCM-T/M. The C/M communications control panel also contains a switch to determine which astronaut biomedical information is sent to the T/M unit on a set of four lines. The analog telemetry switch determines which set of analog transducers will provide signals to the premodulation processor (PMP) for subcarrier modulation but has no connection with the PCM-T/M.

2.14.3.6 PCM-T/M Output.

The PCM-T/M output is a continuous serial nonreturn-to-zero (NRZ) pulse train of either 51,200 bps or 1600 bps. The pulse train is amplified and sent through a switching network to either SCATS or the data storage equipment (DSE) for recording. The DSE is a standard S/C-DSE. It receives the PCM pulse train from the T/M unit upon selection from the communications control panel. This pulse train is then recorded on four tracks of the tape to be played back and transmitted later to SCATS. Regardless of the bit rate sent into the DSE, the output rate from the DSE will be 51,200 bps due to varying tape speeds.

2.14.4 TELEMETRY FAULT SIMULATION.

Analog, bilevel, and parallel-digital words sent to the PCM by the computer are routed through the fault insertion networks in the T/M console, and associated equipment racks. Figure 2-69 contains a diagram of the T/M console which may be referred to during the following discussion.

2.14.4.1 Analog Fault Insertion.

The 320 zero to +5-volt d-c analog signals are fed from the format patch panel to the fault patchboard in the equipment rack. The fault patchboard is wired by a plug-in preprogramed patch panel. This panel directs the 320 analog signals and the 312 digital bits which make up the bilevel and parallel-digital words. Of the 320 analog signals available at the patch panel, a maximum of 20 may be directed to the analog fault modules. Four different types of malfunctions may be simulated in each fault module:

- A drift in the d-c level of the data signal. The drift rate is variable over the range of ±1 millivolt per second to ±1.0 volt per second.
- A fixed level substituted for the data signal.
- A voltage offset of the data through an algebraic addition of a set voltage.
- A complete analog channel loss.

Provisions are made within the module to ensure that the output data signal does not exceed the maximum or minimum established for analog signals. The data signals will be routed through the fault module and back to the patch panel without any change to the information contained until the malfunction is inserted by the computer program or by manual switch activation.

As the analog signals are sent from the fault patchboard to the PCM-T/M unit, a parallel pickoff is taken from each of the 320 lines and fed to the analog monitor selection matrix. Through the use of digiswitches, the T/M console operator may select 10 analog signals for display on the 10 voltmeter indicators. Monitoring of these signals will not interrupt their travel to the PCM-T/M unit.

2.14.4.2 Bilevel Fault Insertion.

The bilevel bits are produced by the AMS computer and are sent through the fault patchboard to the PCM-T/M unit. The fault patchboard is capable of patching 16 of the 224 bilevel signals to the bilevel fault modules. Normally closed relay contacts in each of the 16 fault modules provide series continuity for the digital event line until a fault is inserted, either automatically, by the computer, or manually from the T/M console. Insertion of a bilevel fault substitutes a continuous "1" or "0" on the data line to replace the normal signal level. The T/M console contains a five-position rotary switch for selecting COMP or MAN fault insertion and ON or OFF (+6 vdc or 0 vdc) fault levels for each of the 16 bilevel fault channels. Each control also has a NORMAL position. From the fault patchboard, all of the bilevel signals are sent to the monitor unit in the T/M console and to the PCM unit.

2.14.4.3 Parallel-Digital Word Faulting.

Four parallel-digital words are generated in the AMS computer and fed out through the fault patchboard. There are two 16-bit words, one 24-bit word, and one 32-bit word. These are all parallel bit words, so there are a total of 88 lines running from the AMS computer to the digital word malfunction units in the T/M console as part of the 312 digital bits patched out of the computer. All four parallel-digital words pass directly from the format patch panel to the T/M console where they are fed through four digital fault modules. Normally closed contacts of four multiple contact relays allow the digital words to pass through the module unaffected. When a fault is inserted, either manually or by computer command, into any of the four digital words the respective fault relay will energize causing all bits of the word to go to "0." Each fault module contains a three-part indicator to tell the T/M console operator when the fault has been inserted, and whether this was a manual or computer insertion. The paralled-digital words are routed from the fault modules to the PCM and T/M console monitor units. Operation of the monitor unit is explained in section 1, Volume II of this handbook.

2.15 AMS VOICE COMMUNICATIONS SUBSYSTEM.

Simulation of voice communications within the AMS is accomplished in several parts. Those systems which are in the actual S/C include S-band, VHF/AM, HF, and the intercom. In addition to simulating these, the AMS also incorporates backup and astronaut loops. These simulations are described in subsequent paragraphs and are also illustrated in figure 2-70.

Voice signals normally feeding the astronaut audio control center from S-band or VHF/AM are sent through distortion circuits as explained in paragraph 2.8.2. The incoming audio signal is fed to a voltage control amplifier (VCA) and on to the astronauts' earphones. This path will be the same, regardless of which audio signal is selected. Backup and astronaut loops are not selectable from within the command module, but will pass through the mixer and VCA.

The S/C intercom system is designed to provide communications between the astronauts within the C/M and between the astronauts and ground prior to lift off. In the AMS, the astronaut intercom system performs the same function by linking the simulated C/M with MSCC prior to simulated lift off during integrated mode simulation. At simulated lift off, intercom communications between the ground and the astronauts will be broken. The intercom in the AMS is the same as that in the actual S/C, except that an output is taken from each astronaut's earphones and fed to the monitor loop at the IOS. Earphones for the monitor loop allow the instructor-operator at the console to hear what the astronaut hears. The monitor loop is equipped with a four-position switch which allows the console operator to select astronaut intercom line 1, 2, 3, or all. All voice signals entering the audio centers from the up-link receivers are treated in the same manner as the intercom voice signals. The astronaut loops are not part of the Apollo communications systems but are supplementary links. These loops provide the IOS instructor-operator additional audio communications capability with the flight crew during the nonintegrated mode. Consisting of three independent audio links, the astronaut loops can provide astronaut communications at all times, even though simulated mission conditions may inhibit all other audio modes. Each astronaut may control his earphone volume through his audio center. The C/M power switch must be in the PTT or VOX position in order for the astronaut to transmit to the IOS. The astronaut loops are distributed by the console communications system (CCS) which is GFE.

The backup loop is also a supplementary loop and is completely independent of the CCS. This loop will provide astronaut communications if the CCS is inoperative. The backup loop allows the IOS systems management instructor-operator to monitor each astronaut earphone. To use the backup loop, the instructor-operator must plug his headset into a telephone jack on the IOS. The IOS has a volume control specifically for the backup loop as this signal is not under the control of the CCS volume control.

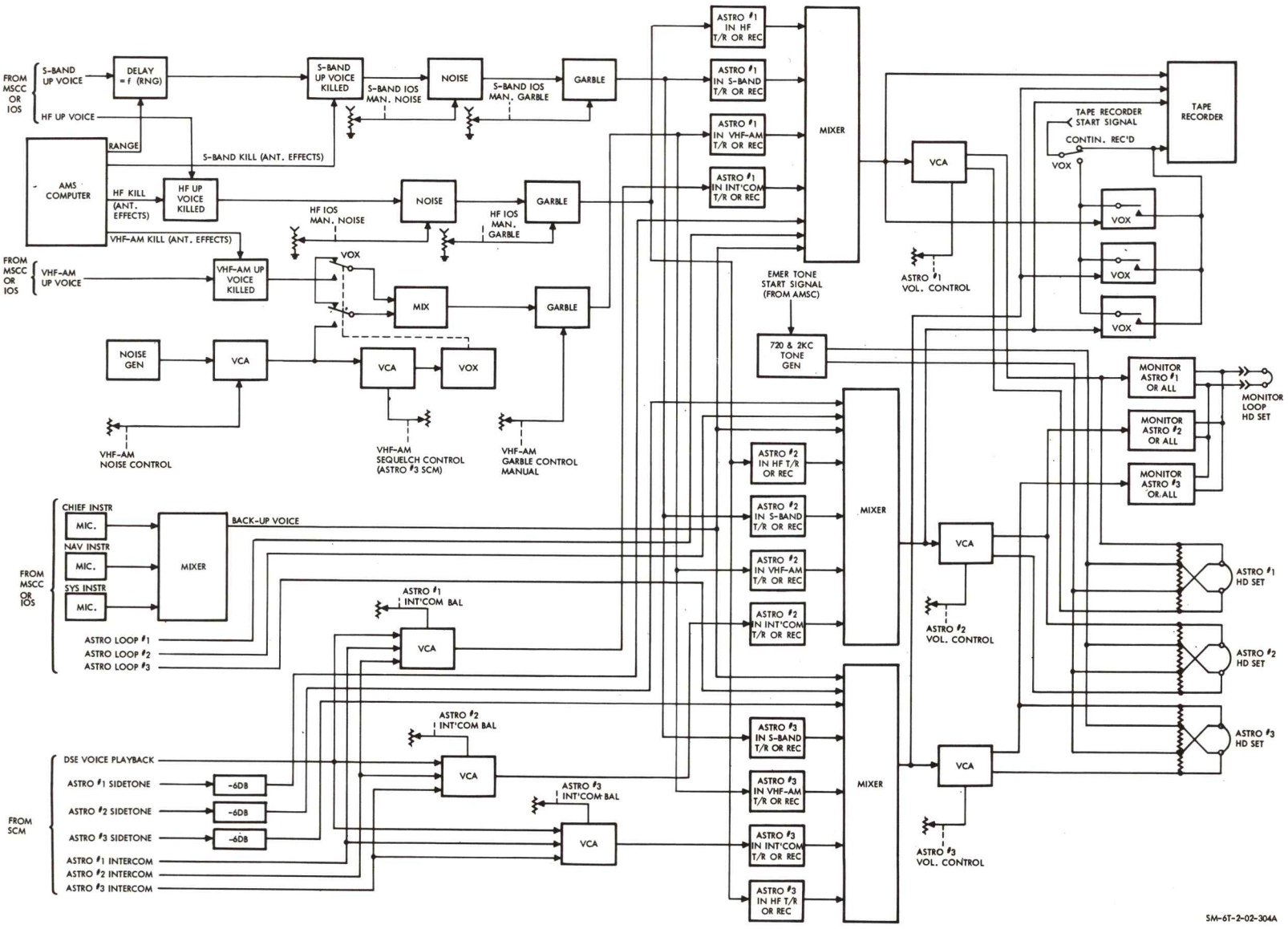

Figure 2-70. AMS Voice and Receiver Simulation

Emergency tone signals are fed into the astronaut's headset from the emergency tone generator. Any malfunction inserted into the AMS will cause the AMS computer to generate a start signal to this generator. The stop signal must be initiated by the astronaut.

SECTION 3

AMS UTILIZATION

3.1 PURPOSE AND SCOPE.

It is the purpose of this section of the handbook to provide a complete plan for use of the Apollo Mission Simulator (AMS) in the accomplishment of flight crew training for Mission 204A. The overall plan is in the form of a training syllabus made up of a number of training sessions. The syllabus includes a recommended sequence of presentation for the sessions. The contents and sequence of the training sessions are predicated on good developmental training practices; that is, from the easy to the difficult and from the simple to the complex.

The contents of this section are comprised of the following items:

- Detailed definition of a nominal training mission to be used as data base for training the flight crew for Mission 204A on the AMS.
- A general description of the training syllabus and the types of training of which it is comprised.
- A brief description of each training session in the syllabus.
- Identification of Handbook SM2A-03 crew procedures to be practiced in accomplishing the syllabus and an outline of crew procedures (from SM2A-03) for accomplishing the nominal training mission.
- A general description of how the AMS instructor handbook contents are used to prepare instructor scripts, including a brief discussion of the contents of Volume II of the handbook.

3.2 NOMINAL TRAINING MISSION.

This paragraph of the instructor handbook defines the nominal training mission for the AMS as updated by the SE 012 modification. The purpose of the mission is to provide a data base with which to plan and accomplish flight crew training for Mission 204A with the AMS. The mission characteristics and events are dictated by the planned 204A mission and constrained by the simulation capabilities of the AMS.

Table 3-1 is provided to define the relationships between the nominal training mission and Apollo Mission 204A as described in the 15 October 1965 preliminary Apollo Operations Handbook (SM2A-03). The first column lists the Mission 204A events in mission sequence. The second column identifies the corresponding events in the nominal training mission. The nominal training mission events are not necessarily in mission sequence. Sequence of nominal training mission events and related crew activities are the subject of figure 3-1.

Further definition of nominal training mission chronology, events, and crew activities are provided in table 3-8 and figures 3-37, 3-38, and 3-39. The third column of table 3-1 contains remarks on the relationship between operational mission and nominal training mission events.

The nominal training mission is comprised of four different mission plans accomplished on the dynamic profile of one basic three-orbit mission. The basic three-orbit profile consists of a launch-boost to a 105-n mi circular orbit, three orbits, and G&N mode retrograde and entry to an area off the Hawaiian Islands. The three-orbit mission has been selected as the optimum training mission duration for two reasons. The first is that the most complex of mission procedures (Hohmann transfer from 105-n mi orbit to 130-n mi and back to 105-n mi orbit) can be accomplished within the three-orbit constraint. The second reason for limiting the training mission to three orbits is that anything longer than the four and three-quarter hour, three-orbit mission would be both unnecessary and inconvenient.

The phases and mission events comprising the nominal training mission are shown in figure 3-1. The four variations in mission plan are:

- Basic mission - launch boost, three orbits, retrograde, and entry
- Plane changes - launch boost, -1 degree plane change, +1 degree plane change, retrograde, and entry
- Hohmann transfers - launch boost to 105-n mi orbit, Hohmann transfer to 130-n mi orbit, circularize at 130-n mi, Hohmann transfer to 105-n mi orbit, circularize at 105-n mi, retrograde, and entry
- Transposition and docking - launch boost, jettison S-IVB, transpose spacecraft and dock (5 feet from contact-AMS constraint), retrograde, and entry.

Table 3-1. Mission Events, 204A Versus Nominal Mission

Mission 204A Outline (Ref. SM2A-03)	Nominal Training Mission Events (Ref. Figure 3-1)	Remarks
1. S-1B launch 2. S-1B shutdown and staging 3. S-IVB/J2 ignition 4. LES/BPC jettison	1. Launch Boost Launch site - KSC azimuth - 72° Thrust duration - 10:02 Launch date - 10/1/66	AMS launch simulation is by NASA-provided computer tape.
5. Acquisition of 105-n mi orbit	2. Orbit Insertion Altitude - 105 n mi Inclination - 31.69° Orbit duration - 88 min/orbit	Step 3 is per table 3-8 of this volume and is not required to explain mission.
6. Separations SLA deploy CSM transposition and S-IVB viewing	4. S-IVB Jettison 5.3 Transposition and Docking	Docking closure simulation in the AMS is to a minimum distance of 5 feet between the CSM and S-IVB.
7. First delta V (2° plane change)	5. Delta V Plane change -1° to 30.69° inclination	
8. Second delta V (Hohmann transfer from 105 to 130 n mi)	5. Delta V Initiate Hohmann transfer from 105 to 130 n mi	Mission 204A involves a nonoptimum transfer. Nominal training mission uses optimum (180°) transfer. Variations in the nominal mission for purposes of simulating nonoptimum transfer are the subject of paragraph 3.2.6.5.
9. Third delta V (circular-ignition at 130 n mi)	7. Delta V Circularization at 130 n mi	
10. Fourth delta V (1° plane change)	8. Delta V Plane change of $+1^{o}$ to 31.69^{o} inclination	
11. Fifth delta V (.8° plane change)		
12. Sixth delta V (change to 85/125-n mi elliptical orbit)	8. Delta V Initiate Hohmann transfer from 130 to 105 n mi	Mission 204A (as defined in MSC Note 65-FM-58) involves retrograde from 105/124-n mi elliptical orbit. Nominal training mission uses retro from 105-n mi circular orbit. Variations in the nominal mission for purposes of practicing entry from elliptical orbit (105/130 n mi) are the subject of paragraph 3.2.6.2.
13. Seventh delta V (reduce apogee of elliptical orbit)	10. Delta V Circularize at 105 n mi	See remarks for preceding item.
14. Eighth delta V (retro from 85 n mi)	11. Delta V Retro from 105 n mi circular orbit	See remarks for item 12/8 on final orbit, retro, and entry.
15. C/M-S/M separation	12. C/M-S/M Separation	
16. C/M entry at 400,000 ft	13. .05 G (Start Entry)	
17. Apex cover jettison		
18. Splash	14. Touchdown	

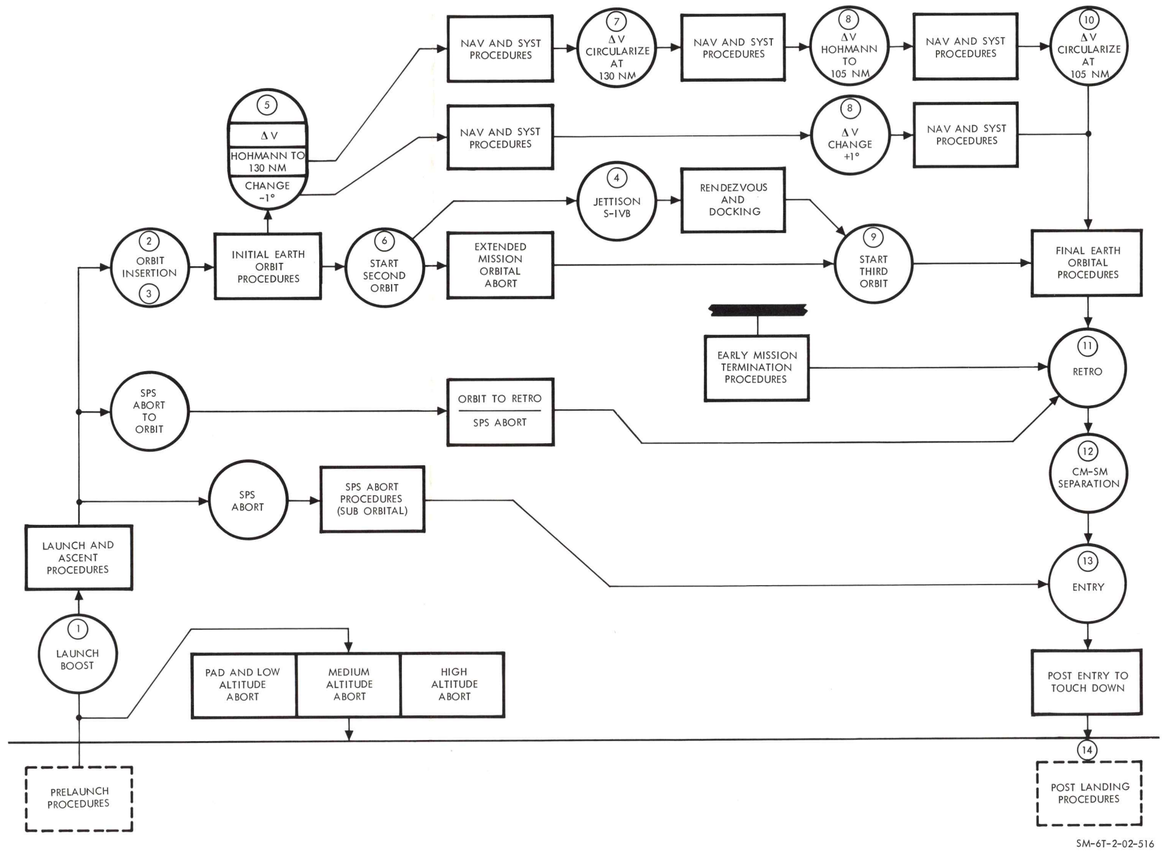

Figure 3-1. Nominal Training Mission Block Diagram

3.2.1 NOMINAL MISSION REFERENCE DATA.

As has been previously explained, the nominal training mission is comprised of a basic dynamic mission on which four different mission plans have been imposed. It is the purpose of the following paragraphs to explain the basic dynamic mission.

3.2.1.1 Launch-Boost.

The launch-boost simulation in the AMS integrated mode is by direct input from the computer complex of the Manned Spaceflight Control Center (MSCC). In the nonintegrated mode, the input from the MSCC is synthesized by reading a prepared computer program (on tape) into the same AMS channels that are used for launch-boost input in the integrated mode.

Only one tape is provided with the SE 012 modification of the AMS. The tape is representative of the launch-boost profile of Mission 204A as defined at the time the tape was prepared. Figure 3-2 illustrates the surface range, velocity, and altitude characteristics of the simulated launch-boost with respect to time. Figure 3-3 illustrates the geographic trace of the simulated launch-boost. The numerical notes along the trace denote seconds after lift-off. The two figures are provided for general information. They should be useful in instructor-operator simulation of the MSFN during nonintegrated mode operation.

The launch-boost sequence of events is quite general in figures 3-2 and 3-3. More specific event versus time definition is as follows:

Inboard engine cutoff	0:02:20
Outboard engine cutoff	0:02:26
1st stage separation	0:02:28
2nd stage ignition	0:02:28
Jettison LET	0:02:48
S-IVB cutoff	0:10:02

3.2.1.2 Suborbital Aborts.

As explained in paragraph 3.2.1.1, the simulated launch-boost program in the AMS is preprogramed to a fixed profile representative of the Mission 204A launch and ascent. This situation is prohibitive to dynamic simulation of ascents involving engine out, excessive rates, or low thrust/acceleration launch situations. However, this limitation does not preclude initiation and simulation of all types of suborbital aborts. Once abort initiation takes place, the preprepared launch-boost program is terminated and a full dynamic simulation of the abort is provided.

Simulated aborts can be accomplished by either crew or instructor-operator inputs. The crew initiation is accomplished in the same way as in the spacecraft; that is, by twisting the translational hand controller counterclockwise. Instructor simulation of auto-abort is accomplished through the malfunction insertion unit of the IOS. It is desirable, but not necessary, to program some indication of booster failure to occur immediately prior to the

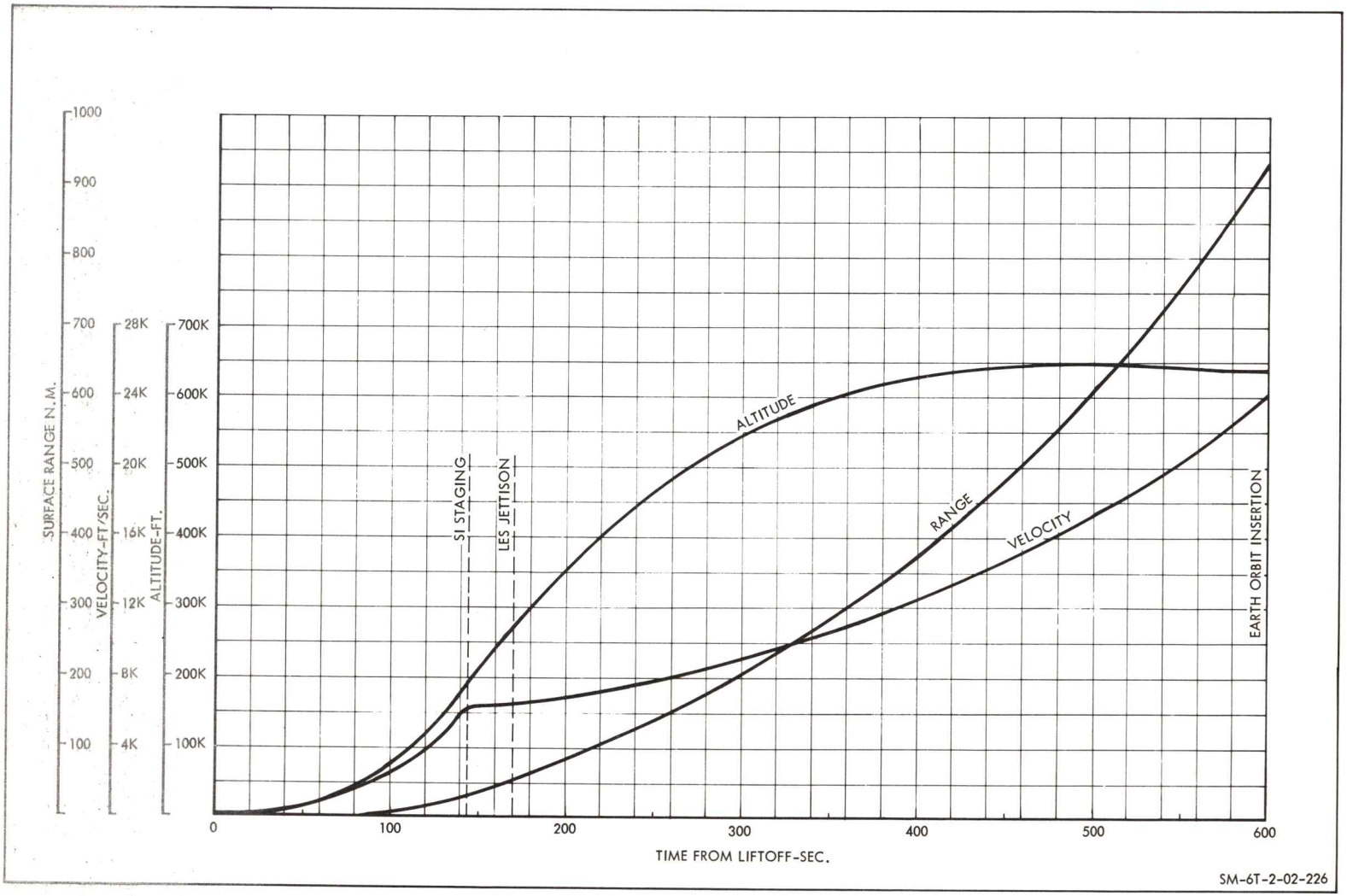

Figure 3-2. Launch/Ascent Data

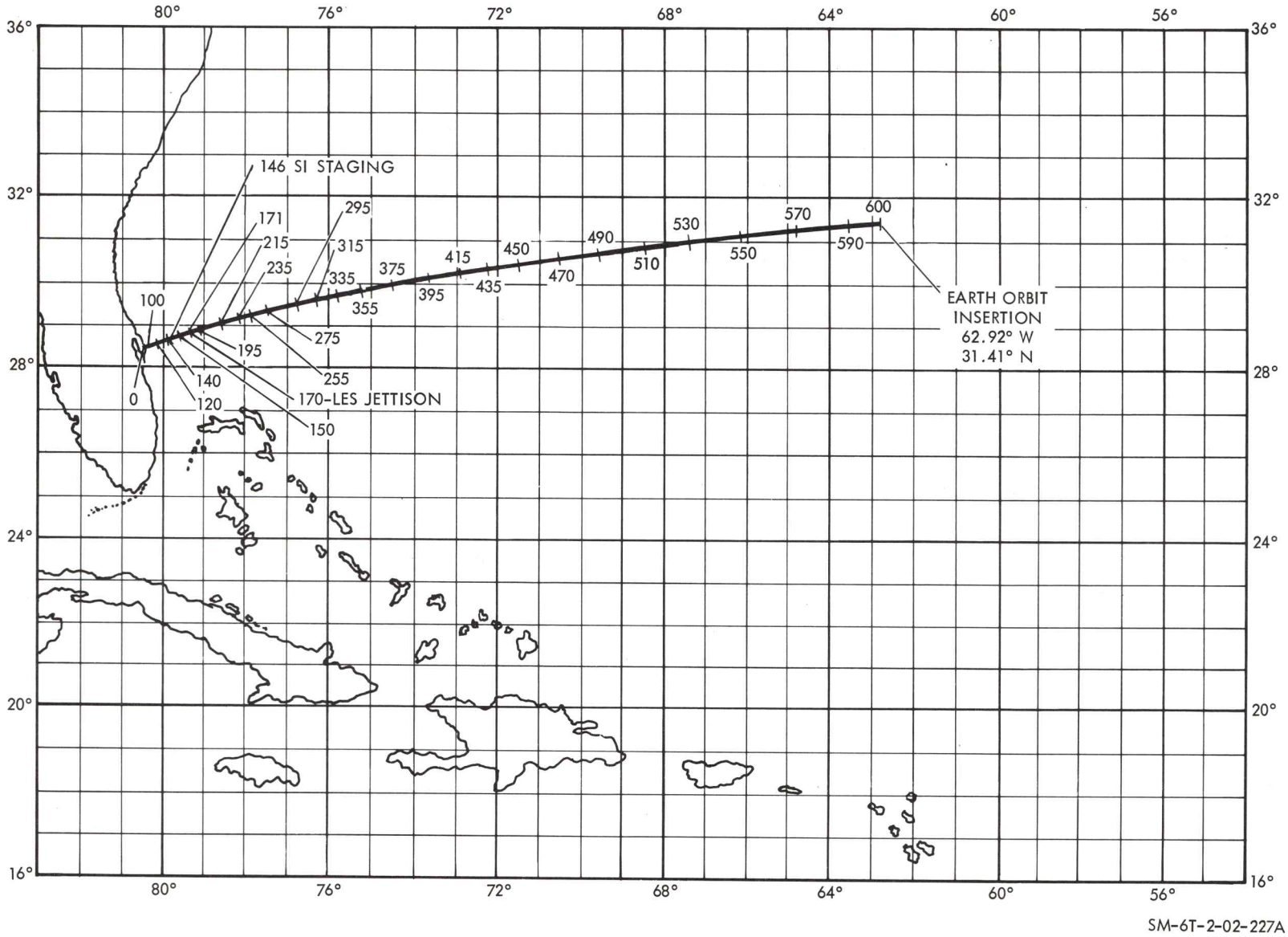

Figure 3-3. Launch/Ascent Path

auto-abort. However, time lapse from malfunction occurrence to abort initiation must be very short, as the effects that booster failure would have on FDAI and AGC indicators will not materialize in the preprogramed launch boost simulation. The MIU is also the means by which the ABORT REQUEST light in the simulator command module is illuminated. Instructions for instructor-operator use of the MIU in abort simulation are provided in section 1, Volume II of this handbook.

Seven different abort sequences are simulated in the AMS. All are depicted in illustrated flow diagrams. The different abort sequences and the figures in which they are illustrated are as follows:

- LES abort pad and low altitude (pad to 42 seconds -0 to 10,000 feet)
- LES abort, low altitude (42 seconds to 24,000 feet)
- LES abort, medium altitude (24,000 to 120,000 feet)
- LES abort, high altitude (120,000 feet to tower jettison)
- SPS abort, suborbital, retrograde for Atlantic Range recovery
- SPS abort, suborbital, posigrade for Indian Ocean recovery
- SPS posigrade to orbit, for mission continuation (as affected by SPS fuel constraints).

Details of the spacecraft abort sequences are provided in the Apollo Operations Handbook (SM2A-03). A description of the sequential events control system simulation in the AMS is included as paragraph 2.7 in this volume of the instructor handbook.

3.2.1.3 Orbital Navigation.

Navigation while in simulated orbit is accomplished with the visual displays system (described in paragraph 2.5) and the simulated G&N system (described in paragraph 2.6). Simulated launch time is 14:00:00 (GMT) on October 1, 1966. Orbital injection is at 62.92 degrees west and 31.41 degrees north. The launch-boost results in a circular orbit at an altitude of 105 n mi with an orbital inclination of 31.69 degrees and an orbital duration of 88 minutes per orbit. Orbital ground trace, day/night illumination, and landmark and star views available for navigation are all direct products of these primary mission characteristics.

Orbital navigation in the AMS is accomplished by the landmark tracking method; that is, the crewmember views the MEP film through the telescope, aligns on selected landmarks, and initiates a MARK input to the simulated Apollo Guidance Computer (AGC). This is the primary method of orbital navigation for Mission 204A. A secondary method of orbital navigation that can be performed in the AMS and is to be used in Mission 204A is the star-lunar landmark method. The star refraction method of navigation cannot be practiced in the AMS because the optical distortion characteristics of the earth atmosphere are not simulated.

Table 3-2 lists the earth landmarks that are simulated for navigational purposes in the AMS visual system. Table 3-3 lists the lunar landmarks, and table 3-4 lists the navigational stars. Figure 3-4 through 3-19 graphically describe the ground trace for the 16 orbits simulated in the AMS. The centerline of the trace illustrates the nadir of the orbit on the earth surface. The time notes along the bottom are mission time from launch. The narrow line bordering the ground trace indicates night phase and the wide double line shows the approximate edges of the MEP film. The small numbered circles in the figures identify the landmarks available for navigation purposes during each orbit. The numbers identify each landmark in table 3-2. The large circles identify those MSFN stations simulated in the nonintegrated mode of AMS operation. The radius of each circle deplicts the effective range of the simulated station. The simulated MSFN stations are listed in table 3-5.

Navigational stars are shown with respect to the earth surface, the moon, and the ground trace for each of the 16 orbits by means of the blue overlay on figures 3-4 through 3-19. The stars shown are those listed in table 3-4. Examination of figures 3-4 through 3-19 will reveal that the 16 orbits shown do not produce daylight illumination of Australia and Central South America. Night phase (darkness) restrictions and landmark use are even greater in the three-orbit nominal mission. Since the 16-orbit visual system can continue orbital simulation to a virtual infinity by reiteration, it is possible to achieve daylight illumination of all landmarks as a function of simulated elapsed time. However, it is also both possible and desirable to disable the day terminator function of the AMS and thereby provide continuous daylight illumination of the MEP film strip. The nominal training mission makes extensive use of the latter method to facilitate landmark navigation.

Table 3-2. Terrestrial Landmarks

L/M No.	Landmark	Latitude	Longitude	WAC Map	Area/ Country	Call Up
1	Cape Receife south of Port Elizabeth in Algoa Bay	S 34° 02'	E 25° 42'	1421	South Africa	001
2	Cape St. Francis southwest of Port Elizabeth in St. Francis Bay	S 34° 12'	E 24° 50'	1421	South Africa	002
3	Cape Agulhos southmost tip of South Africa	S 34° 50'	E 20° 01'	1422	South Africa	003
4	Cape of Good Hope	S 34° 21'	E 18° 29'	1422	South Africa	004
5	Northernmost tip of coast in St. Helena Bay at town called Stompneusbaai	S 32° 42'	E 17° 58'	1422	South Africa	005
6	Tip of southern bank at mouth of Orange River	S 28° 38'	E 16° 27'	1396	South Africa	006
7	Northern tip of peninsula at City of Durban	S 29° 52'	E 31° 03'	1398	South Africa	007
8	Southern tip of peninsula at town of Richards Bay	S 28° 48'	E 32° 05'	1398	South Africa	008
9	Westernmost peninsula located in Luderitz Bay	S 26° 38'	E 15° 05'	1302	Southwest Africa	009
10	Pelican Point in Walvin Bay	S 22° 53'	E 14° 26'	1273	Southwest Africa	010
11	Western tip of Kilwa Island located in Lake Mweru	S 09° 15'	E 28° 29'	1055	Southwest Africa	012
12	Southern tip of island called Nosey Mangabe in northern part of bay called Baie Antongil	S 15° 31'	E 49° 46'	1156	Southwest Africa	013
13	Southern tip of island called Ill Saint-Marie at town of Talavia	S 17° 07'	E 49° 49'	1173	Southwest Africa	014
14	Pointe Fenambosy location on spit of land enclosing Bay called Baie De Fenembasy	S 25° 15'	E 44° 21'	1297	Southwest Africa	015
15	Northern tip of peninsula called Cape Lopez located in bay called Baie Du Cap Lopez	S 00° 37'	E 08° 43'	936	French Colonial Territory	016
16	Extreme tip of sand bar beyond city of Mayoumba	S 03° 23'	E 10° 40'	936	French Colonial Territory	017
17	Northern tip of shoreline in estuary called Estuaire Du Gabon	N 00° 21'	E 09° 21'	905	French Colonial Territory	018
18	Tip of peninsula in harbor of Pointe Noire	S 04° 46'	E 11° 49'	1027	French Congo	019
19	Westernmost tip of peninsula about three statute miles northwest of Dakar	N 14° 44'	W 17° 32'	697	French West Africa	020
20	Southeastern tip of island of Anjouan	S 12° 22'	E 44° 30'	1155	French West Africa	021
21	Northern tip of peninsula in Lake Tanganyika about two statute miles north of town Manga	N 04° 03'	E 29° 14'	1030	French West Africa	026
22	Southern tip of peninsula called Cap Blanc	N 20° 46'	W 17° 03'	575	Mauritania	028
23	Fuawi Point on west coast of Lake Nyasa	S 12° 56'	E 34° 19'	1154	Rhodesia and Myasaland	029
24	Western tip of Boadzula Island in southern port of Lake Nyasa	S 14° 16'	E 35° 08'	1154	Rhodesia and Myasaland	030
25	Western tip of Sherbro Island at town of Kambia	N 07° 34'	W 12° 57'	818	Sierra Leone	032
26	Northwesternmost tip of coastline about three statute miles west of Freetown	N 08° 30'	W 13° 17'	780	Sierra Leone	033
27	Northernmost shoreline of largest island in middle of Lake Zuai	N 07° 57'	E 38° 52'	810	British Cameroons	035

Table 3-2. Terrestrial Landmarks (Cont)

L/M No.	Landmark	Latitude	Longitude	WAC Map	Area/ Country	Call Up
28	Any point on shoreline of island called Daga in lake called T'Ana	N 11° 53'	E 37° 18'	789	British Cameroons	037
29	Some point at city of Bathurst	N 13° 27'	W 16° 35'	697	Gambia	038
30	Southern tip of westernmost island in group of islands called Iles De Los six statute miles west of Conakry	N 09° 27'	W 13° 50'	780	Guinea	039
31	Southern tip of sand bar called Ponta Da Macaneta	S 25° 52'	E 32° 45'	1299	Guinea	040
32	Southern tip of peninsula jutting into bay called Baia De Inhambane	S 23° 44'	E 35° 25'	1276	Guinea	041
33	Northern tip of island called Ilha De Bazaruta	S 21° 31'	E 35° 29'	1276	Guinea	042
34	Shoreline at mouth of river Rio Pungue near town of Beira	S 19° 51'	E 34° 50'	1176	Guinea	043
35	Highest point (9760 ft) on island of Fogo	N 14° 57'	W 24° 21'	699	Cape Verde Island	044
36	Northern tip of large spit of land called Punta Da Marca	S 16° 31'	E 11° 42'	1179	Cape Verde Island	045
37	Tip of sand bar in Harbor of Luanda	S 08° 45'	E 13° 16'	1057	Cape Verde Island	046
38	Northern tip of peninsula jutting into mouth of Congo River, town of Santa Antonia Da Zaire	S 06° 04'	E 12° 20'	1027	Cape Verde Island	047
39	Either southern tip of peninsula across Rusinga Channel at mouth of Kavirondo Gulf or northern tip of Rusinga Island	S 00° 24'	E 34° 17'	932	Kenya	049
40	Northern tip of South Island which is located in Lake Rudolf	N 02° 38'	E 36° 37'	910	Kenya	050
41	Northernmost shoreline of North Island in Lake Rudolf	N 04° 05'	E 36° 02'	810	Kenya	051
42	Cape Rhir on coast of Morocco	N 30° 37'	W 09° 54'	454	Morocco	052
43	Western tip of Goba Island in Lake Tanganyika	S 06° 28'	E 29° 50'	1030	Zanzibar and Tanganyika	053
44	Eastern tip of Akerewe Island opposite town of Rugenzi Ukerewe Island located in Lake Victoria	S 02° 06'	E 33° 12'	932	Zanzibar and Tanganyika	054
45	Northern tip of Mafia Island about 7.5 statute miles north of town Kanga	S 07° 38'	E 39° 55'	1031	Zanzibar and Tanganyika	055
46	Northern tip of Zanzibar Island at town of Mwanda	S 05° 44'	E 39° 18'	1031	Zanzibar and Tanganyika	056
47	Northern tip of Pemba Island about 3.5 statute miles north of town of Miperan	S 04° 53'	E 39° 41'	1031	Zanzilar and Tanganyika	057
48	Southernmost tip of island of La Palma at point called Punta De La Fuencaliente	N 28° 27'	W 17° 50'	455	Canary Islands (Spain)	058
49	Westernmost tip of island of Tenerife about 2.5 statute miles west of the town called Buenavista	N 28° 20'	W 16° 55'	455	Canary Islands	059
50	Easternmost tip of island of Tenerife about 2 statute miles north of town Igueste	N 28° 35'	W 16° 07'	455	Canary Islands	060

Table 3-2. Terrestrial Landmarks (Cont)

L/M No.	Landmark	Latitude	Longitude	WAC Map	Area/ Country	Call Up
51	Northernmost tip of island of Gran Canaria at port of city of Las Palmas	N 28° 11'	W 15° 24'	455	Canary Islands	061
52	Southernmost tip of island called Isle De Fuerteventura at point called Punta De Jandia	N 28° 04'	W 14° 30'	455	Canary Islands	062
53	Southern tip of peninsula called Peninsula De Yala at point called Punta Durnford	N 23° 40'	W 16° 02'	575	Spanish Sahara	063
54	Northwestern tip of compound spit at point called Punta Carducci. The spit is called Penisoha Di Hafun	N 10° 33'	E 51° 10'	791	Somali Republic	064
55	Cabo De Vela on peninsula called De Guajura in northern Columbia	N 12° 13'	W 72° 10'	707	Columbia	065
56	Southwestern tip of island called Isle De Baru. It is one of group of islands called Islas De El Rosario	N 10° 08'	W 75° 42'	770	Columbia	066
57	Cape called Cabo Corrientes located in Gulf of Panama	N 05° 29'	W 77° 33'	829	Columbia	067
58	Southern tip of cape called Cabo Marzo located in Gulf of Panama	N 06° 51'	W 77° 42'	829	Columbia	068
59	Cape called Cabo Cadera east of city of Caracas	N 10° 35'	W 66° 03'	771	Venezuela	075
60	Eastern tip of island called Enterprise (Leguan) at mouth of Essequibo River	N 06° 57'	W 58° 20'	826	Venezuela	077
61	Town opposite airport called Los Perales at entrance to bay called Bahia De Caraquez	S 00° 36'	W 80° 25'	951	Ecuador	080
62	Tip of coast called Ponta Da Baleia northeast of town Armacao	S 17° 42'	W 39° 08'	1189	Brazil	081
63	Southeastern tip of Ilha De Sao Sabastiaa	S 23° 58'	W 45° 15'	1262	Brazil	082
64	Small island called Cabo Frio east of large sand bar about 80 statute miles due east of Rio De Janeiro	S 23° 00'	W 41° 59'	1263	Brazil	083
65	Point of land on sourthern bank of mouth of Paraiba River at town of Atafona	S 21° 37'	W 41° 01'	1263	Brazil	084
66	Point of land at mouth of river near town of Espirito Santo De Vitoria	S 20° 19'	W 40° 16'	1263	Brazil	085
67	Mouth of canal De Sao Goncato east of city of Pelotas	S 31° 47'	W 52° 14'	1384	Brazil	086
68	Either Santa Rita Airport (runway 6500 ft) or tip of peninsula at town of Gabedelo	S 06° 58'	W 34° 50'	1018	Brazil	088
69	Ponta Manguinho located at mouth of San Francisco River	S 10° 31'	W 36° 24'	1066	Brazil	090
70	Southern tip of Salvador City located in bay called Bahia De Todos Os Santos	S 13° 01'	W 38° 33'	1141	Brazil	091
71	Pinto Martins Airport (runway 6900 ft) or tip of Ponta Da Muciripe near Fortaleza on northeastern coast of Brazil	S 03° 42'	W 38° 28'	944	Brazil	095
72	Punta Das Desertes located in northern section of lake Dos Patos	S 30° 26'	W 50° 54'	1384	Brazil	096

Table 3-2. Terrestrial Landmarks (Cont)

L/M No.	Landmark	Latitude	Longitude	WAC Map	Area/ Country	Call Up
73	Western edge of sand bar where railroad bridge crosses lagoon called Lagoa Imarui	S 28° 26''	W 48° 50'	1384	Brazil	097
74	Southern tip of sand bar eastern side of lagoon called Lagoa Dos Patos. Landmark located south of the town Pontal Da Barra at breakwater	S 32° 09'	W 52° 04'	1433	Brazil	098
75	Tip of coastline jutting into bay Bahia De Sechuro called Punta Aguja	S 05° 47'	W 81° 04'	1011	Peru	099
76	Tip of coast called Punta Parinas near town of Negritos located south of large oil field	S 04° 40'	W 81° 20'	1011	Peru	100
77	Punta Lachay near town of Las Salinas	S 11° 18'	W 77° 39'	1073	Peru	101
78	Southern tip of peninsula in bay Bahia De Samanco	S 09° 14'	W 78° 34'	1073	Peru	103
79	Tip of peninsula jutting out from city of Lima off island of San Lorengo	S 12° 04'	W 77° 10'	1135	Peru	104
80	Island called Isla San Gallan west of peninsula Paracas	S 13° 50'	W 76° 27'	1135	Peru	105
81	Punta Parada located on south shore of San Juan Bay	S 15° 22'	W 75° 12'	1135	Peru	106
82	Punta Tinaja located on coast near Pan American Highway	S 16° 15'	W 73° 43'	1194	Peru	107
83	Punta Coles near Ilo Airport and south of town Ilo	S 17° 43'	W 71° 23'	1194	Peru	108
84	Isla De Panza in lake called Lago De Poopo northwestern tip of island	S 18° 43'	W 67° 12'	1195	Bolivia	109
85	Northern tip of peninsula in lake Titicaca opposite island called Isla De Titicaca	S 16° 03'	W 69° 08'	1194	Bolivia	110
86	Southern tip Punta Del Este south of San Carlos about 85 statute miles due east of Montevideo	S 34° 58'	W 54° 57'	1433	Uruguay	111
87	Southern tip of peninsula jutting out from San Diego Harbor	N 32° 39'	W 117° 14'	404	United States	113
88	Northern tip of Santa Catalina Island	N 33° 28'	W 118° 36'	404	United States	114
89	Where runways meet with tip of peninsula south of Port Royal off coast of South Carolina	N 32° 18'	W 80° 40'	409	United States	116
90	Tip of offshore sand bar called Cape Lookout off coast of North Carolina	N 34° 35'	W 76° 32'	410	United States	117
91	Southern tip of Cape Fear, a cuspate delta in mouth of Cape Fear river near Wilmington, North Carolina	N 33° 51'	W 77° 58'	410	United States	118
92	Airport (Schales Field) on Galveston Island in Gulf of Mexico off coast of Texas	N 29° 16'	W 94° 51'	468	United States	119
93	Tip of point jutting into bay near Corpus Christi, Texas	N 27° 41'	W 97° 14:5'	522	United States	125
94	Westernmost tip of Key West Island	N 24° 32. 5'	W 81° 48'	525	United States	127
95	Southern tip of break in offshore bar at Biscayne Bay off east coast of Florida	N 25° 40'	W 80° 09'	525	United States	128
96	Tip of Cabo Haro (south tip) near Guaymas in Gulf of California	N 27° 50'	W 110° 53'	520	Mexico	130

Table 3-2. Terrestrial Landmarks (Cont)

L/M No.	Landmark	Latitude	Longitude	WAC Map	Area/ Country	Call Up
97	Tip of Punta Falsa off Lower California in North Pacific Ocean	N 27° 51'	W 115° 05'	519	Mexico	131
98	Tip of Punta Abreojos off Lower California in North Pacific Ocean	N 26° 43'	W 113° 37'	520	Mexico	132
99	Punta Tosca, southern tip of Isle Magdalena off Lower California in North Pacific Ocean	N 24° 19'	W 111° 42'	520	Mexico	133
100	Tip of peninsula in Bahia De La Paz near La Paz	N 24° 11'	W 110° 19:5'	520	Mexico	134
101	Tip of Cabo San Lucas at head of Lower California	N 22° 52'	W 109° 54'	591	Mexico	136
102	Southern tip of Mazatlan on West Coast of Mexico	N 23° 11'	W 106° 25'	590	Mexico	137
103	Lighthouse at Cabo Corrientes on western coast of Mexico	N 20° 25'	W 105° 42.5'	590	Mexico	138
104	Mouth of Rio Panuoo near Tampico on eastern coast of Mexico	N 22° 16'	W 97° 48'	589	Mexico	139
105	Point of land jutting into Pacific Ocean called Cabo Santa Elena	N 10° 54'	W 85° 58'	768	Costa Rica	144
106	Peninsula off western coast of Costa Rica at point called Cabo Blanco, flashing light 2 miles offshore	N 09° 34'	W 85° 07'	768	Costa Rica	145
107	Tip of peninsula in bay called Bahia Charco Azul point at peninsula called Punta Burica	N 08° 02'	W 82° 52'	768	Costa Rica	146
108	Spit of land in Balboa Harbor in Panama City	N 08° 53'	W 79° 32'	769	Costa Rica	147
109	Eastern tip of the island Isla Coiba called Punta Anegade western coast of peninsula De Azuero	N 07° 20'	W 81° 36'	830	Costa Rica	148
110	Tip of Cabo De Tres Puntas in Gulf of Honduras	N 15° 57'	W 88° 37'	710	Guatemala	149
111	Western tip of Grand Bahama Island at west end of settlement	N 26° 41'	W 79° 00'	526	Bahama Islands	153
112	Simms Point on New Providence Island	N 25° 02'	W 77° 35'	526	Bahama Islands	154
113	Powell Point on Eleuthera Island about 6 statute miles northwest of Free Town	N 24° 52'	W 76° 20'	526	Bahama Islands	155
114	Northern tip of Eleuthera Island about 5 statute miles northwest of Gregory Town opposite Northern Eleuthera Island	N 25° 26'	W 76° 36'	526	Bahama Islands	156
115	Southern tip of Long Island at point called Cape Verde	N 22° 51'	W 74° 51'	585	Bahama Islands	157
116	Columbus Point at southern tip of Cat Island	N 24° 08'	W 75° 16'	526	Bahama Islands	158
117	Southern tip of Castle Island about 4 statute miles south of Acklins Island	N 22° 07'	W 74° 20'	585	Bahama Islands	159
118	Southwest point of Mayaguana Island	N 22° 22'	W 73° 11'	585	Bahama Islands	160
119	Northwest Point on Great Inagua Island	N 21° 07'	W 73° 40'	585	Bahama Islands	161
120	Any point on southern tip of Grand Turk Island	N 21° 26'	W 73° 9'	585	West Indies (UK)	162
121	Western tip of sand bar outside city of Kingston in Jamaica	N 17° 56'	W 76° 51'	647	West Indies	163

Table 3-2. Terrestrial Landmarks (Cont)

L/M No.	Landmark	Latitude	Longitude	WAC Map	Area/ Country	Call Up
122	South Negril Point on western tip of Jamaica Island	N 18° 16'	W 78° 22'	647	West Indies	164
123	Westernmost tip of Anguilla Island	N 18° 10'	W 63° 11'	649	West Indies	165
124	Highest point (3596 ft) on Nevis Island	N 17° 09'	W 62° 34'	649	West Indies	166
125	Northeastern tip of Trinidad at Galera Point	N 10° 50'	W 60° 54'	772	West Indies	167
126	Galeota Point southeastern extremity of Trinidad Island 3.5 statute miles southeast of town Guayaguayere	N 10° 08'	W 60° 59'	772	West Indies	168
127	Any feature on Grand Cayman Island such as Conch Point	N 19° 23'	W 81° 22'	646	West Indies	169
128	Any point in mouth of Guantanamo Bay	N 19° 54'	W 75° 10'	585	Cuba	170
129	Western tip of Ile de la Tortue called Pointe Ouest	N 20° 04'	W 72° 59'	585	Haiti	171
130	Cabo Falso in bay called Bahia de las Aguilas on island of Hispaniola	N 17° 46'	W 71° 42'	648	Hispaniola	172
131	Any point on tip of land called Cabro Cabron in Dominican Republic	N 19° 21'	W 69° 12'	648	Dominican Republic	173
132	Southwestern tip of Puerto Rico at a point called Cabo Rojo	N 17° 56'	W 67° 12'	648	Puerto Rico	174
133	Westernmost tip of Puerto Rico at point called Punta Higuera	N 18° 22'	W 67° 16'	648	Puerto Rico	175
134	Some feature in harbor of San Juan	N 18° 28'	W 66° 07'	648	Puerto Rico	176
135	Eastern tip of Grande-Terre Island at point called Pointe des Chateaux	N 16° 15'	W 61° 11'	649	Guadaloupe (France)	177
136	Tip of peninsula on eastern coast of Martinique about 6.5 statute miles east of the town of La Trinite	N 14° 46'	W 60° 53'	705	Windward Islands	178
137	Hawaii Island at point called Ka Heiauo Kalalea (South Cape)	N 18° 55'	W 155° 41'	634	Hawaii	179
138	Eastern tip of Hawaii Island at point called Cape Kumukahi	N 19° 31'	W 154° 49'	634	Hawaii	180
139	Kaena Point on western tip of Oahu Island	N 21° 34'	W 158° 17'	599	Hawaii	181
140	Cape Halawa on eastern tip of Molahai Island	N 21° 09'	W 156° 43'	599	Hawaii	182
141	Northernmost tip of Kangaroo Island at Point Marsden 60 miles southwest of City Adelaide	S 35° 34'	E 137° 38'	1458	Australia	183
142	Southwest tip of Yorke Peninsula at Corny Point	S 34° 54'	E 137° 00'	1458	Australia	184
143	Southwest tip of Coffin Bay Peninsula at Point Widbey	S 34° 35'	E 136° 06'	1458	Australia	185
144	Southwest tip of Kangaroo Island at Cape Du Conedie	S 36° 04'	E 136° 41'	1468	Australia	186
145	Northern tip of Wardang Island at Island Point	S 34° 27'	E 137° 22'	1458	Australia	187
146	Any port at either Port Augusta or Port Augusta West	S 32° 29'	E 137° 46'	1458	Australia	188
147	Sugarloaf Point approximately 110 m.m. northeast of Sidney	S 32° 26'	E 152° 31'	1456	Australia	189

Table 3-2. Terrestrial Landmarks (Cont)

L/M No.	Landmark	Latitude	Longitude	WAC Map	Area/ Country	Call Up
148	Point at city of Sidney such as Port Jackson or Cape Banks	S 33° 51'	E 151° 17'	1456	Australia	190
149	Southernmost tip of Cape Arid southeast of Tagon Harbour and southwest of Sandy Bight	S 34° 02'	E 123° 09'	1460	Australia	191
150	Cape Le Grand southeast of Esperance Bay southeast of Mississippi Bay	S 34° 00'	E 122° 05'	1460	Australia	192
151	Any point at city of Albany in King George Sound	S 35° 02'	E 117° 55'	1461	Australia	193
152	Cape Naturaliste located in Geographe Bay	S 33° 32'	E 115° 00'	1461	Australia	194
153	Cape Leeuin at Flinders Bay	S 34° 23'	E 115° 08'	1461	Australia	195
154	Mouth of Swan River at City of Perth	S 32° 03'	E 115° 44'	1461	Australia	196
155	Northern tip of lagoon at town called Ballina	S 28° 52'	E 153° 35'	1357	Australia	197
156	Cape Peron at northern tip of Peron Peninsula between Dirk Hartog Island on mainland	S 25° 32'	E 113° 29'	1346	Australia	198
157	Southern tip of Dorre Island at point called Cape St Cricq	S 25° 18'	E 113° 05'	1346	Australia	199
158	Pointe Lookout which is northeastern tip of North Stradbroke Island	S 27° 25'	E 153° 33'	1340	Australia	200
159	Cape Moreton which is northeastern tip of Moreton Island	S 27° 02'	E 153° 28'	1340	Australia	201
160	Double Island Point located at Wilde Bay	S 25° 56'	E 153° 11'	1340	Australia	202
161	Sandy Cape located at northern tip of Fraser Island	S 24° 42'	E 153° 16'	1340	Australia	203
162	Easternmost point at tip of North West Cape	S 21° 49'	E 114° 11'	1229	Australia	204
163	Northwestern tip of Legendre Island	S 20° 21'	E 116° 50'	1229	Australia	205
164	Pasco Island located off southern tip of Barrow Island	S 20° 58'	E 115° 21'	1229	Australia	206
165	Northern tip of South Island which is one of Percy Islands	S 21° 43'	E 150° 21'	1235	Australia	207
166	Gantheaume Point just north of Roebuck Bay	S 17° 59'	E 122° 10'	1223	Australia	208
167	Cape Bowling Green in northern tip of sandbar	S 19° 19'	E 147° 25'	1219	Australia	209
168	Eastern tip of Great Palm Island one of Palm Islands off eastern coast of Australia	S 18° 46'	E 146° 42'	1219	Australia	210
169	Cape Ford located southwest of Anson Bay	S 13° 26'	E 129° 53'	1109	Australia	211
170	Cape Hay located southwest of Hyland Bay	S 14° 03'	E 129° 28'	1109	Australia	212
171	Any point at city of Darwin	S 28° 12'	E 130° 51'	1109	Australia	213
172	Southwest tip of Maria Island located in Limmen Bight	S 14° 55'	E 135° 41'	1110	Australia	214
173	Southern tip of Duifhen Point on western coast of Cape Yorke Peninsula	S 12° 33'	E 141° 39'	1111	Australia	215
174	Cape Direction located east of Lloyd Bay	S 12° 51'	E 143° 32'	1111	Australia	216

Table 3-2. Terrestrial Landmarks (Cont)

L/M No.	Landmark	Latitude	Longitude	WAC Map	Area/ Country	Call Up
175	Cullen Point at bay called Port Musgrave on west coast of Cape Yorke Peninsula	S 11° 58'	E 141° 55'	1097	Australia	217
176	Cape Croker on northern tip of Croker Island	S 10° 57'	E 132° 36'	1099	Australia	218
177	Northeast Point on Christmas Island	S 10° 24'	E 105° 45'	1103	Australia	219
178	Tandjoeng Poerwa at western tip of island called Shiereiland Poerwa	S 08° 45'	E 114° 21'	1102	Indonesia	220
179	Northern tip of peninsula called Tandjoeng Somboeloengan north of Schieriland Poerwa	S 08° 27'	E 114° 24'	1102	Indonesia	221
180	Tandjoeng Sasar peninsula on northernmost point of Soemba (Sumba) Island	S 09° 15'	E 119° 56'	1101	Indonesia	222
181	Lambok Island southeast tip of Lake Anak Meer west of active volcano called Goenoeng Rindjani	S 08° 25'	E 116° 25'	1101	Indonesia	223
182	Tandjoeng Gede (Java Head) at western tip of Java	S 06° 45'	E 105° 12'	981	Indonesia	224
183	Balimbing at southern tip of Sumatra and western tip of peninsula forming Semangko Bay with mainland	S 05° 55'	E 104° 33'	981	Indonesia	225
184	Taboetoele Island of Southwest Celebres in strait called Salajak	S 05° 39'	E 120° 26'	984	Indonesia	227
185	Southern tip of Salajak Island south of Southwest Celebes	S 06° 30'	E 120° 29'	984	Indonesia	228
186	Tandjoeng (Cape) Berikat on east tip of Bangha Island in South China Sea	S 02° 34'	E 106° 50'	980	Indonesia	229
187	Tandjoeng (Cape) Djang on east tip of Poelan (Island) Lingga	S 00° 18'	E 105° 00'	980	Indonesia	230
188	Tandjoeng Karang in Northern Celebes	S 00° 38'	E 119° 45'	978	Indonesia	231
189	Kaap (Cape) Williams on west coast of Celebes at bay called Mamoedjuebaai	S 02° 37'	E 118° 48'	978	Indonesia	232
190	Hoek (Cape) Van Mandar in western Celebes	S 03° 34'	E 118° 56'	978	Indonesia	233
191	Town of Popedi on peninsula off north Celebes Island	S 00° 01'	E 119° 40'	978	Indonesia	234
192	Tanjong Sial on southwestern tip of Saram Island	S 03° 33'	E 127° 55'	976	Indonesia	235
193	Udjung (Point) Batu Mamak south of the Teluk (inlet) Tapanuli	N 01° 33'	E 98° 43'	920	Indonesia	236
194	Isthmus where Pulau Island in Lake Danan Toba joins mainland of central Sumatra	N 02° 36'	E 98° 41'	920	Indonesia	237
195	Some feature in vicinity of city of Singapore	N 01° 15'	E 103° 49'	860	Indonesia	238
196	Tanjong (Cape) Datu at northwest tip of Borneo at border between Indonesia and northwest Sarawak	N 02° 05'	E 109° 38'	861	Indonesia	239
197	Northern tip of Pulau Lembeh Island off northeast coast of Celebes	N 01° 33'	E 125° 17'	863	Indonesia	240
198	Tanjong Bisoa at northern tip of Halmakera Island one of Molucca Islands	N 02° 13'	E 127° 57'	864	Indonesia	241
199	Eastern tip of Halmakera Island at point called Tanjong Ngolopopo	N 00° 12'	E 128° 54'	864	Indonesia	242

Table 3-2. Terrestrial Landmarks (Cont)

L/M No.	Landmark	Latitude	Longitude	WAC Map	Area/ Country	Call Up
200	Tanjong Sempand Mangayau north of town of Keretang in North Borneo	N 07° 03'	E 116° 45'	857	North Borneo and Sarawak	243
201	Tanjang Baram south of mouth of Batang Baram River in Sarawak	N 04° 35'	E 113° 58'	857	North Borneo and Sarawak	244
202	Northeast tip of Ko Joi Island in lagoon called Lake Lnang at point where island is nearest sandbar	N 07° 35'	E 100° 18'	857	North Borneo and Sarawak	245
203	Poelau Jaco a small island at eastern tip of Timor Island (highest point 266 ft)	S 08° 26'	E 127° 19'	1100	Portuguese Timor	246
204	Town of Oisina at tip of Timor Island	S 10° 21'	E 123° 26'	1100	Portuguese Timor	247
205	Southeast tip of Poelau (Island) Adi off New Guinea	S 19° 4'	E 133° 36'	986	New Guinea	248
206	Singer Island in Lake Wisdom located in Long Island	S 05° 19'	E 147° 05'	988	New Guinea	249
207	Tandjoeng Fatagar on western tip of Schiereiland (Peninsula) Onin	S 02° 46'	E 131° 57'	976	New Guinea	250
208	Tandjoeng Woka on western tip of Japan Island north of Geelvink Bay	S 01° 36'	E 135° 25'	975	New Guinea	251
209	Tandjoeng Menori northwest of Geelvink Bay	S 00° 51'	E 134° 08'	975	New Guinea	252
210	Southern tip of Cape San Agustin on southeastern Mindanao Island	N 06° 15'	E 126° 11'	855	Philippines	253
211	Pucia Point southwest tip of a peninsula on Panay Island western end of Ranlan Bay	N 11° 46'	E 121° 50'	742	Philippines	255
212	Sangley Point in Manila Bay on Luzon Island	N 14° 30'	E 120° 54'	735	Philippines	256
213	Cape San Ildefonsa on southern tip of San Ildefonso Peninsula east coast Luzon Island	N 16° 02'	E 121° 59'	620	Philippines	257
214	Taguntun Point at southern tip of Cantanduanes	N 13° 31'	E 124° 12'	735	Philippines	258
215	Cape Zelee at southern tip of Maramasika Island	S 09° 48'	E 161° 33'	1094	Southwest Pacific	259
216	Cape St George at south tip of New Ireland Island	S 04° 54'	E 152° 53'	989	Southwest Pacific	260
217	Northern tip of peninsula in Lake Dakataua near northern coast of New Britian Island	S 05° 00'	E 150° 06'	989	Southwest Pacific	261
218	Motupena Point off western coast of Bougainville Island	S 06° 31'	E 155° 10'	990	Southwest Pacific	262
219	Cape Cumberland at northern tip of Espiritu Island	S 14° 37'	E 166° 37'	1115	Southwest Pacific	263
220	North Point on Aurora Island	S 14° 55'	E 168° 06'	1115	Southwest Pacific	264
221	Cap Lefevre on western tip of Ile Lifou	S 20° 55'	E 167° 02'	1238	Southwest Pacific	265
222	Cap Ouabao at southwestern tip of Ile Mare	S 21° 36'	E 167° 50'	1238	Southwest Pacific	266
223	Northwest tip of Ile (Island) de Phu Quoc in Gulf of Saim	N 10° 22'	E 103° 51'	739	Vietnam	267
224	Cap (Cape) Saint Jacques off southwest coast of Vietnam 40 m.m. southeast of Saigon	N 10° 19'	E 107° 05'	739	Vietnam	268
225	Southern tip of peninsula south of town of Ba Gia east of Honlon Island	N 12° 34'	E 109° 26'	739	Vietnam	269

Table 3-2. Terrestrial Landmarks (Cont)

L/M No.	Landmark	Latitude	Longitude	WAC Map	Area/ Country	Call Up
226	Town of Konlie at northern tip of Babelthuap Island one of Palau Islands	N 07° 43'	E 134° 37'	854	Northwest Pacific	270
227	Southwestern tip of Yap Island one of Carolina Islands	N 09° 26'	E 138° 04'	744	Northwest Pacific	271
228	Some point in Apra Harbor on Guam Island	N 13° 27'	E 144° 37'	731	Northwest Pacific	272
229	Northern tip of Aruba Island at town of Kudarebe	N 12° 37'	W 70° 04'	707	Netherland Antilles	273
230	Northern tip of peninsula called Puenta San Francisco Solano located in gulf called Gulfo De Cupica in Gulf of Panama	N 06° 17'	W 77° 28'	829	Columbia	069

Table 3-3. Lunar Landmarks

UDL Call Up	Terminator at 024° Longitude	Longitude	Latitude
001	1. IAU No. 4336 Magelhaens	44° 57' 24"	-12° 40' 52"
002	2. IAU No. 267 Vitrovius	33° 47' 47"	17° 46' 28"
003	3. IAU No. 519 Dawes	26° 19' 37"	17° 13' 03"
	Terminator at 012° Longitude		
004	4. IAU No. 536 Arago	21° 22' 57"	6° 10' 31"
005	5. IAU No. 553 Dionipius	17° 16' 31"	2° 48' 04"
	Terminator at 000° Longitude		
006	6. IAU No. 606 Sulticius	11° 39' 06"	19° 35' 26"
007	7. IAU No. 3607 Pickering	7° 00' 09"	-2° 50' 10"
	Terminator at 348° Longitude		
008	8. IAU No. 891 Conon	1° 57' 48"	21° 37' 56"
009	9. IAU No. 1212 Bode	357° 34' 57"	6° 44' 36"
010	10. IAU No. 3021 Lassell	352° 08' 45"	-15° 26' 24"
	Terminator at 336° Longitude		
011	11. IAU No. 1500 Gambart C	348° 13' 37"	3° 20' 46"
012	12. IAU No. 1497 Gambart	344° 48' 12"	0° 57' 00"
	Terminator at 324° Longitude		
013	13. IAU No. 1438 Gay-Lassac A	339° 41' 31"	13° 10' 39"
014	14. IAU No. 1519 Hortensius	332° 05' 08"	6° 28' 13"
	Terminator at 312° Longitude		
015	15. IAU No. 2412 Gassendi A	320° 18' 08"	-15° 31' 19"
016	16. IAU No. 2443 Flamsteed	315° 41' 39"	-4° 29' 38"

NOTE: Landmarks from Army Map Service (AMS) list. The terminator for each set of the calibrated landmarks must provide for an illuminated moon to the right (east) of the terminator. IAU refers to the International Astronomical Union numbers from the Named Lunar Formations.

Table 3-4. AMS Navigation Stars

UDL Call Up	Generic Name	Star Name	Magnitude	Right Ascension	Declination
001	αAndromedae	Alpheratz	2.1	0:06:28.2	+28°53'10"
002	βCeti	Deneb Kaitos (Diphda)	2.2	0:41:43.9	-18°11'22"
003	αEridani	Achernar	0.6	1:36:20.3	-57°25'28"
004	*αUrsae Minoris	Polaris	2.1	1:57:53.8	+89° 5'33"
005	αArietis	Hamal	2.2	2:05:04.9	+23°17'18"
006	*αFornax	Alpha Fornax	3.9	3:10:29.9	-29° 7'55"
007	αPersei	Marfak	1.9	3:21:40.2	+49°43'52"
008	αTauri	Aldebaran	1.1	4:33:47.7	+16°26'11"
009	αCanis Majoris	Sirius	-1.6	6:43:31.1	-16°39'50"
010	βGeminorum	Pollux	1.2	7:43:03.3	+28° 7' 2"
011	*γVelorum	Gamma Velorum	1.9	8:08:23.5	-47°13'37"
012	αCarinae	Mioplacidus	1.8	9:12:48.2	-69°33'53"
013	αHydrae	Alphard	2.2	9:25:46.1	-8°29'51"
014	αLeonis	Regulus	1.3	10:06:24.2	+12° 8'55"
015	αUrsae Majoris	Dubhe	1.9	11:01:27.6	+61°57' 4"
016	*γCentauri	Gamma Centauri	2.4	12:39:28.0	-48°45'25"
017	αVirginis	Spica	1.2	13:23:14.4	-10°58' 8"
018	ηUrsae Majoris	Alkaid	1.9	13:46:05.0	+49°29'50"
019	αBootis	Arcturus	0.2	14:13:58.4	+19°22'27"
020	αCentauri	Rigil Kentaurus	0.1	14:37:04.3	-60°41' 2"
021	αScorpii	Antares	1.2	16:27:08.1	-26°21' 6"
022	αOphiuchi	Rasalhague	2.1	17:33:12.9	+12°35' 8"
023	αLyrae	Vega	0.1	18:35:41.1	+38°44'53"
024	*βCapricornus	Beta Capricornus	3.2	20:18:56.0	-14°53'59"
025	αPavonis	Peacock	2.1	20:22:43.9	-56°51'20"
026	αCygni	Deneb	1.3	20:40:10.1	+45° 8'50"
027	εPegasi	Enif	2.5	21:43:22.0	+9°42'16"
028	αPiscis Aistrini	Fomalhaut	1.3	22:55:36.6	-29°49' 8"

*Not accurately positioned for navigation purposes on the celestial sphere.

Table 3-5. Simulated MSFN Stations (Nonintegrated Mode)

Station	Code	Location	Latitude	Longitude
1	CNV	Cape Kennedy, Florida	28° 28' N	80° 34' W
2	HAW	Kauae, Hawaii	22° 07' N	159° 46' W
3	BDA	Bermuda	32° 20' N	64° 39' W
4	CYI	Grand Canary Islands	27° 44' N	15° 36' E
5	GYM	Guaymas, Mexico	27° 57' N	110° 43' W
6	CRO	Carmaroon, Australia	24° 53' S	113° 42' E
7	TEX	Corpus Christi, Texas	29° 45' N	95° 21' W
8	ISH	Insertion Ship	29° 00' N	57° 30' W
9	INJ	Injection Ship	30° 00' N	177° 00' E
10		Reentry Ship	00°	180°

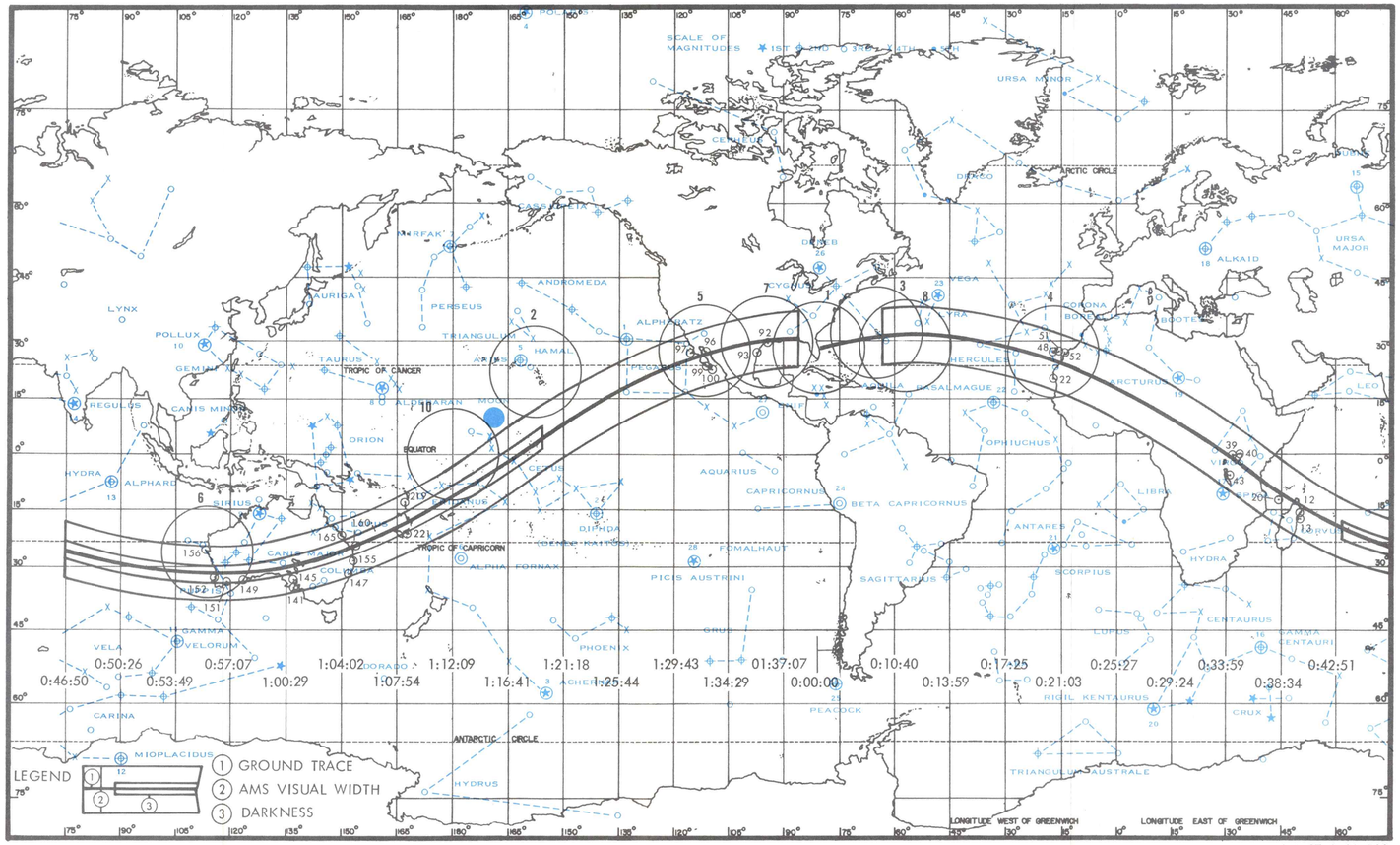

SM-6T-2-02-500

Figure 3-4. Navigation Reference Data Orbit 1

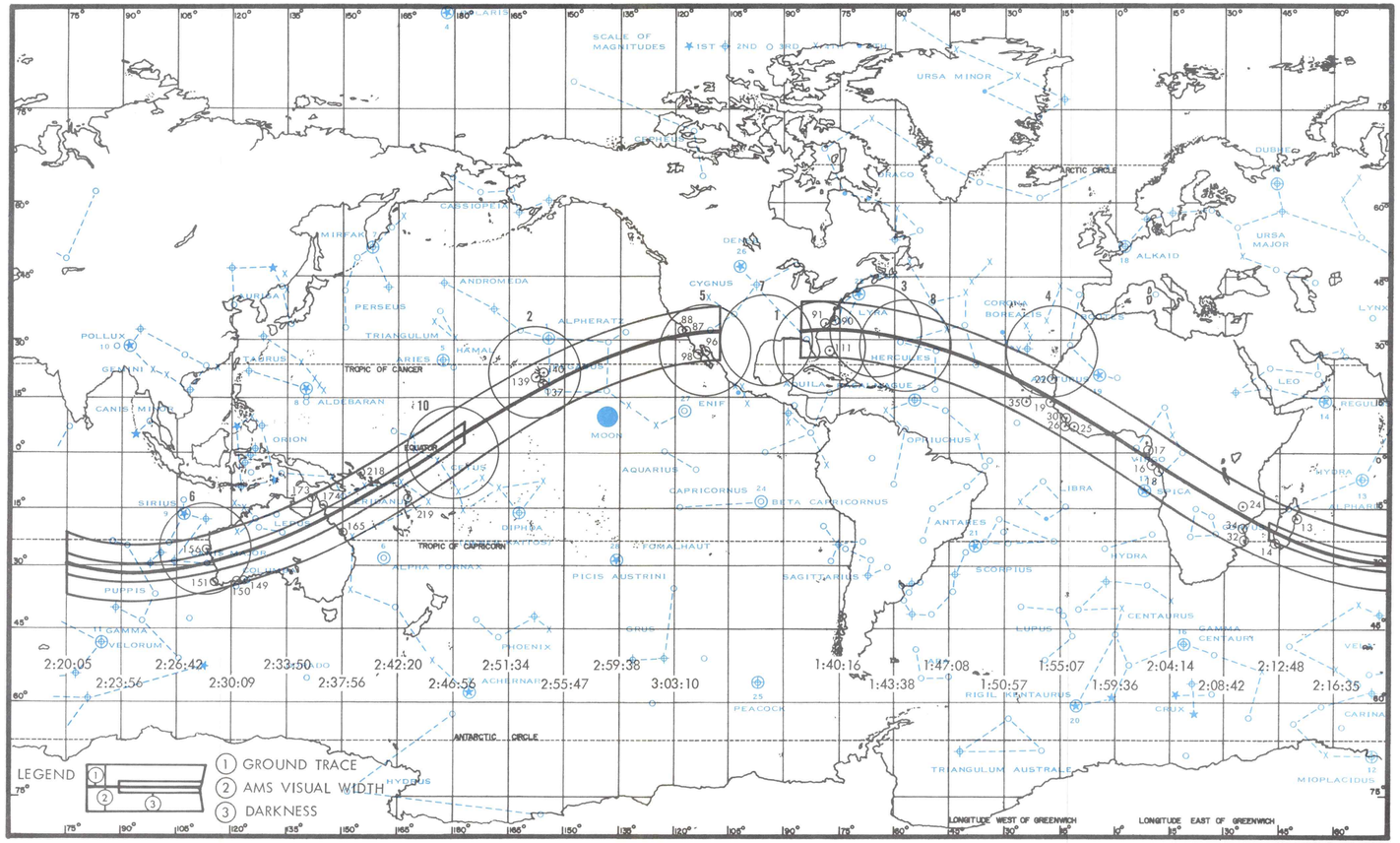

SM-6T-2-02-501

Figure 3-5. Navigation Reference Data, Orbit 2

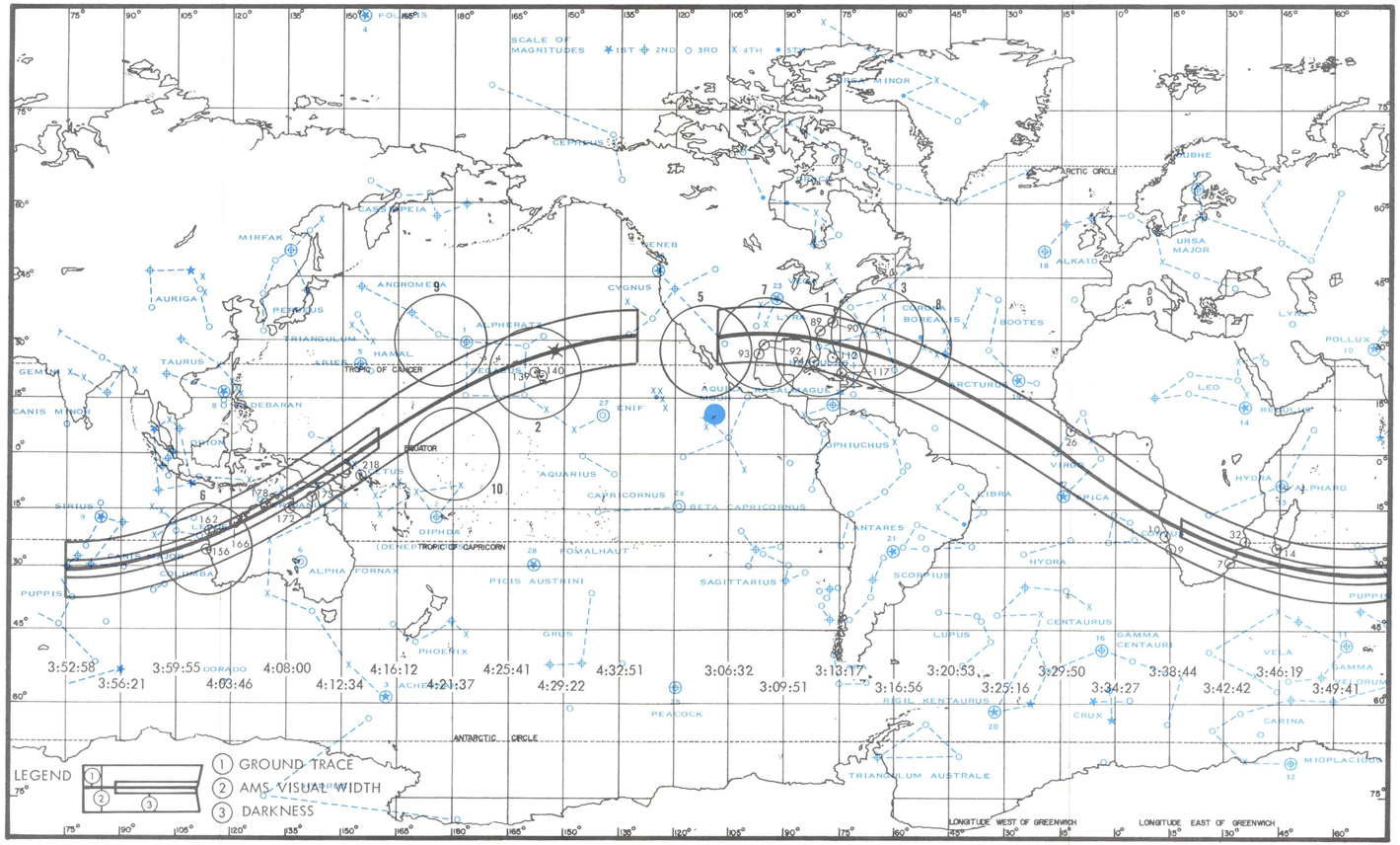

SM-6T-2-02-502

Figure 3-6. Navigation Reference Data, Orbit 3

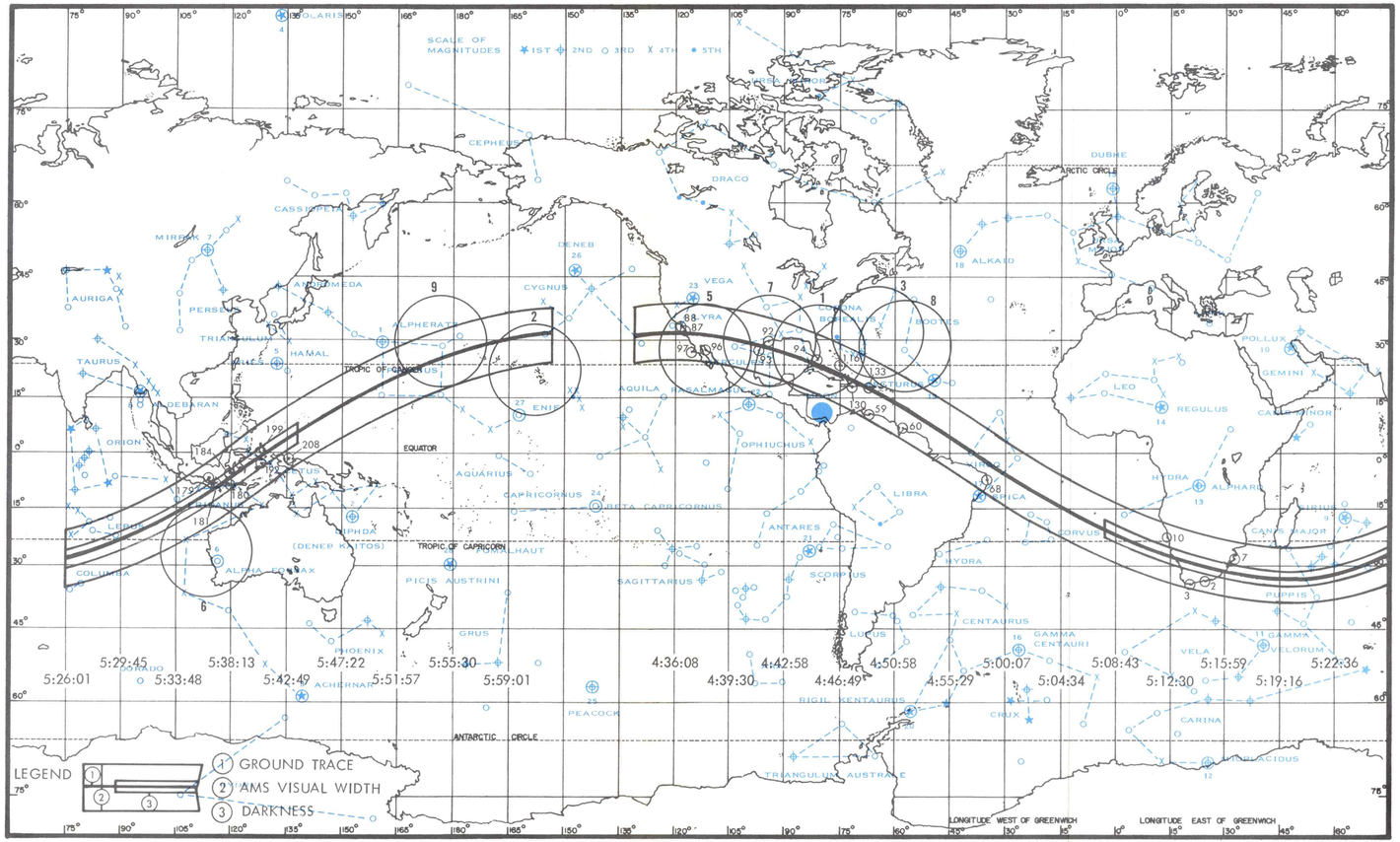

SM-6T-2-02-503

Figure 3-7. Navigation Reference Data, Orbit 4

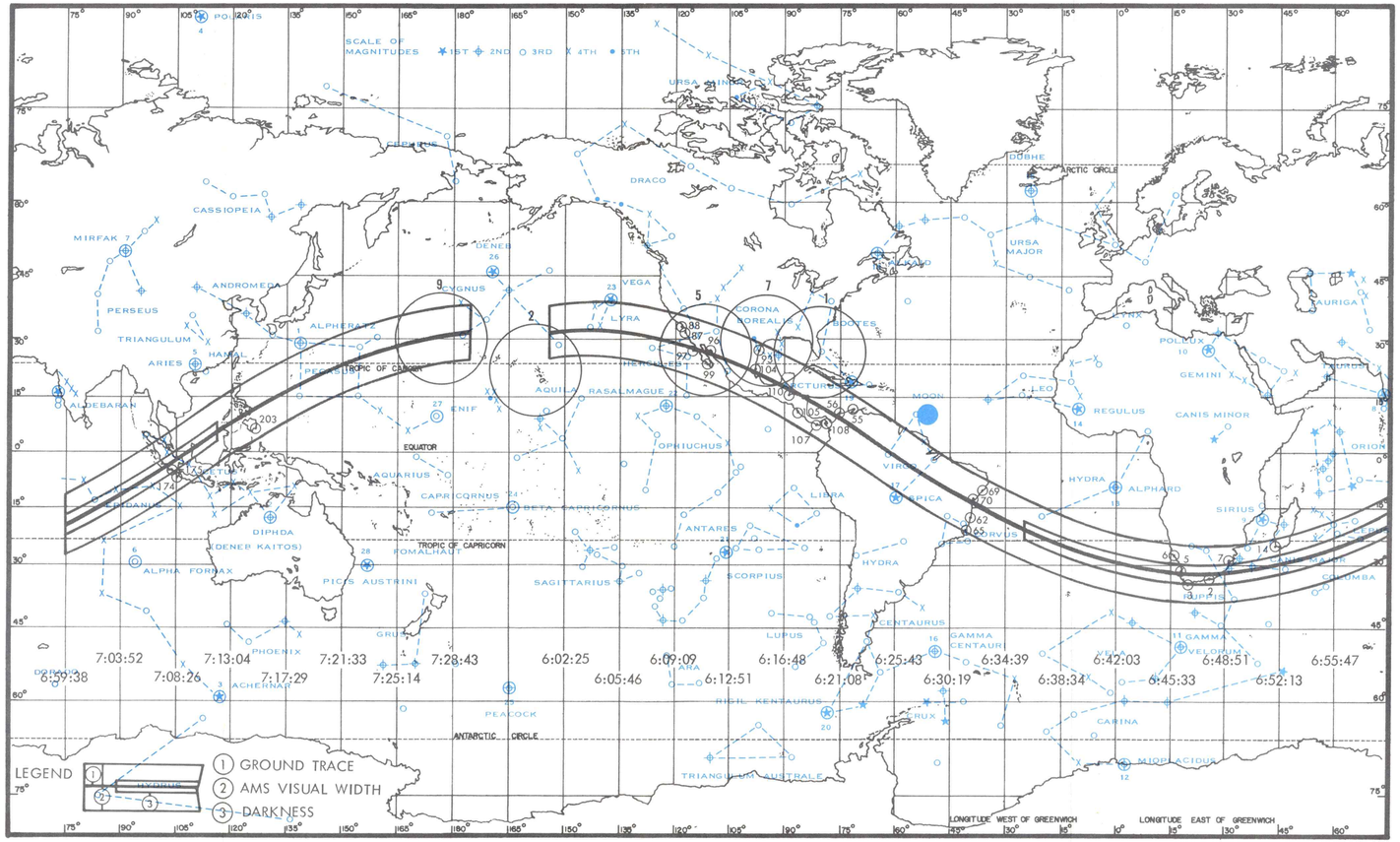

SM-6T-2-02-504

Figure 3-8. Navigation Reference Data, Orbit 5

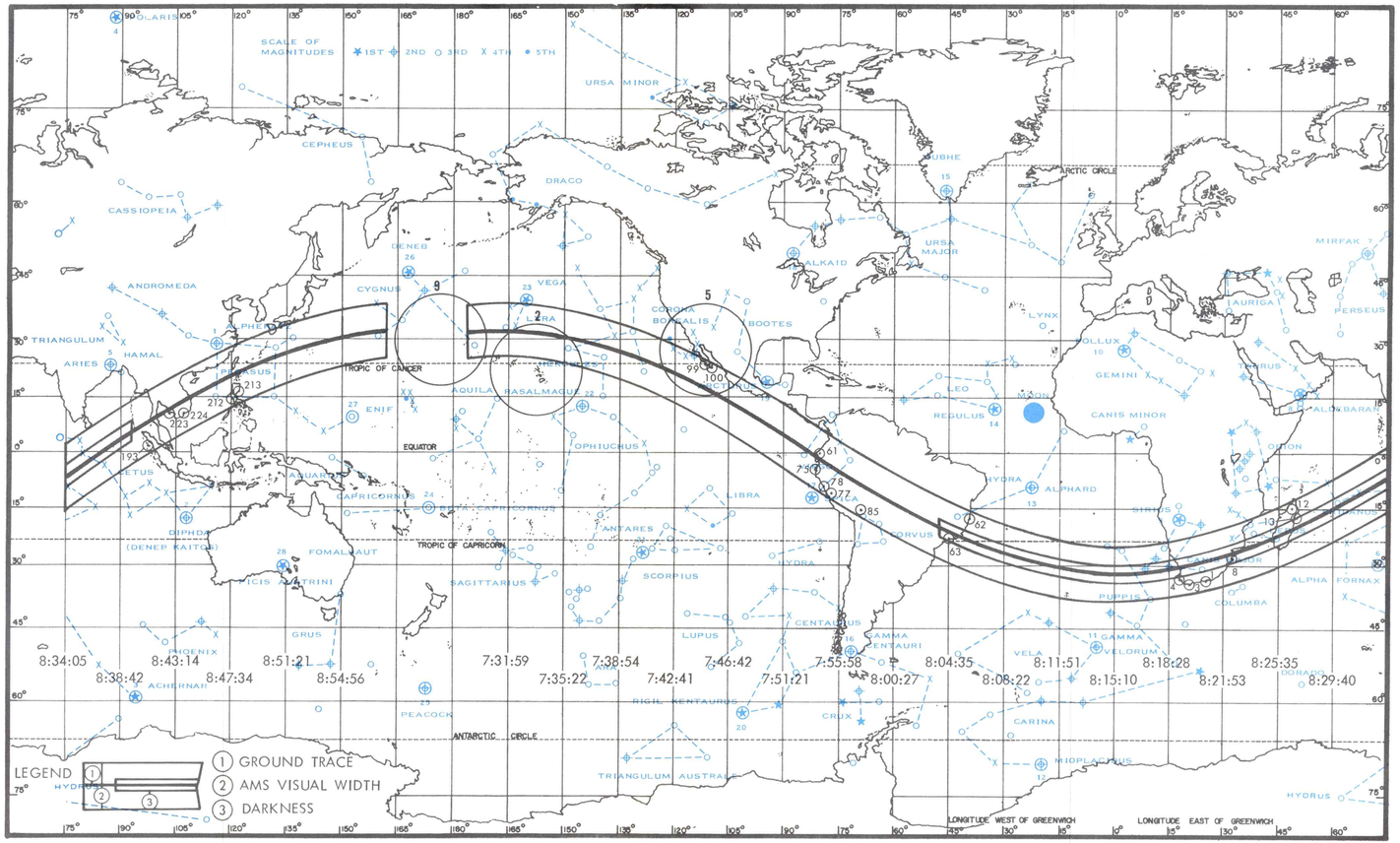

SM-6T-2-02-505

Figure 3-9. Navigation Reference Data, Orbit 6

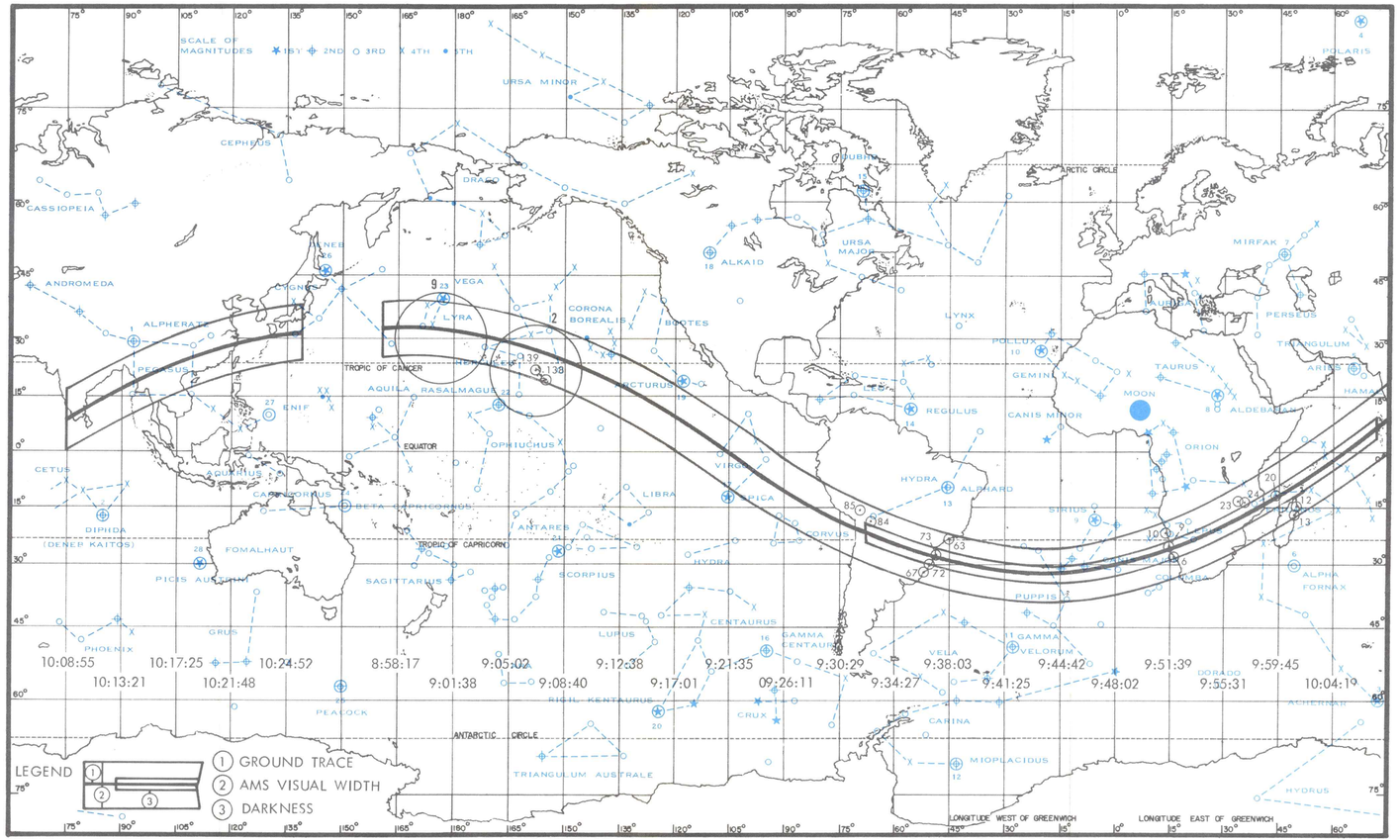

SM-6T-2-02-506

Figure 3-10. Navigation Reference Data, Orbit 7

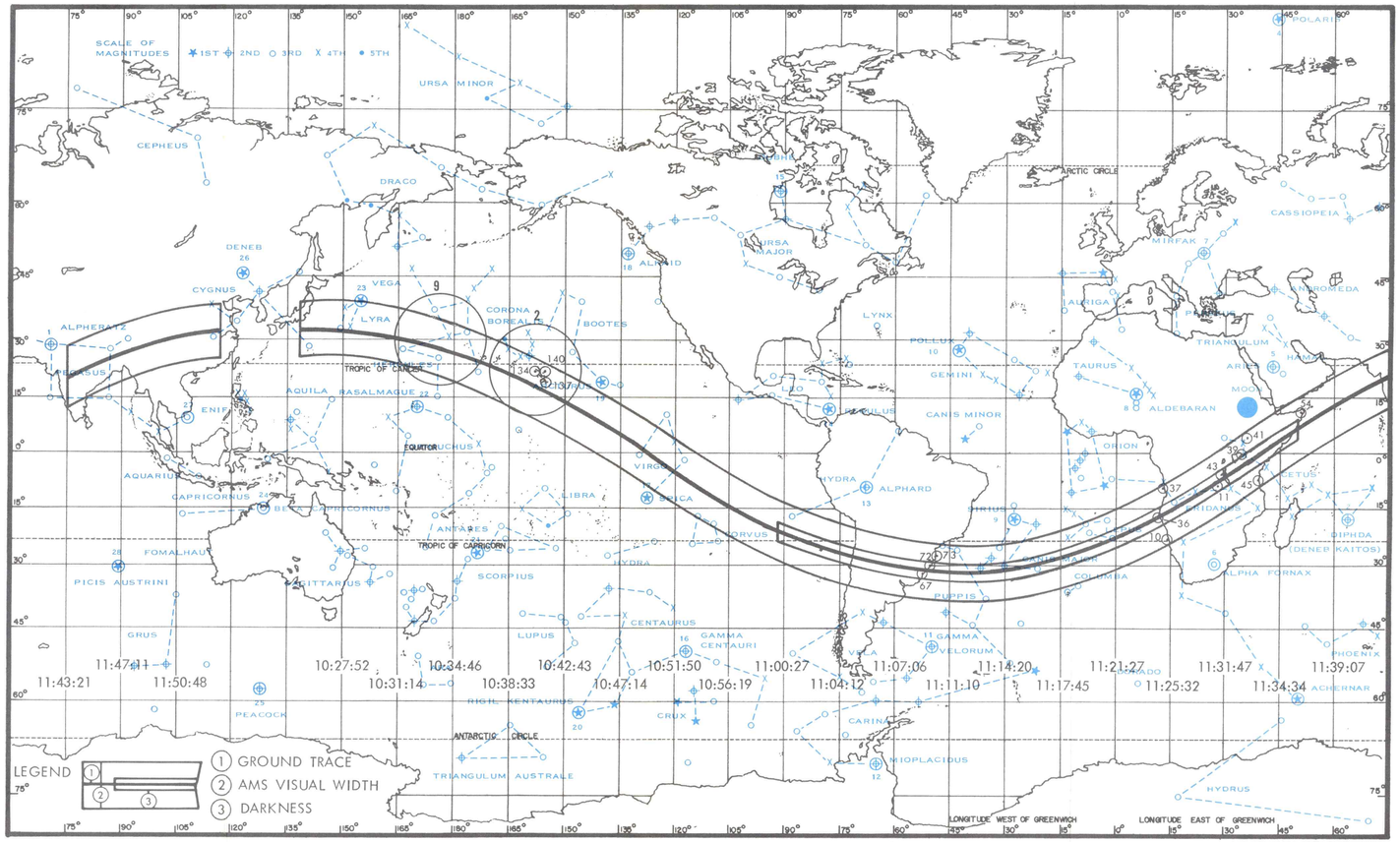

SM-6T-2-02-507

Figure 3-11. Navigation Reference Data, Orbit 8

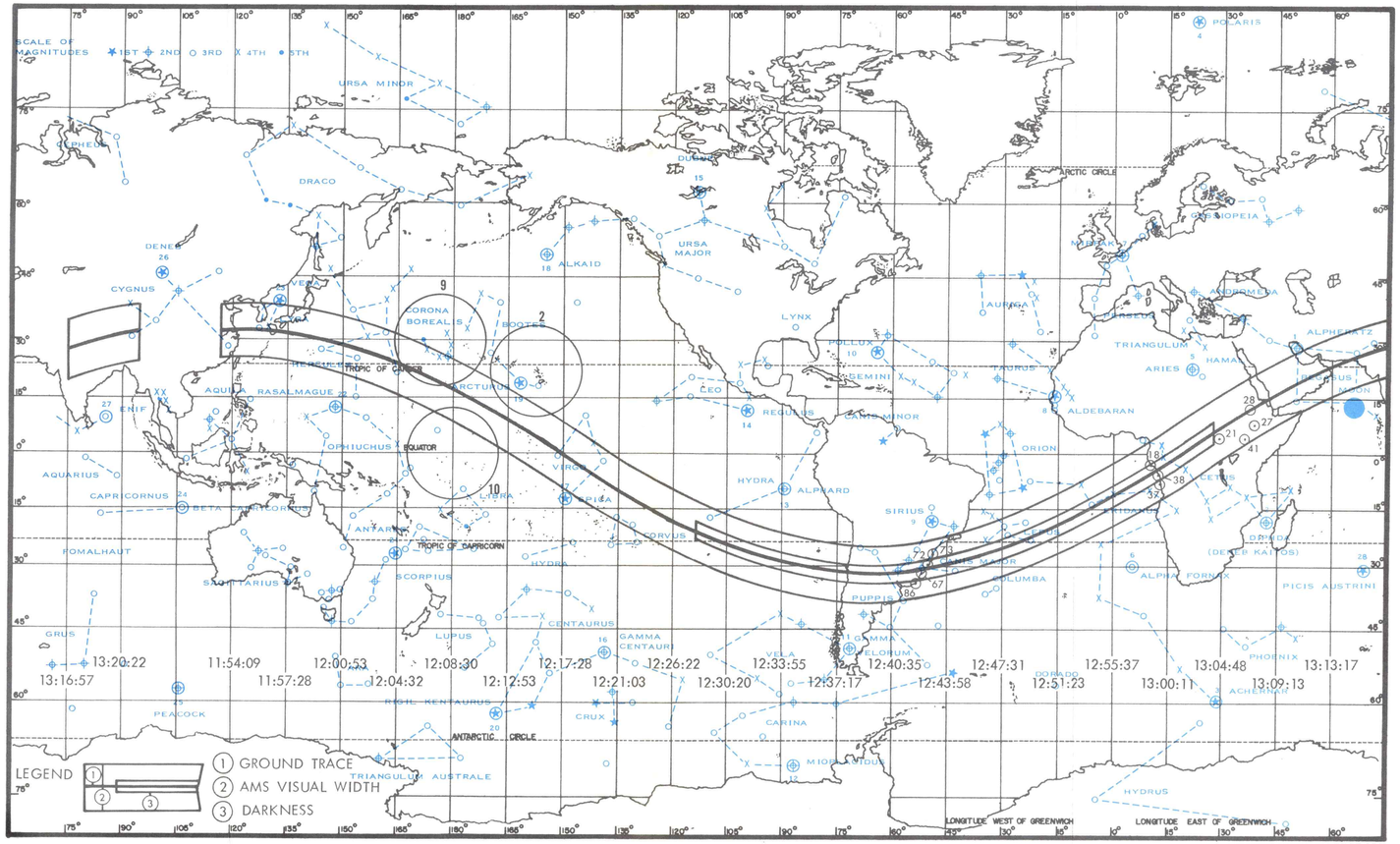

SM-6T-2-02-508

Figure 3-12. Navigation Reference Data, Orbit 9

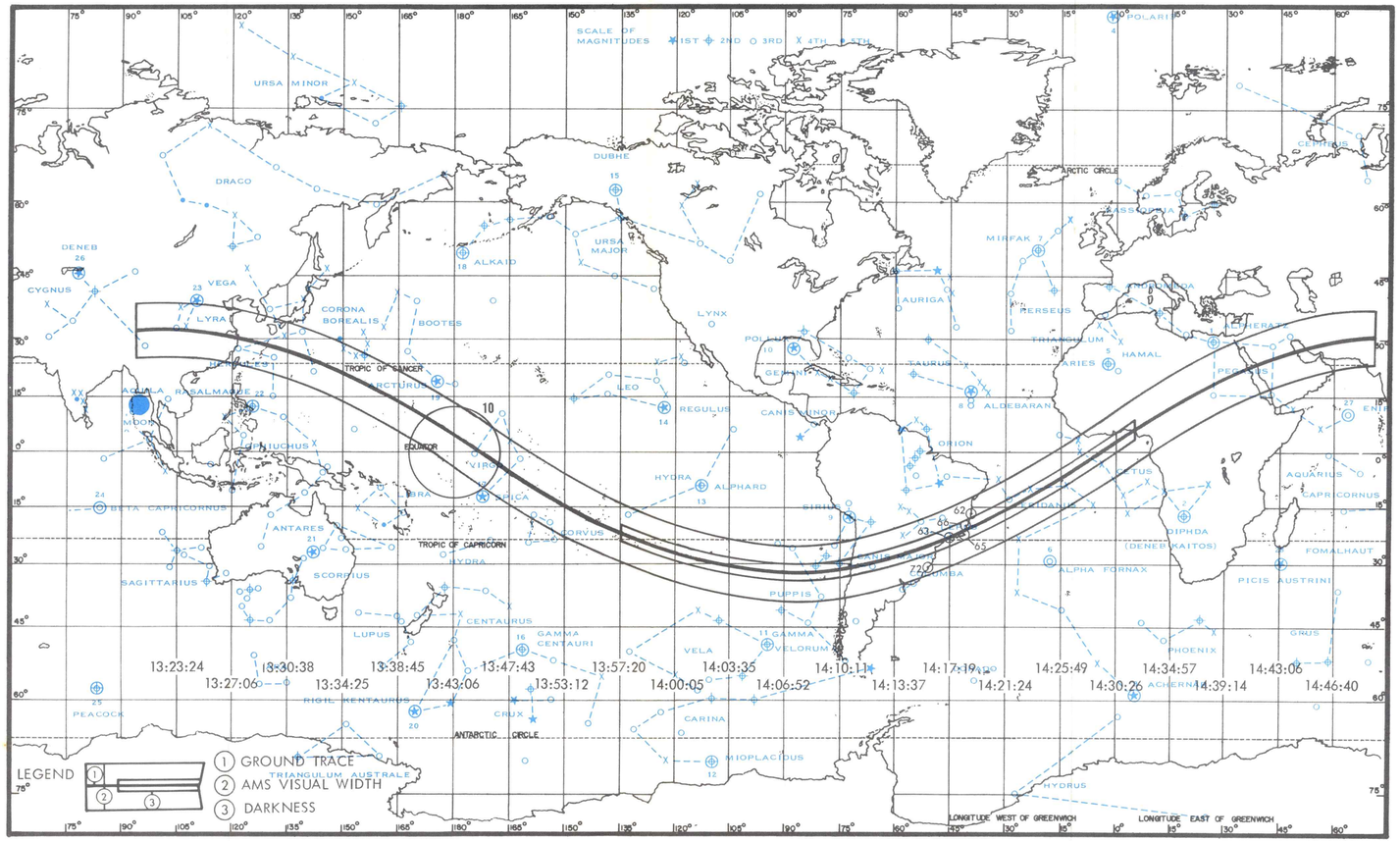

SM-6T-2-02-509

Figure 3-13. Navigation Reference Data, Orbit 10

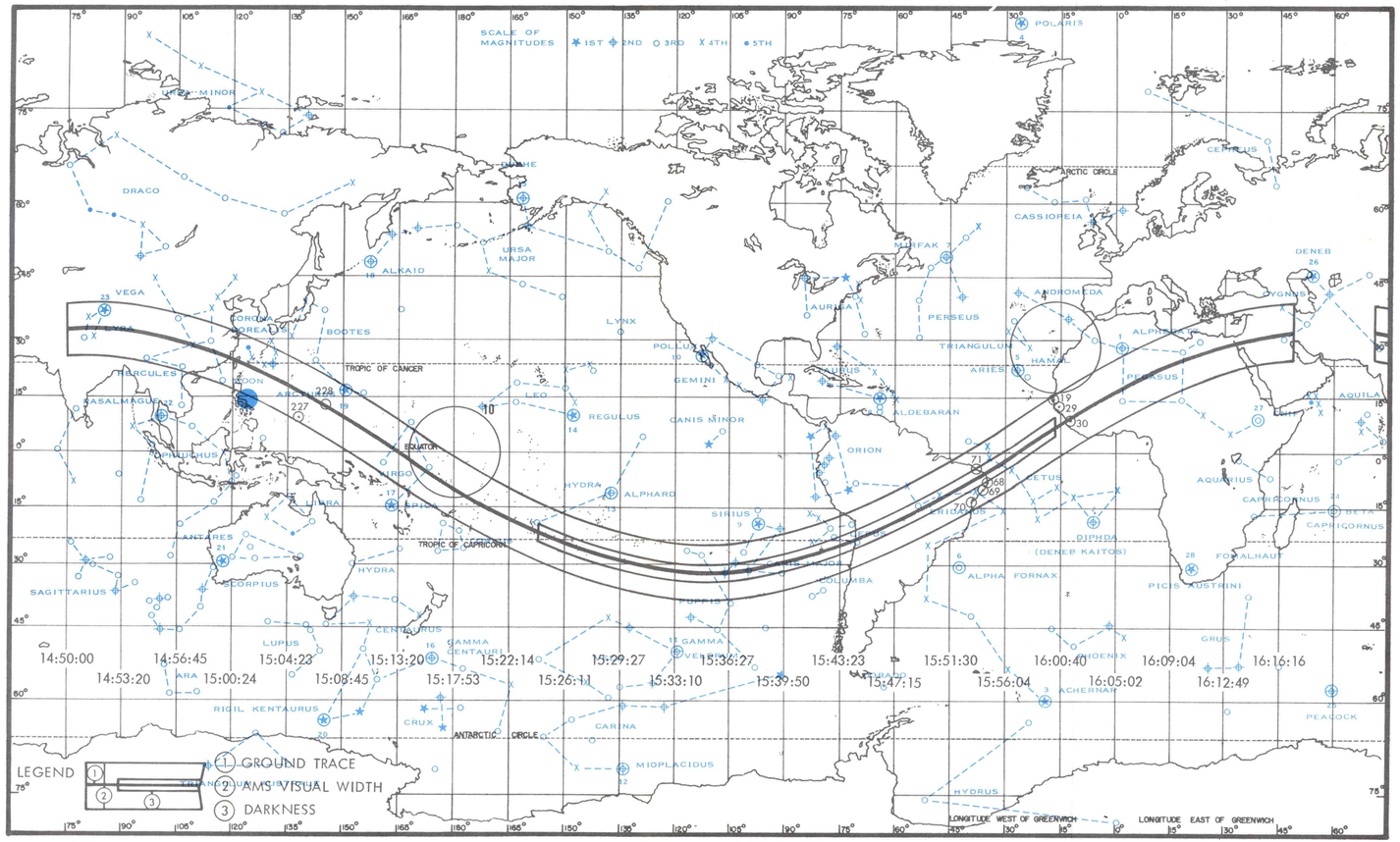

SM-6T-2-02-510

Figure 3-14. Navigation Reference Data, Orbit 11

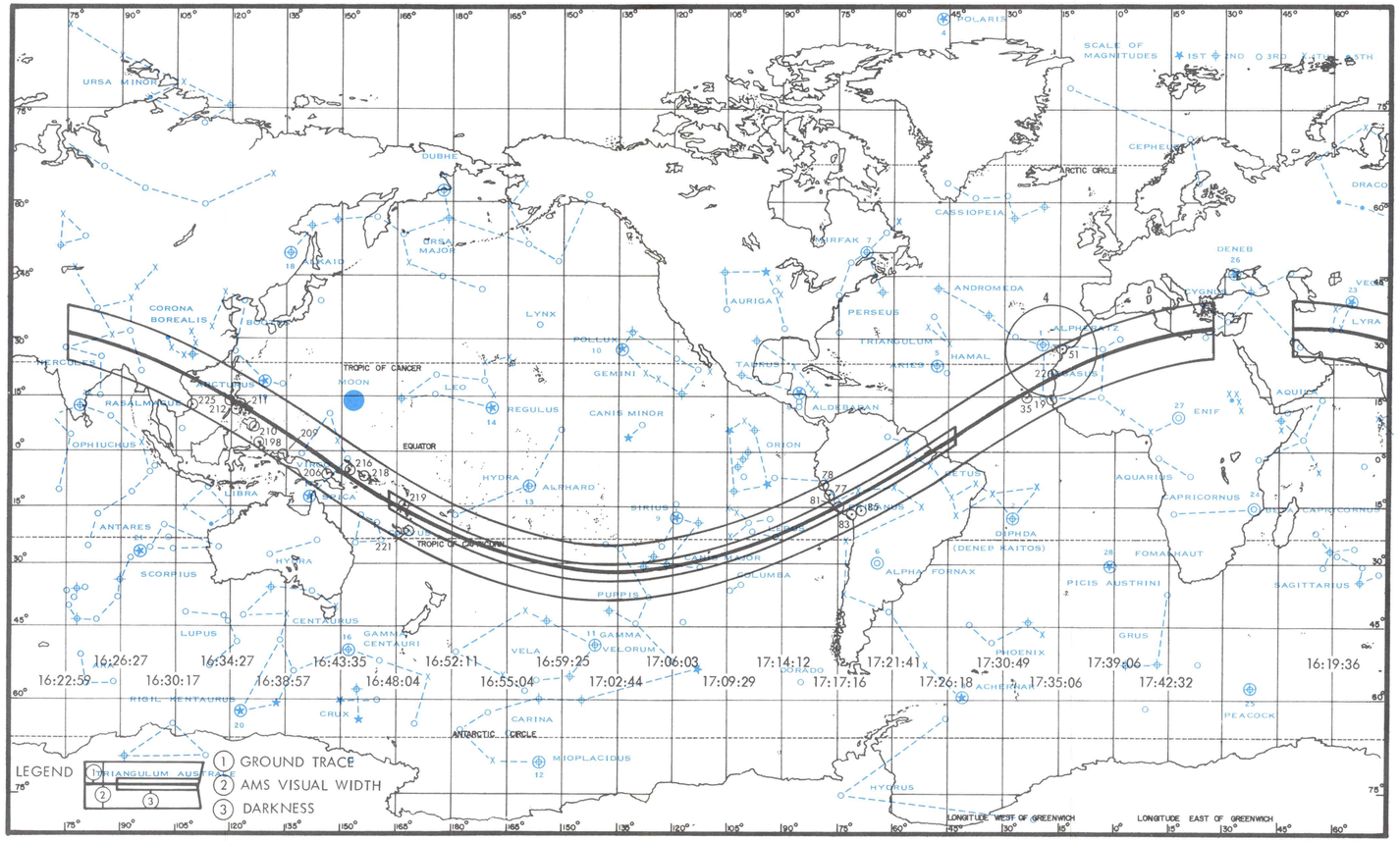

SM-6T-2-02-511

Figure 3-15. Navigation Reference Data, Orbit 12

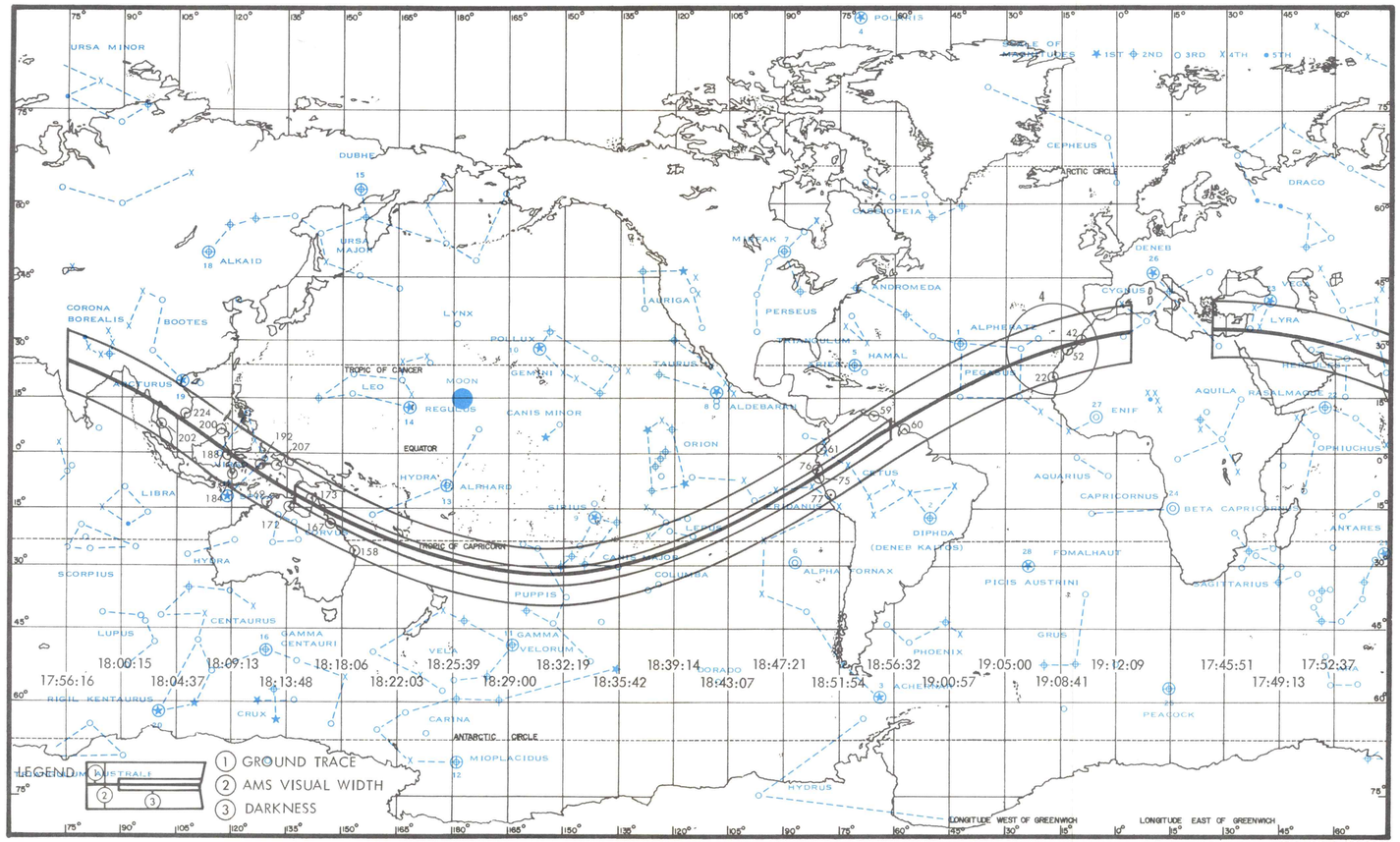

SM-6T-2-02-512

Figure 3-16. Navigation Reference Data, Orbit 13

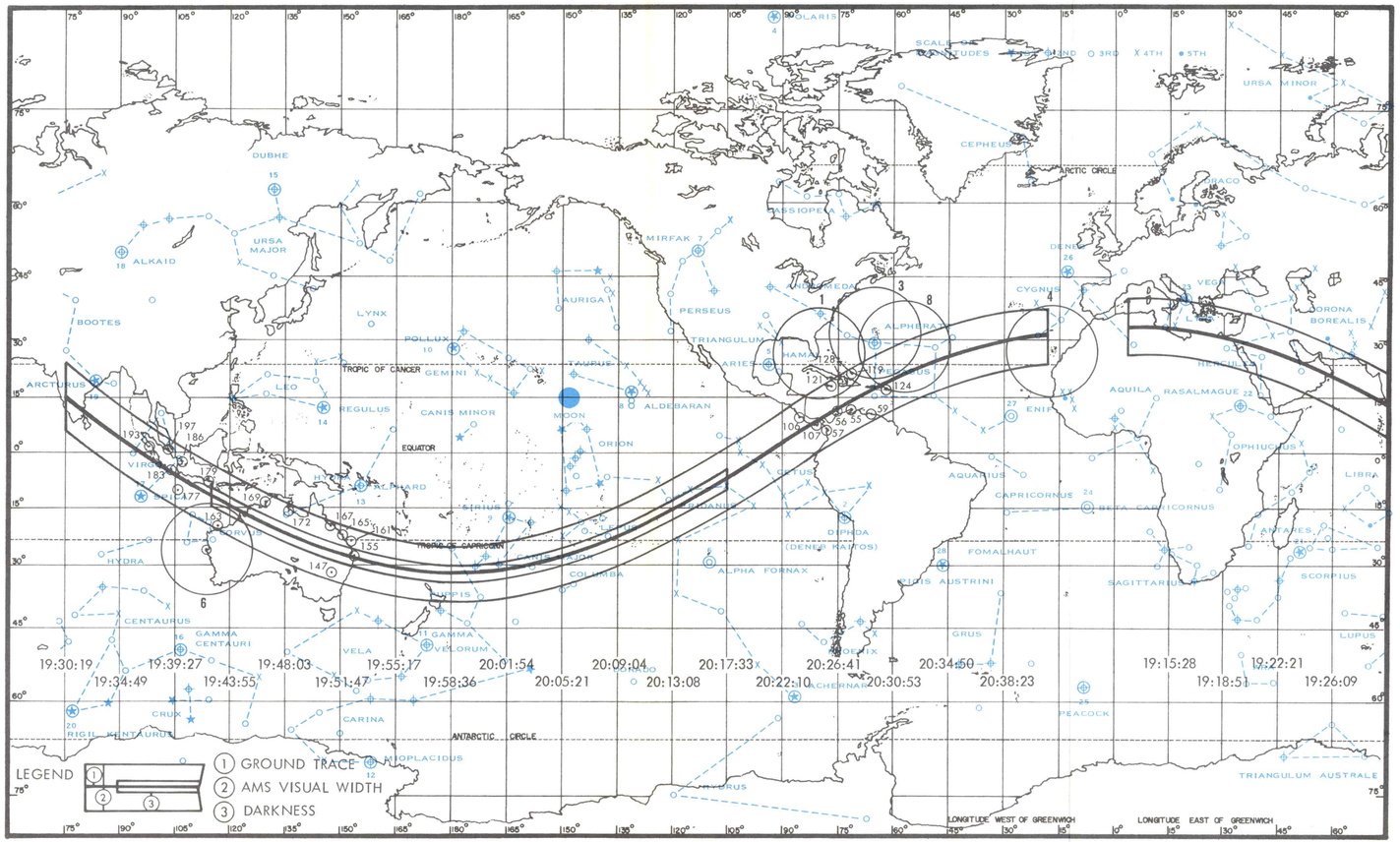

SM-6T-2-02-513

Figure 3-17. Navigation Reference Data, Orbit 14

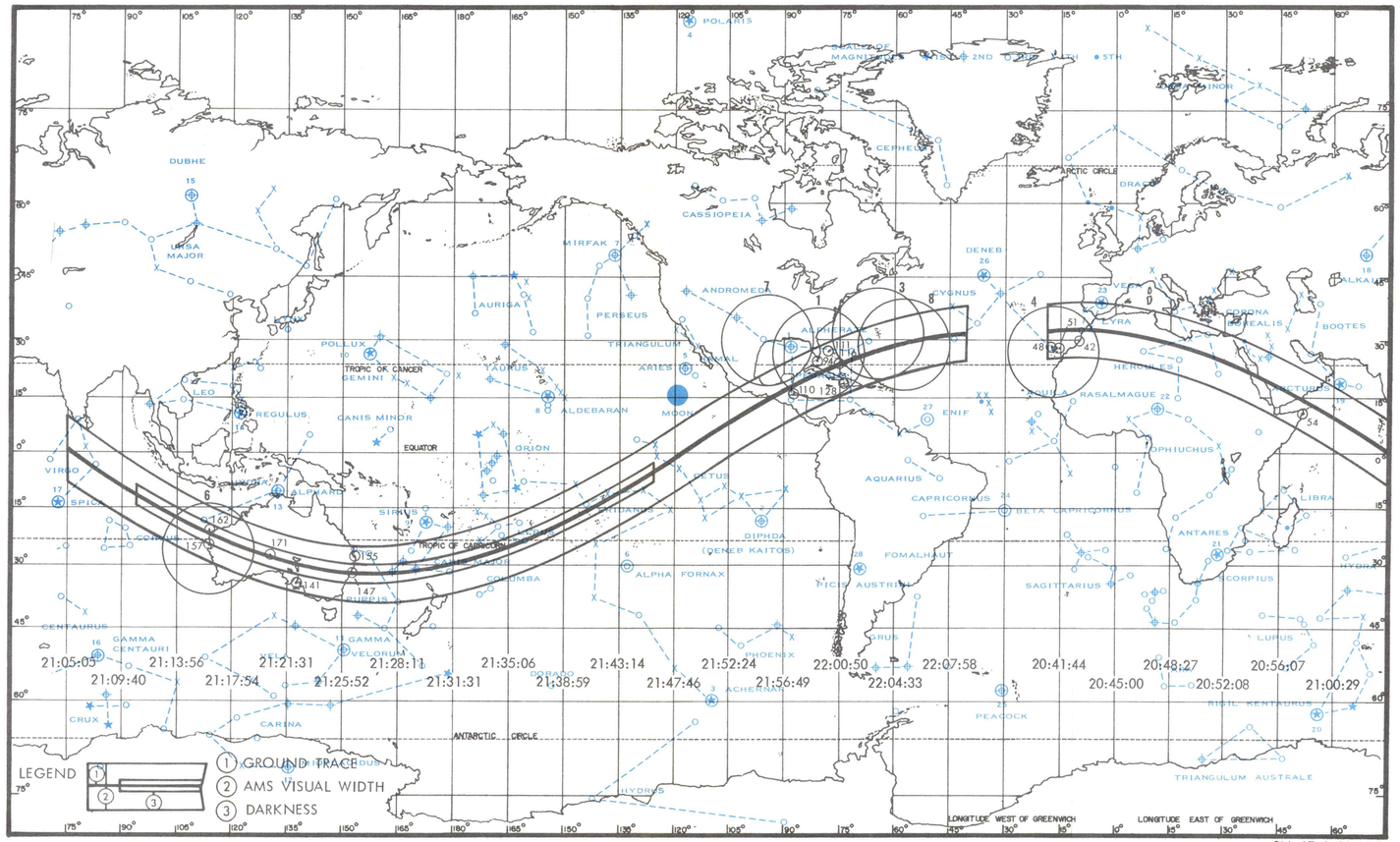

SM-6T-2-02-514

Figure 3-18. Navigation Reference Data, Orbit 15

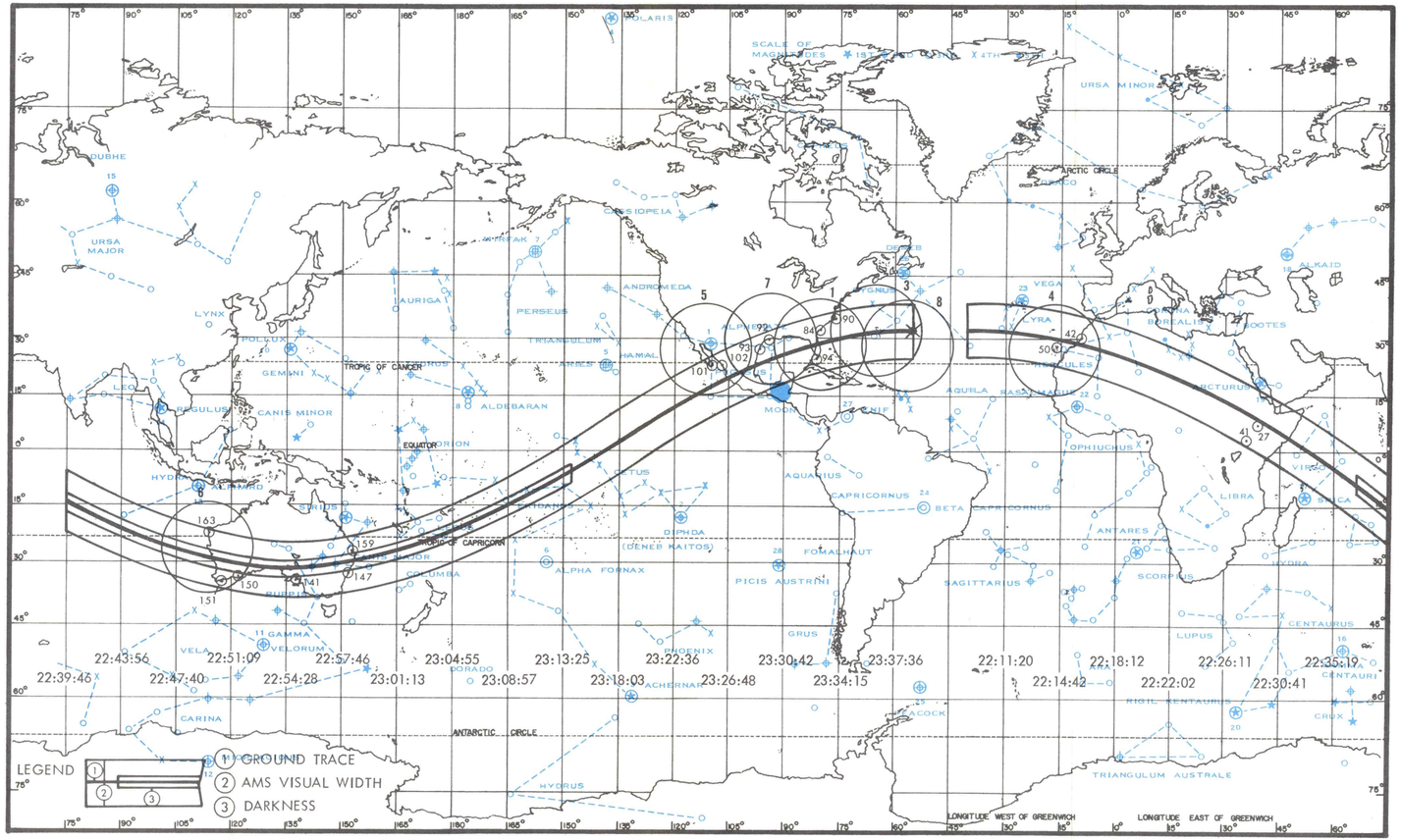

SM-6T-2-02-515

Figure 3-19. Navigation Reference Data, Orbit 16

3.2.1.4 Retrograde, Entry, and Recovery.

Mission 204A retrofire and entry are accomplished from an elliptical orbit approaching from the southwest toward a recovery site southeast of Hawaii. The direction and location of the entry are a function of the cumulative orbital displacement throughout the mission. In the nominal training mission of three orbits, the orbital displacement is such that the direction very loosely approximates Mission 204A but intersects a recovery site that is northeast (rather than southeast) of Hawaii. The nominal mission entry is accomplished from a 105 n mi circular orbit. Velocity, altitude, and surface range data are shown with respect to time from retro in figure 3-20. Figure 3-21 illustrates the ground trace for the nominal training mission entry. Data presented is for G&N mode of entry.

In addition to the basic nominal mission entry data, graphics for a number of other entry trajectories to be practiced on the AMS have been included in this section of the handbook. Those entry trajectories for which descriptive data has been provided are listed in table 3-6 (figures 3-22 through 3-36). During Atlantic Range recoveries, either the Insertion Ship, Bermuda, or KSC are used as the simulated "Re-entry Ship."

Table 3-6. Directory of Entry Data

Orbital Characteristics	Range	Orbit	Mode	Dynamics Data	Geographic Data	Remarks
Mission 204A (retro at perigee)	Pacific (off Hawaii)	225	SPS		Fig. 3-21	
Mission 204A (retro at perigee)	Atlantic (off Bermuda)	225	RCS		Fig. 3-22	
Mission 204A (retro at apogee)	Pacific (off Hawaii)	225	RCS		Fig. 3-23	
105-n mi circular	Pacific (off Hawaii)	3	SPS	Fig. 3-20	Fig. 3-24	Recovery from nominal training mission
105-n mi circular	Atlantic (off Bermuda)	3	SPS	Fig. 3-20	Fig. 3-25	Alternate recovery from nominal training mission
105-n mi circular	Atlantic (off Bermuda)	16	SPS	Fig. 3-20	Fig. 3-26	
105-n mi circular	Pacific (off Hawaii)	3	RCS	Fig. 3-27	Fig. 3-28	Alternate recovery from nominal training mission
130-n mi circular	Pacific (off Hawaii)	3	SPS	Fig. 3-29	Fig. 3-30	Variation in nominal training mission
105/130-n mi elliptical (retro at perigee)	Pacific (off Hawaii)	3	SPS	Fig. 3-31	Fig. 3-32	Variation in nominal training mission
105/130-n mi elliptical (retro at perigee)	Atlantic (off Bermuda)	3	RCS	Fig. 3-33	Fig. 3-34	Variation in nominal training mission
105/130-n mi elliptical (retro at apogee)	Pacific (off Hawaii)	3	RCS	Fig. 3-35	Fig. 3-36	Variation in nominal training mission

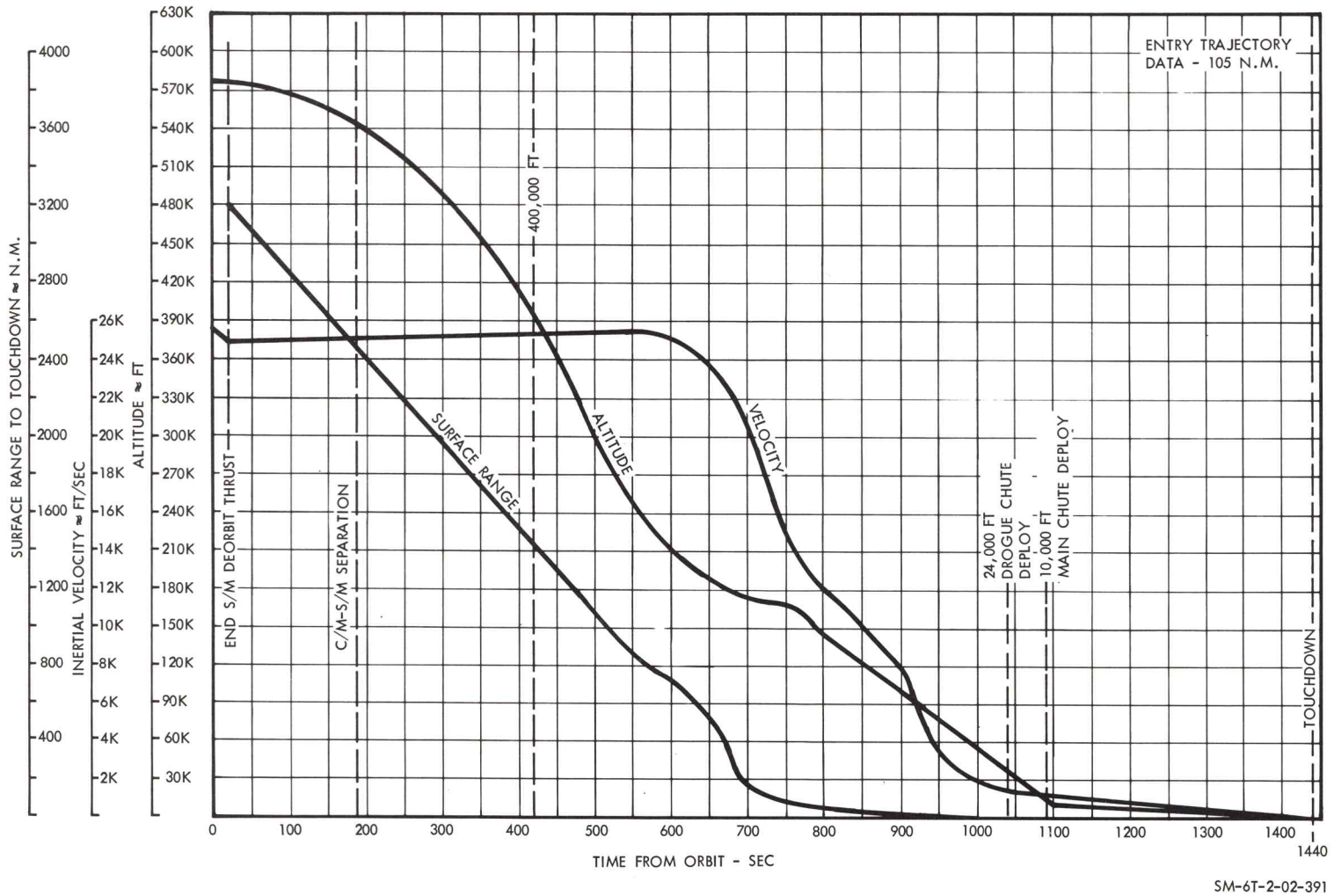

Figure 3-20. Entry Dynamics From 105-N Mi Circular Orbit (SPS Retro)

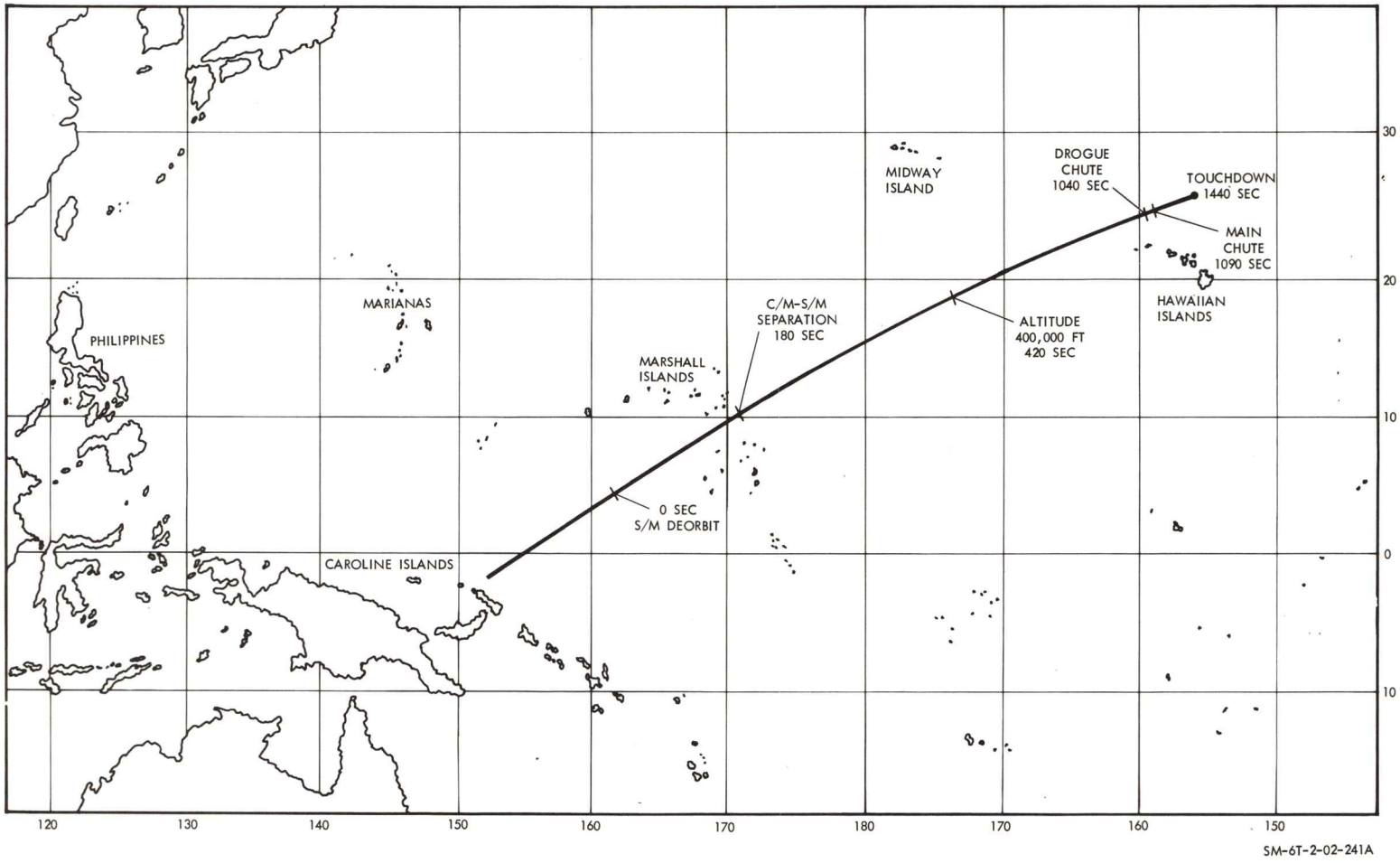

Figure 3-21. Geographic Data, Mission 204A, SPS Retro to Recovery off Hawaii

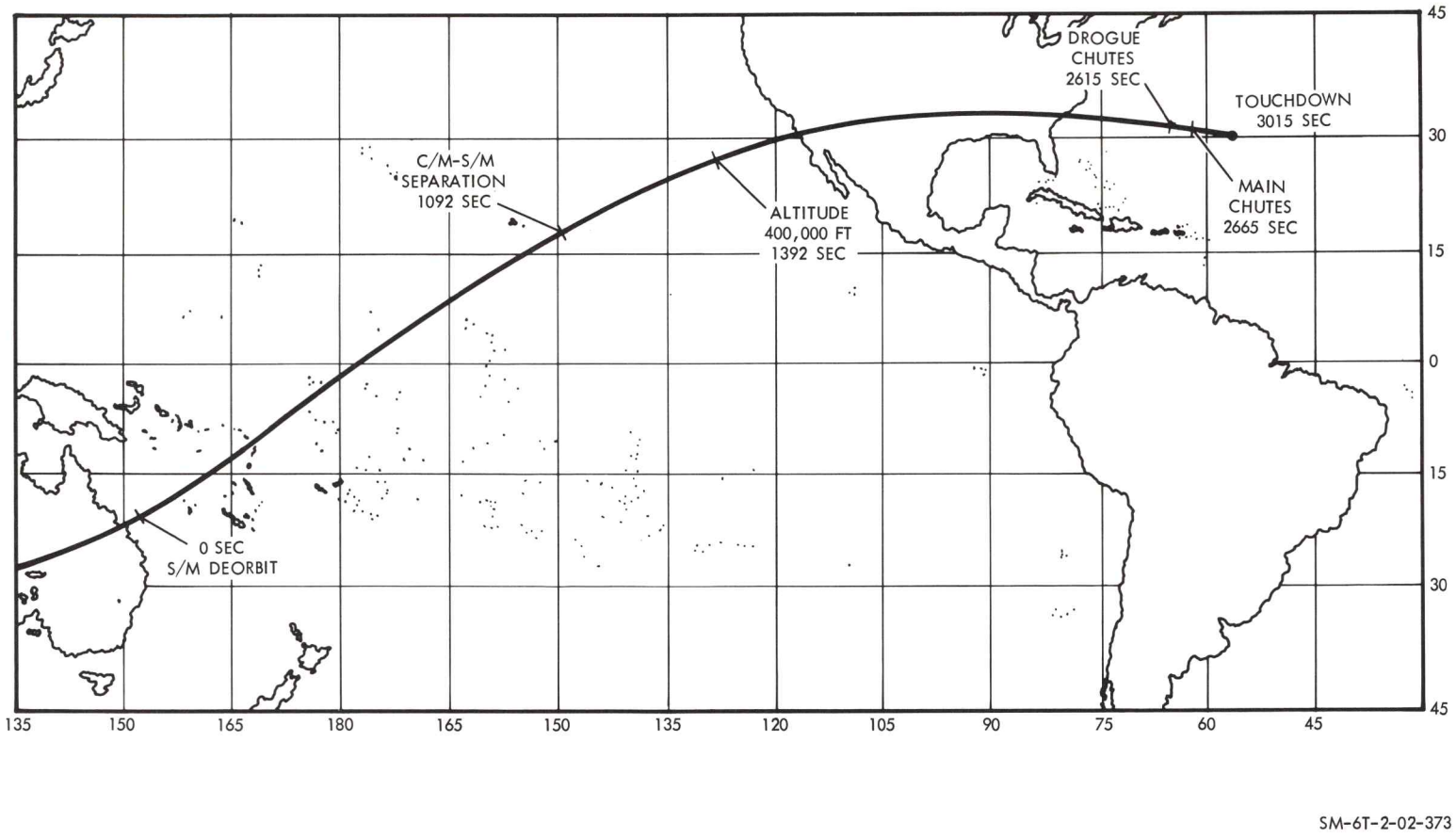

Figure 3-22. Geographic Data, Mission 204A, RCS Retro to Recovery off Bermuda

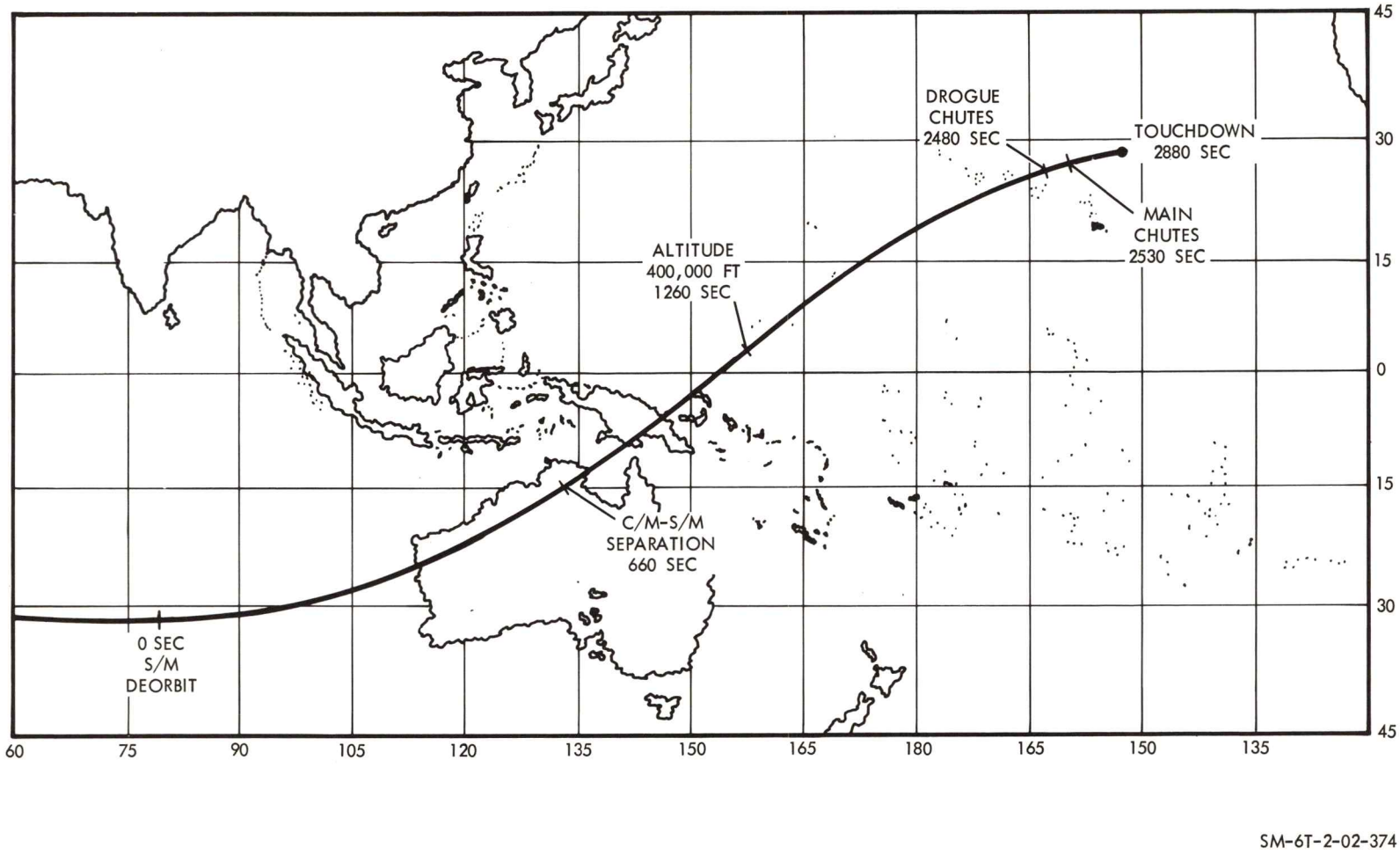

Figure 3-23. Geographic Data, Mission 204A, RCS Retro to Recovery off Hawaii

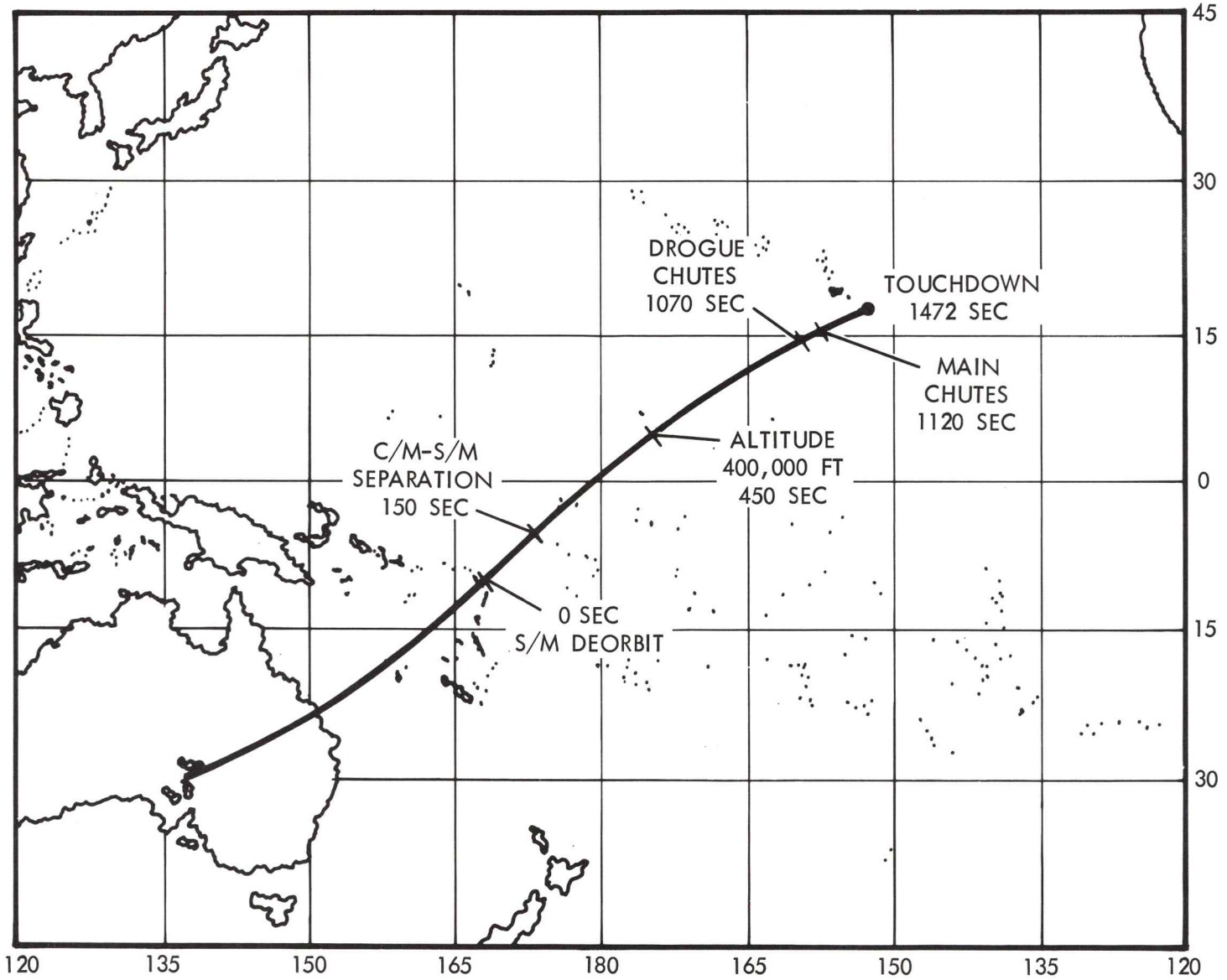

SM-6T-2-02-372

Figure 3-24. Geographic Data, Pacific Range Recovery From 105-N Mi Circular Orbit (SPS Retro) - Nominal Mission

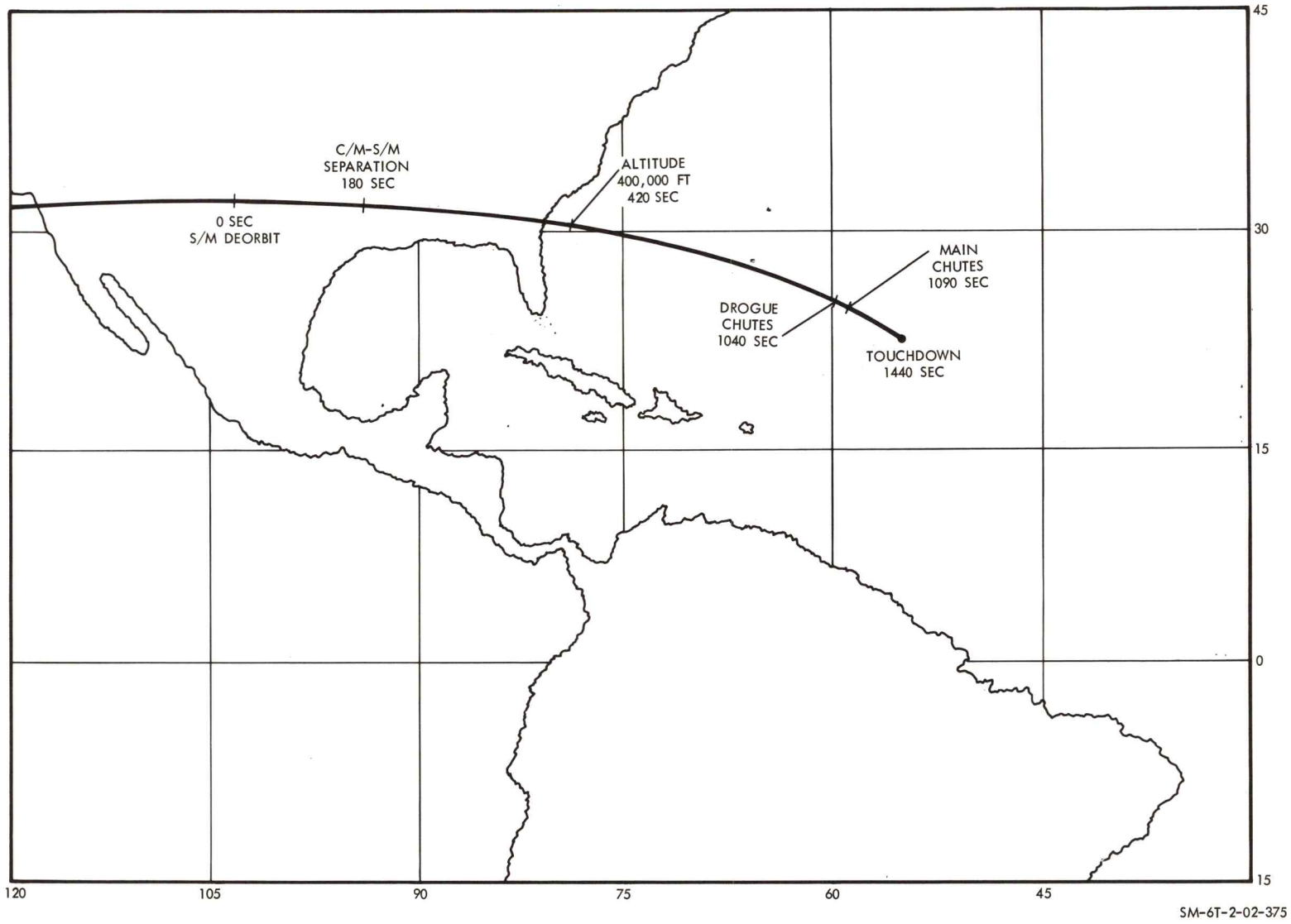

Figure 3-25. Geographic Data, Atlantic Range Recovery From 105-N Mi Circular Orbit (SPS Retro) - Nominal Mission

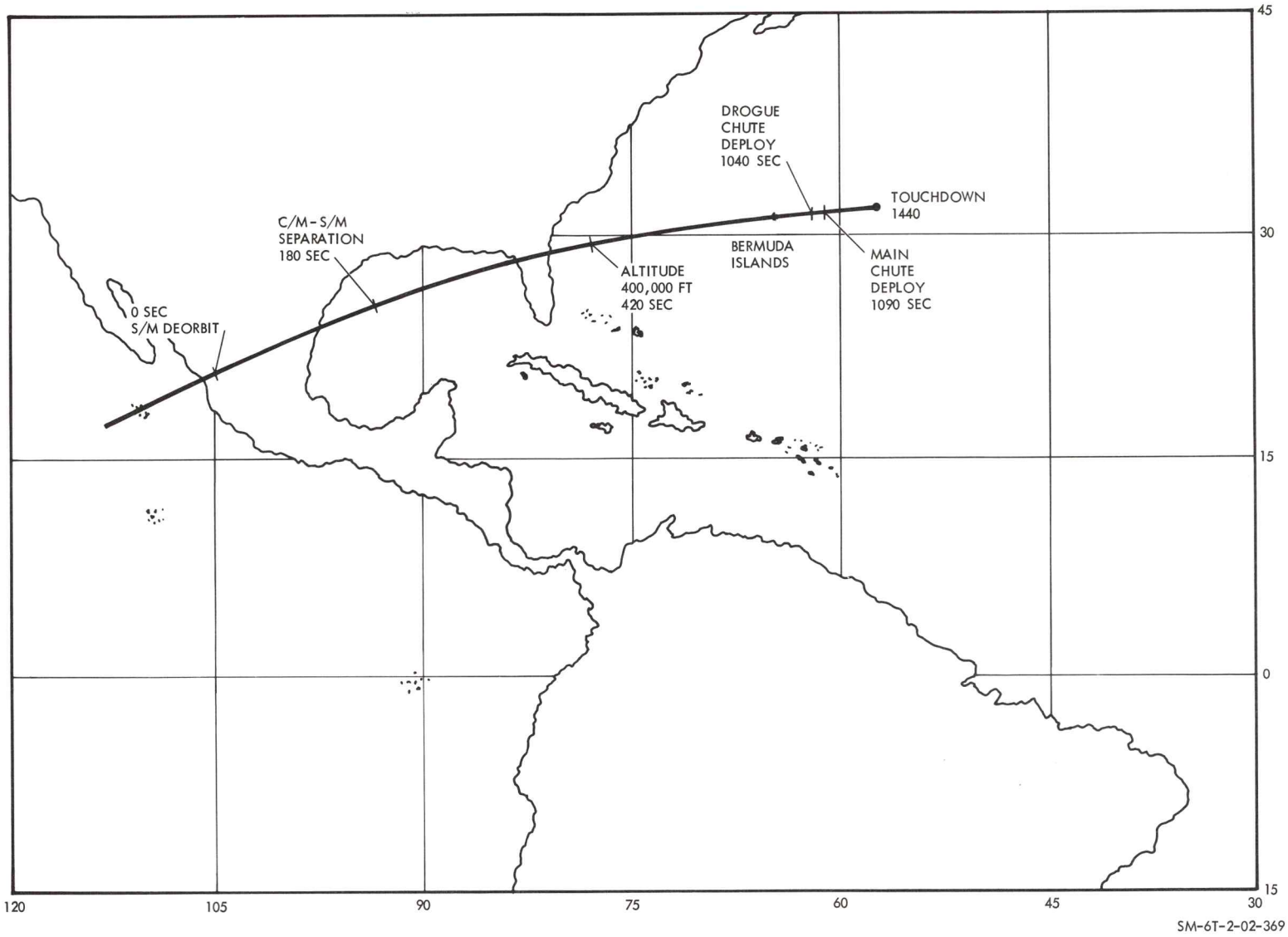

Figure 3-26. Geographic Data, Atlantic Range Recovery From 105-N Mi Circular Orbit (SPS Retro) - 16th Orbit

NOTE

The following figures are referenced in the text of this section of the handbook but have not been provided due to a lack of data at the time of publication.

Figure 3-27. Entry Dynamics From 105-N Mi Circular Orbit (RCS Retro)

Figure 3-28. Geographic Data, Pacific Range Recovery From 105-N Mi Circular Orbit (RCS Retro) - Nominal Training Mission

Figure 3-29. Entry Dynamics From 130-N Mi Circular Orbit (SPS Retro)

Figure 3-30. Geographic Data, Pacific Range Recovery From 130-N Mi Circular Orbit (SPS Retro) - Nominal Training Mission

Figure 3-31. Entry Dynamics From Perigee of 105/130-N Mi Orbit (SPS Retro) - Nominal Training Mission

Figure 3-32. Geographic Data, Pacific Range Recovery From 105/130-N Mi Elliptical Orbit (SPS Retro) - Nominal Training Mission

Figure 3-33. Entry Dynamics Data From Perigee of 105/130-N Mi Orbit (RCS Retro) - Nominal Training Mission

Figure 3-34. Geographic Data, Atlantic Range Recovery From 105/130-N Mi Elliptical Orbit (RCS Retro) - Nominal Training Mission

Figure 3-35. Entry Dynamics From Apogee of 105/130-N Mi Orbit (RCS Retro) - Nominal Training Mission

Figure 3-36. Geographic Data, Pacific Range Recovery From 105/130-N Mi Elliptical Orbit (RCS Retro) - Nominal Training Mission

Figures 3-27 Through 3-36, Inclusive

3.2.1.5 Simulation Initialization.

The SE 012 modification, as defined by the simulation subcontractor, includes a capability to initialize the simulator at five different points in Mission 204A. These are as follows:

- Launch time minus 60 seconds
- Launch
- Orbit insertion
- 246 hours (re: MSC Note 65-FM-58)
- 3 orbits prior to deorbit (re: MSC Note 65-FM-58)

In preparing the nominal training mission and AMS syllabus of training sessions, it has been concluded that the five points presently defined are completely inadequate for effective training. However, such deficiency is not prohibitive, since it is possible to prepare additional initialization points by "flying" the simulator to preselected points, exercising the "store" function, and transcribing the stored data off-line. The data transcribed in this fashion can be used to initialize at the preselected point without a reiteration of the preceding mission history.

Since the initialization points available in the delivered AMS are inadequate for training, a suggested list of those points that would be useful in training has been included as table 3-7 of this section of the handbook. The points listed would be prepared by means of the "store" function as previously explained. The inventory of initialization points would be prepared in three steps as explained in the following paragraphs.

Points S1 through S13 are with respect to the nominal training mission. The alphabetic suffixes identify different orbital characteristics for common time/geographic positions. The nominal mission initiation points would be prepared by flying mission plans A, B, and C in their entirety, exercising the store function as required.

Points S101 through S113 are suggested for the remaining 16 orbits of the MEP film. The points would be developed by flying nominal mission plan C (Hohmann transfers) to provide a mission history of delta V activity and propellant expenditure and the continuing on into orbits 4 through 16 exercising the store function as required. The continuation of the nominal mission would be in a 105-n mi circular orbit to retrofire in the 16th orbit and recovery in the Atlantic Range (off Bermuda). The newly prepared S112 will then be used to initialize for purposes of preparing an initialization point for retro and entry at 16 orbits from the elliptical orbit (S116). The elliptical orbit will be accomplished by use of the procedures for the first Hohmann transfer delta V in the nominal training mission during the 15th orbit.

Initialization points S201 through S211 are with reference to the operational Mission 204A as defined in MSC Note 65-FM-58. It should be noted that points S201 through S211 are described in terms of revolutions with respect to the earth's surface, rather than orbits around the earth's center.

Initialization points S201 through S204 relate to the first five delta V events in Mission 204A. If initialization at these points is required, initialization points can be prepared by flying Mission 204A through the first five delta V events and exercising the store function. However, it should be noted that preparation of S201 requires 27 hours of simulated real time, and preparation of S201 through S204 requires 89 hours. It should be further noted that the first five delta V events in Mission 204A are closely approximated in the three-orbit nominal training mission. For these reasons, S201 through S204 have been adjudged as not required for training purposes and have not been used in the syllabus of training sessions.

Initiation points S205 and S206 are those already defined for the AMS at 246 hours and three orbits prior to deorbit. Points S207 through S211 can be prepared by initializing at S206 and exercising the store function in conjunction with appropriate crew procedures.

Table 3-7. Initialization Data

No.	Title and Description	Call-Up	Simulated Time-GMT and Mission	Position	
				Long.	Lat
S1	Prelaunch. Just prior to final controls and displays checklist before launch. Point is used to train in final preparations for launch. Initialization is accomplished by initializing at S2 and placing the simulator in HOLD until prelaunch procedures are complete. Simulation is not authentic in two respects. The first is that on-board expendables depletion and system contamination do not accumulate as a function of time. The second is that the simulated launch time does not vary as a function of duration of the prelaunch phase.		(T - 15 min)	80.47°W	28.37°N
S2	Launch. Preparations for launch complete. Ignition is impending 60 seconds after initialization. This start point is used to initiate launch phase simulation, all simulations starting with launch and continuing into orbit, and all launches terminating in suborbital abort.		(T - 60 sec)	80.47°W	28.37°N
S3	Orbit Insertion. Immediately after S-IVB cutoff. The initialization point is intended for training sessions when initial earth orbital procedures are involved. A short duration step-ahead from S3 to off the west coast of Africa can be used to initiate first orbit navigation with African landmarks.		(1) 14:10:02 GMT (00:10:02)	62.92°W	31.41°N
S4	Delta V. Off the east coast of Madagascar during the first orbit with daylight illumination. Point is used to initiate IMU alignment, orbit measurement, and delta V at the Pacific orbital equinox. Delta V may be for plane change or first firing of Hohmann transfer. S-IVB is separated.		14:40:02 GMT (0:40:00)	50.35°W	13.02°S
S5A	U.S. - First Orbit. Off the west coast of the U.S. during the first orbit in 105-n mi circular orbit. Point is used to initiate navigation with U.S. landmarks. S-IVB is separated.		15:30:00 GMT (1:30:00)	119.08°W	23.88°N
S5B	Transposition and Docking. Off the west coast of the U.S. during first orbit in 105-n mi circular orbit. Point is used to initiate S/M-C/M transposition and docking with S-IVB. S-IVB has not been separated at time of initiation.		15:30:00 GMT (1:30:00)	119.08°W	23.88°N
S5C	U.S. - Elliptical Orbit. Off the west coast of the U.S. during the first orbit in 105-130-n mi elliptical orbit. Used to initiate training sessions involving elliptical orbit. S-IVB is separated.		15:30:00 GMT (1:30:00)	119.08°W	23.88°N
S6	Africa-Second Orbit. Off the west coast of Africa during the second orbit in 105-n mi circular orbit. Point is used to initiate navigation with African landmarks and/or IMU alignment. S-IVB is separated.		15:50:00 GMT (1:50:00)	33.44°W	23.01°N
S7A	Australia - Second Orbit. Off the west coast of Australia during the second orbit in 105-n mi circular orbit with daylight illumination. Point is used to initiate navigation with Australian and SW Pacific landmarks. S-IVB is separated.		16:25:00 GMT (2:25:00)	97.42°E	31.53°S
S7B	High Altitude Orbit. Off the west coast of Africa with either day or night illumination in 130-n mi circular orbit (second orbit of nominal mission). Point is used to initiate training sessions in 130-n mi circular orbit. S-IVB is separated.		16:25:00 GMT (2:25:00)	97.42°E	31.53°S
S8	U.S. - Second Orbit. Off the west coast of the U.S. in the second orbit of the 105-n mi circular orbit. Point is used for navigation with U.S. landmarks. Point is also used for initiating final orbital measurement, IMU alignment, and RCS retrograde to the Pacific range.		17:00:00 GMT (3:00:00)	133.33°W	26.72°N

Table 3-7. Initialization Data (Cont)

No.	Title and Description	Call-Up	Simulated Time-GMT and Mission	Position	
				Long.	Lat
S9A	Final Orbit (105 N Mi). Off the west coast of Africa in the third orbit of 105-n mi circular orbit. Point is used for final orbital measurement, IMU alignment, and SPS retrograde to the Pacific range.		17:35:00 GMT (3:35:00)	1.98°E	11.29°S
S9B	Final Orbit (130 N Mi). Off the west coast of Africa in 130-n mi circular orbit (third orbit of nominal mission). Point is used for final orbital measurement, IMU alignment, and SPS retrograde to the Pacific range.		17:35:00 GMT (3:35:00)	1.98°E	11.29°S
S9C	Final Orbit (105/130 N Mi). Off the west coast of Africa in the third orbit of the 105/130-n mi elliptical orbit variation of the nominal mission. Point is used for initiating procedures for final orbital measurement, IMU alignment, retrograde, and entry.		17:35:00 GMT (3:35:00)	1.98°E	11.29°S
S9D	Preparation for RCS Retro. Off the west coast of Africa in the third orbit of 105-n mi circular orbit. Point is used for initiating preparation for and accomplishment of RCS retrograde.		17:35:00 GMT (3:35:00)	1.98°E	11.29°S
S10A	Preparation for SPS Retro (105 N Mi). East of Australia in 105-n mi circular orbit (third orbit of nominal mission). Point is used for initiating preparation for and accomplishment of SPS retrograde.		18:00:00 GMT (4:00:00)	105.56°E	25.69°S
S10B	Preparation for SPS Retro (130 N Mi). East of Australia in 130-n mi circular orbit (third orbit of nominal mission). Point is used for initiating preparation for and accomplishment of SPS retrograde.		18:00:00 GMT (4:00:00)	105.56°E	25.69°S
S10C	Preparation for SPS Retro (105/130 N Mi). East of Australia in 105/130-n mi elliptical orbit (third orbit of nominal mission). Point is used for initiating preparation for and accomplishment of SPS retrograde.		18:00:00 GMT (4:00:00)	105.56°E	25.69°S
S11	Entry from RCS Retro. Over New Guinea in 105-n mi circular orbit (third orbit of nominal mission). Point is used for initiating preparation for and accomplishment of entry from RCS retro. S/M is separated.		18:10:00 GMT (4:10:00)	141.69°E	7.59°S
S12	Post-Retro (105 N Mi). Immediately after thrust cutoff for retro from 105-n mi circular orbit (third orbit of nominal training mission). Point is used to initiate training in procedures for S/M-C/M separation and entry. S/M has not been separated at time of initiation.		18:15:00 GMT (4:15:00)	157.94°E	3.12°N
S13A	Entry (from 105-N Mi Circular). After S/M-C/M separation during descent from 105-n mi circular orbit. Point is used for training in entry procedures.		18:20:00 GMT (4:20:00)	174.52°E	13.52°N
S13B	Entry (from 130-N Mi Circular). After S/M-C/M separation during descent from 130-n mi circular orbit. Point is used for training in entry procedures.		18:20:00 GMT (4:20:00)	174.52°E	13.52°N
S13C	Entry (from 105/130-N Mi Elliptical). After S/M-C/M separation during descent from 105/130-n mi elliptical orbit. Point is used for training in entry procedures.		18:20:00 GMT (4:20:00)	174.52°E	13.52°N
S101	Start of fourth orbit		18:34:02 GMT (4:34:02)	129.54°W	31.47°N
S102	Start of fifth orbit		20:02:02 GMT (6:02:02)	151.74°W	31.49°N

Table 3-7. Initialization Data (Cont)

No.	Title and Description	Call-Up	Simulated Time-GMT and Mission	Position	
				Long.	Lat
S103	Start of sixth orbit		21:30:02 GMT (7:30:02)	173.95°W	31.52°N
S104	Start of seventh orbit		22:58:02 GMT (8:58:02)	163.85°E	31.53°N
S105	Start of eighth orbit		(2) 00:26:02 GMT (10:26:02)	141.65°E	31.55°N
S106	Start of ninth orbit		01:54:02 GMT (11:54:02)	119.46°E	31.56°N
S107	Start of tenth orbit		03:22:02 GMT (13:22:02)	97.26°E	31.58°N
S108	Start of 11th orbit		04:50:02 GMT (14:50:02)	75.06°E	31.59°N
S109	Start of 12th orbit		06:18:02 GMT (16:18:02)	52.87°E	31.61°N
S110	Start of 13th orbit		07:43:02 GMT (17:43:02)	30.68°E	31.62°N
S111	Start of 14th orbit		09:14:02 GMT (19:14:02)	84.88°E	31.63°N
S112	Start of 15th orbit		10:42:02 GMT (20:42:02)	137.03°W	31.64°N
S113	Start of 16th orbit		12:10:02 GMT (22:10:02)	35.89°W	31.65°N
S114	Preparation for RCS Retro at 16 Orbits. Off the east coast of Australia in 105-n mi circular orbit. Point is used for initiating preparation for and accomplishment of RCS retrograde to Atlantic recovery area.		12:47:02 GMT (22:47:40)	105°E	28°S
S115	Preparation for SPS Retro at 16 Orbits (Circular). Over SW Pacific in 105-n mi circular orbit. Point is used to initiate preparation for and accomplishment of retrograde to Atlantic recovery area.		13:08:57 GMT (23:08:57)	165°W	15°S
S116	Preparation for SPS Retro at 16 Orbits (Elliptical). Over SW Pacific in 105/130-n mi elliptical orbit. Point is used to initiate preparation for and accomplishment of retrograde to Atlantic recovery area.		13:08:57 GMT (08:57)	165°W	15°S
S201	Mission 204A, Preparation for First Burn. After east coast of Australia during the 17th revolution (17th orbit) of Mission 204A. Point is used to initiate preparations for (including navigation and IMU alignment) and accomplishment of first SPS firing during 18th revolution.		16:04:01 GMT (26:04:01)	150°E	16°S
S202	Mission 204A, Hohmann Transfer. After Hawaii during the 20th revolution (21st orbit) of Mission 204A. Point is used to initiate preparations for (including navigation and IMU alignment) and accomplishment of Hohmann transfer; involves second and third SPS firings in the 21st revolution. (Hohmann transfer)		20:47:35 GMT (30:47:35)	148°W	23°N
S203	Mission 204A, Fourth Burn. Off the east coast of Asia during the 38th revolution (40th orbit) of Mission 204A. Point is used to initiate preparations for (including navigation and IMU alignment) and accomplishment of fourth SPS firing in 39th revolution (plane change).		(4) 01:10:21 GMT (59:10:21)	128°E	32°N

Table 3-7. Initialization Data (Cont)

No.	Title and Description	Call-Up	Simulated Time-GMT and Mission	Position	
				Long.	Lat
S204	Mission 204A, Fifth Burn. Over New Guinea during the 56th revolution (59th orbit) of Mission 204A. Point is used to initiate preparations for (including navigation and IMU alignment) and accomplishment of fifth SPS firing in 57th revolution (plane change).		(5) 05:42:55 GMT (87:42:55)	137°E	2°N
S205	Mission 204A, Sixth and Seventh Burn. Before the west coast of South America at the beginning of the 156th revolution (168th orbit) of Mission 204A. Point is used to initiate preparations for and accomplishment of sixth SPS firing (change orbital altitude) in the 157th revolution (169th orbit) and seventh firing (reduce apogee) in the 158th revolution (170th orbit).		(11) 20:35:00 GMT (246:35:00)	80°W	28°S
S206	Final Phase, Mission 204A. At west coast of South America at the beginning of 207th revolution (222nd orbit) of Mission 204A. Point is used in initiating training in final phase of Mission 204A (including retrofire).		(15) 03:36:00 GMT (325:36:00)	80°W	5°S
S207	RCS Retro from Mission 204A (Pacific). Off west coast of Africa in 210th revolution (224th orbit) of Mission 204A. Point is used in preparation for accomplishment of RCS retrofire to the Pacific recovery area.		08:00:00 GMT (330:00:00)	35°W	29°N
S208	SPS Retro from Mission 204A (Pacific). Off west coast of Australia in 210th revolution (224th orbit) of Mission 204A. Point is used in preparation for and accomplishment of SPS retrofire to the Pacific recovery area.		08:23:00 GMT (330:23:00)	100°E	35°S
S209	RCS Retro from Mission 204A (Atlantic). Over Australia in 210th revolution (224th orbit) of Mission 204A. Point is used in preparation for and accomplishment of RCS retrofire to the Atlantic recovery area.		08:39:00 GMT (330:39:00)	135°E	28°S
S210	SPS Retro from Mission 204A (Atlantic). South of the Hawaiian Islands in the 210th revolution (224th orbit) of Mission 204A. Point is used in preparation for and accomplishment of SPS retrofire to the Atlantic recovery area.		08:51:00 GMT (330:51:00)	155°W	15°N
S211	Entry, Mission 204A. After S/M-C/M separation during descent to Pacific recovery area of Mission 204A. Point is used for training in entry procedures.		08:50:00 GMT (330:50:00)	177°E	2°S

3.2.2 BASIC NOMINAL MISSION (MISSION A).

The nominal training mission for the initial delivered configuration of the AMS is comprised of launch from KSC, approximately two and one-half orbits of space operations, retrograde, entry, and recovery north of Hawaii. Nominal orbital altitude and orbital angle of inclination are 105 n mi and 31.69 degrees, respectively.

Table 3-8 outlines the events for the nominal training mission including its planned variations. Geographic and time data correlating with table 3-8 is provided in figures 3-37, 3-38, and 3-39. Numbers circled in table 3-8 and figures 3-37 through 3-39 are the significant events of which the nominal training mission is comprised. Numbers in triangles in the figures are the initialization points defined in paragraph 3.2.1.5. Other numbers in the figures correspond to numbers in the first four columns in table 3-8 and identify crew activities and notes. Crew activities in the table are laid out with respect to time and geographic position across the top of the figures. The numbers identifying crew activities and notes contain no specific intelligence above and beyond establishing an event-activity sequence.

For purposes of simplicity and adaptability of the nominal mission to more than one launch-boost profile, the orbit start point has been arbitrarily established at a point subsequent to insertion. The point used as the start of each orbit has been the orbits northernmost point, or latitude 31.69 degrees north.

The first four columns of table 3-8 identify which events and activities are involved in the basic nominal mission and three planned variations. Mission A is the basic nominal mission discussed in this paragraph, and missions B and C are the plane change and Hohmann transfer variations, respectively, and mission D is the transposition and docking mission.

Crew activities for each of the four variations of the nominal training mission are also identified in the strip across the top of figures 3-37 through 3-39. The same code of A (basic mission), B (plane changes), C (Hohmann transfers), and D (transposition and docking) applies. Crew activity numbers in the figures are with direct reference to table 3-8. Cross-hatched areas are the time available for routine activities between mission events.

A brief outline of the basic nominal mission is provided as follows:

Mission Time (Hour:Minute)	Event-Activity
0	Launch-boost
0:10	Orbit insertion
0:12	Start first orbit
0:12	Programed S-IVB roll
0:15 to 0:20	Initial orbital procedures
0:20 to 0:40	Navigational sightings (Africa and Madagascar)
0:42	Program S-IVB roll
0:48 to 1:18	Coarse and fine align IMU and SCS

Mission Time (Hour:Minute)	Event-Activity
1:20	Program S-IVB roll
1:30	Jettison S-IVB
1:30 to 2:25	Initiate two-man extended mission procedures
1:30 to 1:40	Landmark sightings (Mexican and U.S.)
1:40	Start second orbit
Optional	
1:52 to 2:14	Navigational sightings (Africa)
2:15	Begin minimum activity operations
2:25	Terminate minimum activity
2:25 to 2:56	Coarse and fine align IMU
2:25	Terminate two-man extended mission procedures
3:01	Navigational sightings (Mexican and U.S.)
3:08	Start third orbit
3:50 to 4:00	Fine align IMU and SCS
4:00 to 4:15	Preparation for retrofire
4:16	Retrofire
4:16 to 4:19	Preparation for C/M-S/M separation
4:19	C/M-S/M separation
4:19 to 4:23	Preparation for entry
4:23 to 4:40	Entry and descent
4:40	Touchdown

3.2.3 NOMINAL MISSION, PLANE CHANGES (MISSION B).

Mission 204A has three plane changes during the 18th, 39th, and 57th orbits. The nominal training mission includes two plane changes, both at the orbital equinox. The initial plane change is -1 degree at the Pacific equinox of the first orbit. The second change is at the Pacific equinox of the second orbit. The second change is +1 degree and returns the orbit to an inclination of 31.69 degrees. A brief outline of the plane change variation of the nominal training mission is as follows:

Mission Time (Hour:Minute)	Event-Activity
0	Launch-boost
0:10	Orbit insertion
0:12	Start first orbit
0:15	Jettison S-IVB
0:15 to 0:20	Initial orbital procedures
0:20 to 0:40	Navigational sighting (Africa and Madagascar)
before 0:40	Inhibit day terminator (Australia and SW Pacific)
0:40 to 0:50	Fine align IMU and SCS
0:55 to 1:11	Navigational sightings (Australia and SW Pacific)
1:11 to 1:16	Preparation for delta V
1:17	Delta V (plane change -1 degree to 30.69 degrees inclination)
1:19 to 1:29	Fine align IMU and SCS

Mission Time (Hour:Minute)	Event-Activity
1:30 to 1:40	Navigational sightings (Mexico and U.S.)
1:40	Start second orbit
1:52 to 2:14	Navigational sightings (Africa and Madagascar)
2:30 to 2:40	Fine align IMU and SCS
2:40 to 2:45	Preparation for delta V
2:45	Delta V (plane change, +1 degree to 31.69 degrees inclination)
2:46 to 2:56	Fine align IMU and SCS
3:01 to 3:13	Navigational sightings (Mexico and U.S.)
3:08	Start third orbit
3:50 to 4:00	Fine align and SCS
4:00 to 4:15	Preparation for retrofire
4:16	Retrofire
4:16 to 4:19	Preparation for C/M-S/M separation
4:19	C/M-S/M separation
4:19 to 4:23	Preparation for entry
4:23 to 4:40	Entry and descent
4:40	Touchdown

3.2.4 NOMINAL MISSION, HOHMANN TRANSFERS (MISSION C).

Mission 204A entails a Hohmann transfer from 105 to 130 n mi in the 21st orbit and two additional orbital altitude changes in the 157th and 158th orbits. The nominal training mission also includes four delta Vs for purposes of changing orbital altitude. The four SPS firings are used to accomplish a Hohmann transfer from 105- to 130-n mi circular orbit and another Hohmann transfer from 130- to 105-n mi circular orbit. A brief outline of that mission is provided as follows:

Mission Time (Hour:Minute)	Event-Activity
0	Launch-boost
0:10	Orbit insertion
0:12	Start first orbit
0:15	Jettison S-IVB
0:15 to 0:20	Initial orbital procedures
0:20 to 0:40	Navigational sightings (Africa and Madagascar)
before 0:40	Inhibit day terminator (Australia and SW Pacific)
0:40 to 0:50	Fine align IMU and SCS
0:55 to 1:11	Navigational sightings (Australia and SW Pacific)
1:11 to 1:16	Preparation for delta V
1:17	Delta V (initiate Hohmann transfer from 105 to 130 n mi)
1:19 to 1:29	Fine align IMU and SCS
1:30 to 1:40	Navigational sightings (Mexico and U.S.)
1:40	Start second orbit
1:40 to 1:50	Fine align IMU and SCS
1:57 to 2:02	Preparation for delta V

Mission Time (Hour:Minute)	Event-Activity
before 2:10	Inhibit day terminator
2:02	Delta V (circularize at 130 n mi)
2:03 to 2:13	Fine align IMU and SCS
2:25 to 2:35	Navigation sightings (Australia and SW Pacific)
2:40 to 2:45	Preparation for delta V
2:45	Delta V (initiate Hohmann transfer from 130 to 105 n mi)
2:46 to 2:56	Fine align IMU and SCS
3:01 to 3:13	Navigational sightings (Mexico and U.S.)
3:08	Start third orbit
3:25 to 3:30	Preparation for delta V
3:30	Delta V (circularize orbit at 105 n mi)
before 3:34	Inhibit day terminator
3:36 to 3:47	Navigational sightings (Africa and Madagascar)
3:50 to 4:00	Fine align IMU and SCS
4:00 to 4:15	Preparation for retrofire
4:16	Retrofire
4:16 to 4:19	Preparation for C/M-S/M separation
4:19	C/M-S/M separation
4:19 to 4:23	Preparation for entry
4:23 to 4:40	Entry and descent
4:40	Touchdown

3.2.5 NOMINAL MISSION, TRANSPOSITION AND DOCKING (MISSION D).

Mission 204A includes practice in transposing the C/M to a position facing the separated S-IVB. The exercise comprises a partial in-flight simulation of the transposition and docking technique to be used in the ultimate lunar mission. Practice of these procedures is the subject of the fourth variation of the nominal training mission. A brief outline of that mission is provided as follows:

Mission Time (Hour:Minute)	Event-Activity
0	Launch-boost
0:10	Orbit insertion
0:12	Start first orbit
0:12	Programed S-IVB roll
0:15 to 0:20	Initial orbit procedures
0:20 to 0:40	Navigational sightings (Africa and Madagascar)
0:42	Programed S-IVB roll
0:48 to 1:08	Coarse align IMU
1:08 to 1:18	Fine align IMU and SCS
1:20	Programed S-IVB roll
1:30	Jettison S-IVB
1:30 to 2:25	Transposition and docking
1:40	Start second orbit

Mission Time (Hour:Minute)	Event-Activity
2:25	Secure from transposition and docking
2:30 to 2:45	Star/lunar landmarks navigation
2:46 to 2:56	Fine align IMU and SCS
3:01 to 3:13	Navigational sightings (Mexico and U.S.)
3:08	Start third orbit
3:50 to 4:00	Fine align IMU and SCS
4:00 to 4:15	Preparation for retrofire
4:16	Retrofire
4:16 to 4:19	Preparation for C/M-S/M separation
4:19 to 4:23	Preparation for entry
4:23 to 4:40	Entry and descent
4:40	Touchdown

Table 3-8. Nominal Training Mission

Number-Mission				Mission Event	Crew Activity and Notes	GMT and Mission Time	Geographic Position
A	B	C	D				
①	①	①	①	Launch Boost Launch site - KSC Azimuth - 72° Boost duration 0:10:02 min.	Monitor Boost	Oct. 1, 1966 14:00:00 GMT	80.47° W, 28.39° N
②	②	②	②	Orbit Insertion Altitude - 105 n mi Inclination - 31.42° Orbit duration - 88 min/orbit		14:10:02 GMT (0:10:02)	
③	③	③	③	Start First Orbit	Confirm with MSFN	14:12:02 GMT (0:12:02)	53.91° W, 31.69° N
3.1	NA	NA	3.1	Programed S-IVB Roll		14:12:30 GMT (0:12:30)	
NA	④	④	NA	Jettison S-IVB	Monitor Jettison	14:15:00 GMT (0:15:00)	
4.1	4.1	4.1	4.1		Initial Orbital Procedures Four to 5 minutes of system setup and checks	Approx (0:15:00) to (0:20:00)	
4.2	4.2	4.2	4.2		Navigation Sightings Measure orbit with African and Madagascar landmarks. Approx 20 minutes of landmark availability	Approx (0:20:00) to (0:40:00)	Approx 25° W to 50° E
NA	4.3	4.3	NA	Inhibit Day Terminator Prevent day-night terminator initiation	Permits landmark sightings over Australia and the SW Pacific	Before (0:40:00)	Before 55° E
4.4	NA	NA	4.4	Programed S-IVB Roll		(0:42:00)	
4.5	NA	NA	4.5		Coarse Align IMU Approx 20 minutes of crew procedures	Approx (0:48:00) to (1:08:00)	Approx 80° E to 165° E
4.6	4.6	4.6	4.6		Fine Align IMU and SCS Approx 10 minutes of crew procedures	Mission A&D Approx (1:08:00) to (1:18:00) Mission B&C Approx (0:40:00) to (0:50:00)	Approx 165° E to 160° W Approx 52° E to 90° E
NA	4.7	4.7	NA		Navigation Sightings Measure orbit over Australia and SW Pacific. Approx 16 minutes of landmark availability	Approx (0:55:00) to (1:11:00)	Approx 110° E to 176° W
NA	4.8	4.8	NA		Preparation for Delta V Approx 5 minutes of crew procedures to compute delta V and prepare systems	Approx (1:11:00) to (1:16:00)	
4.9	NA	NA	4.9	Programed S-IVB Roll		(1:20:00)	

Table 3-8. Nominal Training Mission (Cont)

Number-Mission				Mission Event	Crew Activity and Notes	GMT and Mission Time	Geographic Position
A	B	C	D				
NA	⑤	⑤	NA	Delta V Mission B - plane change of -1° to 30.69° inclination. Mission C - initiate Hohmann transfer from 105 n mi to 130 n mi	Monitor-Control Delta V	15:19:14 GMT (1:17:44)	161.73° W, 0° Lat
NA	5.1	5.1	NA		Fine Align IMU and SCS Approx 10 minutes of crew procedures	Approx (1:19:00) to (1:29:00)	Approx 157° W to 124° W
5.2	NA	NA	5.2	Jettison S-IVB	Monitor Jettison	(1:30:00)	
NA	NA	NA	5.3		Transposition and Docking	(1:30:00) to (2:25:00)	
5.4	NA	NA	NA		Initiate two-man extended mission procedures (one man in rest cycle). Navigation sightings, IMU alignment, and system management	(1:30:00) to (2:25:00)	
5.5	5.5	5.5	NA		Navigation Sightings Measure orbit with Mexican and U.S. landmarks. Approx 10 minutes of landmark availability	Approx (1:30:00) to (1:40:00)	Approx 120° W to 75° W
⑥	⑥	⑥	⑥	Start Second Orbit		15:40:02 GMT (1:40:02)	76.08° W, 31.69° N
NA	NA	6.1	NA		Fine Align IMU and SCS Approx 10 minutes of crew procedures	Approx (1:40:00) to (1:50:00)	75° W to 45° W
6.2	6.2	NA	NA		Navigation Sightings Measure orbit with African and Madagascar landmarks. Approx 22 minutes of landmark availability	Approx (1:52:00) to (2:14:00)	Approx 24° W to 52° E
NA	NA	6.3	NA		Preparation for Delta V Approx 5 minutes of crew procedures to compute delta V and prepare systems	Approx (1:57:00) to (2:02:00)	
NA	NA	6.4	NA	Inhibit Day Terminator Prevent day-night terminator initiation	Permits landmark sightings over Australia and the SW Pacific	Before (2:10:00)	
NA	NA	⑦	NA	Delta V Circularize orbit at 130 n mi	Monitor-Control Delta V	16:04:46 GMT (2:02:26)	6.85° E, 0° Lat
NA	7.1	7.1	NA		Fine Align IMU and SCS Approx 10 minutes of crew procedures	Mission C Approx (2:03:00) to (2:13:00) Mission B Approx (2:30:00) (2:40:00)	Approx 7° E to 47° E Approx 120° E to 160° E

Table 3-8. Nominal Training Mission (Cont)

Number-Mission				Mission Event	Crew Activity and Notes	GMT and Mission Time	Geographic Position
A	B	C	D				
7.2	NA	NA	NA		Begin minimum activity operations	(2:15:00)	
7.3	NA	NA	NA		Terminate Minimum Activities Terminate Extended Mission Procedures	(2:25:00)	
NA	NA	NA	7.4		Secure from Transposition and Docking Maneuvers	(2:25:00)	
NA	NA	7.5	NA		Navigation Sightings Measure orbit with Australian and SW Pacific landmarks. Approx 10 minutes of landmarks available	Mission C Approx (2:25:00) to (2:35:00)	Approx 105° E to 155° E
7.6	NA	NA	NA		Coarse Align IMU Approx 20 minutes of crew procedures	(2:25:00) to (2:45:00)	Approx 120° E to 175° W
NA	NA	NA	7.7		Star/Lunar Landmark Navigation Night phase with moon available during mission time 2:32:00 to 2:47:00	(2:30:00) to (2:45:00)	Approx 120° E to 175° W
NA	7.8	7.8	NA		Preparation for Delta V Approx 5 minutes of crew procedures to compute delta V and prepare systems	Approx (2:40:00) to (2:45:00)	
NA	⑧	⑧	NA	Delta V Mission B - plane change +1° to 31.69° inclination Mission C - initiate Hohmann transfer from 130 n mi to 105 n mi	Monitor-Control Delta V	16:45:33 GMT (2:45:33)	176° E, 0° Lat
8.1	8.1	8.1	8.1		Fine Align IMU and SCS Approx 10 minutes of crew procedures	Approx (2:46:00) to (2:56:00)	Approx 176° E, 150° W
8.2	8.2	8.2	8.2		Navigation Sightings Measure earth orbit with U.S. landmarks. Approx 12 minutes of landmark availability	Approx (3:01:00) to (3:13:00)	Approx 130° W to 75° W
⑨	⑨	⑨	⑨	Start Third Orbit		17:08:02 GMT (3:08:02)	98.28° W, 31.69° N
NA	NA	9.2	NA		Preparation for Delta V Approx 5 minutes of crew procedures to compute delta V and prepare systems	Approx (3:25:00) to (3:30:00)	
NA	NA	⑩	NA	Delta V Circularize orbit at 105 n mi	Monitor-Control Delta V	17:30:02 GMT (3:30:02)	14.0° W, 0° Lat
NA	NA	10.1	NA	Inhibit Day Terminator Prevent day-night terminator initiation	Permits landmark sightings with South African and Madagascar landmarks	Before (3:34:00)	

Table 3-8. Nominal Training Mission (Cont)

Number-Mission				Mission Event	Crew Activity and Notes	GM and Mission Time	Geographic Position
A	B	C	D				
NA	NA	10.2	NA		Navigation Sightings Measure orbit with South African and Madagascar landmarks. Approx 11 minutes of landmark availability	Approx (3:36:00) to (3:47:00)	Approx 5° E to 48° E
10.3	10.3	10.3	10.3		Fine Align IMU and SCS Approx 10 minutes of crew procedures	Approx (3:50:00) to (4:00:00)	Approx 64° E to 107° E
10.4	10.4	10.4	10.4		Preparation for Retrofire Approx 15 minutes of crew procedures to compute retro and prepare systems	Approx (4:00:00) to (4:15:30)	
⑪	⑪	⑪	⑪	Delta V Retrograde from earth orbit	Monitor-Control Delta V	18:16:00 GMT (4:16:00)	162° E, 4° N
11.1	11.1	11.1	11.1		Preparation for C/M-S/M Separation Approx 3 minutes of crew procedures to establish systems configuration for separation and C/M independent operation	Approx (4:16:18) to (4:19:00)	
⑫	⑫	⑫	⑫	C/M-S/M Separation	Monitor Separation	Approx 18:19:00 GMT (4:19:00)	Approx 171° E, 11° N
12.1	12.1	12.1	12.1		Preparation for Entry Approx 4 minutes of checks of C/M systems independent operation	Approx (4:19:00) to (4:23:00)	
⑬	⑬	⑬	⑬	.05 g (Start Entry)	Monitor .05 g	Approx 18:23:00 GMT (4:23:00)	179° E, 16° N
13.1	13.1	13.1	13.1		Monitor-Control Entry	Approx (4:23:00) (4:33:00)	
13.2	13.2	13.2	13.2		Monitor-control parachute deployment and earth landing sequence	Approx (4:33:00) to (4:40:00)	
⑭	⑭	⑭	⑭	Touchdown	Start postlanding procedures	18:40:00 GMT (4:40:00)	156° W, 26° N

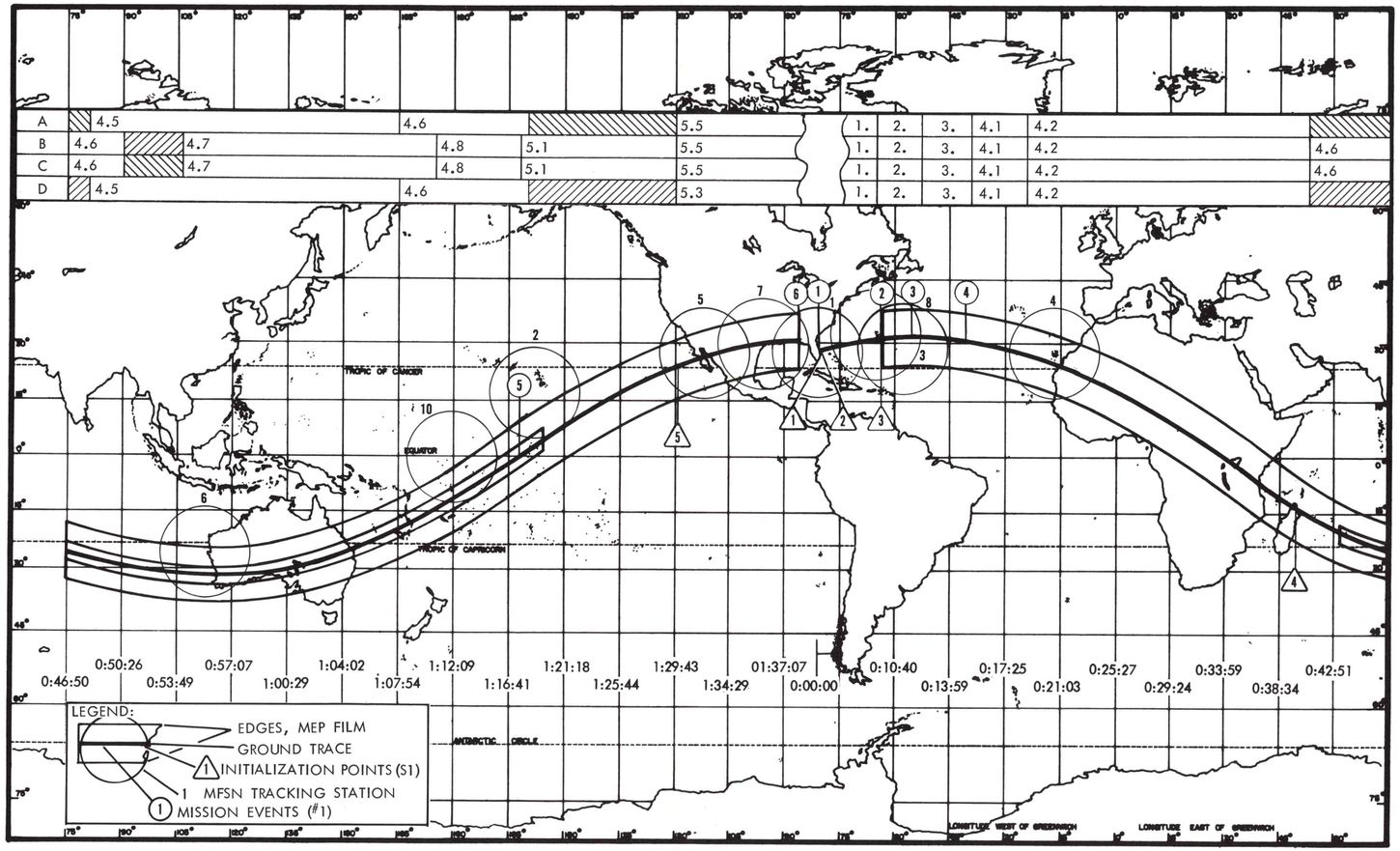

SM-6T-2-02-533

Figure 3-37. Nominal Mission Chart, Orbit 1

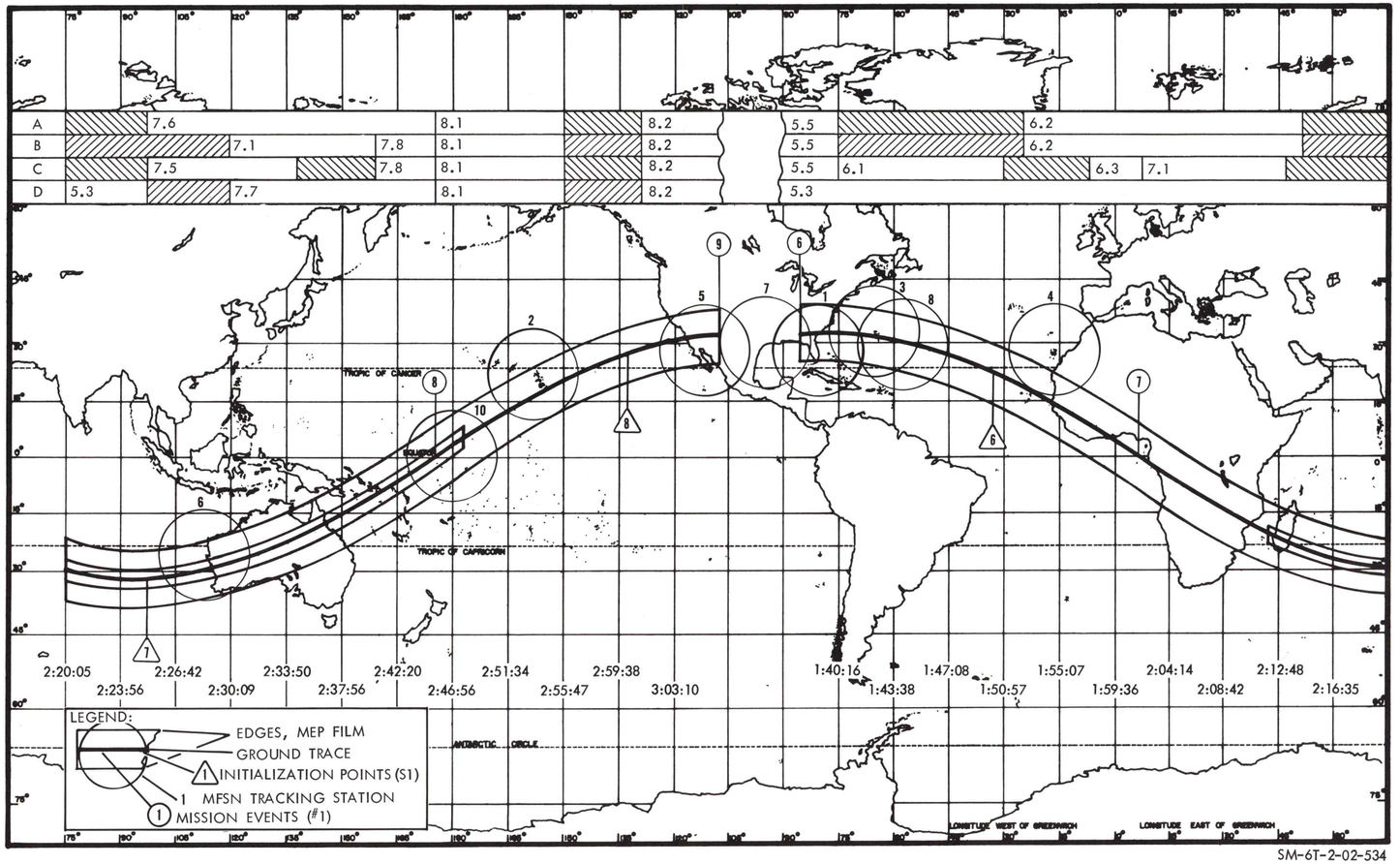

SM-6T-2-02-534

Figure 3-38. Nominal Mission Chart, Orbit 2

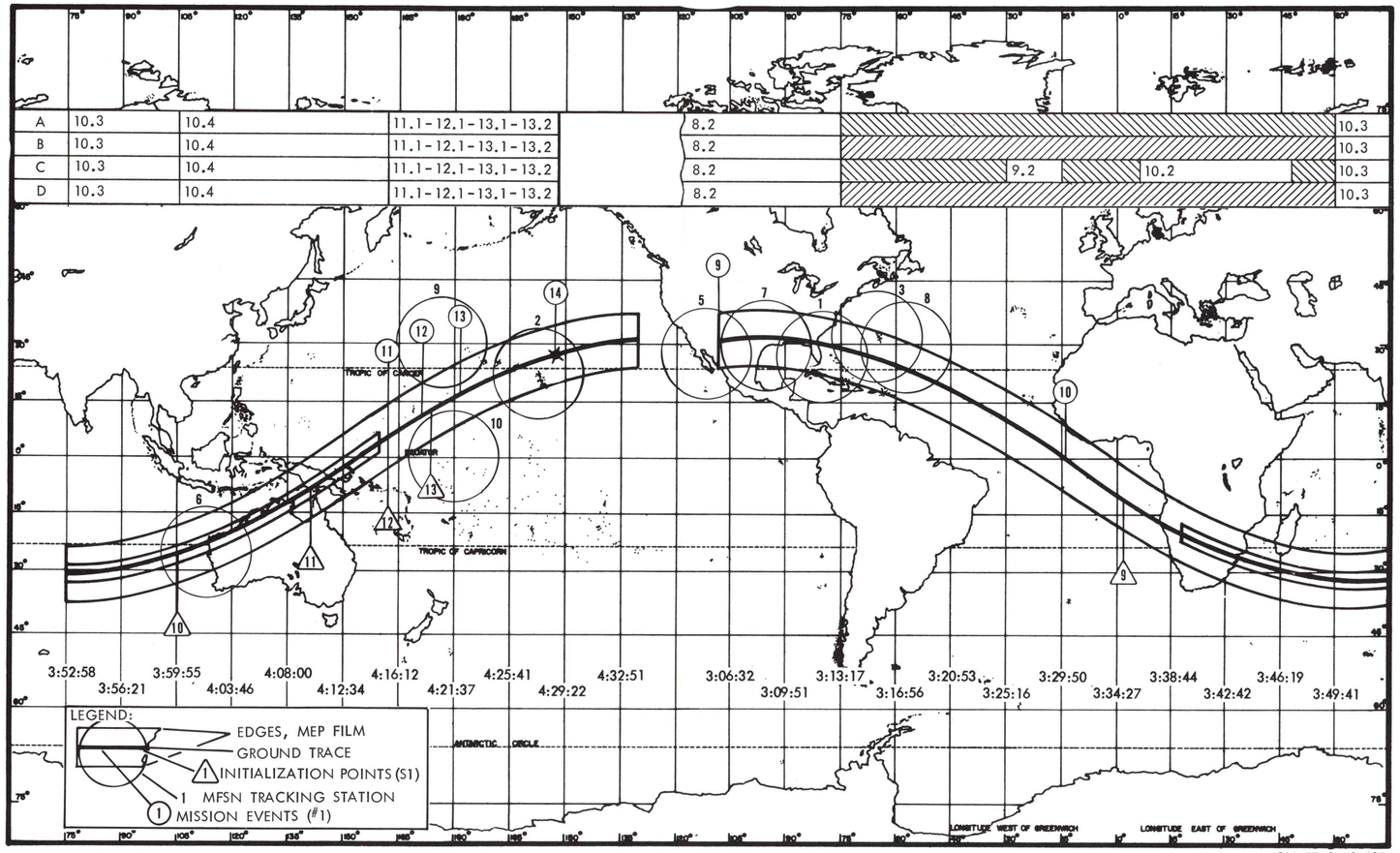

SM-6T-2-02-535

Figure 3-39. Nominal Mission Chart, Orbit 3

3.2.6 BUILDING ADDITIONAL MISSIONS.

The preceding paragraphs have defined the basic dynamics of the nominal training mission and four mission plans to be used for flight crew training. However, the data contained in this section of the handbook can be transposed into many additional mission profiles. A few suggestions follow.

3.2.6.1 Orbital Operations at 130 N Mi.

Mission C (Hohmann transfers) involves transferring from 105-n mi altitude and back again into the three-orbit mission. Where training in orbital operations at 130-n mi altitude, and retro and entry from that altitude is desired, the Hohmann transfer back to 105 n mi can be omitted. Data for entry from 130-n mi circular orbit is included in figures 3-29 and 3-30.

3.2.6.2 Operations in Elliptical Orbit.

Mission C (Hohmann transfers) involves transient operations in two elliptical orbits. By eliminating or postponing the circularization of these orbits, procedures during elliptical orbit can be practiced. Dynamics data for entry from the resulting 105/130-n mi elliptical orbit can be found in figure 3-31. Geographic trace information for entry from perigee of 105/130-n mi elliptical orbit during the third orbit can be found in figure 3-32.

3.2.6.3 Missions of Varying Duration.

Any of the four-mission plans of the nominal training mission can be abridged to less than, or extended to more than, the defined three-orbit duration. Dynamic graphics for retro and entry from the various nominal mission orbits, 105-n mi circular, 130-n mi circular, and 105/130-n mi elliptical, are provided in figures 3-23, 3-29, and 3-31, respectively. Geographic trace data available in this handbook for a number of entry points is listed in table 3-6.

However, the AMS permits retrograde and entry from any point in orbit. Under these circumstances, the geographic location at which the various events take place is completely variable but the time-range-event relationship between the events themselves remains constant. Since figures listed in table 3-6 contain such time-range-event data for all three varieties of orbit, it is possible to prepare geographic trace information for retrograde from any point in the nominal mission and/or any mission sustaining nominal mission characteristics beyond the three-orbit definition. Preparation of such information for retro and entry points, other than those listed in table 3-6, is accomplished by finding appropriate geographic trace information in the existing graphics (listed in table 3-6) and transposing the trace to subtend from the desired orbital point of retrofire along the orbital path to the point of touchdown.

3.2.6.4 RCS Retrograde.

Mission 204A, as defined in MSC Note 65-FM-58, includes a capability to retrograde from orbit using the RCS system for retrofire. The Mission 204A sequence for RCS retrograde can be approximated for training purposes by performing RCS retrofire from the 105-n mi circular orbit of the nominal

training mission. Geographic descriptions of such an entry are provided in figures 3-27 and 3-28. Data is also provided describing RCS retro and entry from Mission 204A (per MSC Note 65-FM-58). Figures 3-22 and 3-23 describe the geographic trace for Pacific and Atlantic recovery from such a retro and entry.

3.2.6.5 Nonoptimum Hohmann Transfer.

Mission 204A, as defined in MSC Note 65-FM-58, includes a nonoptimum Hohmann transfer with the second and third delta Vs of the mission. Where it is desirable to approximate the nonoptimum transfer for training purposes using the AMS, Mission 204A thrusting events may be substituted for the first and second delta V events in nominal Mission C (Hohmann transfers).

3.2.6.6 Atlantic Range Recovery.

Plans for Mission 204A, published subsequent to MSC Note 65-FM-58, call for Atlantic range recovery. The trajectory for MSC Note 65-FM-58 calls for recovery in the Pacific range.

In the nominal training mission, the 16th orbit approaches out of the west over southern Mexico and proceeds on a northeastern direction passing east of Bermuda. Retrofire is over southern Mexico for a touchdown point east of Bermuda. Where use of this range is desired or required for training purposes, simulated MSFN stations and ships (numbers 7, 1, 8, and 3) may be used for ground support.

Simulated retrograde and entry in the second orbit will more closely approximate the planned Mission 204A recovery with a point of retro off Mexico and touchdown east of Bermuda. Geographic data for Atlantic range recovery during the 16th orbit at an altitude of 105 n mi (circular) is provided in figure 3-32.

3.3 ORGANIZATION OF THE TRAINING SYLLABUS.

The syllabus of training for the AMS is subdivided into types of training, training exercises, training sessions, and simulator runs.

The gross identification of syllabus material is by type of training. The types of training are the different manners of simulator utilization in a progressive and developmental training evolution. Three types of training are required to complete the AMS syllabus. In the order of accomplishment, these are part task, mission task, and typical mission.

Each type of training involves several training exercises. Training exercises are defined as blocks or phases of training. The accomplishment of these blocks or phases constitute specific and significant training milestones. Exercises are organized in a recommended sequence for accomplishment.

Each training exercise is made up of a group of training sessions. Sessions are the basic element of the AMS syllabus; each session being, basically, a lesson in spacecraft operation. Sessions are generally comprised of flight crew performance of all the variations of a given procedure or problem. While many of the sessions are too complex to permit completion in one continuous sitting, accomplishment of each session should be distributed in a minimum of elapsed time to permit maximum training use of comparison between the various elements of the session.

Each of the training sessions is comprised of a number of simulator runs. Simulator runs are defined, for purposes of the handbook, as each different operation of the simulator (between RUN and RESET or RE-CYCLE) for training purposes. The number of times each peculiar run must be iterated to accomplish training objectives is not the subject of this handbook.

3.3.1 TYPES OF TRAINING.

This paragraph explains the three types of training identified in paragraph 3.3. Each is discussed separately.

3.3.1.1 Part Task Training.

Part task training is defined as that training involving only one crewmember and one instructor-operator. The purpose of such training is to provide individual crewmembers experience in the basic procedures and skills required to operate the Apollo spacecraft.

3.3.1.2 Mission Task Training.

The purpose of mission task training is to provide flight crewmembers with training in the various spacecraft procedures for accomplishing specific mission events. Training includes procedures for both the dynamic mission events (launch and ascent, abort, delta V, entry, etc.) and the routine procedures for sustaining spacecraft systems and monitoring flight path during orbital operations.

3.3.1.3 Typical Mission Training.

Typical mission training is defined as complete mission simulations (usually of short duration) comprised of events and situations selected for purposes of effective training. The purpose of typical mission training is twofold. The first purpose is to provide flight crews with experience in a specific set of simulated missions (that is, the nominal training mission) that are representative of all aspects of the planned Apollo Mission 204A. The second purpose is to provide the flight crew training in recovering from specific mission problem situations by the timely application of crew procedures.

3.3.2 IDENTIFICATION OF TRAINING SESSIONS.

An alphanumeric code has been established to identify training sessions in the AMS training syllabus. The code is as follows:

PT)
MT) Type of training
TM)

1.)
2.) First, second, third, etc., exercise within type
3.) of training
n.)

1)
2) First, second, third, etc., session within
3) exercise
n)

Examples:

PT2.3 is the third session of the second part task exercise.
MT1.2 is the second session of the first mission task exercise.

There is the possibility of adding a third number to the code for the purpose of identifying simulation runs within a given session; for example, PT2.3.1 is the first run of the third session of the second part task exercise. A complete outline of the AMS training syllabus is provided in table 3-9.

3.4 GENERAL DESCRIPTION, EXERCISES, AND SESSIONS.

The purpose of the following paragraphs is to explain the scope and purpose of each exercise and session in table 3-9. Detailed descriptions of and specific instructions for each session are the subject of section 2 (Session Data) of Volume II of this handbook.

3.4.1 SYSTEM PROCEDURES (EXERCISE PT1).

System procedures training accomplished in this exercise encompasses those spacecraft system procedures (except for G&N) that are reiterated throughout the mission to use the systems, check system status, maintain system status, and alter system mode of operation.

3.4.1.1 SCS Operation (Session PT1.1).

This session is comprised of introduction to and practice in operating the SCS and G&N systems as they relate to attitude control. Training in attitude manipulation with both S/M RCS and C/M RCS is included. Availability of the S-IVB for viewing through the spacecraft windows is strongly recommended. External visibility of the S-IVB in close proximity provides an

Table 3-9. AMS Training Syllabus Outline

PART TASK TRAINING	
PT1	SYSTEM PROCEDURES (Exercise)
PT1.1	SCS operation (session)
PT1.2	RCS and SPS operation (session)
PT1.3	EPS operation (session)
PT1.4	ECS operation (session)
PT1.5	Watch station procedures (session)
PT2	NAVIGATION AND IMU ALIGNMENT (Exercise)
PT2.1	IMU alignment (session)
PT2.2	Landmark tracking navigation (session)
PT2.3	Star-lunar landmark navigation (session)
PT2.4	G&N contingencies (session)
PT3	DELTA V PROCEDURES (Exercise)
PT3.1	Primary and backup delta V modes (session)
PT3.2	Retrograde from earth orbit (session)
PT4	ENTRY (Exercise)
PT4.1	G&N mode entry (session)
PT4.2	Entry contingencies (session)
PT5	LAUNCH-BOOST AND ABORT (Exercise)
PT5.1	Launch-boost procedures (session)
PT5.2	LES aborts (session)
PT5.3	SPS aborts (session)
MISSION TRAINING	
MT1	PRELAUNCH, LAUNCH-BOOST, ABORT (Exercise)
MT1.1	Prelaunch and launch-boost (session)
MT1.2	LES aborts (session)
MT1.3	SPS aborts (session)
MT2	ORBITAL OPERATIONS (Exercise)
MT2.1	Initial earth orbital procedures (session)
MT2.2	Orbital watch station routines (session)
MT2.3	Transposition and S-IVB viewing (session)

Table 3-9. AMS Training Syllabus Outline (Cont)

MT3	PLANE CHANGE AND HOHMANN TRANSFER PROCEDURES (Exercise)
MT3.1	Plane change procedures (session)
MT3.2	Hohmann transfer procedures (session)
MT4	DEORBIT AND ENTRY (Exercise)
MT4.1	SPS deorbit and entry procedures (session)
MT4.2	RCS deorbit and entry (session)
MT4.3	Early mission termination (session)
	TYPICAL MISSION TRAINING
TM1	BASIC NOMINAL MISSION (Exercise)
TM1.1	Orbital mission routines (session)
TM1.2	Orbital mission/transposition and docking (session)
TM1.3	Abortive early mission termination (session)
TM2	NOMINAL MISSION, PLANE CHANGES (Exercise)
TM2.1	Plane change mission (session)
TM2.2	Plane change contingencies (session)
TM3	NOMINAL MISSION, HOHMANN TRANSFERS (Exercise)
TM3.1	Transfers to 105-n mi/130-n mi elliptical orbit (session)
TM3.2	Hohmann transfer from 105 n mi to 130 n mi to 105 n mi (session)
TM4	MISSION 204A EVENTS (Exercise)
TM4.1	Nonoptimum Hohmann transfer (session)
TM4.2	Second orbital transfer (session)
TM4.3	Final phase, Mission 204A (SPS retro) (session)
TM4.4	Final phase, Mission 204A (RCS retro) (session)

excellent media for observing the rates and characteristics of attitude and translation changes under various circumstances. Runs involved are as follows:

- Walk-through of SCS setup, power-on verification, and SCS and G&N attitude and translation control modes (S/M RCS)
- Practice of SCS setup, power-on verification, and SCS and G&N attitude and translation control modes
- Practice of S/M RCS attitude control in G&N, SCS, and manual direct modes with selected S/M RCS jets inoperative

- Practice C/M RCS attitude control (in nonaerodynamic free fall) in G&N, SCS, and manual direct mode
- Practice C/M RCS attitude control (in nonaerodynamic free fall) in G&N, SCS, and manual direct mode with selected C/M RCS jets inoperative.

3.4.1.2 RCS and SPS Operation (Session PT1.2).

This session includes demonstration and practice of management and operating procedures for spacecraft thrusting systems. Systems involved are S/M RCS, C/M RCS, and SPS. Procedures are organized so that all can be accomplished by one crewman moving from station 3 to station 1. Runs involved are as follows:

- Walk-through of SPS propellant gaging, gimbal position indicator testing, and SPS and RCS periodic verification.
- Walk-through of procedures for preparing for and accomplishing G&N mode delta V (stations 3 and 1)
- Practice preparing for and accomplishing G&N mode delta V (stations 3 and 1)
- Walk-through of procedures for SCS mode delta V (station 1)
- Practice preparing for and accomplishing SCS mode delta V (stations 3 and 1).

3.4.1.3 EPS Operation (Session PT1.3).

This session includes demonstration and practice of spacecraft procedures for EPS operation. Runs involved are as follows:

- Walk-through of EPS periodic checks, cryogenic pressure control, and quantity balance
- Walk-through fuel cell purge and battery charge
- Practice EPS checks with simulated malfunctions
- Walk-through of fuel cell shutdown procedure.

3.4.1.4 ECS Operation (Session PT1.4).

This session comprises the demonstration and practice of spacecraft procedures for ECS operation. Simulations are all shirtsleeve with initial walk-throughs followed by practice runs. Runs involved are as follows:

- Walk-through of initial orbital ECS procedures (stations 1, 3, and 4)
- Practice of initial orbital ECS procedures

- Walk-through of routine orbital ECS procedures
- Walk-through ECS preparation for deorbit and entry
- Practice ECS preparation for deorbit and entry
- Walk-through waste management system procedures
- Walk-through demonstration of ECS malfunctions, and alternate modes and procedures.

3.4.1.5 Watch Station Procedures (Session PT1.5).

It is the purpose of this session to provide the flight crew practice in procedures for routine periodic checking and servicing of spacecraft systems, and the reporting of system status via the telecommunication system. Runs are as follows:

- Walk-through communications procedures
- Practice periodic checks - EPS, ECS, SPS, S/M RCS, and C/M RCS (without malfunctions)
- Practice periodic checks - EPS, ECS, SPS, and S/M RCS and C/M RCS with noncritical simulated malfunctions requiring alternate modes or redundant systems
- Practice propellant quantity gaging procedure, fuel cell purge, manual pressure control verification, quantity balance verification, and waste water dump
- Practice removing and inserting attenuator panels.

3.4.2 NAVIGATION AND IMU ALIGNMENT (EXERCISE PT2).

This exercise provides training in the setup and operation of the G&N system. Such training includes setup and readiness status procedures, equipment operating procedures, navigation techniques, fault analysis, alternate modes, and redundant systems. There are four training sessions in PT2.

3.4.2.1 IMU Alignment (Session PT2.1).

This session introduces the operation of the G&N system and includes procedures for G&N activation and IMU and AGCU (FDAI) alignment. Runs are as follows:

- Walk-through of G&N activation, coarse and fine IMU alignment (normal and manual), and AGCU (FDAI) alignment

- Practice of G&N activation, coarse and fine IMU alignment, and AGCU (FDAI) alignment

- Practice of coarse IMU alignment (manual).

3.4.2.2 Landmark Tracking Navigation (Session PT2.2).

This session includes the procedures for spacecraft navigation by the landmark tracking technique using the spacecraft G&N system. Landmark selection and recognition is emphasized along with equipment operating procedures. Runs are as follows:

- Walk-through of landmark tracking navigation procedures

- Practice landmark tracking navigation procedures

- Practice G&N activation, coarse and fine IMU alignment, followed with orbit measurement by the landmark tracking method.

3.4.2.3 Star-Lunar Landmark Navigation (Session PT2.3).

This session is to provide the flight crew training in spacecraft navigation by the star-lunar landmark technique using the spacecraft G&N system. Flight testing of the technique is one of the mission objectives of 204A. Runs are as follows:

- Walk-through of star-lunar landmark navigation procedures
- Practice star-lunar landmark navigation procedures.

3.4.2.4 G&N Contingencies (Session PT2.4).

This session comprises the demonstration and practice of G&N malfunctions, special procedures, and alternate modes. Runs involved are as follows:

- Practice G&N operation with various optical subsystem failures
- Practice G&N operation with various IMU subsystem failures
- Practice G&N operation with various AGC subsystem failures.

3.4.3 DELTA V PROCEDURES (EXERCISE PT3).

This exercise comprises the crew procedures for accomplishing delta V and those related navigation and system procedures required to prepare for delta V. Such preparations include navigation for determining delta V requirements and preparation of the SPS for use. The simulation runs are organized so that one crewmember may accomplish the entire sequence by moving from station 4 to station 3 to station 1. The exercise contains two training sessions.

3.4.3.1 Primary and Backup Delta V Modes (Session PT3.1).

This session includes introduction of the basic delta V procedures and practice performing delta V for purposes of altering earth orbit. Four modes

of delta V are demonstrated and practiced. The orbital change objective of each run is the same, minus one degree plane change. Runs are as follows:

- Walk-through procedures for delta V in the G&N, SCS, G&N/manual TVC, and SCS/manual TVC modes
- Practice procedures for G&N mode delta V
- Practice procedures for SCS mode delta V
- Practice procedures for delta V in the G&N/manual TVC mode
- Practice procedures for delta V in the SCS/manual TVC mode.

3.4.3.2 Retrograde From Earth Orbit (Session PT3.2).

This session provides training in crew procedures for preparing for and accomplishing retrograde from earth orbit by means of the spacecraft service propulsion and reaction control systems. Runs are as follows:

- Walk-through of procedures for preparing spacecraft systems for retrograde
- Practice final orbit navigation and system procedures for preparing for and accomplishing SPS/G&N mode retrograde
- Walk-through of procedures for preparing for and accomplishing RCS retrograde
- Practice final orbit navigation and system procedures for preparing for and accomplishing RCS retrograde.

3.4.4 ENTRY (EXERCISE PT4).

This exercise is provided to train flight crewmembers in the procedures for C/M-S/M separation, entry, and descent operations. Two sessions are involved.

3.4.4.1 G&N Mode Entry (Session PT4.1).

This session comprises the demonstration and practice of crew procedures for preparing for and accomplishing C/M-S/M separation, preparing for and accomplishing G&N mode entry, and monitor-control of the earth landing sequence. Runs are as follows:

- Walk-through of procedures for preparing for and accomplishing C/M-S/M separation, preparing for and accomplishing G&N mode entry (from SPS retro), and monitor-control of the earth landing sequence

- Practice procedures for preparing for and accomplishing C/M-S/M separation and preparing for and accomplishing G&N mode entry (from SPS retro)

- Practice procedures for preparing for and accomplishing SPS retrograde, C/M-S/M separation, G&N mode entry, and monitor-control of earth landing sequence.

3.4.4.2 Entry Contingencies (Session PT4.2).

This session is for the purpose of providing flight crewmembers training in the use of alternate modes, redundant systems, and manual overrides in accomplishing entry and recovery under system malfunction circumstances. Runs are as follows:

- Walk-through of procedures for entry in the SCS mode (SPS retro trajectory)

- Practice SCS mode entry (SPS retro trajectory)

- Practice entry (SPS retro trajectory) in G&N mode with selected C/M RCS jets inoperative

- Practice entry (SPS retro trajectory) in SCS mode with selected C/M RCS jets inoperative

- Practice entry (SPS retro trajectory) in manual direct mode

- Practice entry (SPS retro trajectory) in manual direct mode with selected C/M RCS jets inoperative

- Practice preparation for separation, preparation for entry, SCS mode entry (SPS retro trajectory), and monitor-control of the earth landing sequence with sequencing malfunctions

- Practice preparation for and accomplishment of RCS retrograde, separation, and SCS mode entry.

3.4.5 LAUNCH-BOOST AND ABORT (EXERCISE PT5).

This exercise provides demonstration and practice of launch and ascent procedures for station 1. Procedures include monitoring sequenced events on the EDS displays, analyzing trajectory characteristics on the basis of FDAI and AGC displays, recognizing abortive situations, and initiating and accomplishing LES and SPS aborts. Since prelaunch procedures are primarily a coordinated crew activity, part task training for that mission phase would be ineffective and none is prescribed. There are three sessions in exercise PT5.

3.4.5.1 Launch-Boost Procedures (Session PT5.1).

This session is to provide demonstration and practice in the station 1 flight crew procedures for launch and ascent to orbit. Runs are as follows:

- Walk-through of station 1 launch and ascent procedures
- Practice of station 1 launch and ascent procedures.

3.4.5.2 LES Aborts (Session PT5.2).

This session is to provide flight crewmembers with experience in all aspects of LES abort procedures for station 1. Runs involved are as follows:

- Walk-through of pad (and low-altitude before +42 seconds) abort sequence
- Practice procedures for LES abort (42 seconds to 30,000 ft)
- Practice procedures for LES abort (30,000 to 120,000 ft)
- Practice procedures for LES abort (120,000 ft to LET jettison)
- Practice LES abort (30,000 to 120,000 ft) with sequencing malfunctions
- Practice low-altitude LES abort (less than 10,000 ft) with sequencing malfunctions.

3.4.5.3 SPS Aborts (Session PT5.3).

The purpose of this session is to provide the flight crew training in station 1 procedures for SPS abort. As the handbook goes to press, there is insufficient AMS and spacecraft data to define the specifics of part task training in SPS abort-to-orbit or SPS abort-to-suborbital trajectory in SCS mode. Runs in session PT5.3 are as follows:

- Walk-through of station 1 procedures for SPS retrograde abort-to-suborbital trajectory (G&N mode)
- Practice station 1 procedures for SPS posigrade abort-to-suborbital trajectory (G&N mode)
- Practice station 1 procedures for SPS retrograde abort-to-suborbital trajectory (G&N mode)
- Practice station 1 procedures for SPS posigrade abort-to-orbit.

3.4.6 PRELAUNCH, LAUNCH-BOOST, AND ABORT (EXERCISE MT1).

This exercise provides demonstration of the coordinated crew procedures for prelaunch and crew practice of procedures for prelaunch, launch and ascent, LES aborts, and SPS aborts. Simulated malfunctions are used to

induce requirements for prelaunch and override of sequence events during aborts. Available data on SPS abort-to-orbit, SCS mode, and SPS abort is prohibitive to detailed definition of training required. There are four training sessions in MT4.

3.4.6.1 Prelaunch and Launch-Boost (Session MT1.1).

This session comprises the demonstration and practice of crew procedures for prelaunch, launch, and ascent to orbit. Runs are as follows:

- Walk-through of crew procedures for prelaunch
- Practice crew procedures for normal prelaunch and launch-boost to orbit.

3.4.6.2 LES Aborts (Session MT1.2).

This session provides demonstration and practice of flight crew procedures for LES aborts. Runs are as follows:

- Walk-through of crew procedures for pad abort
- Practice crew procedures for LES abort (+42 seconds to 30,000 ft)
- Practice crew procedures for LES abort (30,000 to 120,000 ft)
- Practice crew procedures for LES abort (120,000 ft to LET jettison).

3.4.6.3 SPS Aborts (Session MT1.3).

This session is to provide training in the integrated crew procedures for SPS aborts. Such procedures include both abort-to-suborbital trajectory and abort-to-orbit. However, as of the date of handbook publication, there is insufficient AMS and spacecraft data to define the specifics of mission task training in SPS abort-to-orbit or SPS abort-to-suborbital trajectory in the SCS mode. Simulator runs are as follows:

- Walk-through of integrated crew procedures for SPS abort-to-suborbital trajectory
- Practice integrated crew procedures for SPS abort-to-suborbital trajectory due to booster failure
- Practice integrated crew procedures for SPS abort-to-orbit because of booster failure
- Practice recognizing spacecraft system failures requiring suborbital abort and accomplishing SPS abort.

3.4.7 ORBITAL OPERATIONS (EXERCISE MT2).

It is the purpose of this exercise to provide training in crew procedures for spacecraft navigation and systems management during routine phases of the earth orbital mission. Transposition of the spacecraft for S-IVB viewing and simulated docking has also been included. There are three training sessions in MT2.

3.4.7.1 Initial Earth Orbital Procedures (Session MT2.1).

This session comprises the demonstration and practice of integrated crew procedures for the initial phases of orbital operations. Procedures include transfer of systems configuration from launch-boost, initial IMU alignment and navigation, and systems checkout. Simulator runs are as follows:

- Walk-through of integrated crew procedures for initial phases of orbital operations
- Practice crew procedures for initial phases of orbital operations.

3.4.7.2 Orbital Watch Station Routines (Session MT2.2).

Training provided by this session is for two-man operation of the spacecraft with the third crewmember in rest cycle. The third member is, of course, not involved in or required for the procedures involved. Crew activities include periodic system checks, navigation and IMU alignment, systems management and servicing, and systems operation under reduced power. Only one definitive run is involved. Number of reiterations required for training is not the subject of this handbook.

3.4.7.3 Transposition and S-IVB Viewing (Session MT2.3).

This session is to provide the flight crew experience in spacecraft transposition and simulated docking. One run with three crewmembers is prescribed. Crewmembers will take turns in stations 1, 2, and 3 for purposes of practicing spacecraft rotation and translation in station 1, and for experience in observing the S-IVB in stations 2 and 3.

3.4.8 PLANE CHANGE AND HOHMANN TRANSFER PROCEDURES (EXERCISE MT3).

This exercise has been included in the syllabus to provide crew training in the procedures for preparing for and accomplishing delta V for different reasons throughout the earth orbital mission. Procedures include navigation, systems preparations, and SCS and G&N system operation in computing and accomplishing delta V. Two training sessions are involved. The sessions may be accomplished with either a two- or a three-man crew.

3.4.8.1 Plane Change Procedures (Session MT3.1).

This session is to demonstrate the integrated crew procedures for preparing for and accomplishing G&N mode delta V, and to provide practice in the plane change application of such procedures. Runs are as follows:

- Walk-through of integrated crew procedures for preparing spacecraft systems for and accomplishing plane change (-1 degree) delta V
- Practice integrated crew procedures for -1 degree plane change including measuring initial orbit, aligning IMU, preparing spacecraft systems for delta V, delta V, and measuring altered orbit.

3.4.8.2 Hohmann Transfer Procedures (Session MT3.2).

The purpose of this session is to provide additional practice of integrated crew procedures for G&N mode delta V by using such procedures in the Hohmann transfer application. Practice of SCS mode delta V in the same application is also included. Simulator runs involved are as follows:

- Practice integrated crew procedures for Hohmann transfer from 105-n mi to 130-n mi circular orbit including measuring initial orbit, IMU alignment, preparing for and accomplishing G&N delta V to transfer trajectory, measuring transient orbit, preparing for and accomplishing G&N delta V for purpose of circularization, and measuring the 130-n mi orbit

- Practice integrated crew procedures for Hohmann transfer from 130-n mi circular orbit to 105-n mi circular orbit using SCS mode for delta V; run to include measuring 130-n mi orbit, IMU alignment, preparing for and accomplishing SCS delta V to transfer trajectory, measuring transient orbit, preparing for and accomplishing SCS delta V for purposes of circularization, and measuring the 105-n mi orbit.

3.4.9 DEORBIT AND ENTRY (EXERCISE MT4).

This exercise is for the purpose of training the flight crew in coordinated crew procedures for preparing for retrofire (navigation and system procedures), deorbit maneuver, preparing for and accomplishing C/M-S/M separation, preparing for and accomplishing entry, monitor-control of the earth landing sequence, and postlanding procedures. There are three sessions in the exercise.

3.4.9.1 SPS Deorbit and Entry Procedures (Session MT4.1).

This session is to introduce the integrated crew procedures for preparing for and accomplishing the deorbit maneuver, C/M-S/M separation, entry, monitor-control of the earth landing sequence, and postlanding operation of spacecraft systems. Procedures for accomplishment in both G&N and SCS modes are included. Runs are as follows:

- Walk-through of integrated crew procedures for preparing spacecraft systems for and accomplishing the deorbit maneuver (G&N mode) C/M-S/M separation, G&N mode entry, the earth landing sequence, and postlanding system operation

- Practice crew procedures for preparing spacecraft systems for G&N deorbit maneuver from 105-n mi circular orbit and accomplishing retrofire, separation, G&N mode entry, the earth landing sequence, and postlanding system operation

- Practice crew procedures for preparing spacecraft systems for SPS deorbit maneuver from 105-n mi circular orbit and accomplishing SCS mode retrofire, separation, SCS mode entry and the earth landing sequence.

3.4.9.2 RCS Deorbit and Entry Procedures (Session MT4.2).

This session is to provide practice in the integrated crew procedures accomplishing retro and entry without the SPS by using RCS thrusting for retrograde. Entries in both the G&N and SCS modes are included. Runs are as follows:

- Practice crew procedures for preparing spacecraft systems for RCS retrograde from 105-n mi circular orbit and accomplishing retrofire (RCS), separation, and G&N mode entry
- Practice crew procedures for preparing spacecraft systems for RCS retrograde from 105-n mi circular orbit and accomplishing retrofire (RCS), separation, and SCS mode entry.

3.4.9.3 Early Mission Termination (Session MT4.3).

It is the purpose of this session to provide training in the integrated crew procedures for recovering from the extended mission configuration (one man in rest cycle, systems on minimum power) and accomplishing an emergency deorbit and entry. Runs are as follows:

- Walk-through of procedures for early mission termination from orbital operations configuration
- Practice crew procedures for early mission termination from orbital operations configuration.

3.4.10 BASIC NOMINAL MISSION (EXERCISE TM1).

A detailed description of the basic nominal mission and the crew activities involved is provided in paragraph 3.2.2 of this handbook. This exercise is for the purpose of accomplishing training in the mission and crew activities described in that paragraph. The nominal mission, transposition and docking described in paragraph 3.2.5, differs from the basic nominal mission in that orbital routine operations in the basic mission have been replaced with extensive practice in transposition, simulated docking, and S-IVB viewing. Because of the similarity in the two training missions, practice in both has been included in this exercise.

3.4.10.1 Orbital Mission Routines (Session TM1.1).

The subject of this session is a complete three-orbit mission involving prelaunch, launch, and ascent to orbit, initial orbital procedures, navigation and IMU alignment, systems checks and servicing, systems management during power conservation, two-man routines (with third crewman in rest cycle), preparation for and accomplishment of deorbit maneuver, C/M-S/M separation, entry and descent, and postlanding procedures. Simulated

malfunctions are used to provoke use of special procedures, redundant systems, and alternate modes. Runs are as follows:

- Practice crew procedures for three-orbit basic nominal mission with simulated malfunctions to induce use of special procedures; alternate modes and redundant systems in orbit; and crew override of sequencing events during C/M-S/M separation, G&N mode entry, and descent

- Practice crew procedures for three-orbit basic nominal mission with simulated malfunctions to induce use of special procedures, alternate modes and redundant systems in orbit, and retrograde and entry in SCS mode.

3.4.10.2 Orbital Mission-Transposition and Docking (Session TM1.2).

The purpose of this session is to provide the crew training in the nominal mission, transposition and docking described in paragraph 3.2.5. Only one simulation run is defined: a complete iteration of the mission defined in paragraph 3.2.5. The mission includes prelaunch, launch-boost to orbit, navigation and IMU alignment, spacecraft transposition and simulated docking with S-IVB, spacecraft maneuvers for purposes of S-IVB viewing, systems checks and servicing, preparation for and accomplishment of deorbit maneuver C/M-S/M separation, entry, descent to touchdown, and postlanding procedures.

3.4.10.3 Abortive Early Mission Termination (Session TM1.3).

It is the purpose of this session to provide crew training in procedures for recognizing requirements for and accomplishing early mission termination from 105-n mi earth orbit. Only one run is involved. The run entails a complete simulated mission from prelaunch through entry. The run includes practice of crew procedures for a simulated mission that requires early mission termination by SCS mode retrograde and entry in the second orbit because of spacecraft malfunctions.

3.4.11 NOMINAL MISSION, PLANE CHANGES (EXERCISE TM2).

A detailed description of the nominal mission, plane changes, and the crew activities involved is provided in paragraph 3.2.3. This exercise is for the purpose of accomplishing training in the mission and crew activities described in that paragraph.

3.4.11.1 Plane Change Mission (Session TM2.1).

Training in this session includes further practice of navigation, IMU alignment, and system management procedures along with delta V procedures for the purpose of changing orbital inclination. Only one definitive run is involved. Number of reiterations required for training is not a subject of this handbook. The run encompasses a complete simulated mission from launch through touchdown. The run is as follows: practice procedures for a simulated mission involving a -1-degree change in orbital inclination, followed one orbit later by a corresponding +1-degree change (all delta V maneuvers in G&N mode).

3.4.11.2 Plane Change Contingencies (Session TM2.2).

This session provides training in crew procedures for dealing with various mission and system contingencies during the nominal mission plane changes. Each run comprises a complete simulated mission from launch through touchdown. Runs are as follows:

- Practice procedures for a simulated mission including a -1-degree plane change and a +1-degree change one orbit later with simulated malfunctions to require second plane change, retrograde, and entry in the SCS mode

- Practice procedures for a simulated mission including a plane change planned for -1 degree, but resulting in a larger change because of SPS overrun (manual thrusting cutoff), computation, and accomplishment of plane change to intercept planned landing site, and malfunctions requiring SCS mode retrograde and manual direct mode entry.

3.4.12 NOMINAL MISSION, HOHMANN TRANSFERS (EXERCISE TM3).

In the detailed description of the nominal mission, Hohmann transfers are provided in paragraph 3.2.4. This exercise is for the purpose of accomplishing training in the mission and crew activities described in that paragraph.

3.4.12.1 Transfer to 105/130-N Mi Elliptical Orbit (Session TM3.1).

The subject of this training session is a complete simulated mission from launch to touchdown involving transfer from 105-n mi circular orbit to 105/130-n mi elliptical orbit. The purpose of the session is to provide further practice of crew procedures for navigation, IMU alignment, delta V, and system management along with crew experience operating in elliptical orbit. Only one definitive run is involved. Number of reiterations required for training is not a subject of this handbook. The run is as follows: practice procedures for a simulated mission involving transfer from 105-n mi circular orbit to 105/130-n mi elliptical orbit with entry from orbital perigee.

3.4.12.2 Hohmann Transfers, 105 N Mi to 130 N Mi to 105 N Mi (Session TM3.2).

Training in this session provides still further practice in crew procedures for navigation, IMU alignment, delta V, and system management with emphasis on accomplishing delta V maneuvers. Each run entails a complete three-orbit mission. Runs a and b are continuous from launch to touchdown. Run c is the training summary and should be conducted from prelaunch through postlanding procedures. Runs are as follows:

a. Practice procedures for a simulated mission involving Hohmann transfer from 105-n mi orbit to 130-n mi orbit and back to 105-n mi orbit (all delta V maneuvers in G&N mode)

b. Practice procedures for a simulated mission involving Hohmann transfer from 105-n mi orbit to 130-n mi orbit and back to 105-n mi orbit (using simulated malfunctions to require final circularization delta V, retrograde and entry in the SCS mode)

c. Practice procedures for a simulated mission involving Hohmann transfer to 130 n mi with malfunctions to induce azimuth error in 130-n mi orbit, computing and accomplishing plane change to intercept planned landing site, malfunctions to induce SCS mode during the plane change retrograde, and entry.

3.4.13 MISSION 204A EVENTS (EXERCISE TM4).

This exercise is for purposes of transferring training acquired by flying the nominal training mission to specific critical events planned for Apollo Mission 204A. Runs are mission segments rather than complete missions. The Mission 204A events described in this handbook are from MSC Internal Note 65-FM-58 (April 26, 1965). However, it is anticipated and recommended that events from the latest 204A planning available at the time of training will be selected and substituted for these training sessions by NASA simulation agencies.

3.4.13.1 Nonoptimum Hohmann Transfer (Session TM4.1).

Mission 204A includes a nonoptimum Hohmann transfer (less than 180 degrees transfer trajectory) in the 21st revolution of the mission. This training session is comprised of one simulation run of that transfer and is provided here for crew training in real-time accomplishment of that event. It is suggested that the transfer be made from the 105-n mi to 130-n mi orbits of the nominal mission rather than the orbital characteristics of Mission 204A to simplify simulation initialization.

3.4.13.2 Second Orbital Transfer (Session TM4.2).

Mission 204A includes an orbital transfer in the 157th and 158th revolutions. The transfer includes the sixth and seventh SPS firings and changes the orbit from approximately 125-n mi circular orbit to a slightly elliptical orbit of 105/124 n mi. This training session is comprised of one simulation run encompassing both delta Vs and is included in the syllabus to provide crew training in the real-time accomplishment of the Mission 204A events. The run should include navigation and IMU alignment in both orbits.

3.4.13.3 Final Phase, Mission 204A (SPS Retro) (Session TM4.3).

SPS retrograde for Mission 204A is accomplished from the perigee of a slightly elliptical orbit (105/124 n mi) with recovery near Hawaii in the Pacific range. This training session is to provide crew experience in the real-time accomplishment of Mission 204A retrofire, entry, and recovery. Two runs are defined.

- Practice preparations (including orbital measurement and IMU alignment) for and accomplishment of Mission 204A retrofire (G&N mode), entry (G&N mode), and recovery
- Practice system preparations for and accomplishment of Mission 204A retrofire (SCS mode), entry (SCS mode), and recovery.

3.4.13.4 Final Phase, Mission 204A (RCS Retro) (Session TM4.4).

Mission 204A (as defined in MSC Note 65-FM-58) includes RCS retrograde from orbit as a contingency backup procedure for SPS deorbit. The purpose of this training session is to provide crew experience in the real-time accomplishment of the 204A RCS deorbit maneuver. Runs are as follows:

- Practice preparations (including navigation and IMU alignment) for accomplishment of RCS retrofire from Mission 204A, entry (G&N mode), and recovery
- Practice system preparations for accomplishment of RCS retrofire from Mission 204A, entry (SCS mode), and recovery.

3.5 APOLLO OPERATIONS HANDBOOK.

The specific revision to the Apollo Operations Handbook (SM2A-03) that has been used in preparing this instructor handbook is that of October 15, 1965. However, that revision to the AOH has specifically excluded SCS and G&N procedures as TBSL. Present plans for the AOH do not include re-publication of SM2A-03 (with SCS and G&N procedures included) until April 15, 1966. This is, of course, too late for use in the preparation of the SE 012 revision to the AMS Instructor Handbook.

Therefore, in order to provide a complete instructor handbook for use with the simulator in April of 1966, it becomes necessary to reference and use SCS and G&N procedures from Apollo Task Analysis, MIT Reports, Apollo Engineering reports and letters, etc. Procedures for SCS and G&N operation will, wherever possible, be the reference data to ultimately be used in preparing the next iteration of the Apollo Operations Handbook. Interim procedures sources for SPS abort and RCS retrograde are not identified at the time this handbook goes to press.

Since SM2A-03 (October 15, 1965) is to be the crew procedures reference (as augmented by other data of SCS and G&N) during training on the AMS, it is necessary to specifically define which portions of the crew procedures contained therein are to be used by the crew in each increment of training described in this instructor handbook. Therefore, since all specific training increments (except for exercise TM4) are, by definition, with respect to the nominal training mission, crew procedures from SM2A-03 (and other data on G&N) must be outlined for accomplishment of the training mission. Such is the purpose of the following paragraphs and related tables.

3.5.1 CREW PROCEDURES, BASIC NOMINAL TRAINING MISSION.

The basic nominal training mission is described in paragraph 3.2.2, table 3-8, and figures 3-37, 3-38, and 3-39 of this handbook. The basic

nominal mission, or portions thereof, is used in the following training sessions.

PT1.2	PT2.2	PT4.2	MT1.2	MT4.2
PT1.3	PT2.3	PT5.1	MT1.3	MT4.3
PT1.4	PT2.4	PT5.2	MT2.1	TM1.1
PT1.5	PT3.2	PT5.3	MT2.2	TM1.3
PT2.1	PT4.1	MT1.1	MT4.1	

An outline of SM2A-03 (and SID 65-1231A) procedures for accomplishing the basic nominal mission in accordance with "Mission A" in table 3-8 is provided as table 3-10.

Table 3-10. Crew Procedures, Basic Nominal Training Mission

Mission Time	Mission Event Crew Activity		SM2A-03 Paragraph (15 October 1965)	IOS Data Sheet(s) See Para. 3.6.5	Title
	Table 3-7	Table 3-8			
	S1		8.1		Prelaunch
					Astronaut ingress
				P1.1/P3.1	Initial checks
				P1.2/P2.1/P3.2	System verification
					Hatch installation and C/M purge and leak check
				P1.3/P2.2/P3.3	Launch preparation
-00:01:00	S2	1			LAUNCH BOOST
-00:00:04			8.2	A1.1/A2.1/A3.1	Ascent and initial orbit
					S-IB engine ignition
					Lift-off
					Roll-pitch maneuver
					Maximum dynamic pressure
					S-IVB boost
					Launch escape tower jettison
					Maximum altitude
00:10:02	S3	2			ORBIT INSERTION
					Orbital insertion
00:12:02		3			START FIRST ORBIT
					Receive orbit confirmation
00:12:30		3.1			Programed S-IVB roll maneuver
00:15:00		4.1	8.2	01.1/03.1/04.1	Initial orbit procedures
00:20:00		4.2			NAVIGATION SIGHTINGS
			8.3.1.1	GN4.01	G&N system activation
			8.3	GN4.03/GN4.09/ GN4.49/GN4.50	Landmark sightings
00:42:00		4.4			Programed S-IVB roll maneuver
	S4				COARSE AND FINE ALIGN IMU
00:48:00		4.5/4.6	8.3/8.3	GN4.03/GN4.04/ GN4.06/GN4.49/ GN4.50	IMU alignment (coarse and fine)
01:00:00			8.3.1.6	EC3.01	ECS hourly flight verification
			8.3.1.5	EP3.10	EPS periodic verification
			8.3.1.4	RC2.02	RCS periodic verification
			8.3.1.3	SP3.01/SP3.02	SPS periodic verification
01:05:00			8.3.1.5	EP3.05/EP3.06	Fuel cell purge
01:20:00		4.9			Programed S-IVB roll maneuver

Table 3-10. Crew Procedures, Basic Nominal Training Mission (Cont)

Mission Time	Mission Event Crew Activity		SM2A-03 Paragraph (15 October 1965)	IOS Data Sheet(s) See Para. 3.6.5	Title
	Table 3-7	Table 3-8			
01:30:00		5.2		01.3/03.3	Jettison S-IVB
01:30:00		5.4			INITIATE TWO-MAN EXTENDED MISSION OPERATIONS
01:30:00	S5	5.5			NAVIGATION SIGHTINGS
			8.3	GN4.02/GN4.03/ GN4.09/GN4.49/ GN4.50	Landmark sighting
01:40:02		6			START SECOND ORBIT
01:52:00	S6	6.2			NAVIGATION SIGHTINGS
			8.3	GN4.03/GN4.09 GN4.49/GN4.50	Landmark sighting
02:15:00		7.2		01.2/03.2	BEGIN MINIMUM ACTIVITY OPERATIONS
				EC3.01	ECS hourly flight verification
				EC3.10	EPS periodic verification
				RC2.02	RCS periodic verification
				SP3.01/SP3.02	SPS periodic verification
02:25:00	S7	7.3		01.2/03.2	TERMINATE MINIMUM ACTIVITY OPERATIONS
					TERMINATE TWO-MAN EXTENDED MISSION PROCEDURES
02:25:00		7.6	8.3	GN4.01/GN4.03/ GN4.04/GN4.49	IMU orientation determination
02:46:00		8.1			FINE ALIGN IMU AND SCS
			8.3.2	GN4.03/GN4.07 GN4.49/GN4.50	IMU fine alignment
			8.3.1.7.3	TC3.04	Activate VHF-FM
			8.3.1.7.4	TC3.02	Activate VHF-AM
03:00:00	S8		8.3.1.6	EC3.01	ECS hourly flight verification
			8.3.1.5	EP3.10	EPS periodic verification
			8.3.1.4	RC2.02	RCS periodic verification
			8.3.1.3	SP3.01/SP3.02	SPS periodic verification
03:01:00					NAVIGATION SIGHTINGS
		8.2		GN4.03/GN4.09 GN4.49/GN4.50	Landmark sightings
03:08:02		9			START THIRD ORBIT
			8.3.1.5	EP3.07	Battery charging
			8.3.1.7.3	TC3.04	Deactivate VHF-FM
			8.3.1.7.1	TC3.02	Deactivate VHF-AM

Table 3-10. Crew Procedures, Basic Nominal Training Mission (Cont)

Mission Time	Mission Event Crew Activity		SM2A-03 Paragraph (15 October 1965)	IOS Data Sheet(s) See Para. 3.6.5	Title
	Table 3-7	Table 3-8			
	S9		8.3.1.6	EC3.05	Cabin cold-soak operations
03:50:00		10.3			FINE ALIGN IMU AND SCS
			8.3.2	GN4.02/GN4.03/ GN4.07/GN4.49/ GN4.50	IMU fine alignment
04:40:00		14			TOUCHDOWN
			8.5	R1.1/R2.1/R3.1/ R4.1	Post-touchdown

3.5.2 CREW PROCEDURES, NOMINAL MISSION - PLANE CHANGES.

The nominal mission, plane changes is described in paragraph 3.2.3, table 3-8, and figures 3-37, 3-38, and 3-39. The nominal mission, plane changes, or portions thereof, is used in the following training sessions:

PT1.1 PT3.1 MT3.1 TM2.1 TM2.2

An outline of SM2A-03 (and SID 65-1231A) procedures for accomplishing the nominal mission, plane changes, in accordance with "Mission B" in table 3-8 is provided as table 3-11.

Table 3-11. Crew Procedures, Nominal Mission — Plane Changes

Mission Time	Mission Event Crew Activity Table 3-7	Mission Event Crew Activity Table 3-8	SM2A-03 Paragraph (15 October 1965)	IOS Data Sheet(s) See Para. 3.6.5	Title
N/A	S1		8.1		Prelaunch
					Astronaut ingress
				P1.1/P3.1	Initial checks
				P1.2/P2.1/P3.2	System verification
					Hatch installation and C/M purge and leak check
				P1.3/P2.2/P3.3	Launch preparation
-00:01:00	S2	1			LAUNCH BOOST
-00:00:04			8.2		Ascent and initial orbit
					S-IB engine ignition
					Lift-off
					Roll-pitch maneuver
					Maximum dynamic pressure
					S-IVB boost
					Launch escape tower jettison
					Maximum altitude
00:10:02	S3	2			ORBIT INSERTION
					Orbital insertion
00:12:02		3			START FIRST ORBIT
00:15:00		4			JETTISON S-IVB
00:15:00		4.1	8.2	01.1/03.1/04.1	Initial orbit procedures
00:20:00		4.2			NAVIGATION SIGHTINGS
			8.3.1.1	GN4.01	G&N system activation
			8.3.2	GN4.03/GN4.09 GN4.49/GN4.50	Landmark sighting
Prior to 00:40:00		4.3			INHIBIT DAY TERMINATOR
00:40:00	S4	4.6			FINE ALIGN IMU AND SCS
			8.3	GN4.03/GN4.07 GN4.49/GN4.50	IMU fine alignment
00:55:00		4.7			NAVIGATION SIGHTINGS
			8.3	GN4.03/GN4.09 GN4.49/GN4.50	Landmark sightings
01:00:00			8.3.1.6	EC3.01	ECS hourly flight verification
			8.3.1.5	EP3.10	EPS periodic verification
			8.3.1.4	RC2.02	RCS periodic verification
			8.3.1.3	SP3.01/SP3.02	SPS periodic verification

Table 3-11. Crew Procedures, Nominal Mission — Plane Changes (Cont)

Mission Time	Mission Event Crew Activity		SM2A-03 Paragraph (15 October 1965)	IOS Data Sheet(s) See Para. 3.6.5	Title
	Table 3-7	Table 3-8			
			8.3.1.1	GN4.02	G&N periodic verification
01:05:00			8.3.1.5	EP3.05/EP3.06	Fuel cell purge
01:11:00		4.8			PREPARATION FOR DELTA V
			8.3	GN4.02/GN4.03/ GN4.07/GN4.12/ GN1.13/GN1.40/ GN1.44/GN4.49/ GN4.50/SP3.04	G&N Delta V mode
			8.3.1.7.2	TC3.21	C-band tracking and ranging, activate
01:17:44		5			DELTA V
					G&N Delta V mode
01:19:00			8.3.1.5	EP3.07	Battery charging
			8.3.1.7.2	TC3.21	C-band tracking and ranging deactivate
01:19:00		5.1			FINE ALIGN IMU AND SCS
			8.3	GN4.03/GN4.07 GN4.49/GN4.50	IMU fine alignment
01:30:00	S5	5.5			NAVIGATION SIGHTINGS
			8.3	GN4.03/GN4.09 GN4.49/GN4.50	Landmark sighting
01:38:02		6			START SECOND ORBIT
01:52:00	S6	6.2			NAVIGATION SIGHTING
			8.3	GN4.02/GN4.03/ GN4.09/GN4.49/ GN4.50	Landmark sighting
				EC3.01	ECS hourly flight verification
				EP3.10	EPS periodic verification
				RC2.02	RCS periodic verification
				SP3.01/SP3.02	SPS periodic verification
02:03:00	S7	7.1			FINE ALIGN IMU AND SCS
			8.3	GN4.03/GN4.04/ GN4.07/GN4.49/ GN4.50	IMU fine alignment
			8.3.1.7.3	TC3.04	Activate VHF-FM
			8.3.1.7.1	TC3.02	Activate VHF-AM
02:40:00		7.8			PREPARATION FOR DELTA V
			8.3	GN4.02/GN4.03/ GN4.07/GN4.12/ GN1.13/GN1.40/ GN1.44/GN4.49/ GN4.50/SP3.04	G&N delta V mode

Table 3-11. Crew Procedures, Nominal Mission — Plane Changes (Cont)

Mission Time	Mission Event Crew Activity		SM2A-03 Paragraph (15 October 1965)	IOS Data Sheet(s) See Para. 3.6.5	Title
	Table 3-7	Table 3-8			
			8.3.1.7.2	TC3.21	C-band tracking and ranging, activate
02:45:33		8			DELTA V
			8.3		G&N delta V mode
			8.3.1.7.2	TC3.21	Deactivate C-band tracking and ranging
02:46:00		8.1			FINE ALIGN IMU AND SCS
			8.3	GN4.03/GN4.07 GN4.49/GN4.50	IMU fine alignment
03:01:00	S8	8.2			NAVIGATION SIGHTINGS
			8.3	GN4.02/GN4.03/ GN4.09/GN4.49/ GN4.50	Landmark sightings
			8.3.1.6	EC3.01	ECS hourly flight verification
			8.3.1.5	EP3.10	EPS periodic verification
			8.3.1.4	RC2.02	RCS periodic verification
			8.3.1.3	SP3.01/SP3.02	SPS periodic verification
			8.3.1.5	EP3.07	Battery charging
03:08:02		9			START THIRD ORBIT
			8.3.1.5	EC3.05	Cabin cold-soak operations
03:50:00	S9	10.3			FINE ALIGN IMU AND SCS
			8.3.2.1.2	GN4.02/GN4.03/ GN4.07/GN4.49/ GN4.50	IMU fine alignment
04:00:00	S10 S11	10.4			PREPARATION FOR RETROFIRE
					Deorbit and Entry
			8.4/8.3.2.4.1	E1.1	Deorbit delta V procedures
				E3.1/E4.1	G&N delta V mode
04:16:00		11			DELTA V
			8.4	E1.2/E2.1/E3.2	Postdelta V operations
04:16:18	S12	11.1			PREPARATION FOR S/M-C/M SEPARATION
					Preseparation operations
04:19:00		12			C/M-S/M SEPARATION
				E1.3/E2.2/E3.3	Postseparation operations
04:19:00	S13	12.1			PREPARATION FOR ENTRY
					Pre-entry operations

Table 3-11. Crew Procedures, Nominal Mission — Plane Changes (Cont)

Mission Time	Mission Event Crew Activity		SM2A-03 Paragraph (15 October 1965)	IOS Data Sheet(s) See Para. 3.6.5	Title
	Table 3-7	Table 3-8			
04:23:00		13			.05 G START ENTRY
					Entry operations
04:23:00		13.1			MONITOR-CONTROL ENTRY
04:33:00		13.2			MONTIRO-CONTROL CHUTE
04:40:00		14		E1.4/E3.4	ELS arming
					TOUCHDOWN
				R1.1/R2.1/R3.1/ R4.1	Post-touchdown

3.5.3 CREW PROCEDURES, NOMINAL MISSION - HOHMANN TRANSFERS.

The nominal mission, Hohmann transfers is described in paragraph 3.2.4, table 3-8, and figures 3-37, 3-38, and 3-39. The nominal mission, Hohmann transfers is used in the following training sessions:

MT3.2 TM3.1 TM3.2

An outline of SM2A-03 (and SID 65-1231A) procedures for accomplishing the nominal mission, Hohmann transfers in accordance with "Mission C" in table 3-8 is provided in table 3-12.

Table 3-12. Crew Procedures, Nominal Mission, Hohmann Transfers

Mission Time	Mission Event Crew Activity		SM2A-03 Paragraph (15 October 1965)	IOS Data Sheet(s) See Para. 3.6.5	Title
	Table 3-7	Table 3-8			
N/A	S1		8.1		Prelaunch
					Astronaut ingress
				PT1.1/P3.1	Initial checks
				PT1.2/P2.1/P3.2	System verification
					Hatch installation and C/M purge and leak check
				P1.3/P2.2/P3.3	Launch preparation
-00:01:00	S2	1			LAUNCH BOOST
-00:00:04			8.2		Ascent and initial orbit
					S-IB engine ignition
					Lift-off
					Roll-pitch maneuver
					Maximum dynamic pressure.
					S-IVB boost
					Launch escape tower jettison
					Maximum altitude
00:10:02	S3	2			ORBIT INSERTION
					Orbital insertion
00:12:02		3			START FIRST ORBIT
00:15:00		4			JETTISON S-IVB
00:15:00		4.1	8.2	01.1/03.1/04.1	Initial orbit procedures
00:20:00		4.2			NAVIGATION SIGHTINGS
			8.3.1.1/ 8.3.2.2.1	GN4.02/GN4.03/ GN4.09/GN4.49/ GN4.50	Landmark sightings
Prior to 00:40:00		4.3			INHIBIT DAY TERMINATOR
00:40:00	S4	4.6			FINE ALIGN IMU AND SCS
			8.3.2.1.2	GN4.03/GN4.04/ GN4.07/GN4.49/ GN4.50	IMU fine alignment
00:55:00		4.7			NAVIGATIONAL SIGHTINGS
			8.3.2.2.1	GN4.02/GN4.03/ GN4.09/GN4.49/ GN4.50	Landmark sighting
01:00:00			8.3.1.6	EC3.01	ECS hourly flight verification
			8.3.1.5	EP3.10	EPS periodic verification

Table 3-12. Crew Procedures, Nominal Mission, Hohmann Transfers (Cont)

Mission Time	Mission Event Crew Activity		SM2A-03 Paragraph (15 October 1965)	IOS Data Sheet(s) See Para. 3.6.5	Title
	Table 3-7	Table 3-8			
			8.3.1.4	RC3.02	RCS periodic verification
			8.3.1.3	SP3.01/SP3.02	SPS periodic verification
01:05:00			8.3.1.5	EP3.05/EP3.06	Fuel cell purge
01:11:00		4.8			PREPARATION FOR DELTA V
			8.3.2.4.1	GN4.02/GN4.03/ GN4.04/GN4.07/ GN4.12/GN1.13/ GN1.40/GN1.44/ SP3.04	G&N delta V mode
			8.3.1.7.2	TC3.21	C-band tracking and ranging, activate
01:17:44		5			DELTA V
			8.3.2.4.1		G&N delta V mode
01:19:00			8.3.1.5	EP3.07	Battery charging
			8.3.1.7.2	TC3.21	C-band tracking and ranging, deactivate
01:19:00		5.1			FINE ALIGN IMU AND SCS
			8.3.2.1.2	GN4.03/GN4.04/ GN4.07/GN4.49/ GN4.50	IMU fine alignment
01:30:00	S5	5.5			NAVIGATION SIGHTINGS
			8.3.2.2.1	GN4.03/GN4.09/ GN4.49/GN4.50	Landmark sighting
01:40:02		6			START SECOND ORBIT
01:40:00	S6	6.1			FINE ALIGN IMU AND SCS
			8.3.2.1.1	GN4.03/GN4.07 GN4.49/GN4.50	IMU fine alignment
				EC3.01	ECS hourly flight verification
				EP3.10	EPS periodic verification
				RC2.02	RCS periodic verification
				SP3.01/SP3.02	SPS periodic verification
			8.3.1.7.3	TC3.04	Activate VHF-FM
			8.3.1.7.1	TC3.02	Activate VHF-AM
01:57:00		6.3			PREPARATION FOR DELTA V
			8.3	GN4.02/GN4.03/ GN4.04/GN4.07/ GN4.49/GN4.50/ SP3.04	G&N delta V mode
			8.3.1.7.2	TC3.21	C-band tracking and ranging activate

Table 3-12. Crew Procedures, Nominal Mission, Hohmann Transfers (Cont)

Mission Time	Mission Event Crew Activity		SM2A-03 Paragraph (15 October 1965)	IOS Data Sheet(s) See Para. 3.6.5	Title
	Table 3-7	Table 3-8			
Prior to 02:10:00		6.4			INHIBIT BAY TERMINATOR
02:02:26		7	8.3		DELTA V
					G&N delta V mode
				TC3.21	Deactivate C-band tracking and ranging
02:03:00		7.1	8.1	GN4.02/GN4.03/ GN4.04/GN4.07/ GN4.49/GN4.50	FINE ALIGN IMU AND SCS
02:25:00	S7	7.5			NAVIGATION SIGHTINGS
			8.3.2.2.1	GN4.02/GN4.03/ GN4.09/GN4.49/ GN4.50	Landmark sightings
			8.3.1.7.3	TC3.04	Activate VHF-FM
			8.3.1.7.1	TC3.02	Activate VHF-AM
02:40:00		7.9			PREPARATION FOR DELTA V
			8.3.2.7.1	GN4.02/GN4.03/ GN4.04/GN4.07/ GN4.49/GN4.50/ SP4.03	G&N delta V mode
			8.3.1.7.2	TC3.21	C-band tracking and ranging, activate
02:45:33		8			DELTA V
			8.3.2.4.1		G&N delta V mode
				EP3.07	Battery charging
				TC3.21	C-band tracking and ranging, deactivate
02:46:00	S8	8.1			FINE ALIGN IMU AND SCS
			8.3.2.1.2	GN4.03/GN4.04/ GN4.07/GN4.49/ GN4.50	IMU fine alignment
03:01:00		8.2			NAVIGATION SIGHTINGS
			8.3.2.2.1	GN4.03/GN4.09/ GN4.49/GN4.50	Landmark sightings
03:08:02		9			START THIRD ORBIT
			8.3.1.6	EC3.01	ECS hourly flight verification
			8.3.1.5	EP3.10	EPS periodic verification
			8.3.1.4	RC2.02	RCS periodic verification
			8.3.1.3	SP3.01/SP3.02	SPS periodic verification
			8.3.1.1	GN4.02	G&N periodic verification

Table 3-12. Crew Procedures, Nominal Mission, Hohmann Transfers (Cont)

Mission Time	Mission Event Crew Activity		SM2A-03 Paragraph (15 October 1965)	IOS Data Sheet(s) See Para. 3.6.5	Title
	Table 3-7	Table 3-8			
03:25:00		9.2			PREPARATION FOR DELTA V
			8.3.2.4.1	GN4.03/GN4.04/ GN4.07/GN4.49/ GN4.50/SP3.04	G&N delta V mode
			8.3.1.7.2	TC3.21	C-band tracking and ranging, activate
03:30:02		10			DELTA V
			8.3.2.4.1		G&N delta V mode
			8.3.1.5	EP3.07	Battery charging
			8.3.1.7.2	TC3.21	C-band tracking and ranging, deactivate
Prior to 03:34:00		10.1			INHIBIT DAY TERMINATOR
03:36:00	S9	10.2			NAVIGATION SIGHTINGS
			8.3	GN4.02/GN4.09 GN4.49/GN4.50	Landmark sightings
			8.3.1.7.3	TC3.04	Deactivate VHF-FM
			8.3.1.7.1	TC3.02	Deactivate VHF-AM
			8.3.1.5	EC3.05	Cabin cold-soak operations
03:50:00		10.3			FINE ALIGN IMU AND SCS
			8.3.2.1.2/ 8.3.2.1.3	GN4.02/GN4.03/ GN4.04/GN4.07/ GN4.49/GN4.50	IMU fine alignment
04:00:00	S10 S11	10.4			PREPARATION FOR RETROFIRE
					Deorbit and Entry
			8.4/8.3.2.4.1	E1.1	Deorbit delta V procedures
				E3.1/E4.1	G&N delta V mode
04:16:00 04:22:00		11			DELTA V
				E1.2/E2.1/E3.2	Postdelta V operations
04:16:18	S12	11.1			PREPARATION FOR S/M-C/M SEPARATION
					Preseparation operations
04:19:00		12			C/M-S/M SEPARATION
				E1.3/E2.2/E3.3	Postseparation operations
04:19:00	S13	12.1			PREPARATION FOR ENTRY
					Pre-entry operations
04:23:00		13			.05 G START ENTRY
					Entry operations

Table 3-12. Crew Procedures, Nominal Mission, Hohmann Transfers (Cont)

Mission Time	Mission Event Crew Activity		SM2A-03 Paragraph (15 October 1965)	IOS Data Sheet(s) See Para. 3.6.5	Title
	Table 3-7	Table 3-8			
04:23:00		13.1			MONITOR-CONTROL ENTRY
04:33:00		13.2			MONITOR-CONTROL PARACHUTE DEPLOYMENT AND ELS
04:40:00		14		E1.4/E3.4	ELS arming
04:40:00					TOUCHDOWN
			8.5	R1.1/R2.1/R3.1/ R4.1	Post-touchdown

3.5.4 CREW PROCEDURES, NOMINAL MISSION - TRANSPOSITION AND DOCKING.

The nominal mission, transposition and docking is described in paragraph 3.2.5, table 3-8, and figures 3-37, 3-38, 3-39. The nominal mission, transposition and docking is used in the following training sessions:

PT1.1 PT1.2 MT2.3 TM1.2

An outline of SM2A-03 (and SID 65-1231A) procedures for accomplishing the nominal mission, transposition and docking in accordance with "Mission D" in table 3-8 is provided in table 3-13.

Table 3-13. Crew Procedures, Nominal Mission, Transposition and Docking

Mission Time	Mission Event Crew Activity		SM2A-03 Paragraph (15 October 1965)	IOS Data Sheet(s) See Para. 3.6.5	Title
	Table 3-7	Table 3-8			
	S1		8.1		Prelaunch
					Astronaut ingress
				P1.1/P3.1	Initial checks
				P1.2/P2.1/3.2	System verification
					Hatch installation and C/M purge and leak check
				P1.3/P2.2/P3.3	Launch preparation
-00:01:00	S2	1			LAUNCH BOOST
-00:00:04			8.2	A1.1/A2.1/A3.1	Ascent and initial orbit
					S-IB engine ignition
					Lift-off
					Roll-pitch maneuver
					Maximum dynamic pressure
					S-IVB boost
					Launch escape tower jettison
					Maximum altitude
00:10:02	S3	2			ORBIT INSERTION
					Orbital insertion
00:12:02		3			START FIRST ORBIT
					Receive orbit confirmation
00:12:30		3.1			Programed S-IVB roll maneuver
00:15:00		4.1	8.2	01.1/03.1/04.1	Initial orbit procedures
00:20:00		4.2			NAVIGATION SIGHTINGS
			8.3.1.1	GN4.01	G&N system activiation
			8.3	GN4.03/GN4.09/ GN4.49/GN4.50	Landmark sighting
00:42:00		4.4			Programed S-IVB roll maneuver
	S4				COARSE AND FINE ALIGN IMU
00:48:00		4.5/4.6	8.3/8.3	GN4.03/GN4.04/ GN4.06/GN4.49/ GN4.50	IMU alignment (coarse and fine)
01:00:00			8.3.1.6	EC3.01	ECS hourly flight verification
			8.3.1.5	EP3.10	EPS periodic verification
			8.3.1.4	RC2.00	RCS periodic verification
			8.3.1.3	SP3.00/SP3.02	SPS periodic verification
01:05:00			8.3.1.5	EP3.05/EP3.06	Fuel cell purge
01:20:00		4.9			Programed S-IVB roll maneuver

Table 3-13. Crew Procedures, Nominal Mission, Transposition and Docking (Cont)

Mission Time	Mission Event Crew Activity		SM2A-03 Paragraph (15 October 1965)	IOS Data Sheet(s) See Para. 3.6.5	Title
	Table 3-7	Table 3-8			
01:30:00		5.2		01.3/03.3	Jettison S-IVB
01:30:00	S5	5.3			Perform transposition and docking
01:40:02		6			START SECOND ORBIT
				EC3.01	ECS hourly flight verification
				EP3.10	EPS periodic verification
				RC2.02	RCS periodic verification
				SP3.01/SP3.02	SPS periodic verification
02:25:00		7.4			Secure from transposition and docking maneuvers
02:30:00	S7	7.7			STAR/LUNAR NAVIGATION
			8.3.2.2.1	GN4.02/GN4.03 GN4.10	Lunar landmark sightings
02:40:00					
02:46:00		8.1			FINE ALIGN IMU AND SCS
			8.3	GN4.03/GN4.04/ GN4.07/GN4.49/ GN4.50	IMU fine alignment
03:01:00	S8	8.2			NAVIGATION SIGHTINGS
			8.3	GN4.02/GN4.03/ GN4.09/GN4.49/ GN4.50	Landmark sightings
03:06:02		9			START THIRD ORBIT
			8.3.1.6	EC3.01	ECS hourly flight verification
			8.3.1.5	EP3.10	EPS periodic verification
			8.3.1.4	RC2.02	RCS periodic verification
			8.3.1.3	SP3.01/SP3.02	SPS periodic verification
			8.3.1.5	EP3.07	Battery charging
			8.3.1.7.3	TC3.04	Activate VHF-FM
			8.3.1.7.1	TC3.01	Activate VHF-AM
			8.3.1.6	EC3.05	Cabin cold-soak operations
03:50:00	S9	10.3			FINE ALIGN IMU AND SCS
			8.3.2	GN4.03/GN4.04/ GN4.07/GN4.49/ GN4.50	
04:00:00	S10 S11	10.4			PREPARATION FOR RETROFIRE

Table 3-13. Crew Procedures, Nominal Mission, Transposition and Docking (Cont)

Mission Time	Mission Event Crew Activity		SM2A-03 Paragraph (15 October 1965)	IOS Data Sheet(s) See Para. 3.6.5	Title
	Table 3-7	Table 3-8			
					Deorbit and Entry
			8.4.1/13.2	E1.1	Deorbit delta V procedures
				E3.1/E4.1	G&N delta V mode
04:16:00		11			DELTA V
			8.4	E1.2/E2.1/E3.2	Postdelta V operations
04:16:18	S12	11.1			PREPARATION FOR S/M-C/M SEPARATION
					Preseparation operations
04:19:00		12			C/M-S/M SEPARATION
				E1.3/E2.2/E3.3	Postseparation operations
04:19:00	S13	12.1			PREPARATION FOR ENTRY
					Pre-entry operations
04:23:00		13			.05 G START ENTRY
					Entry operations
04:23:00		13.1			MONITOR-CONTROL ENTRY
04:33:00		13.2			MONITOR-CONTROL PARACHUTE DEPLOYMENT AND ELS
04:40:00		14		E1.4/E3.4	ELS arming
					TOUCHDOWN
			8.5	R1.1/R2.1/R3.1/R4.1	Post-touchdown

3.5.5 VARIATIONS IN NOMINAL MISSION.

The AMS syllabus provided in this section of the instructor handbook requires three variations of the nominal training mission. The three variations are as follows:

- Aborts from suborbital trajectory
- Early mission termination form orbit
- RCS retrograde from entry.

3.5.5.1 Suborbital Aborts.

Suborbital aborts and related crew procedures are the subject of section 9.2 of the 15 October revision to the AOH. However, that particular revision to the AOH includes only LES aborts and designates SPS abort to orbit as TBSL. Procedures to be used in the AMS for SPS abort have not been identified at this time.

In the AMS all aborts (except pad abort) are initiated from the preprogramed launch-boost tape. At the point of abort initiation, the preprogramed characteristics of the tape are discontinued and a fuel simulation of the abort is accomplished. Methods of abort initiation are defined in section 1 (AMS Operation) of Volume II of this handbook. Training sessions involving suborbital aborts are as follows:

PT 5.2 LES aborts
PT 5.3 SPS aborts
MT 1.2 LES aborts
MT 1.3 SPS aborts.

3.5.5.2 Early Mission Termination from Orbit.

Early mission termination is used in conjunction with the nominal training mission for two purposes. The first is to conclude training mission during the second orbit when procedures to be practiced do not require the elapsed time of the third orbit. The second purpose is to provide the crew with training in recognizing requirements for and accomplishing early mission termination because of critical spacecraft malfunctions and/or other contingencies. Training sessions involving early mission termination are as follows:

MT4.3 Early mission termination
TM1.3 Abortive early mission termination
TM3.1 Transfer to 105/130-n mi elliptical orbit
TM3.2 Transfer to 130-n mi circular orbit.

Procedures for early mission termination are the same as for entry on the third orbit of the nominal mission.

3.5.5.3 RCS Retrograde for Entry.

Plans for Mission 204A include a capability to accomplish retrograde with the spacecraft reaction control system. The 15 October revision does not include procedures for RCS retrograde, and a course for such procedures for use in the AMS has not been identified at this time. Training sessions involving RCS retrograde are as follows:

PT3.2 Retrograde from earth orbit
PT4.2 Entry contingencies
MT4.2 RCS deorbit and entry procedures

RCS retrograde from orbit requires that preparation for retrofire begin at an earlier point in orbit than for SPS abort in order to accomplish recovery at a given point on the earth surface. Trajectory data and geographic trace information for RCS retrograde is provided in figures 3-27, 3-28, and 3-33 through 3-36. System preparation for and accomplishment of RCS retrograde followed by separation, entry, and recovery takes approximately one hour and 10 minutes. Therefore, in the nominal training mission it is necessary to accomplish final orbit measurement during the end of the second and the start of the third orbit (over Mexico and U.S., align the IMU (over the Atlantic) and initiate RCS retrograde at a mission time of approximately 3 hours and 45 minutes for Pacific Range recovery. For Atlantic Range recovery retrotime would be at about 1:45 at which time the IMU would be aligned over the Atlantic. Final orbit measurement would be over West Africa with RCS retrofire at about 2:20 over the Indian Ocean.

3.6 SCRIPT PREPARATION AND HANDBOOK CONTENTS.

Volume II of this handbook contains material to be used in preparing instructor scripts for use at the IOS. The entire contents of Volume II is looseleaf bound to facilitate copying and separate binding as instructor lesson plan booklets. The material is organized to permit preparation of a separate booklet for each training session in the syllabus. Figure 3-40 outlines the contents of both volumes and illustrates the manner in which instructor scripts are prepared. Session data sheets, initialization data sheets, and IOS date sheets are used to make up the instructor script. Selected portions of the AMS operating procedures may also be copied and included. Other sections of both Volume I and Volume II contain material required to completely comprehend the syllabus and to operate the simulator in the training accomplishment of the syllabus.

3.6.1 AMS OPERATION (Ref Section 1, Volume II).

Section 1 of Volume II contains instructions for operating the Apollo Mission Simulator. Three types of procedural information are provided. The first of these is text and figures required to explain how specific tasks are performed on individual equipment units. The second type of procedure is systems checklists. These checklists are step-by-step outlines for the preparation and use of each simulator system. The third type of procedure

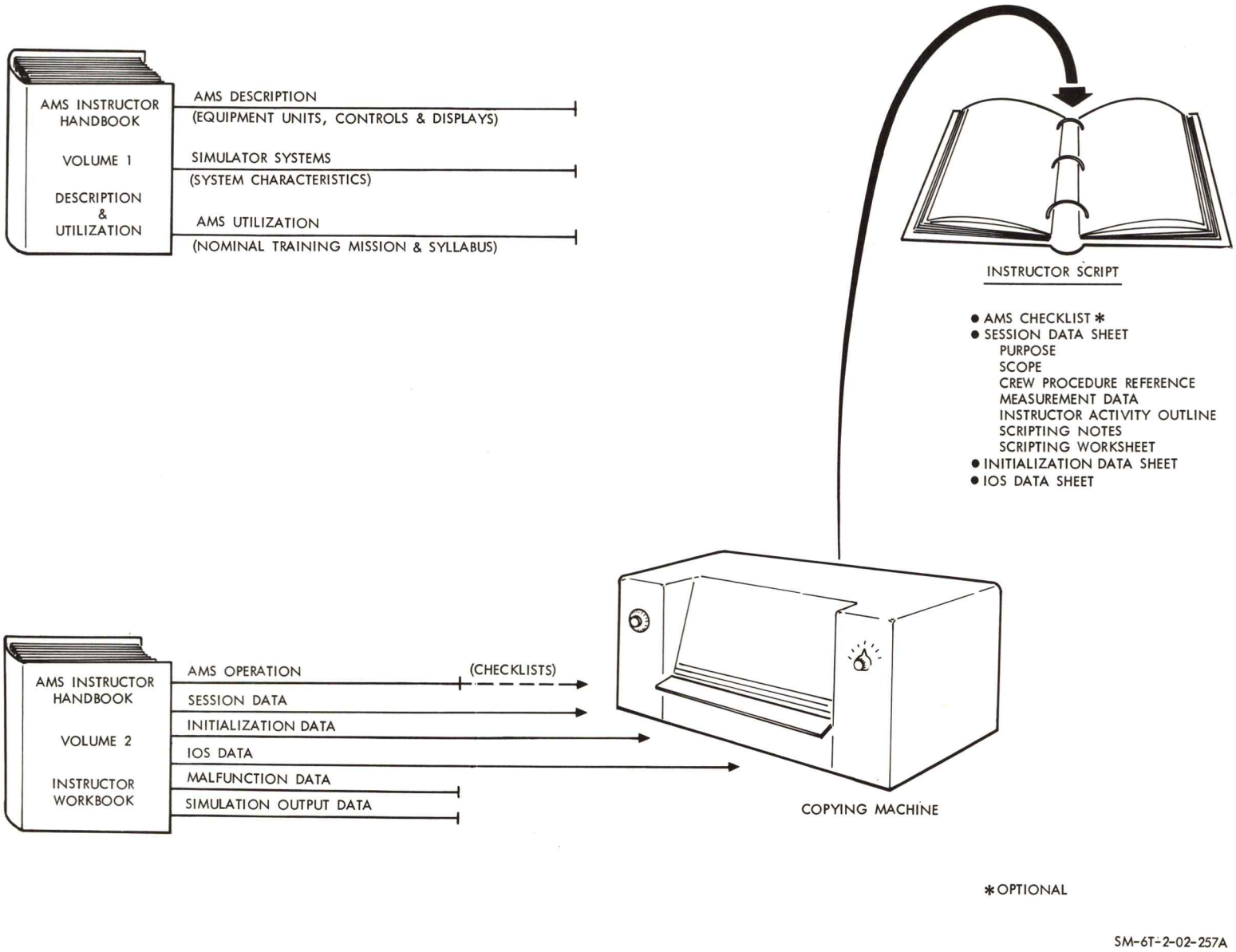

Figure 3-40. Instructor Script Preparation

is simulation complex checklists. These checklists are abbreviated form equivalents to the unit procedures and system checklists that can be compiled into single continuous checklists for use in preparing and using the simulator in specific training applications. Simulator complex checklists are prepared in a format that is suitable for copying, appropriate annotation, and inclusion in instructor scripts.

3.6.2 SCRIPT PREPARATION.

Prior to making use of the scripting material contained in Volume II of this handbook, the instructor-operator should be familiar with the entire contents of Volume I and section 1 of Volume II. He should also be familiar with the procedures contained in SM2A-03 (and SID 65-1231A).

When the instructor-operator is ready to use the simulator, he will review the syllabus provided in this section to select a specific training session for accomplishment. Information in section 2 (Simulator Systems) and section 3 (AMS Utilization) of this volume, along with the contents of the AOH (and SID 65-1231A) will be used as required to supplement the brief session descriptions.

3.6.3 SESSION DATA SHEETS.

When the instructor-operator has selected a training session from the syllabus provided in this section of the instructor handbook, then refers to section 2 (Session Data) of Volume II. This section contains a separate data sheet (actually comprised of a number of pages) for each training session defined in the syllabus. The session data sheet is comprised of seven parts as follows:

Purpose. A brief statement of the training purpose for the specified training session with reference to the syllabus

Scope. A brief definition of the overall scope of crew activity to be accomplished in the session (including definition of each run) with reference to the nominal training mission

Crew Procedures Reference. Specific identification of those procedures in SM2A-03 (and other interim procedures references)

Measurement Data. A suggested set of parameters to be transcribed during the session with specific reference to the simulation output table provided in section 6 of Volume II

Instructor Activity Outline. An outline of instructor-operator procedures used in preparing the AMS for and accomplishing the specified runs including initialization and malfunction section. Procedures referenced in the outline are those provided in section 1 (AMS Operation) of Volume II. Initialization points

are those defined in section 3 of Volume I (Nominal Training Mission). Malfunctions are those defined in section 5 of Volume II (Malfunction Data) and illustrated in section 2 of Volume I (Simulator Systems).

Scripting Notes. Identification of the initialization checklists from section 3 of Volume II (Initialization Data) and IOS data sheets from section 4 of Volume II (IOS Data) to be used during the session, plus any general instructions pertinent to their use.

Scripting Worksheet. Specific notes related to the contents of SM2A-03 (and other interim procedures references), the initialization checklists and the IOS data sheets as they are used in specific session. Notes are normally transposed in pencil from the scripting worksheet to the IOS data sheet to which they apply.

3.6.4 INITIALIZATION CHECKLISTS.

To accomplish simulation initialization at each of the various initialization points defined in section 3 of Volume I, it is necessary to first establish the appropriate spacecraft systems configuration checklists for use at each of the four spacecraft stations at various initialization points. Systems configuration data in these initialization checklists takes the form of a pictorial presentation of the desired SCM controls configuration as manifested at the IOS.

A sample initialization checklist is provided in figure 3-41 and table 3-14. The white highlighting of selected switch positions indicate the required setting for the specified initialization point. Those switches for which no highlighted position is provided have no mandatory setting for simulation initialization.

The use of the pictorial checklists along with tables offer the advantage of expediency. The IOS picture depicting the desired positions for SCM controls precludes any requirement to read through a list of all the items in a table. The instructor-operator simply checks his IOS displays against the picture and directs the crewmember to reset those controls that are in the wrong position. There is no requirement to discuss or consider those controls which are in the correct position, as indicated in the initialization checklist.

3.6.5 IOS DATA SHEETS.

Section 4 of Volume II contains an IOS data sheet for each crew procedure identified in SM2A-03 (and other interim procedures references). IOS data sheets are comprised of two or more pages containing both pictorial and tabular information on crew procedures as their performance is manifested at the IOS. Table 3-15 provides

a complete list of the IOS data sheets to be found in section 4 of Volume II, directly relates each data sheet to the procedures provided in SM2A-03 (or other source data), and includes a rough-time approximation for the accomplishment of each procedure. In using the time estimates, it should be remembered that time required to perform in a training environment is variable as a function of training accomplished. The time in table 3-15 is estimated for crewmembers who have completed part task training only.

A sample figure and corresponding table are provided in this section of the handbook as figure 3-42 and table 3-16, respectively. The pictorial data sheet makes use of the highlighted (white) switch position indications in the same manner as the initialization checklist. However, the IOS data sheet also makes use of the highlight technique to identify which indicators are to be monitored and the nature of the anticipated indication. The figures are overlayed with a series of numbers and other notations. The numbers are the sequence of procedure accomplishment as established in the tabular portion of the IOS data sheet. A number in a white field indicates monitor of an ON or otherwise active indicator; the numbers in black circles indicate monitor of an OFF. The arrows on various gages indicate anticipated nature of change. The asterisk in the "Step" column identifies those steps in the procedure which are described in the tabular portion of the data sheet, but do not have visible manifestation on the IOS.

The tabular data sheets list the steps from the crew procedures (with some variations due the differences between crew and instructor operator involvement) and related instructor-operator data. Definition of the columns in the table are as follows:

Step. Number in numerical sequence of the procedures, also correlating data for table and corresponding figure

Malfunctions. Blank column for instructor-operator notation of simulated malfunctions in accordance with session data sheets

Time. Blank column for compiling timeline of simulated missions or mission segments

Function. Description of crew procedure steps from SM2A-03 for other interim procedures data)

IOS Visibility-Action. Description of the manner in which the step (function) in the crew procedure is manifested to the instructor-operator and instructions for instructor-operator involvement (if any)

Notes. Space for explanatory notes or additional instructions (both typeset as part of the IOS data sheet and instructor-operator write-in in accordance with session data sheet instructions).

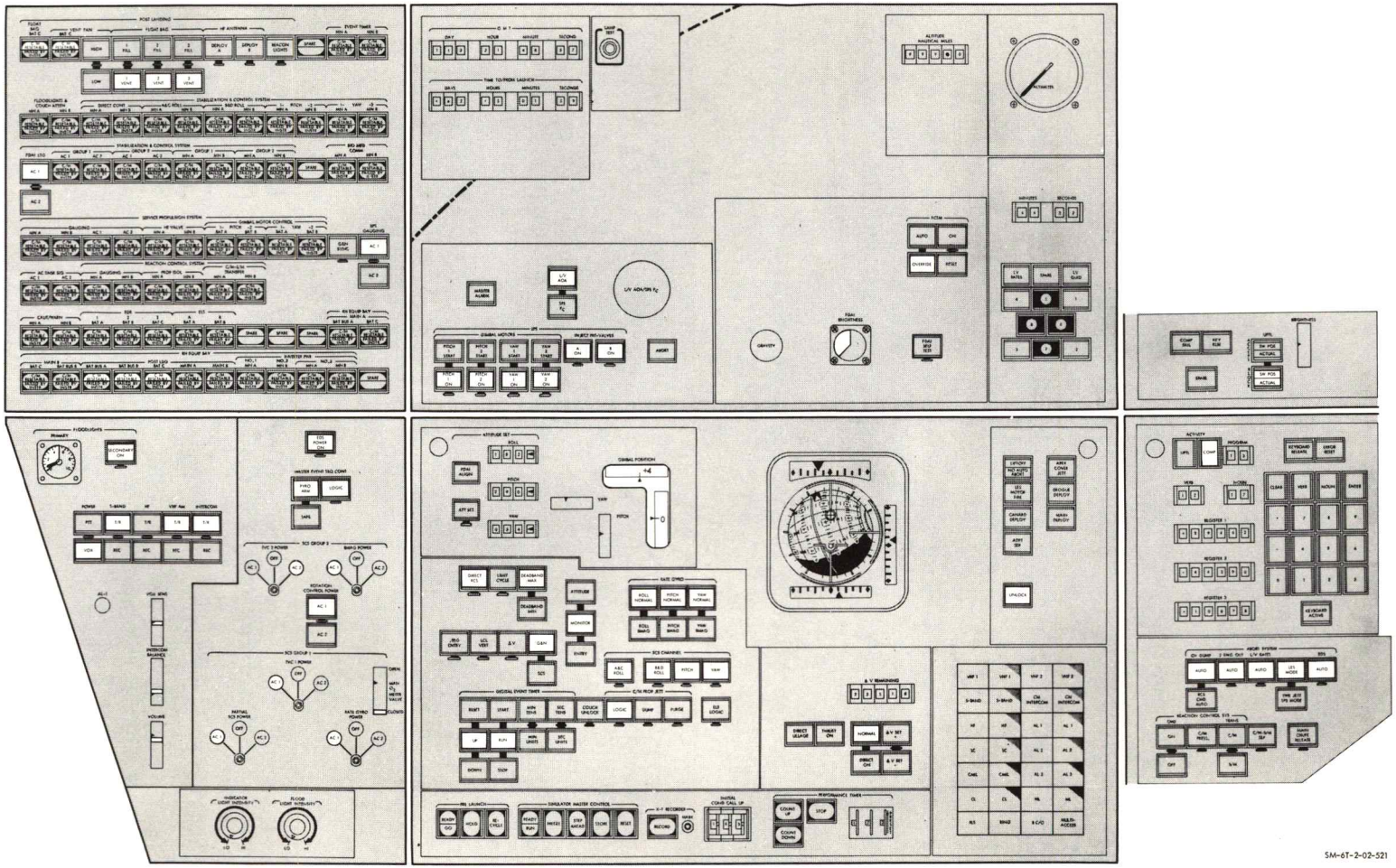

Figure 3-41. Sample Initialization Checklist (Pictorial)

Table 3-14. Sample Initialization Data Sheet

Step	Malf	Time	Function	IOS Visibility/Action	Notes
1				MAN O_2 METERING VALVE - CLOSED	
2				S/M O_2 ISO - OPEN lt on	
3				S/M SUPPLY REGULATOR - 1 and 2 lts on	
4				CO_2 ABSORBER IN PLACE - No. 1 and No. 2 lts on	
5				C/M RCS He TEMP 95	
6				C/M RCS PRESS He - 4500	
7				C/M RCS PRESS F - 200	
8				C/M RCS PRESS OX - 200	
9				PROPELLANT QUANTITY OXIDE - 131	
10				PROPELLANT QUANTITY FUEL - 65	
11				RCS INDICATORS C/M - B lt on	
12				UPTEL BLOCK lts on	

Initialization Data Sheet Sta 2 S-2

Table 3-15. Table of IOS Data Sheets

AOH Paragraph	IOS Data	Crew Activity	Remarks	Nominal Time
		PRELAUNCH		
8.1	P1.1	Initial prelaunch ECS check	Also refer to para 3.6.5.1 (Prelaunch IOS Data Sheets).	00:02:00
8.1	P1.2	Control and display check	Also refer to para 3.6.5.1 (Prelaunch IOS Data Sheets).	00:04:00
8.1	P2.1	Control and display check	Also refer to para 3.6.5.1 (Prelaunch IOS Data Sheets).	00:02:00
8.1	P3.1	Initial prelaunch ECS check	Also refer to para 3.6.5.1 (Prelaunch IOS Data Sheets).	00:02:00
8.1	P3.2	Control and display check	Also refer to para 3.6.5.1 (Prelaunch IOS Data Sheets).	00:04:00
8.1	P1.3	Launch preparation	Also refer to para 3.6.5.1 (Prelaunch IOS Data Sheets).	00:01:00
8.1	P2.2	Launch preparation	Also refer to para 3.6.5.1 (Prelaunch IOS Data Sheets).	00:01:00
8.1	P3.3	Launch preparation	Also refer to para 3.6.5.1 (Prelaunch IOS Data Sheets).	00:01:00
		ASCENT AND INITIAL ORBIT		
8.2	A1.1	Ascent	Also refer to para 3.6.5.2 (Launch and Ascent IOS Data Sheets).	00:12:00
8.2	A2.1	Ascent	Also refer to para 3.6.5.2 (Launch and Ascent IOS Data Sheets).	00:12:00
8.2	A3.1	Ascent	Also refer to para 3.6.5.2 (Launch and Ascent IOS Data Sheets).	00:12:00
8.2	01.1	Initial orbit procedures	Also refer to para 3.6.5.3 (Special Orbital Procedures).	00:03:00
8.2	03.1	Initial orbit procedures	Also refer to para 3.6.5.3 (Special Orbital Procedures).	00:03:00
8.2	04.1	Initial orbit procedures	Also refer to para 3.6.5.3 (Special Orbital Procedures).	00:15:00
None	01.2	Minimum power operations	Refer to para 3.6.5.3 (Special Orbital Procedures).	00:02:00
None	03.2	Minimum power operations	Refer to para 3.6.5.3 (Special Orbital Procedures).	00:01:00
None	01.3	S-IVB separation	Derived from Task Analysis for Mission 204A.	00:05:00
None	03.3	S-IVB separation	Derived from Task Analysis for Mission 204A.	00:05:00

Table 3-15. Table of IOS Data Sheets (Cont)

AOH Paragraph	IOS Data	Crew Activity	Remarks	Nominal Time
		DEORBIT AND ENTRY		
	E1.1	Deorbit delta V procedures	R507 - P32 and P42 Also refer to para 3.6.5.4 (Deorbit and Entry IOS Data Sheets), includes GN1.40 (Attitude Control Mode Check) and GN1.44 (Attitude Manuever).	00:15:00
8.4	E3.1	Deorbit delta V	Also refer to para 3.6.5.4 (Deorbit and Entry IOS Data Sheets), includes SP3.04 (Delta V Operations).	00:15:00
	E4.1	Deorbit delta V	R507 - P32 Also refer to para 3.6.5.4 (Deorbit and Entry IOS Data Sheets), includes GN4.01 (IMU Orientation Determination) and GN4.03 (Program AGC), and GN4.07 (IMU Alignment) (SCM).	00:15:00
	E1.2	Postdelta V operations	R507 - P61 and P62 Also refer to para 3.6.5.4 (Deorbit and Entry IOS Data Sheets), includes GN1.03 (Program AGC) and GN1.44 (Attitude Manuever).	00:04:00
8.4	E2.1	Postdelta V operations	Also refer to para 3.6.5.4 (Deorbit and Entry IOS Data Sheets), includes RC2.01 (C/M-RCS Check).	00:04:00
8.4	E3.2	Postdelta V operations	Also refer to para 3.6.5.4 (Deorbit and Entry IOS Data Sheets), includes EP3.08 (Disconnect Fuel Cells).	00:04:00
	E1.3	Postseparation operations	R509 - P62, P63, and P66 Also refer to para 3.6.5.4 (Deorbit and Entry IOS Data Sheets).	00:15:00
8.4	E1.4	ELS arming	Also refer to para 3.6.5.4 (Deorbit and Entry IOS Data Sheets).	00:07:30
8.4	E3.4	ELS arming	Also refer to para 3.6.5.4 (Deorbit and Entry IOS Data Sheets).	00:01:40
		RECOVERY PROCEDURES		
8.5	R1.1	Postlanding procedures		00:04:00
8.5	R2.1	Postlanding procedures		00:00:30
8.5	R3.1	Postlanding procedures		00:04:00
8.5	R4.1	Postlanding procedures		00:02:00

Table 3-15. Table of IOS Data Sheets (Cont)

AOH Paragraph	IOS Data	Crew Activity	Remarks	Nominal Time
		ABORT PROCEDURES		
9.2.1.1.1	B1.1	Pad and low-altitude abort (prior to T + 42 sec)		00:01:30+h
9.2.1.1.1	B1.2	Low-altitude abort (after T + 42 sec)		00:01:30+h
9.2.1.1.2	B1.3	LES aborts 30,000 to 120,000 ft		00:01:30+h
9.2.1.1.3	B1.4	LES aborts 120,000 ft to tower jettison		00:01:30+h
9.2.2	B1.5	SPS abort	SPS abort procedures remain as TBSL items in AOH.	
		SYSTEMS		
		SCS		
	SC1.03	SCS delta V	This procedure is based on engineering procedures released through IL 697-503-110-65-118. Also includes IOS Data Sheet GN4.03 (Program AGC).	
		RCS		
8.3.1.4	RC2.01	C/M RCS periodic check		00:00:30
8.3.1.4	RC2.02	S/M RCS periodic check		00:02:00
		ECS		
8.3.1.6	EC3.01	Orbital ECS hourly check		00:02:00
8.3.1.6	EC3.02	CO_2-odor absorbent filter replacement		00:02:00
8.3.1.6	EC3.05	Cabin cold-soak		00:00:05
8.3.1.6	EC4.06	Waste water dump operations		00:05:00
		EPS		
8.3.1.5	EP3.05	Fuel cell hydrogen purge		00:02:30
8.3.1.5	EP3.06	Fuel cell oxygen purge		00:02:00
8.3.1.5	EP3.07	Battery charge		00:00:40+
8.3.1.5	EP3.08	Fuel cell shutdown procedures		00:01:00
8.3.1.5	EP3.10	EPS periodic check		00:03:00
8.3.1.5	EP3.11	Manual pressure control verification		00:03:00
8.3.1.5	EP3.12	Quantity balance verification		

Table 3-15. Table of IOS Data Sheets (Cont)

AOH Paragraph	IOS Data	Crew Activity	Remarks	Nominal Time
		SPS		
8.3.1.3	SP3.01	SPS periodic check		00:03:00
8.3.1.3	SP3.02	SPS periodic propellant quantity gaging system check		00:02:00
8.3.1.3	SP1.03	Gimbal position indicators test		00:00:30
	SP3.04	Delta V operations, station 3	Task Analysis Function SP003, SP004.	
		G&N		
	GN4.01	G&N system activation	Task Analysis Function GN008, GN041, GN044, GN075, GN126, SC010.	
8.3.1.1	GN4.02	G&N periodic verification		
	GN4.03	Program AGC for major mode	R507	
	GN4.04	IMU orientation determination	R507 - P51 Also includes IOS Data Sheets GN4.03 (Program AGC), GN4.49 (Sighting Mark Routine).	
	GN4.06	IMU alignment (S-IVB)	R507 - P52 Also includes IOS Data Sheets GN4.03 (Program AGC), GN4.49 (Sighting Mark Routine), GN4.50 (Automatic Optics Positioning).	
	GN4.07	IMU alignment (SCM)	R507 - P53 Also includes IOS Data Sheets GN4.03 (Program AGC), GN4.49 (Sighting Mark Routine), GN4.50 (Optics Positioning).	
	GN4.08	CSM local vertical	R507 - P21 Also includes IOS Data Sheets GN4.03 (Program AGC), GN1.40 (Attitude Control Mode Check), GN1.44 (Attitude Maneuver).	
	GN4.09	Landmark tracking	R507 - P22 Also includes IOS Data Sheets GN4.03 (Program AGC), GN4.49 (Sighting Mark Routine), GN4.50 (Automatic Optics Positioning).	
	GN4.10	Star-landmark navigation measurement	R507 - P23 Also includes IOS Data Sheet GN4.03 (Program AGC).	
	GN4.11	AGC update	R507 - P27	

Table 3-15. Table of IOS Data Sheets (Cont)

AOH Paragraph	IOS Data	Crew Activity	Remarks	Nominal Time
	GN4.12	Orbit change delta V station 4	R507 - P31 Also includes IOS Data Sheets GN4.03 (Program AGC), GN4.04 (IMU Orientiation Determination), GN4.07 (IMU Alignment) (SCM).	
	GN1.13	Orbit change delta V station 1	R507 - P31, P41, and R37 Also includes IOS Data Sheets GN4.03 (Program AGC), GN1.40 (Attitude Control Mode Check), & GN1.44 (Attitude Maneuver). SP1.03 (SPS Gimbal Drive Test).	
	GN1.40	Attitude control mode check	R507 - R1	
	GN1.44	Attitude maneuver	R507 - R2	
	GN4.49	Sighting mark	R507 - R14	
	GN4.50	Automatic optics positioning	R507 - R15	
	GN4.55	Orbit parameter display	R507 - R33 Also includes IOS Data Sheet GN4.03 (Program AGC).	
	GN4.56	Prethrust orbit change data load	R507 - R22	
		T/C		
8.3.1.7.1	TC1.01	Audio center activation station 1, 2, and 3		00:00:30
8.3.1.7.1	TC3.02	VHF-AM voice communications (MSFN contacts)		00:00:30
8.3.1.7.3	TC3.03	Up-data link activation		00:00:10
8.3.1.7.3	TC3.04	VHF-FM activation		00:00:30
8.3.1.7.3	TC3.05	Transmit high-bit rate PCM, VHF-FM		00:00:30
8.3.1.7.3	TC3.06	Transmit low-bit rate PCM, VHF-FM		00:00:30
8.3.1.7.3	TC3.07	Transmit recorded high-bit rate PCM, VHF-FM		00:00:30
8.3.1.7.3	TC3.08	Transmit recorded low-bit rate PCM, VHF-FM		00:00:30
8.3.1.7.3	TC3.09	Record high-bit rate PCM		00:00:30
8.3.1.7.3	TC3.10	Record low-bit rate PCM		00:00:30
8.3.1.7.3	TC3.11	Record real-time analog rate		00:00:30
8.3.1.7.4	TC3.12	Activate USBE power amplifier in bypass mode		00:00:30

Table 3-15. Table of IOS Data Sheets (Cont)

AOH Paragraph	IOS Data	Crew Activity	Remarks	Nominal Time
8.3.1.7.4	TC3.13	Activate USBE power amplifier in high or low-power mode		00:00:30
8.3.1.7.4	TC3.14	USBE voice operations		00:00:30
8.3.1.7.4	TC3.15	USBE, transmit recorded low-(or high)-bit rate PCM		00:00:30
8.3.1.7.4	TC3.16	USBE, transmit recorded high-rate PCM and analog		00:00:30
8.3.1.7.4	TC3.17	USBE, transmit low- or high-bit rate PCM		00:00:30
8.3.1.7.4	TC3.18	USBE, transmit low- or high-bit rate PCM in ranging mode		00:00:30
8.3.1.7.4	TC3.19	USBE, transmit in ranging only		00:00:30
8.3.1.7.4	TC3.20	USBE, transmit high-or low-bit rate PCM and TV		00:00:30
8.3.1.7.2	TC3.21	C-band tracking and ranging		00:00:30
8.3.1.7.4	TC3.22	Reviewed tape recorder		00:00:20+
		MALFUNCTIONS		
9.1.4.2	MRC.01	S/M RCS C/W light illuminates		
9.1.6.4	MEC.01	O_2 FLOW HI light illuminates		
9.1.6.3	MEC.02	O_2 FLOW HI light illuminates, O_2 flow high, cabin pressure high		
9.1.6.6	MEC.03	Glycol discharge pressure abnormal		
9.1.6.7	MEC.04	Suit compressor delta P indicates below normal		
9.1.6.8	MEC.05	Suit temperature indicates low		
9.1.6.8	MEC.06	Suit temperature indicates high		
9.1.6.9	MEC.07	Cabin temperature indicates high		
9.1.6.10	MEC.08	Suit pressure indicates low		
9.1.6.10	MEC.09	Suit pressure indicates high		
9.1.6.11	MEC.10	Cabin pressure high		
9.1.6.5	MEC.11	Tank pressure 1 O_2 low		
9.1.5.3	MEP.01	O_2 failure		
9.1.5.2	MEP.02	H_2 failure		
9.1.5.3	MEP.03	N_2 failure		
9.1.5.1	MEP.04	O_2 PRESS light illuminates		

Table 3-15. Table of IOS Data Sheets (Cont)

AOH Paragraph	IOS Data	Crew Activity	Remarks	Nominal Time
9.1.5.1	MEP.05	H_2 PRESS light illuminates		
9.1.5.3	MEP.06	Fuel cell fail light illuminates H_2 flow high		
9.1.5.3	MEP.07	Fuel cell fail light illuminates, O_2 flow high		
9.1.5.4	MEP.08	D-C BUS A UNDERVOLT light illuminates		
9.1.5.6.14	MEP.10	A-C inverter and bus check	Part of AOH para 9.1.5.6 thru 9.1.5.14.	
9.1.5.6.14	MEP.11	Critical loads transfer	Part of AOH para 9.1.5.6 thru 9.1.5.14.	
9.1.5.6.7	MEP.12	Dual-inverter changeover		
9.1.5.8	MEP.13	Single-inverter changeover		
9.1.5.8.9	MEP.14	Bus reset		
9.1.5.6.8	MEP.15	Connect a-c bus loads to bus 1		
9.1.5.9	MEP.16	Overload isolation check		
9.1.5.6	MEP.20	Bus 1 failure, dual-inverter operation		
9.1.5.8	MEP.21	Both 1 and 2 a-c buses fail, single-inverter operation		
9.1.5.9	MEP.22	Bus 1 overload and a-c bus 1 fail lights illuminate		
9.1.5.9	MEP.23	Single-inverter operation		
9.1.5.10	MEP.24	Inverter temperature high, dual-inverter operation SCS operating		
9.1.3.5	MSP.01	SPS PU SENSOR FAIL light illuminates		

Each IOS data sheet listed in table 3-15 is provided with both a description title and an alphanumeric identifier. The alphanumeric identifier groups the IOS data sheets into eight types of procedures as follows:

Prelaunch (P). Those crew procedures accomplished by the flight crew prior to launch

Ascent (A). Those crew procedures which are performed from booster ignition to MSFN confirmation of orbital attainment

Orbital (O). Those crew procedures accomplished in orbit that are other than system and navigation procedures

Abort (B). Those crew procedures which are performed in accomplishing safe recovery aborts from all suborbital situations

Entry (E). Those crew procedures which are performed in preparing for and accomplishing C/M-S/M separation and entry

Postlanding (P). Those spacecraft crew procedures involved in securing from the mission flight phase and preparing spacecraft systems for recovery

SCS Procedures (SC). Those crew procedures involved in operating the stabilization and control system during the Apollo mission

RCS Procedures (RC). Those procedures involved in operating the reaction control system during the Apollo mission

EPS Procedures (EP). Those crew procedures involved in operating the electrical power system during the Apollo mission

ECS Procedures (EC). Those crew procedures involved in operating the environmental control system during the Apollo mission

SPS Procedures (SP). Those crew procedures involved in operating the service propulsion system during the Apollo mission

G&N Procedures (GN). Those crew procedures involved in operating the guidance and navigation system during the Apollo mission

Telecommunications Procedures (TC). Those crew procedures involved in operating the spacecraft telecommunications system during the Apollo mission

Malfunction Procedures (M--). Those crew procedures involved in dealing with malfunction of spacecraft systems during the Apollo mission. Designation (M) is used as prefix to the code for the affected system.

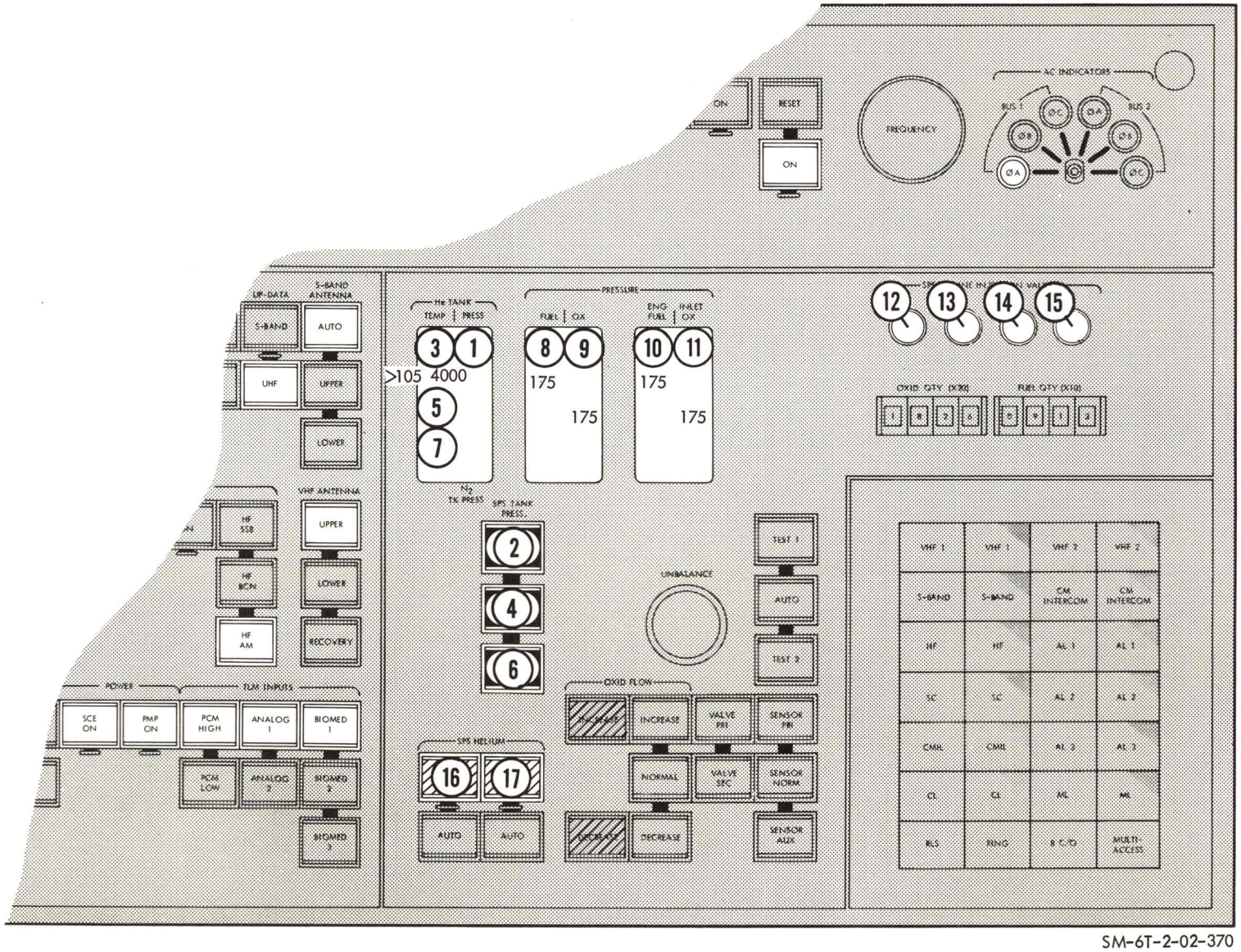

SM-6T-2-02-370

Figure 3-42. Sample IOS Data Sheet (Pictorial)

Table 3-16. Sample Initialization Checklist (Tabular)

Step	Malf	Time	Function	IOS Visibility/Action	Notes
1-11			Record Pressure and Temperature Parameters		
1			He TANK TEMP ind	105	
2			SPS TANK PRESS sw - He	SPS TANK PRESS - He lt on	
3			He TANK PRESS ind	4000 decreasing with use	
4			SPS TANK PRESS sw - N_2 A	SPS TANK PRESS - N_2 A lt on	
5			TK N_2 ind	TBSL	
6			SPS TANK PRESS sw - N_2 B	SPS TANK PRESS - N_2 B lt on	
7			TK N_2 ind	TBSL	
8			PRESSURE FUEL ind	175	
9			PRESSURE OXID ind	175	
10			PRESSURE ENG INLET FUEL ind	175	
11			PRESSURE ENG INLET OX ind	175	
12-15			Record SPS Engine Injection Valve Positions		
12			SPS ENGINE INJECT 1 ind - CLOSE	SPS ENGINE INJECTION VALVE 1 ind - CLOSE	

SPS Periodic Check

The alphanumeric identifies for the IOS data sheets are made up as follows:

EC1.1 IOS Data Sheet Number

EC Type of procedure (environmental control) crew station
1 (1, 2, 3 or 4)
.1 Specific data sheet number (by type of procedure)

MEC 01 IOS Data Sheet Number

M Malfunction procedure
EC Affected system
01 Specific data sheet number (by system)

3.6.5.1 Prelaunch Procedures IOS Data Sheets.

For reasons relating to both simulator constraints and training planning, the procedures outlined in the prelaunch IOS data sheets do not incorporate all of the procedures included in paragraph 8.1 of the Apollo Operations Handbook (SM2A-03). Scope, organization, and contents of prelaunch crew procedures as depicted by the IOS data sheet are discussed in the following paragraphs.

Space suit and couch procedures for the simulator are not a subject of this handbook. For this reason, prelaunch IOS data sheets commence with crew procedures at step 9 (Perform Initial ECS Status Check) of paragraph 8.1 (Prelaunch) of the AOH. Station 2 involvement in hatch installation (steps 8 and 12) are not simulator functions, as IOS data sheets have not been provided for those procedures. The lower equipment bay procedures outlined between steps 14 and 19 have no training significance beyond checking switch positions and have not been included in the IOS data sheets. Cabin leak test and purge procedures outlined in step 20 of paragraph 8.1 (of SM2A-03) have not been included, since the AMS does not simulate GSE inputs to the spacecraft.

The IOS data sheets for prelaunch are listed and identified in table 3-15 of this handbook. Prelaunch activity starts with step 9 (ECS Station Check). That procedure is the subject of P1.1. As the station 1 ECS status check is completed, the station 3 ECS status check (step 10 of paragraph 8.1) is initiated. This procedure is the subject of IOS data sheet P3.1; at the same time the crewman in station 1 initiates the station 1 controls and displays checklist (step 11 of paragraph 8.1). The checklist is the subject of IOS data sheet P1.2. As the crewman in station 3 completes the ECS status checks, he starts the station 3 controls and displays checklist comprised of steps 13, 24, and 25 of paragraph 8.1. The IOS data sheet for this procedure is P3.2.

Station 2 activity in the prelaunch procedures for the AMS begins with the station 2 controls and displays checklist (step 22, paragraph 8.1) and continues with RCS status check (step 23, paragraph 8.1). These procedures are the subject of IOS data sheet P2.1.

Steps 26 through 37 of paragraph 8.1 of SM2A-03 are the final launch preparations for the three crew stations. Station 1 sets the sequencing controls in accordance with step 28 and prepares the SPS and SCS per steps 31 and 33. The crewmember in station 3 activates the telecommunications equipment in accordance with step 29. Station 2 involvement is limited to monitoring functions and verification of AGC programing (step 34 of paragraph 8.1). Station 1 and station 3 activity in steps 26 through 37 is included in IOS data sheets P1.3 and P3.3, respectively. Station 2 participation is the subject of IOS data sheet P2.2.

3.6.5.2 Launch and Ascent Procedures IOS Data Sheets.

Launch and ascent procedures are the subject of steps 1 through 38 of 8.2 of the Apollo Operations Handbook (SM2A-03). Launch activities are primarily performed at station 1, with stations 2 and 3 activities limited to monitoring system parameters and communicating with MSFN. Crew procedures for stations 1, 2, and 3 during launch and ascent are depicted in IOS data sheets A1.1, A2.1, and A3.1, respectively.

3.6.5.3 Special Earth Orbital Procedures IOS Data Sheets.

Three sets of crew procedures have been identified as special earth orbital procedures. All other orbital activities are made up of either systems operation-management or navigation activities. The three sets of procedures are initial orbital procedures as reflected in steps 41 through 55 of paragraph 8.2 of SM2A-03, S-IVB, separation procedures, and minimum power procedures. The S-IVB separation and minimum power procedures are not included in the 15 October revision to the AOH. IOS data sheets for stations 1, 3, and 4 during initial orbital operations are 01.1, 03.1, and 04.1, respectively. Procedures for stations 1 and 3 during minimum power operations are the subject of IOS data sheets 01.2 and 03.2; and procedures for station 1 and station 3 during S-IVB separation are contained in IOS data sheets 01.3 and 03.3.

3.6.5.4 Deorbit and Entry Procedures IOS Data Sheets.

Deorbit and entry procedures in paragraph 8.4 of the Apollo Operations Handbook (SM2A-03) have been divided into four sequential groups for use in the AMS: those involved in preparing for and accomplishing retrograde, preparation for and accomplishment of C/M-S/M separation, preparation for and accomplishment of G&N mode entry, and those procedures required to monitor-control the earth landing sequence.

Procedures for preparing for and accomplishing retrofire are included in steps 1 through 17 of paragraph 8.4 of the AOH. The IOS data sheets for these procedures are E1.1, E3.1, and E4.1.

Procedures for preparing for and accomplishing C/M-S/M separation are included in steps 19 through 30 of paragraph 8.4 in SM2A-03. Step 18

of the procedure has been relocated for AMS applications to immediately follow step 15. This was done to eliminate all activities outside of the couches during deorbit and entry. IOS data sheets for stations 1, 2, and 3 are E1.2, E2.1, and E3.2, respectively.

Procedures for preparing for and accomplishment entry are included in steps 31 through 60 in paragraph 8.4 of the AOH. The IOS data sheets for these procedures are E1.3, E2.3, and E3.3.

Procedures for arming, otherwise operating, and monitoring the earth landing sequence are included in steps 61 through 82 in paragraph 8.4 of the AOH. The IOS data sheets for these procedures are E.14 and E3.4.

3.6.5.5 Postlanding Procedures IOS Data Sheets.

Postlanding procedures are the subject of paragraph 8.5 of SM2A-03. IOS data sheets for stations 1, 2, 3, and 4 are R1.1, R2.1, R3.1, and R4.1, respectively.

3.6.5.6 System Procedures IOS Data Sheets.

IOS data sheets for system management procedures are with reference to paragraph 8.5 of the Apollo Operations Handbook. In many cases paragraph numbering of individual procedures in the AOH is prohibitive to numerical cross-referencing in table 3-14. However, titles for IOS data sheets and SM2A-03 system management procedures are common and cross-correlation can be accomplished by topic rather than paragraph number.

The October 15 revision to the Apollo Operations Handbook specifically omits procedures for operation of the SCS and G&N system. Therefore, alternate procedures references have been established for those SCS and G&N procedures required to accomplish the nominal training mission; these alternate procedures sources are defined in paragraph 3.6.5.7 and 3.6.5.8.

3.6.5.7 SCS Procedures IOS Data Sheets.

Paragraph 3.5 of this volume of the handbook explains that SCS operating procedures were intentionally omitted from the October 15 AOH. Since SCS procedures are essential to the accomplishment of a continuous nominal training mission, an alternate source of SCS procedures has been designated as reference source for this instructor handbook. The reference used was a series of NAA/S&ID Engineering ILs (IL Nos. 697-503-110-65-105, 697-503-110-65-110, 697-503-110-65-118, 697-503-110-66-001, and 697-503-110-66-014. The only SCS procedure from these ILs that is directly manifested as an IOS data sheet is "SCS Mode Delta V," the subject of IOS data sheet SC1.03 and Engineering IL 697-503-110-65-118. The ILs used as SCS procedures reference in the preparation of this instructor handbook are also being used as SCS procedures reference data in preparation of the April 15 revision of the AOH.

3.6.5.8 G&N Procedures IOS Data Sheets.

Paragraph 3.5 also explains that no G&N procedures were provided in the October 15 AOH. Since G&N procedures are essential to the accomplishment of a continuous nominal training mission, an alternate source of G&N procedures has been designated as reference source for this instructor handbook. The references used were MIT Report R507 (January 1, 1966) and the AMS End Item Specification for the SC 012 modification. These references were used in preparing G&N IOS data sheets for both station 1 and station 4. The procedures themselves are from R507. The verb/noun combinations are from the end item specification. Table 3-15 identifies which R507 procedure was used to prepare each IOS data sheet. The MIT R507 document is also being used as basic reference material in the preparation of the April 15 revision to the AOH.

3.6.5.9 SPS Abort and RCS Retrofire Procedures IOS Data Sheets.

No crew procedures for SPS abort and RCS retrofire suitable for use in the AMS were available at the time this document was published. For this reason, no IOS data sheets for these two procedures have been identified or provided in this handbook.

3.6.5.10 Malfunction Procedures IOS Data Sheets.

IOS data sheets have been provided for only those malfunctions that develop into complex operations. Where a malfunction is overriden by positioning a few simple controls, data provided in section 5 (Malfunction Data) of Volume II of this handbook will suffice. Malfunction procedures from paragraph 9.1 of the AOH that have been supported with IOS data sheets are listed in table 3-15. The listing is by IOS data sheet number, malfunction procedures title, and SM2A-03 paragraph number.

3.6.6 COMPILING THE SCRIPT.

Figure 3-43 illustrates the complete sequence of instructor-operator involvement in preparing for and accomplishing an AMS training session in accordance with this handbook. Figure 3-40, provided earlier in this section of the handbook, illustrates the preparation of the session script in greater detail. The steps involved in preparing a script for a selected session are as follows:

a. Remove applicable session data sheet from section 2 of Volume II.

b. Remove applicable initialization checklists from section 3 of Volume II (per instructions in session data sheet).

c. Remove applicable IOS data sheets from section 4 of Volume II (per instructions in session data sheet).

d. Copy session data sheet, initialization checklist, and IOS data sheet and return originals to looseleaf Volume II.

e. Arrange IOS data sheets in accordance with instructions provided in the session data sheet.

f. Annotate the IOS data sheets in accordance with instructions provided in the session data sheet.

g. Arrange the completed instructor script with session data sheet first, initialization checklist second, and compiled IOS data sheets last, then staple or otherwise bind.

3.6.7 SESSION ACCOMPLISHMENT.

It will not be necessary for the instructor-operator to prepare a script every time the simulator is used. Once an instructor script has been prepared (as outlined in paragraph 3.5.6), it may be used over and over again. Whether a new script is prepared or a preprepared script is used, the procedures for accomplishing a session are the same. (See figure 3-43.)

The first and last phases of training session accomplishment are the crew briefings to be provided. The two-conference type training briefings are for different purposes and must be separately prepared. The complete task of training session accomplishment (as illustrated in figure 3-43) is discussed in the following paragraphs.

3.6.7.1 Presimulation Briefing.

The purpose of the presimulation briefing is to introduce the flight crew to the purpose and scope of the planned session, provide any crew background in simulated spacecraft configuration and simulated mission plan required, and introduction to the crew the procedures to be used. The briefing should be primarily controlled by the instructor-operator with questions, as required, by the crew.

Reference materials for session preparation are provided in this handbook and the Apollo Operations Handbook (SM2A-03). The nature of the use of these references is as follows:

Session Data Sheet (of Completed Script). Purpose and scope of planned sessions

AMS Utilization (Section 3, Volume I). As required to explain the mission plan and mission events to be simulated in the AMS; should have extensive application in mission task and typical mission training and only limited application in part task training

Apollo Operations Handbook, (15 October 1965). Crew procedures to be practiced during the training session

AMS Description (Section 1, Volume I). As required to explain SCM control and indicator functions; may be used in conjunction with table 2-1 to explain differences between AMS and AF 012

SELECT SESSION
(FROM SYLLABUS-SECTION 3, VOLUME 1)

REFERENCES:
- NOMINAL TRAINING MISSION (SEC 3, VOLUME I)
- APOLLO OPERATIONS HANDBOOK (SM2A-03)

PREPARE INSTRUCTOR SCRIPT
(USING SESSION DATA SHEET - SECTION 2, VOLUME II)

- REMOVE SESSION DATA SHEET (SEC 2, VOLUME II)
- REMOVE INITIALIZATION DATA SHEETS PER SESSION DATA SHEET (SEC 3, VOLUME II)
- REMOVE IOS DATA SHEETS PER SESSION DATA SHEET (SEC 4, VOLUME II)
- COPY SCRIPTING MATERIALS AND RETURN ORIGINALS TO INSTRUCTOR WORKBOOK
- ARRANGE AND ANNOTATE SCRIPT PER INSTRUCTIONS IN SESSION DATA SHEET

BRIEF CREW
(PRE-SESSION BRIEFING)

- SESSION PURPOSE & SCOPE (SESSION DATA SHEET)
- MISSION CHARACTERISTICS (SESSION DATA SHEET PLUS NOMINAL TRAINING MISSION)
- CREW PROCESURES (SESSION DATA SHEET PLUS APOLLO OPERATIONS HANDBOOK)
- SIMULATOR VS SPACECRAFT ENVIRONMENT (APOLLO OPERATIONS HANDBOOK, AMS DESCRIPTION, SIMULATOR SYSTEMS)

PLAN TRAINING SESSION
(USING PREPARED INSTRUCTOR SCRIPT)

REFERENCES:
- SYLLABUS & NOMINAL MISSION (SEC 3, VOLUME 1)
- APOLLO OPERATIONS HANDBOOK (SM2A-03)
- SIMULATOR SYSTEMS (SEC 2, VOLUME I)
- AMS DESCRIPTION (SEC 1, VOLUME I)
- AMS OPERATION (SEC 1, VOLUME II)
- MALFUNCTION DATA (SEC 5, VOLUME II)
- SIMULATION OUTPUT DATA (SEC 6, VOLUME II)

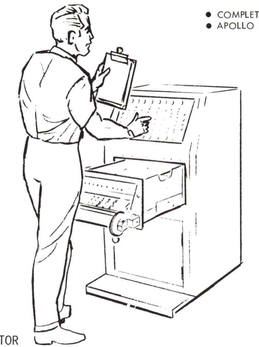

SET-UP SIMULATOR
(PER PROCEDURES OUTLINED IN SESSION DATA SHEET)

- AMS OPERATION (SEC 1, VOLUME II)
- AMS DESCRIPTION (SEC 1, VOLUME I)

ACCOMPLISH SESSION
(PER SESSION DATA SHEET)

- COMPLETED INSTRUCTOR SCRIPT
- APOLLO OPERATIONS HANDBOOK (SM2A-03)

DE-RRIEF CREW
(POST SESSION DE-BRIEFING)

- MISSION HISTORY (NOMINAL TRAINING MISSION & TRANSCRIPTION DATA)
- CREW PERFORMANCE (APOLLO OPERATIONS HANDBOOK & TRANSCRIPTION DATA)
- MALFUNCTIONS AND MSFN SIMULATION (SIMULATOR SYSTEMS - SEC 2, VOLUME I)

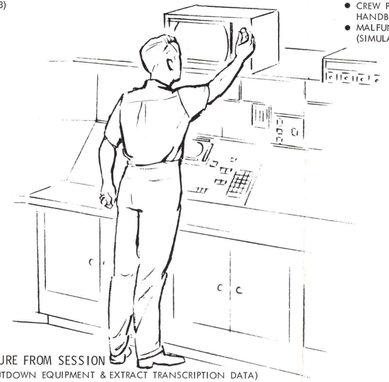

SECURE FROM SESSION
(SHUTDOWN EQUIPMENT & EXTRACT TRANSCRIPTION DATA)

- AMS OPERATION (SEC 1, VOLUME II)
- AMS DESCRIPTION (SEC 1, VOLUME I)

SM-6T-2-02-256A

Figure 3-43. Use of Instructor Handbook

Simulator Systems (Section 2, Volume I). As required to explain spacecraft systems simulated in the AMS; should have extensive application in part task training and little or no application in mission task and typical mission training.

3.6.7.2 Use of Completed Script.

Instructor-operator procedures for the AMS are the subject of section 1 (AMS Operation) of Volume II. Special instructions which are supplemental to that section are included in the session data sheet. Contents of section 1 of Volume II, as amended by the session data sheet, will be used by the instructor-operator to set up and accomplish the training session.

During initialization and accomplishment of each simulation run in the session, the instructor-operator should work primarily from the initialization checklist and the IOS data sheets, and annotation of these items should be made accordingly. Reference to other portions of the handbook during actual on-line simulation would interfere with instructor-operator concentration on the simulation-training situation.

3.6.7.3 Postsimulation Debriefing.

The purpose of the postsimulation debriefing is to review the results of the completed training session. The debriefing should be primarily controlled by the performing flight crewmembers for the purpose of understanding and interpreting results. The instructor-operator should assist with reference materials and personal observations. Reference materials and their applications are as follows:

Instructor Script. For training session history

Instructor-Operator Notes (During Run or Session). For instructor-operator observations and comments

Data Transcriptions from AMS. For performance evaluation of the session with data transcribed by X-T and X-Y plotters and digital tape recorders

AMS Utilization (Section 3, Volume I). As required to review the mission plan and circumstances surrounding mission events; should have extensive application in mission task and typical mission training and only limited application in part task training

Apollo Operations Handbook (15 October 1965). As required in discussion of crew procedures accomplished during the session

System Simulation (Section 2, Volume I). As required to explain simulated malfunctions, MSFN systems data and systems performance; is applicable to all sessions involving simulated malfunctions.

3.6.8 REFERENCE TABLES.

Sections 5 and 6 of Volume II contain reference tables for setting up and operating the AMS. Tables are for two functional purposes. The first purpose is as reference material for the training sessions and simulation runs included in the AMS syllabus contained in this book. The second purpose is a basic data to be used in the preparation of additional sessions and runs above and beyond those defined in this handbook.

3.6.8.1 Simulated Malfunction Tables.

Section 5 of Volume II contains a complete list of the spacecraft malfunctions simulated in the initial delivered configuration of the AMS. The malfunctions are identified by MIU number and descriptive title. They are individually supported with descriptions of manner of manifestation to the crew (instructor) and appropriate crew response information. The malfunction tables are broken into systems. Malfunctions listed in the tables are also illustrated in the respective system flow diagrams provided in section 2 (Simulator Systems) of this volume.

3.6.8.2 Simulation Output Tables.

Section 6, Volume II contains a complete list of spacecraft and mission simulation outputs available to X-T and X-Y recorders, tape recorders, the electronic typewriter, and the TM console. The tables will be grouped by computer program. Contents of the table includes the following:

- Program symbol for each simulation parameter
- Description of each simulation parameter
- Unit of measurement and operating range (upper and lower limit) of each parameter
- Identification of whether parameter is in analog or digital format
- Identification of parameters available in TM console channels
- Identification of TM fault patches
- Identification of parameters normally transcribed on digital tape.

3.6.9 COMPILING ADDITIONAL SESSIONS.

The number of simulated situations, simulator runs, and training sessions conceivable on the AMS is, of course, infinitely larger than those in the syllabus contained in this handbook. However, where situations, runs, and sessions, not included in the syllabus are required for any purpose, the handbook contents can be used to prepare additional session data sheets. The procedure for using the SM2A-03 to prepare additional session data sheets is shown in figure 3-44 and discussed in the following paragraphs.

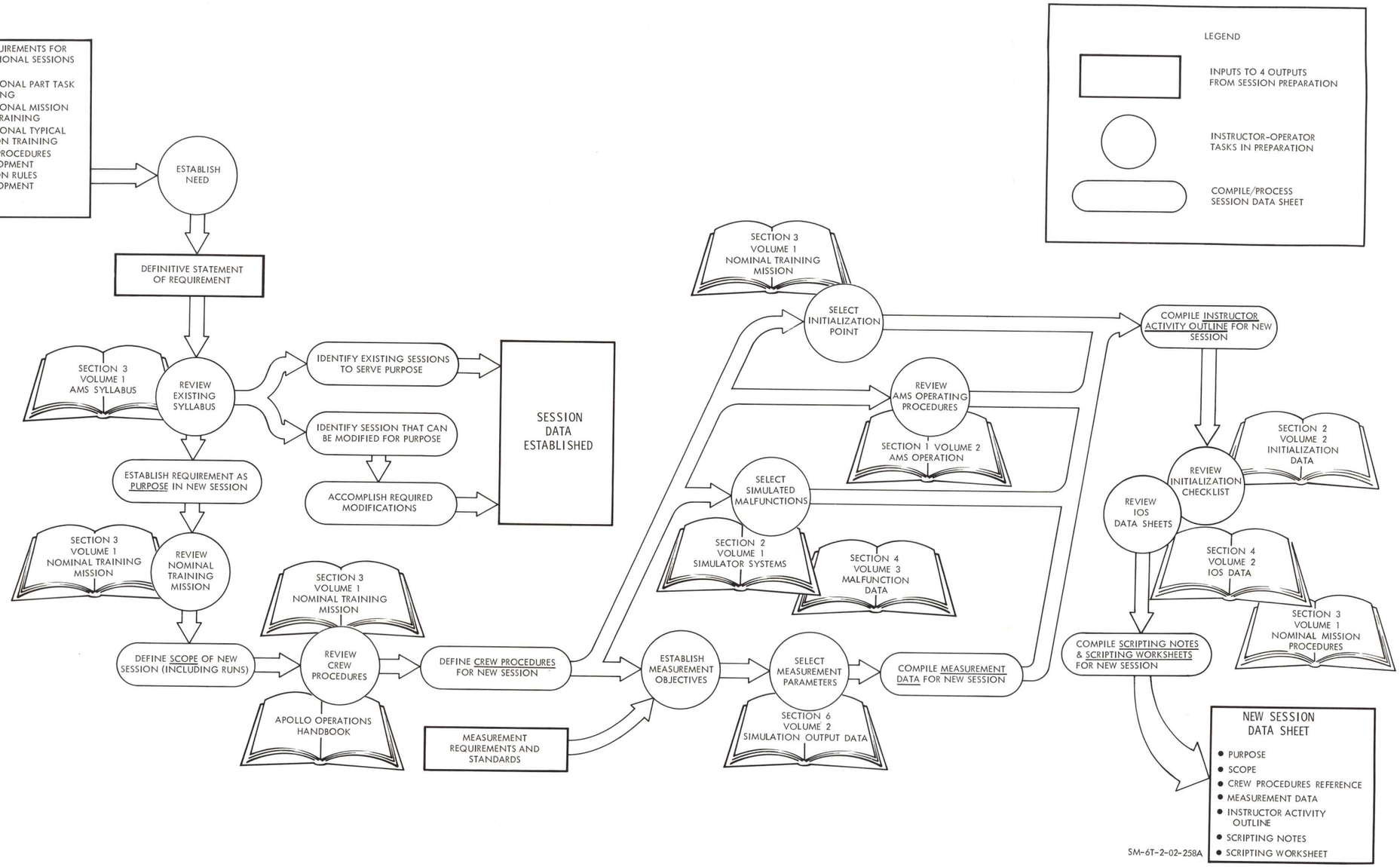

Figure 3-44. Preparing New Session Data Sheets From Handbook

3.6.9.1 Requirements for Additional Sessions.

Requirements for additional training sessions and simulation runs can occur for any number of reasons. Additional sessions may be desired in any of the types of training in the syllabus provided in this handbook (part task, mission task, and typical mission). Crew procedures development and verification will produce requirements not covered by session in the syllabus, and so will development and verification of mission rules.

Whenever there is a requirement to use the simulator for a purpose and/or in a fashion other than chronological accomplishment of the syllabus, the procedures illustrated in figure 3-44 should be followed.

3.6.9.2 Use of Existing Sessions.

The first step is to prepare an accurate definitive statement of the requirements to be met and review the syllabus provided in this section to see if any of the sessions defined therein will meet the requirement or can be modified to meet the requirement. If any of the existing sessions will meet the requirement, session data for the special purpose is established, and the appropriate session data sheet can be removed from section 2 of Volume II and used to prepare the required script.

Where it appears that an existing session can be modified to meet the requirement, the session data sheet could be removed from section 2 of Volume II, reviewed, modified as required, and used to prepare the required script.

3.6.9.3 New Session Purpose and Scope.

If none of the existing sessions can be adjusted to meet the special requirement, the requirement becomes the "Purpose" of a new session data sheet.

The second step in preparing a new training session is to review the nominal training mission (section 3, Volume I) and establish which phase or phases of the mission should be used, which variations in the defined mission are required, and what simulator runs will be required to fulfill the stated purpose of the session. A general description of the scope of the session and a definitive list of the simulator runs involved should be transcribed on the new session data sheet as the "Scope" of the session.

3.6.9.4 Crew Procedures and Measurement Data.

With purpose and scope defined, the next step in preparing a new training session is to review crew procedure reference for the purpose of determining which procedures are to be performed by the crew in the SCM. This is done by reviewing the SM2A-03 (and other interim procedures references) with respect to the nominal training mission. Tables 3-9, 3-11, and 3-12 of this section will also be useful in identifying crew procedures for the session.

When the specific sections and paragraphs of SM2A-03 to be performed in the session are identified, they should be transcribed as the "Crew Procedures Reference" data on the new session data sheet.

Crew performance measurements are not the subject of this handbook. However, with a known measurement requirement and standard, the handbook can be used to establish and implement a measurement objective; that is, propellant consumption per axis per real time, entry trajectory errors versus RCS thrusting per axis, etc. When such machine transcription objectives are defined, the required parameters (and related programing operators and scale factors) can be located in the simulation output tables in section 6 of Volume II. The measurement objective and specific parameters information should be noted on the new session data sheet as "Measurement Data."

3.6.9.5 Instructor Activity Outline.

Prior to compilation of the instructor activity outline, it is necessary to select the program initialization point(s) and simulated malfunctions to be used in each run. Initialization points (and required fast-time to get to run start points) are selected from the nominal training mission. Two important considerations must be applied in selecting initialization points. The first is that enough elapsed time is included to accomplish crew procedures planned for the run. Table 3-15 in this section includes time approximates for each procedure. The second consideration is that navigation sightings require both daylight and landmark availability. Figures illustrating day-night phases and landmarks available in the nominal training mission are to be found elsewhere in this section of the handbook.

Selection of simulated malfunctions to be used in the new training session is made from the simulated malfunction table in section 5 of Volume II. Flow diagrams of systems simulated are provided in section 2 of this volume, and should be useful in comprehending and interpreting the malfunction descriptions in the table.

After initialization point(s) and simulated malfunctions are selected, the instructor activity outline is prepared. The primary reference for preparing the outline is the contents of section 1 (AMS Operation) of Volume II. The outline is to supplement the checklists contained in that section with those details necessary to accomplish the specific runs of which the new session is comprised. Contents of the outline must include, but is not necessarily limited to, the following items:

- Identification of simulator complex checklist to be used
- Variations in and exceptions to the selected checklist
- Identification of MEP film cassettes and slide magazines required (if any)

- Program operator codes for setting up and initiating the required computer programs
- Desired position of all simulator controls requiring instructor-operator position selection
- Specific details of initialization and step-ahead to run start point(s)
- Malfunction codes and manner of insertion for all selected simulated malfunctions
- Simulator communications system configuration to be used
- True trainee environment setup
- Supplemental instructions for transcription device above and beyond those listed under "Measurement Data" (if any)

3.6.9.6 Scripting Data and Script Preparation.

When the instructor-operator has completed the preparation of the instructor activity outline, he is ready to do detailed planning of the IOS script. If he desires to add the new session to the basic AMS session library, he can complete the new session data sheets by compiling the scripting notes and scripting worksheet. When the application of the new session does not require a permanent and complete session data sheet, the IOS script can be directly prepared without compiling the scripting instructions.

To either compile the scripting instructions or directly prepare the IOS script, it is necessary to identify the initialization checklist(s) and IOS data sheets required for the session. IOS data sheets are identified with the crew procedures (already listed on new session data sheet) as shown in table 3-15 of this section. If the session data sheet is to be completed, the identification of these data items and their sequence of presentation should be noted under scripting instructions. If the script is to be directly prepared, the items should be copied and arranged in their order of presentation. The nominal mission procedure outlines contained in tables 3-9, 3-10, 3-11, and 3-12 should be extremely helpful in preparing the scripting instructions and/or the script itself.

Where a timeline of the planned runs is required, instructions for annotation IOS data sheets should be compiled under "Scripting Notes." Where the script is directly prepared, the timeline can be directly noted under "Time" on the IOS data sheet.

Other notes relative to the specific session runs being planned may be noted on the scripting worksheet (where a session data sheet is being prepared) or directly noted on the IOS data sheet. Such notes must include the following:

- The number of each selected malfunction under "Malf" in direct alignment with the procedure step to which it relates

- Title and description of each malfunction under "Function"
- Anticipated response to each malfunction under "IOS Visibility/Action"
- Instructions for any up-data link operation (including participation in navigation procedures)
- Notes for instructor simulation of MSFN in the nonintegrated mode
- Any instructions required to transition from one IOS data sheet to another in session run accomplishment.

APPENDIX A

ABBREVIATIONS

A/D	Analog-to-digital
AGAP	Attitude gyro accelerometer package
AGC	Apollo guidance computer
AGCU	Attitude gyro coupling unit
AM	Amplitude modulation
AMS	Apollo mission simulator
AMSC	Apollo mission simulator computer
A/R	Analog resolver
AS	Atmospheric system
AS/GPI	Attitude set-gimbal position indicator
ATT	Attitude
BCD	Binary-coded decimal
BCN	Beacon
BMAG	Body-mounted attitude gyro
CCC	Computer control corporation
C&D	Communications and data system
CCTV	Closed circuit television
C/B	Circuit breaker
C/C	Computer-to-computer
CDU	Coupling display unit
C/M	Command module
CRT	Cathode ray tube
CCS	Console communications system
CTE	Central timing equipment
C/W	Caution and warning
CWS	Caution and warning system
DDP-24	Computer model number
DDP-224	Computer model number
D/A	Digital-to-analog
DBI	Digital bit input
DBIM	Digital bit input (memory)
DBO	Digital bit output
DCE	Data conversion equipment
DCS	Digital command system
DEC	Declination
DMA	Direct memory access
D/R	Digital resolver
DSE	Data storage equipment
DSIF	Deep space information facility
DSKY	Display and keyboard
DWI	Digital word input
DWO	Digital word output
DWOR	Digital word output relay
EAI	Electronic Associates Incorporated
ECS	Environmental control system
EDS	Emergency detection system
ELS	Earth landing system
ESS	Essential
EVA	Extra-vehicular astronaut
FBC	Fully-buffered channel
F/C	Fuel cell
FDAI	Flight director attitude indicator
GFE	Government-furnished equipment
G&N	Guidance and navigation
GMT	Greenwich mean time
GOSS	Global operation support system
GSE	Ground support equipment
GSSC	Ground support simulation computer
HS	Heat shield
HF	High frequency
IGN	Ignition
IIS	Infinity image system
IMCC	Integrated mission control center
IMU	Internal measurement unit
IO	Instructor-operator
I/O	Input-output
IOS	Instructor-operator station
IRIG	Inertial reference integrating gyro
IUDL	Integrated up-data link
INV	Inverter
JETT	Jettison
KMC	Kilo megacycle
KYBD	Keyboard
LAT	Latitude

LEB	Lower equipment bay
LEM	Lunar excursion module
LES	Launch escape system
LONG	Longitude
LOS	Line-of-sight
lt	Light
LV	Launch vehicle
MCP	Manual control panel
MDV	Map and data viewer
MEP	Mission effects projector
MG	Motor generator
MIU	Malfunction insertion unit
MOCR	Mission operations control room
MSCC	Manned Spacecraft Control Center
MSFN	Manned spacecraft flight network
MT	Mission Task
MTR	Motor
MTU	Magnetic tape unit
NRZ	Nonreturn to zero
OCP	Output control pulse
P/B	Pushbutton
PCM	Pulse-coded modulation
PIP	Pulsed input pendulous
PIPA	Pulsed input pendulous accelerometer
PKG	Package
PL	Photometer level
PLSS	Portable life support system
PMP	Premodulation processor
PSIA	Pounds per square inch (absolute)
PT	Part task
PTT	Push-to-talk
PU	Propellant utilization
RAD	Radiator
RCS	Reaction control system
RCVR	Receiver
REC	Receive(r)
RTC	Real time command
RV	Rendezvous
S/C	Spacecraft
SCATS	Simulation checkout and training system
SCE	Signal conditioning equipment
SCS	Stabilization control system
SCM	Simulated command module
SCT	Scanning telescope
SEP	Separation
SHA	Sidereal hour angle
SOC	Simulation operations computer
SPS	Service propulsion system
SRS	Simulated remote sites
SSB	Single side band
sw	Switch
sw-lt	Switch-light
SXT	Sextant
TB	Talk back
TBD	To be defined
TBSL	To be supplied later
T/C	Telecommunications
T/L	Telemetry
TM	Telemetry
T/R	Transmit-receive
TV	Television
UDL	Up-data link
UDS	Up-data system
UPTL	Up-telemetry link
USBE	Unified S-band equipment
VCO	Voltage controlled oscillator
VHF	Verify high frequency
VOX	Voice operated
WWV	Naval observatory time standard (radio)