IBM FILE COPY

SATURN IB INSTRUMENTATION SYSTEMS DESCRIPTION

SA-206

DEPT. 958

GEORGE C. MARSHALL SPACE FLIGHT CENTER
ASTRIONICS LABORATORY - INSTRUMENTATION AND COMMUNICATIONS DIVISION
PLANNING AND ENGINEERING BRANCH

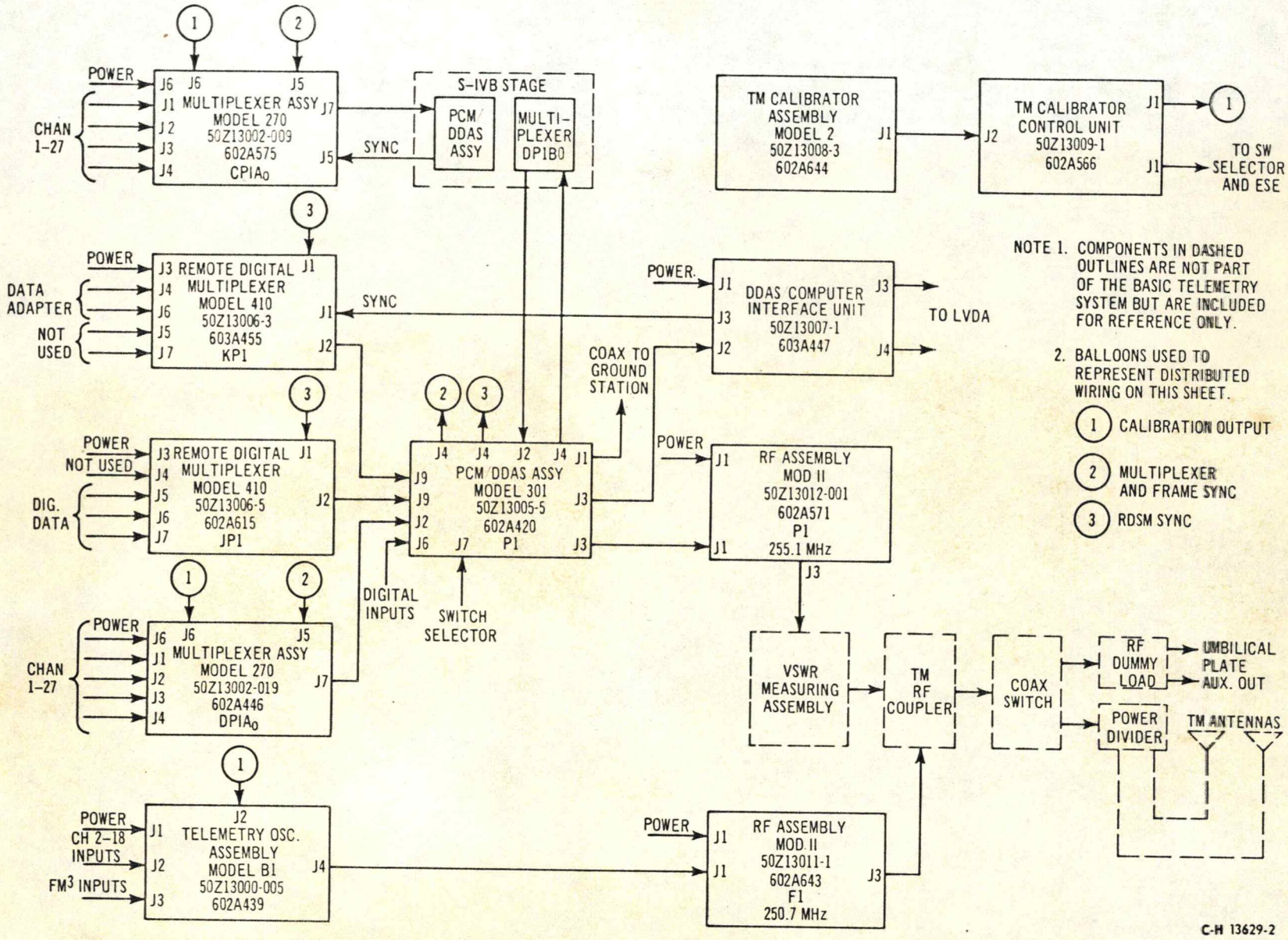

FIGURE 1-1A. S-IU TELEMETRY SYSTEM - BLOCK DIAGRAM - VEHICLE 206

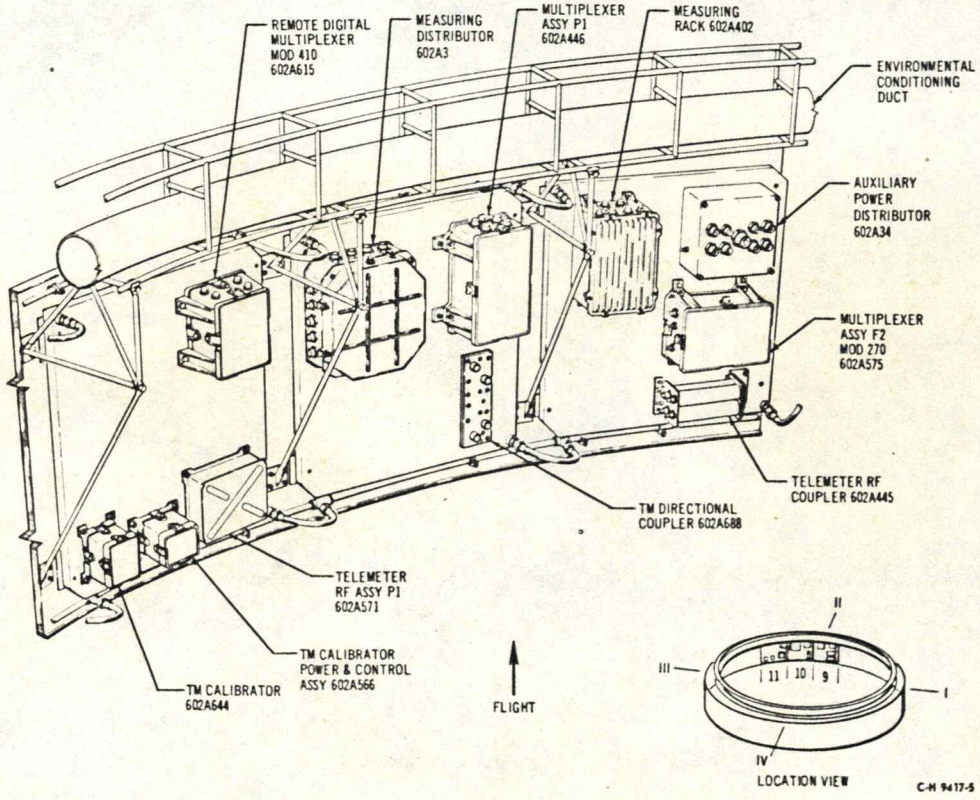

FIGURE 1-2. S-IU TELEMETRY SYSTEM - ASSEMBLY LOCATION DIAGRAM VEHICLES 205 AND 206

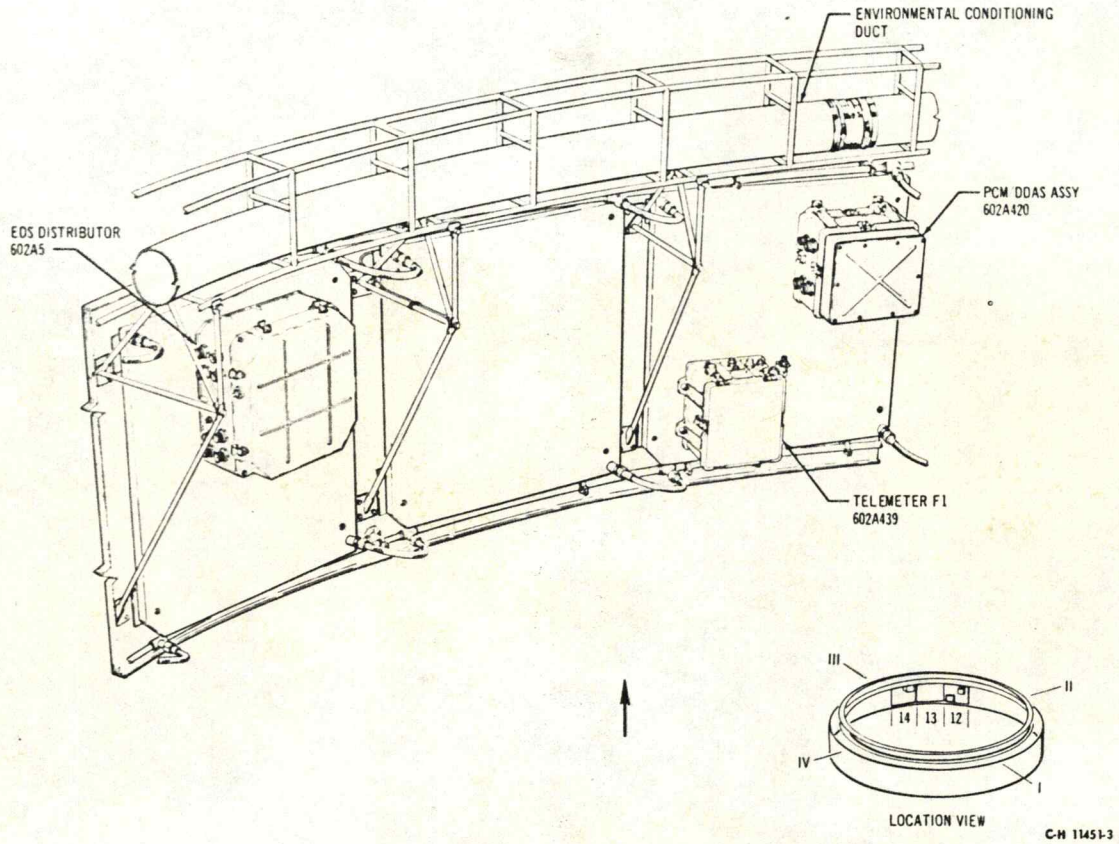

FIGURE 1-3. S-IU TELEMETRY SYSTEM - ASSEMBLY LOCATION DIAGRAM VEHICLES 205 AND 206

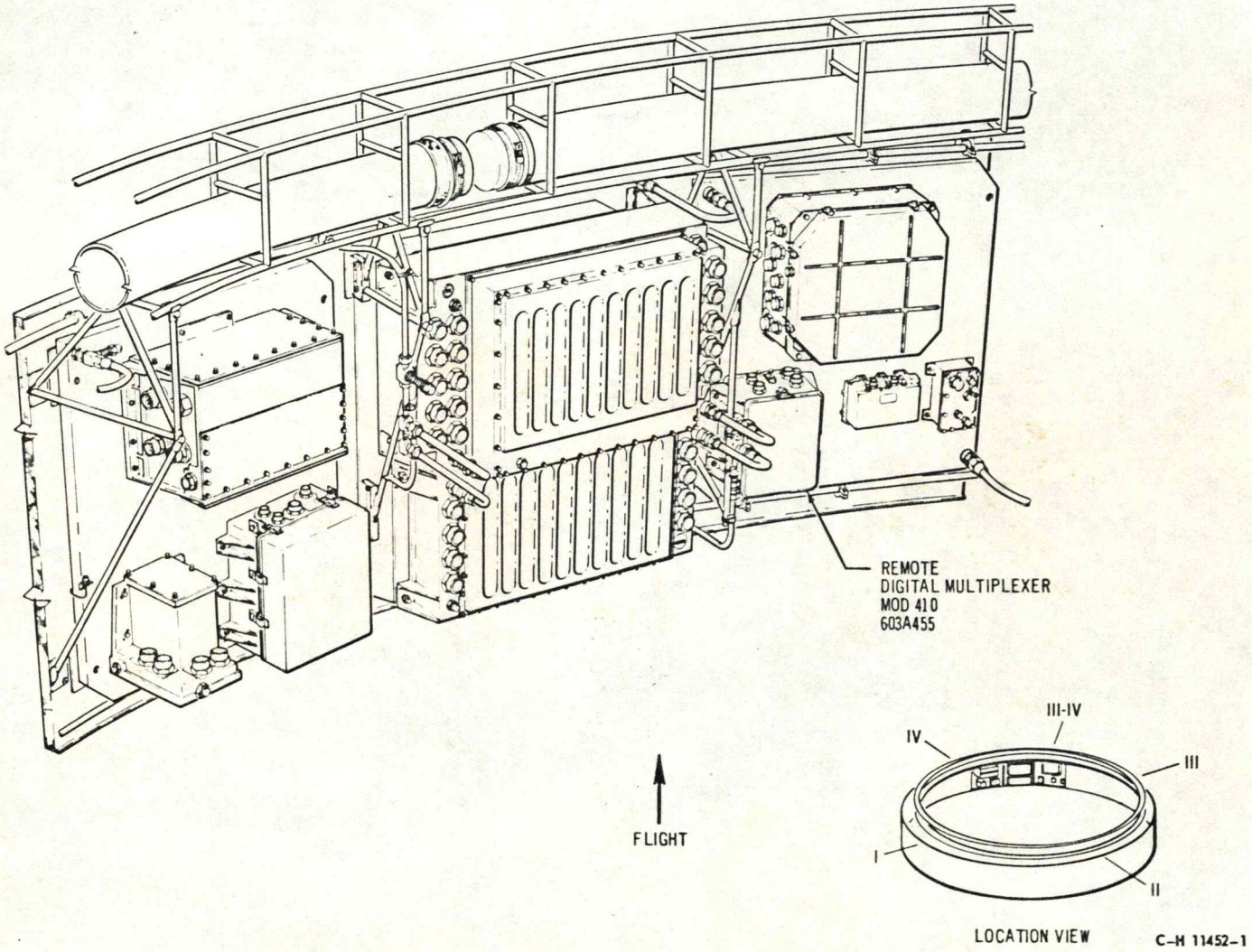

FIGURE 1-4. S-IU TELEMETRY SYSTEM - ASSEMBLY LOCATION DIAGRAM - VEHICLES 205 AND 206

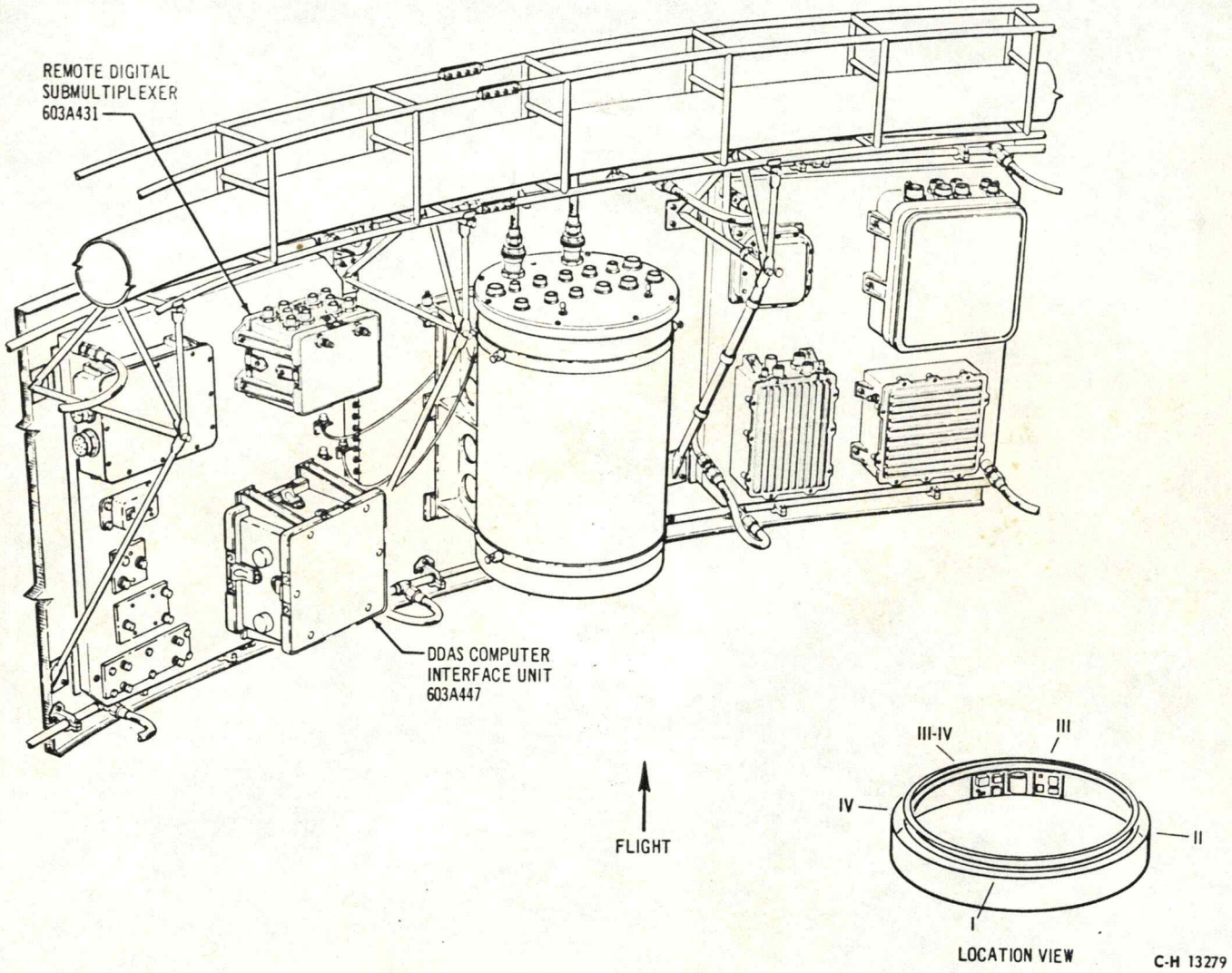

FIGURE 1-5. S-IU TELEMETRY SYSTEM - ASSEMBLY LOCATION DIAGRAM VEHICLES 205 AND 206

PCM/DDAS ASSEMBLY, MODEL 301
50Z13005-5 602A420

From		To			
Conn	Pin	Unit	Conn	Pin	Remarks
J1	A	Networks			600 KC DDAS
J2	A	Networks			Internal Shield
J2	B	50Z13002-009	J7	A	Com 1 PAM Wavetrain
J2	L	50Z13002-009	J7	D	Com 1 Common
J2	N	NC			Com 4 PAM Wavetrain
J2	K	NC			Com 4 Common
J2	R	NC			Internal Shield
J2	V	NC			External Shield
J2	J	Networks			Internal Shield
J2	C	S-IVB Interface	J1	DD	PAM Wavetrain No. 4
J2	M	S-IVB Interface	J1	EE	PAM Wavetrain No. 4 Com
J2	P	NC			Internal Shield
J2	D	NC			Com 3 PAM Wavetrain
J2	E	NC			Com 3 Common
J2	F	NC			Com 5 PAM Wavetrain
J2	U	NC			Com 5 Common
J2	G	NC			Internal Shield
J2	H	NC			Internal Shield
J2	S	NC			Com 6 PAM Wavetrain

PCM/DDAS ASSEMBLY, MODEL 301
50Z13005-5 602A420
(Continued)

From		To			
Conn	Pin	Unit	Conn	Pin	Remarks
J2	T	NC			Com 6 Common
J3	A	50Z13007-1	J2	A	Parallel PCM Output
J3	K			K	Parallel PCM Output
J3	L	50Z13007-1	J2	L	Parallel PCM Com
J3	U	Networks			Outer Shield
J3	M	50Z13012-001	J1	B	Serial PCM Output
J3	N	50Z13012-001	J1	A	Serial PCM Output
J3	T	Networks			Internal Shield
J3	S	NC			Bit Rate Output
J3	R	NC			Word Rate Output
J3	P	NC			Spare
J4	G	50Z13002-009	J5	C	Com 1 Sample Rate Sync
J4	H	50Z13002-009	J5	E	Com 1 Frame Sync
J4	J	50Z13002-009	J5	B	Com 1 Common
J4	X	Networks			Internal Shield
J4	F	50Z13006-5	J1	B	Com 2 Sample Rate Sync
J4	W	50Z13006-5	J1	J	Com 2 Frame Sync
J4	Y	50Z13006-5	J1	A	Com 2 Common
J4	b	NC			Internal Shield

PCM /DDAS ASSEMBLY, MODEL 301
50Z13005-5 602A420
(Continued)

From		To			
Conn	Pin	Unit	Conn	Pin	Remarks
J4	E	50Z13007-1	J3	C	Sample Rate Sync
J4	V	50Z13007-1	J3	J	GPA Frame Sync
J4	Z	50Z13007-1	J3	D	Sync Common
J4	N	Networks			Internal Shield
J4	D	S-IVB Interface	J1	BB	Mux Sample Rate Sync (Gp B)
J4	U	S-IVB Interface	J1	p	Mux Frame Sync (Gp B)
J4	a	S-IVB Interface	J1	AA	Mux Sync Com. (Gp B)
J4	M	Networks			Internal Shield
J4	B	NC			Com 5 Sample Rate Sync
J4	R	NC			Com 5 Frame Sync
J4	P	NC			Com 5 Common
J4	L	NC			Internal Shield
J4	C	NC			Com 6 Sample Rate Sync
J4	T	NC			Com 6 Frame Sync
J4	S	NC			Com 6 Common
J4	K	NC			Internal Shield
J4	c	Networks			External Shield to Gnd
J4	A	NC			Spare
J5	A	Networks			28V Common (6D Com Bus)
J5	B	Networks			+28V DC (6D31 Bus)

From		To			
Conn	Pin	Unit	Conn	Pin	Remarks
J5	C	NC			Mode Control Volt Common
J5	D	NC			Mode 2 Control Voltage
J5	E	NC			Mode 3 Control Voltage
J6	A	NC			Remote 1 Count D
J6	B				Remote 1 Count C
J6	C				Remote 1 Count B
J6	D				Remote 1 Count A
J6	E				Remote 1 3.6 KC Sync
J6	F				Remote 1 Common
J6	G				Internal Shield
J6	j				External Shield
J6	H	NC			Remote 2, 3, & 4 Counts
↓	↓	↓		↓	
J6	h	NC			Remote 2, 3, & 4 Counts
J7	E	50Z13006-3	J2	D	Digital Word #1
J7	F	50Z13006-3	J2	E	Digital Word #1
J7	G	50Z13006-3	J2	F	Digital Word #1
J7	H	50Z13006-3	J2	G	Digital Word #1
J7	J	50Z13006-3	J2	H	Digital Word #1
J7	K	50Z13006-3	J2	J	Digital Word #1

From		To			
Conn	Pin	Unit	Conn	Pin	Remarks
J7	L	50Z13006-3	J2	T	Digital Word #1
J7	M	50Z13006-3	J2	S	Digital Word #1
J7	N	50Z13006-3	J2	R	Digital Word #1
J7	P	50Z13006-3	J2	P	Digital Word #1
J7	HH				Chassis Gnd
J8		Networks			Digital Words #6, 7
J9	E	NC			Digital Word #10
J9	F				
J9	b				
J9	G				
J9	H				
J9	J				
J9	e				
J9	K				
J9	L				
J9	M				Digital Word #10
J9	D				Digital Word #10 Common
J9	HH	Networks			External Shield
J9	P	50Z13006-5	J2	D	Digital Word #8

PCM/DDAS ASSEMBLY, MODEL 301
50Z13005-5 602A420
(Continued)

From		To			
Conn	Pin	Unit	Conn	Pin	Remarks
J9	i	50Z13006-5	J2	E	Digital Word #8
J9	x	50Z13006-5	J2	F	
J9	w	50Z13006-5	J2	G	
J9	EE	50Z13006-5	J2	H	
J9	u	50Z13006-5	J2	J	
J9	DD	50Z13006-5	J2	T	
J9	s	50Z13006-5	J2	S	
J9	r	50Z13006-5	J2	R	
J9	X	50Z13006-5	J2	P	Digital Word #8
J9	Remaining	NC			Spare

REMOTE DIGITAL MULTIPLEXER, MODEL 410
50Z13006-5 (J) 602A615

From		To			Remarks
Conn	Pin	Unit	Conn	Pin	
J1	A	50Z13005-5	J4	Y	Sync Common
J1	B	50Z13005-5	J4	F	Gp A Sample Rate Sync
J1	J	50Z13005-5	J4	W	Frame Sync
J1	C	NC			NC
J1	D	NC			NC
J1	E	NC			NC
J1	F	NC			NC
J1	G	NC			NC
J1	H	NC			NC
J1	K	NC			NC
J2	C	NC			Digital Common
J2	D	50Z13005-5	J9	P	Digital Output
J2	E	50Z13005-5	J9	i	
J2	F	50Z13005-5	J9	x	
J2	G	50Z13005-5	J9	w	
J2	H	50Z13005-5	J9	EE	
J2	J	50Z13005-5	J9	u	
J2	T	50Z13005-5	J9	DD	
J2	S	50Z13005-5	J9	s	
J2	R	50Z13005-5	J9	r	Digital Output

REMOTE DIGITAL MULTIPLEXER, MODEL 410
50Z13006-5 (J) 602A615
(Continued)

From		To			
Conn	Pin	Unit	Conn	Pin	Remarks
J2	P	50Z13005-5	J9	X	Digital Output
J3	A	Networks			28V Common (6D Com Bus)
J3	B	Networks			+28V DC (+6D41 Bus)
J3	C	NC			NC
J3	D	NC			NC
J3	E	NC			NC
J4	A	NC			Sync Output
J4	B	NC			Sync Output Return
J4	C	NC			Spare
J4	D	NC			External Shield
J5		Networks			Data Group Inputs
J6		Networks			Data Group Inputs
J7		Networks			Data Group Inputs

REMOTE DIGITAL MULTIPLEXER, MODEL 410
50Z13006-3 (K) 603A455

From		To			
Conn	Pin	Unit	Conn	Pin	Remarks
J1	A	NC			Digital Common
J1	B	NC			Gp A Sample Rate Sync
J1	J	NC			Frame Sync
J1	C	50Z13007-1	J3	B	3600PPS Sync
J1	D	50Z13007-1	J3	A	Sync Common
J1	E	NC			NC
J1	F	50Z13007-1	J3	F	4PPS Sync
J1	G	NC			NC
J1	H	NC			NC
J1	K	NC			NC
J2	C	NC			Digital Common
J2	D	50Z13005-5	J7	E	Digital Output
J2	E	50Z13005-5	J7	F	
J2	F	50Z13005-5	J7	G	
J2	G	50Z13005-5	J7	H	
J2	H	50Z13005-5	J7	J	
J2	J	50Z13005-5	J7	K	
J2	T	50Z13005-5	J7	L	
J2	S	50Z13005-5	J7	m	
J2	R	50Z13005-5	J7	N	Digital Output

REMOTE DIGITAL MULTIPLEXER, MODEL 410
50Z13006-3 603A455
(Continued)

From		To			
Conn	Pin	Unit	Conn	Pin	Remarks
J2	P	50Z13005-5	J7	P	Digital Output
J3	A	Networks			28V Common (6D Com Bus)
J3	B	Networks			+28V DC (+6D31 Bus)
J3	C	NC			NC
J3	D	NC			NC
J3	E	NC			NC
J4	A	Networks			Sync Output
J4	B	Networks			Sync Output Return
J4	C	NC			NC
J4	D	NC			NC
J5		NC			Spare
J6		Networks			External Digital Inputs
J7		NC			External Digital Inputs

MULTIPLEXER ASSEMBLY, MODEL 270
LINK CP1
50Z13002-009 602A575

From		To			
Conn	Pin	Unit	Conn	Pin	Remarks
J1 ↓ J4	-	Meas Dist ↓ Meas Dist	-	-	Data Channel Inputs ↓ Data Channel Inputs
J5	A	NC			Spare
J5	B	S-IVB Interface	J1	CC	GRP Frame Sync. Common
J5	C	S-IVB Interface	J1	r	GRP Sample Rate Sync.
J5	E	S-IVB Interface	J1	s	Group B Frame Sync.
J5	D	NC			Int Clock
J5	F	NC			MMP
J5	G	NC			Spare
J5	H	NC			Spare
J5	J	NC			Int Frame Sync
J5	K	NC			Spare
J6	A	Networks			28V Common (6D Bus)
J6	D	Networks			28V DC (+6D11 Bus)
J6	C	NC			PAM W/PED
J6	B	NC			Signal Common
J6	E	Networks			+5V Exts (+6D81 Bus)
J6	F	50Z13009-1	J1	H	Cal Comd.

MULTIPLEXER ASSEMBLY, MODEL 270
LINK CP1
50Z13002-009 602A575
(Continued)

From		To			Remarks
Conn	Pin	Unit	Conn	Pin	
J7	A	S-IVB Interface	J1	FF	PAM Wavetrain No. 4
J7	D	S-IVB Interface	J1	GG	PAM Wavetrain No. 4 Return
J7	B	NC			Spare
J7	C	NC			Spare

MULTIPLEXER ASSEMBLY, MODEL 270
LINK DP1
50Z13002-019 602A446

From		To			
Conn	Pin	Unit	Conn	Pin	Remarks
J1	-	Meas Dist	-	-	Data Channel Inputs
↓		↓			↓
J4	-	Meas Dist	-	-	Data Channel Inputs
J5	A	NC			Spare
J5	B	50Z13005-5	J4	J	Signal Common
J5	C	50Z13005-5	J4	G	Ext Clock 3.6 KC
J5	E	50Z13005-5	J4	H	Ext Frame Sync
J5	D	NC			Int Clock
J5	F	NC			MMP
J5	G	NC			Spare
J5	H	NC			Spare
J5	J	NC			Int Frame Sync
J5	K	NC			Spare
J6	A	Networks			28V Common (6D Bus)
J6	D	Networks			28V DC (+6D31 Bus)
J6	C	NC			PAM W/PED
J6	B	NC			Signal Common
J6	E	Networks			+5V Exts (+6D81 Bus)
J6	F	50Z13009-1	J1	J	Cal Command

MULTIPLEXER ASSEMBLY, MODEL 270
LINK DP1
50Z13002-019 602A446
(Continued)

From		To			
Conn	Pin	Unit	Conn	Pin	Remarks
J7	A	50Z13005-5	J2	B	PAM W/O PED
J7	D	50Z13005-5	J2	L	Signal Common
J7	B	NC			Spare
J7	C	NC			Spare

TELEMETRY OSCILLATOR ASSEMBLY, MODEL B1
LINK F1
50Z13000-005 602A439

From		To			
Conn	Pin	Unit	Conn	Pin	Remarks
J1	A	Networks			28V Common (6D Bus)
J1	B	Networks			+28V DC (+6D31 Bus)
J1	C	NC			Spare
J2	A	Networks (meas com)			6D81 Com
J2	B	Meas Dist			Data Channel Inputs
↓	↓	↓			↓
J2	R	Meas Dist			Data Channel Inputs
J2	S	Meas Dist			↓
J2	T	NC			Spare
J2	U	Meas Dist			Data Chan Input
J2	V	50Z13009-1	J1	D	28V DC Preflight
J2	W	50Z13009-1	J1	G	Inflight Cal Cont
J2	X	NC			Withhold Cont
J2	Y	NC			Spare
J2	Z	50Z13009-1	J1	e	Cal Cont Return
J2	a	NC			Spare
J2	b	50Z13009-1	J1	E	Cal Bus
J2	C	NC			Spare
J3	A	NC			Data Channel Inputs
↓	↓	↓			↓
J3	M	NC			Data Channel Inputs

TELEMETRY OSCILLATOR ASSEMBLY, MODEL B1
LINK F1
50Z13000-005 602A439
(Continued)

From		To			Remarks
Conn	Pin	Unit	Conn	Pin	
J4	A	50Z130011-1	J1	A	Output 1
J4	B	50Z130011-1	J1	B	Output 1
J4	C	NC			Output 2
J4	D	NC			Output 2
J4	E	NC			Spare
J4	F	Networks			Shield

RF ASSEMBLY, MODEL II
LINK F1
50Z130011-1 602A643

From		To			Remarks
Conn	Pin	Unit	Conn	Pin	
J1	A	50Z13000-005	J4	A	Serial PCM Input
J1	B	50Z13000-005	J4	B	Serial PCM Input
J1	C	NC			Spare
J1	D	NC			Spare
J1	E	NC			Spare
J1	F	NC			Spare
J1	G	NC			Spare
J1	H	Networks			Ground
J1	J	Networks			28V DC Com (6D Com)
J1	L	Networks			+28V DC (+6D31 Bus)
J1	K	Networks			28V DC Com (6D Com)
J1	M	Networks			+28V DC (+6D31 Bus)
J2		NC			Spare
J3	A	TM RF Coupler	J1	A	Signal Output

RF ASSEMBLY, MODEL II
LINK P1
50Z130012-1 602A571

From		To			
Conn	Pin	Unit	Conn	Pin	Remarks
J1	A	50Z13005-5	J3	N	Serial PCM Input
J1	B	50Z13005-5	J3	M	Serial PCM Input
J1	C	NC			Spare
J1	D	NC			Spare
J1	E	NC			Spare
J1	F	NC			Spare
J1	G	NC			Spare
J1	H	NC			Spare
J1	J	Networks			28V DC Com (6D Com)
J1	L	Networks			+28V DC (+6D31 Bus)
J1	K	Networks			28V DC Com (6D Com)
J1	M	Networks			+28V DC (+6D31 Bus)
J2		NC			Spare
J3	A	TM Directional Coupler	J2	A	Signal Output

TM CALIBRATOR, MODEL II
50Z13008-3 602A644

From		To			
Conn	Pin	Unit	Conn	Pin	Remarks
J1	A	50Z13009-1	J2	A	Preflight Cal Level
J1	V	50Z13009-1	J2	V	Preflight Cal Level Return
J1	B	50Z13009-1	J2	B	Console Cal Command
J1	C	50Z13009-1	J2	C	Prog Dev Cal Command
J1	D	50Z13009-1	J2	D	Preflight - Inflight Line
J1	E	50Z13009-1	J2	E	Cal Output
J1	F	NC			Cal Control 1
J1	G	50Z13009-1	J2	G	Cal Control 2
J1	H	50Z13009-1	J2	H	Cal Control 3
J1	J	50Z13009-1	J2	J	Cal Control 4
J1	K	NC			Cal Control 5
J1	L	NC			Cal Control 6
J1	M	NC			SS/FM Cal Control 3
J1	N	NC			Spare
J1	P	50Z13009-1	J2	P	Minus Meas
J1	R	50Z13009-1	J2	R	Plus Meas
J1	S	50Z13009-1	J2	S	Reg. 28V Return
J1	T	50Z13009-1	J2	T	Reg. +28V
J1	U	NC			SS/FM Sweep Cal in
J1	W	NC			SS/FM Sweep Cal in

From		To			Remarks
Conn	Pin	Unit	Conn	Pin	
J1	X	NC			
J1	Y	NC			
J1	Z	NC			
J1	a	NC			SS/FM Cal Output 1
J1	b	NC			SS/FM Cal Output 3
J1	c	NC			SS/FM Cal Output 2

CALIBRATOR POWER & CONTROL
50Z13009-1 602A566

From		To			Remarks
Conn	Pin	Unit	Conn	Pin	
J1	A	Networks			Preflt Cal Levels
J1	V	Networks			Preflt Cal Level Return
J1	B	Networks			Console Cal Command
J1	C	Networks			Pgm Dev Cal Command (+6D41 Bus)
J1	D	Networks			Preflt/Inflt Command
J1	D	50Z13000-005	J2	V	Preflt/Inflt Command
J1	E	Networks			Cal Output
J1	E	50Z13000-005	J2	b	Cal Output
J1	F	NC			Cal Control 1
J1	G	50Z13000-005	J2	W	Cal Control 2
J1	H	50Z13002-009	J6	F	Cal Control 3
J1	J	50Z13002-019	J6	F	Cal Control 4
J1	K	NC			Cal Control 5
J1	L	NC			Cal Control 6
J1	M	NC			SS/FM Cal Control 3
J1	N	Shields			Ground
J1	P	Networks			Minus Meas (6D81 Com Bus)
J1	R	Networks			Plus Meas (+6D81 Bus)
J1	S	Networks			Common (6D Com Bus)
J1	T	Networks			28V DC (+6D41 Bus)

CALIBRATOR POWER & CONTROL
50Z13009-1 602A566
(Continued)

From		To			
Conn	Pin	Unit	Conn	Pin	Remarks
J1	U	NC			SS/FM Sweep Cal Common
J1	W	NC			SS/FM Cal in
J1	X	NC			SS/FM Preflt Cal Command
J1	Y	NC			SS/FM Cal Cont 1
J1	Z	NC			SS/FM Cal Cont 2
J1	a	NC			SS/FM Cal Out 1
J1	b	NC			SS/FM Cal Out 3
J1	c	NC			SS/FM Cal Out 2
J1	d	NC			Cal Cont 1 Return
J1	e	50Z13000-005	J2	Z	Cal Cont 2 Return
J1	f	NC			Cal Cont 3 Return
J1	g	NC			Cal Cont 4 Return
J1	h	NC			Cal Cont 5 Return
J1	j	NC			Cal Cont 6 Return
J2	A	50Z13008-3	J1	A	Preflt Cal Levels
J2	V	50Z13008-3	J1	V	Preflt Cal Levels Return
J2	B	50Z13008-3	J1	B	Console Cal Command
J2	C	50Z13008-3	J1	C	Pgm Dev Cal Command
J2	D	50Z13008-3	J1	D	Preflt/Inflt Command
	E	50Z13008-3	J1	E	Cal Output

CALIBRATOR POWER & CONTROL
50Z13009-1 602A566
(Continued)

From		To			Remarks
Conn	Pin	Unit	Conn	Pin	
J2	F	NC			Cal Control 1
J2	G	50Z13008-3	J1	G	Cal Control 2
J2	H	50Z13008-3	J1	H	Cal Control 3
J2	J	50Z13008-3	J1	J	Cal Control 4
J2	K	NC			Cal Control 5
J2	L	NC			Cal Control 6
J2	M	NC			SS/FM Cal Cont 3
J2	N	Shield			Chassis Ground (Point 1602)
J2	P	50Z13008-3	J1	P	Minus Meas
J2	R	50Z13008-3	J1	R	Plus Meas
J2	S	50Z13008-3	J1	S	Reg 28V Return
J2	T	50Z13008-3	J1	T	Reg +28V DC
J2	U	NC			SS/FM Sweep Cal Common
J2	W	NC			SS/FM Sweep Cal in
J2	X	NC			SS/FM Preflt Cal Command
J2	Y	NC			SS/FM Cal Cont 1
J2	Z	NC			SS/FM Cal Cont 2
J2	a	NC			SS/FM Cal Out 1
J2	b	NC			SS/FM Cal Out 3
J2	c	NC			SS/FM Cal Out 2

COMPUTER INTERFACE UNIT
50Z13007-1 603A447

From		To			Remarks
Conn	Pin	Unit	Conn	Pin	
J1	A	Networks			28V DC Common (6D Com Bus)
J1	B	Networks			+28V DC (+6D31 Bus)
J1	C	NC			
J1	D	NC			
J1	E	NC			
J2	A	50Z13005-5	J3	A	Data Input
J2	B		J3	B	
J2	C		J3	C	
J2	D		J3	D	
J2	E		J3	E	
J2	F		J3	F	
J2	G		J3	G	
J2	H		J3	H	
J2	J		J3	J	
J2	K		J3	K	Data Input
J2	L		J3	L	Data Input Common
J2	M	NC			
J2	N	NC			
J2	R	NC			
J2	S	NC			

COMPUTER INTERFACE UNIT
50Z13007-1 603A447
(Continued)

From		To			
Conn	Pin	Unit	Conn	Pin	Remarks
J2	T	NC			
J2	U	NC			Chassis Grd
J2	P	NC			
J3	A	50Z13006-3	J1	D	Sync Common
J3	B	50Z13006-3	J1	C	3600 pps Sync
J3	F	50Z13006-3	J1	F	4 pps Sync
J3	K	NC			Chassis Gnd
J3	C	50Z13005-5	J4	E	Sample Rate Sync
J3	D	50Z13005-5	J4	Z	Sync Common
J3	J	50Z13005-5	J4	V	Gp A Frame Sync
J3	F	NC			4 pps Sync
J3	G	NC			Spare
J3	H	NC			Spare
J4	A	Networks			Data Output
J4	B				
J4	C				
J4	D				
J4	E				
J4	F	Networks			Data Output

COMPUTER INTERFACE UNIT
50Z13007-1 603A447
(Continued)

From		To			
Conn	Pin	Unit	Conn	Pin	Remarks
J4	G	Networks			Data Output
J4	H				
J4	J				
J4	K	Networks			Data Output
J4	L	Networks			Data Common
J4	M	Networks			Data Ready Signal
J4	N	NC			Data Output Common
J4	R	NC			Spare
J4	S	NC			Spare
J4	T	NC			Spare
J4	U	NC			Chassis Ground
J4	P	NC			Spare
J5	A	Networks			Address Bit
J5	B				
J5	C				
J5	D				
J5	E				
J5	F				
J5	G				
J5	H	Networks			Address Bit

COMPUTER INTERFACE UNIT
50Z13007-1 603A447
(Continued)

From		To			Remarks
Conn	Pin	Unit	Conn	Pin	
J5	J	Networks			Address Bit
J5	K				
J5	L				
J5	M	Networks			Address Bit
J5	R	Networks			Data Request Signal
J5	U	NC			Chassis Gnd
J5	N	NC			Address Input Common
J5	P	NC			Address Input Common
J5	S	NC			Spare
J5	T	NC			Spare

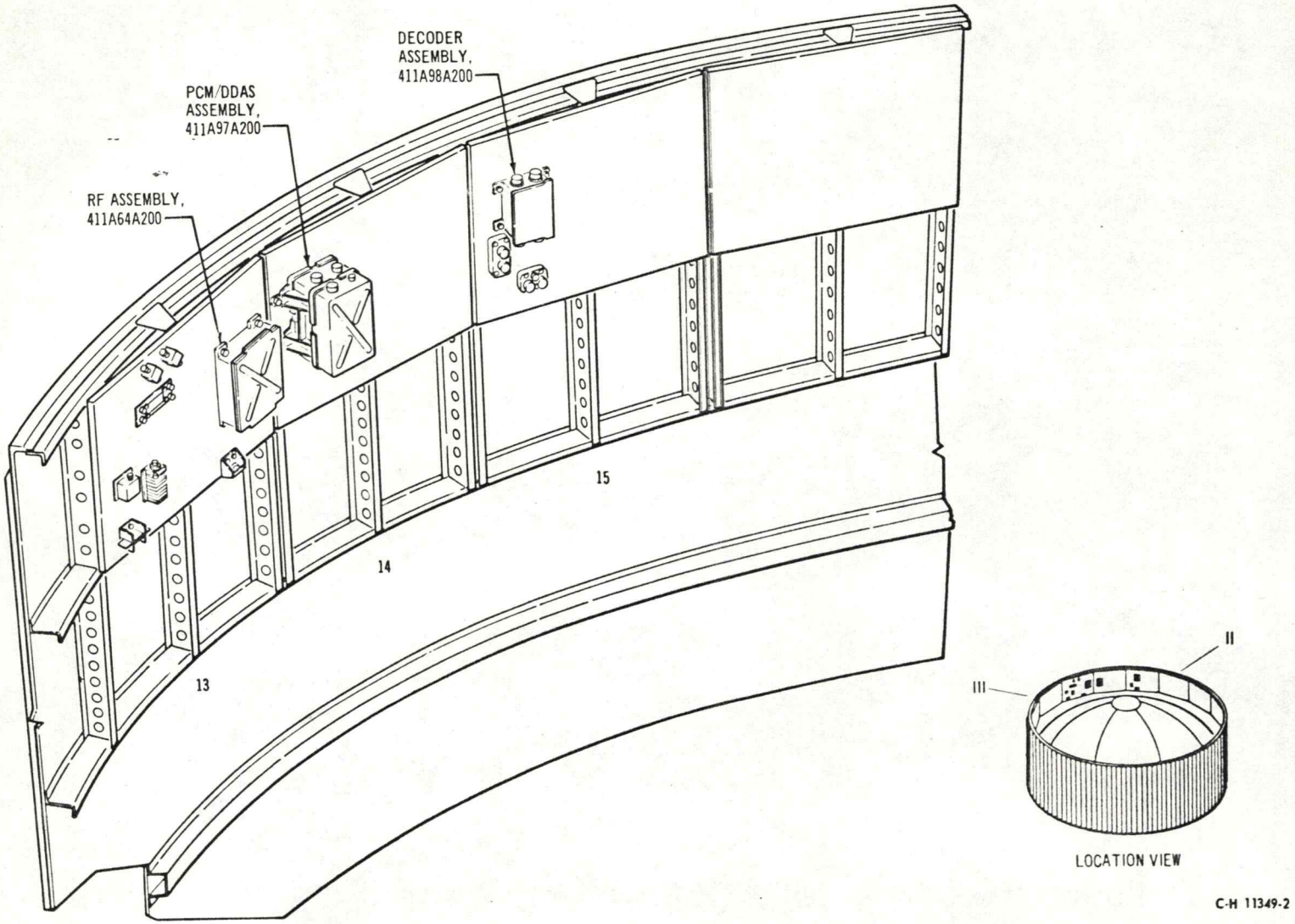

FIGURE 2-2. S-IVB TELEMETRY SYSTEM - ASSEMBLY LOCATION DIAGRAM - FORWARD SKIRT - VEHICLES AS-205 AND AS-206

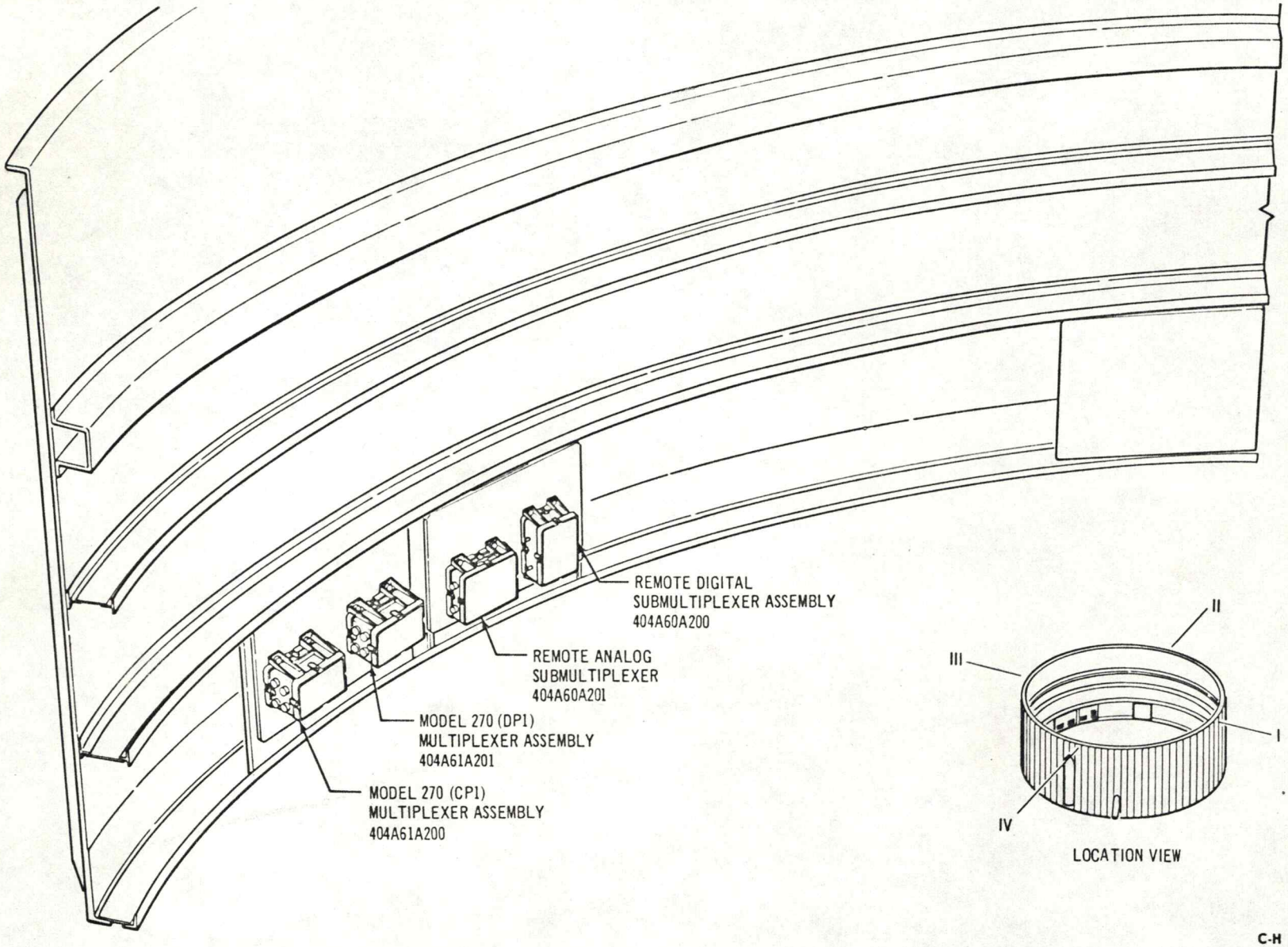

FIGURE 2-3. S-IVB TELEMETRY SYSTEM - ASSEMBLY LOCATION DIAGRAM - AFT SKIRT - VEHICLES AS-205 AND AS-206

PCM/DDAS, MODEL 301
LINK P1
1A74049-511 411A97A200

From		To			
Conn	Pin	Unit	Conn	Pin	Remarks
J1	Center	Networks			600 KC DDAS to GSE
J2	B	1B62513-507	J7	A	PAM W/O PED.
J2	P	1B62513-507	J7	D	Common
J2	V	External Shield			Ground
J2	C	IU Interface	J1	FF	BO Mux PAM No. 4
J2	R	IU Interface	J1	GG	BO Mux Return
J2	RMDR	NC			Spare
J3	M	1B52721-509	J1	B	Serial PCM Output
J3	N	1B52721-509	J1	A	Serial PCM Output
J3	T	External Shield			Ground
J3	RMDR	NC			Spare
J4	D	1B62513-507	J5	C	3.6 KC Clock
J4	U	1B62513-507	J5	E	Frame Sync
J4	a	1B62513-507	J5	B	Common
J4	M	Internal Shield			Ground
J4	c	External Shield			Ground
J4	F	IU Interface	J1	r	Gp B Sample Rate Sync
J4	W	IU Interface	J1	s	Gp B Frame Sync
J4	Y	IU Interface	J1	CC	Gp B Meas. Return

PCM/DDAS, MODEL 301
LINK P1
1A74049-511 411A97A200
(Continued)

From		To			
Conn	Pin	Unit	Conn	Pin	Remarks
J4	b	Internal Shield			Ground
J4	RMDR	NC			Spare
J5	A	Networks			28 VDC Return
J5	B	Networks			+28 VDC +4D31.1 Bus
J5	RMDR	NC			Spare
J6	E	1B52894-1	J2	L	3.6 KC
J6	D	1B52894-1	J2	Y	PCM A
J6	C	1B52894-1	J2	M	PCM B
J6	B	1B52894-1	J2	V	PCM C
J6	A	1B52894-1	J2	D	PCM D
J6	F	1B52894-1	J2	X	PCM Common
J6	j	External Shield			Ground
J6	RMDR	NC			Spare
J7	E	1B52894-1	J2	K	Digital Inputs
J7	F	1B52894-1	J2	J	
J7	G	1B52894-1	J2	H	
J7	H	1B52894-1	J2	G	
J7	J	1B52894-1	J2	F	
J7	K	1B52894-1	J2	a	

MULTIPLEXER, MODEL 270
CP1BO
1B62513-507 404A61A200

From		To			Remarks
Conn	Pin	Unit	Conn	Pin	
J1		Networks			Data Inputs
J2		Networks			Data Inputs
J3		Networks			Data Inputs
J4		Networks			Data Inputs
J5	B	1A74049-511	J4	a	Common
J5	C	1A74049-511	J4	D	3.6 KC Clock
J5	E	1A74049-511	J4	U	Ext. Frame Sync
J5	RMDR	NC			Spare
J6	F	Sequencer	J7	N	Calibrate Command
J6	A	Networks			28 VDC Return
J6	D	Networks			+28 VDC +4D31.1 Bus
J6	E	Networks			+5 VDC +4D82 Bus
J6	RMDR	NC			Spare
J7	A	1A74049-511	J2	B	PAM W/O PED
J7	D	1A74049-511	J2	P	Common
J7	RMDR	NC			Spare

MULTIPLEXER, MODEL 270
DP1BO
1B62513-509 404A61A201

From		To			
Conn	Pin	Unit	Conn	Pin	Remarks
J1	b	1B54062-503	J5	A	Data Inputs
J1	c	1B54062-503	J5	B	Data Inputs
J1	C	1B54062-503	J5	C	Data Inputs
J1	B	1B54062-503	J5	D	Data Inputs
J1	RMDR	Networks			Data Inputs
J2		Networks			Data Inputs
J3		Networks			Data Inputs
J4		Networks			Data Inputs
J5	D	1B54062-503	J6	A	Clock
J5	J	1B54062-503	J6	D	Frame Sync
J5	B	IU Interface	J1	AA	GpB Sync Return
J5	C	IU Interface	J1	BB	GpB Sample Rate Sync
J5	E	IU Interface	J1	p	GpB Frame Sync
J5	RMDR	NC			Spare
J6	A	Networks			28 VDC Return
J6	D	Networks			+28 VDC +4D31.1 Bus
J6	E	Networks			+5 VDC +4D82 Bus
J6	F	Sequencer	J7	M	Calibrate Command
J6	RMDR	NC			Spare

MULTIPLEXER, MODEL 270
DP1BO
1B62513-509 404A61A201
(Continued)

From		To			Remarks
Conn	Pin	Unit	Conn	Pin	
J7	D	IU Interface	J1	EE	Pam Ret.
J7	A	IU Interface	J1	DD	PAM W/O-P

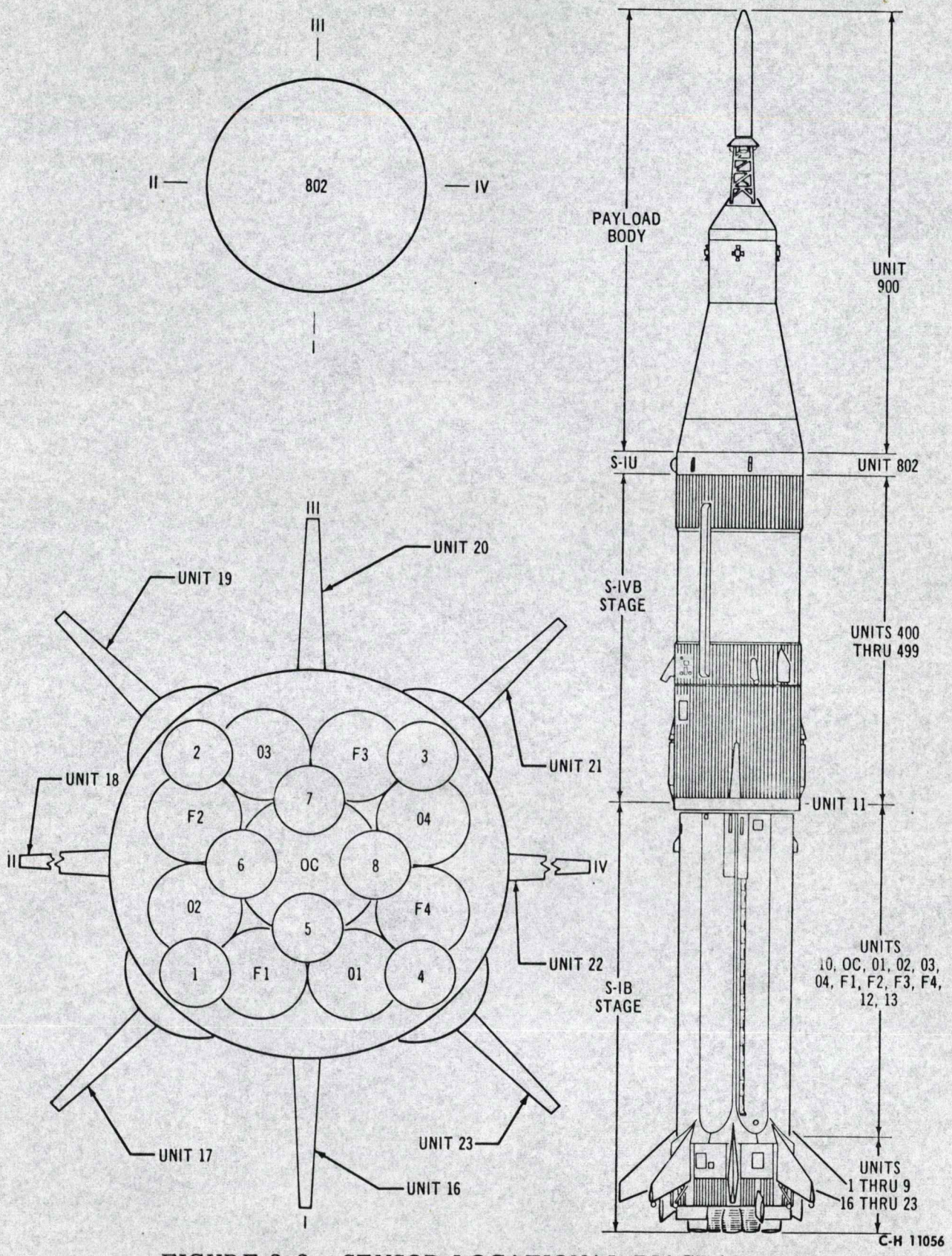

FIGURE 2-2. SENSOR LOCATIONAL DIAGRAM

ANGLE-OF-ATTACK AND DYNAMIC PRESSURE MEASUREMENTS

Q-Ball. The Q-Ball system, mounted directly into the air stream on the forward end of the launch escape system, provides measurements to the emergency detection systems (EDS). Basically, the Q-Ball system (figure 2-22) consists of a front spherical section with an aft cone which contains pressure transducers, four pressure sensing ports (four far angle-of-attack), and an electronics package. The forward section of the Q-Ball contains the nose cap, the pneumatic manifolding, and the transducer package.

The four angle-of-attack sensing ports are located in a circular pattern around the nose cap, with one port at each fin line.

The basic parameter that the Q-Ball measures is differential pressure, proportional to the product of angle-of-attack (pitch and yaw, $\Delta P = K\alpha g$). Any deviation from the planned course will create unequal pressures that are transmitted through the pressure tubes to the transducers in the Q-Ball system.

The output signals of the pressure transducers are processed in two manners. First, the signals are combined in a vector summary circuit to provide a signal to be displayed in the Apollo capsule as an EDS slow divergence failure mode detector. Secondly, the transducer signals are processed through amplifiers to provide high level and low output impedance signals which are telemetered from the IU to ground receiving stations.

Q-Ball Cover. The Q-Ball cover (figure 2-23) protects the Q-Ball against weather, contamination, and other damage prior to launch. The cover consists of a rigid, conical, fiberglass shell and a soft fiberglass cloth that encloses an inflatable nylon liner. The shell is equipped with a fitting for attaching an inflation hose and with two rings for attaching a retractor cable and a shock cord. A weight ring is mounted in the base of the shell to eliminate the need for mechanically connecting the cover to the vehicle.

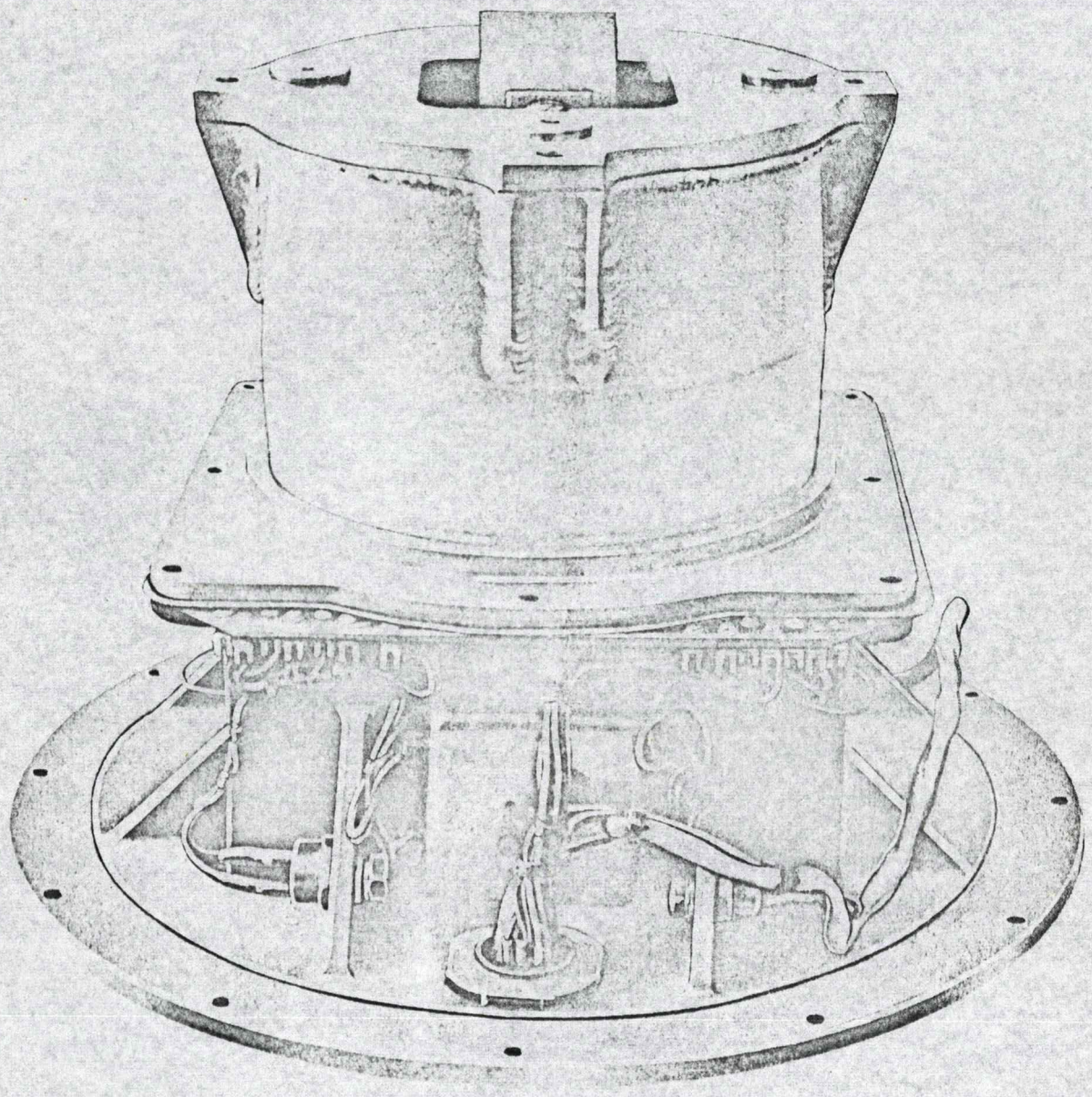

C-H 11892

FIGURE 2-22. Q-BALL TRANSDUCER ASSEMBLY

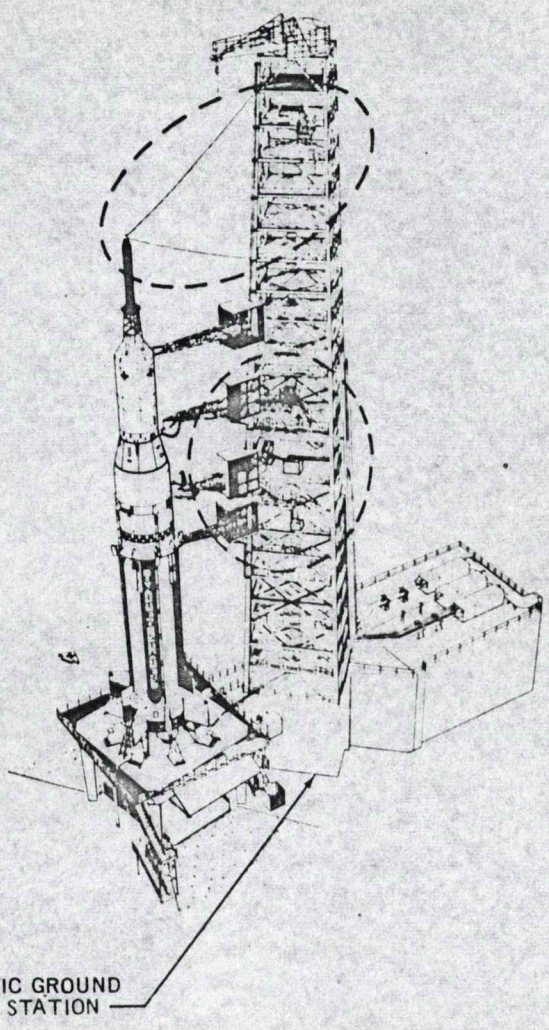

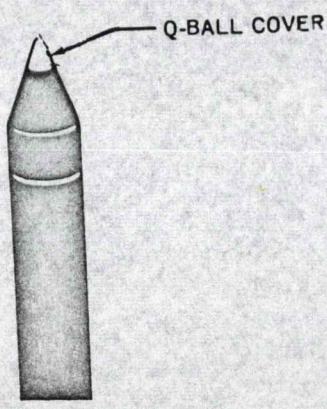

FIGURE 2-23. Q-BALL COVER, LOCATIONAL VIEW