SKYLAB
EXPERIMENT BRIEFING

S191 INFRARED SPECTROMETER

Instructor
M. Tanner

SKYLAB CREW PREFLIGHT TRAINING

FOR TRAINING PURPOSES ONLY

MARTIN MARIETTA
DENVER DIVISION

INFRARED SPECTROMETER S191 OBJECTIVE

TO QUANTITATIVELY EVALUATE EARTH RESOURSES SENSING FROM ORBITAL ALTITUDE IN TWO SPECTRAL RANGES.....

- 0.4 TO 2.4 MICRONS
- 6.2 TO 15.5 MICRONS

MDA INTERIOR VIEW

FOR TRAINING PURPOSES ONLY

MARTIN MARIETTA

DENVER DIVISION

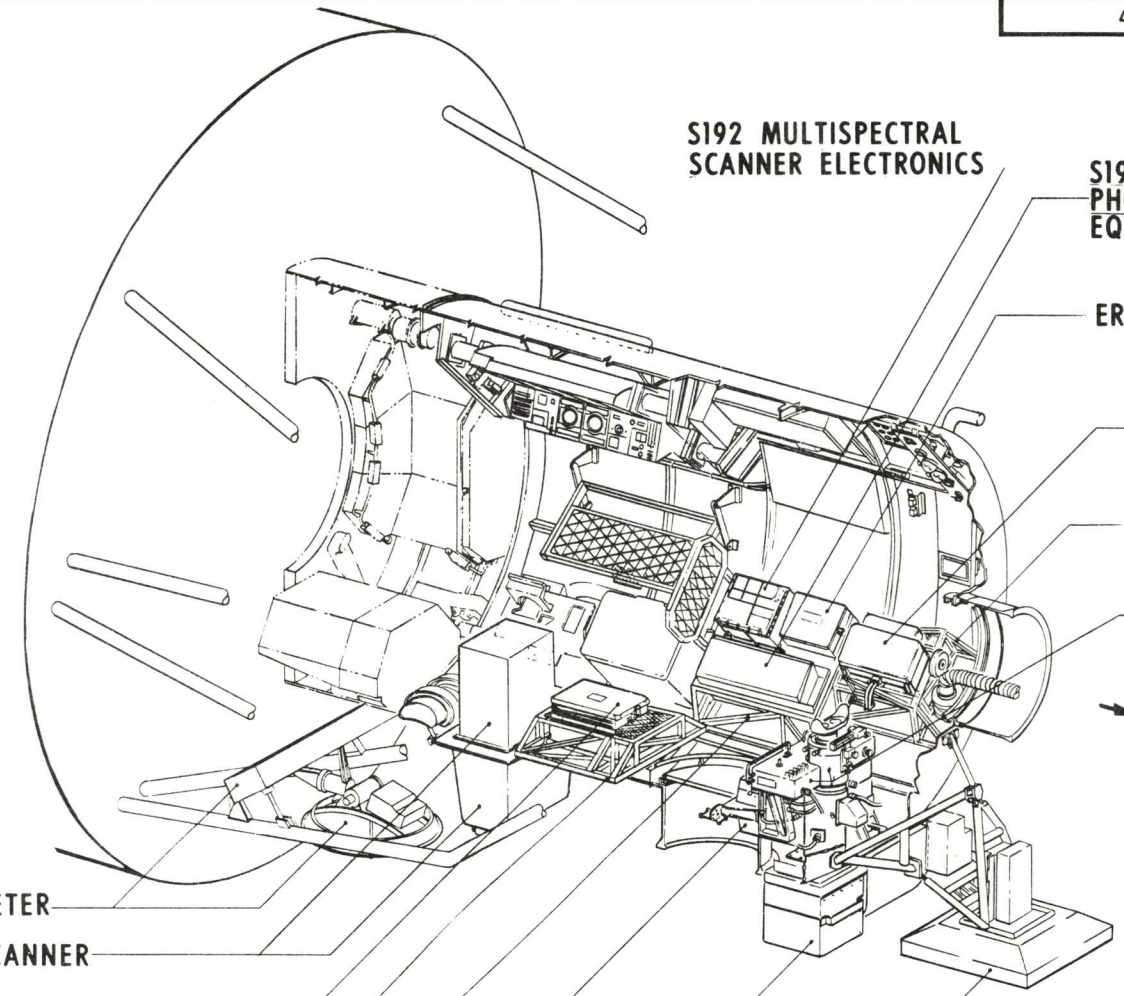

S191 EXTERNAL COMPONENTS

MARTIN MARIETTA
DENVER DIVISION

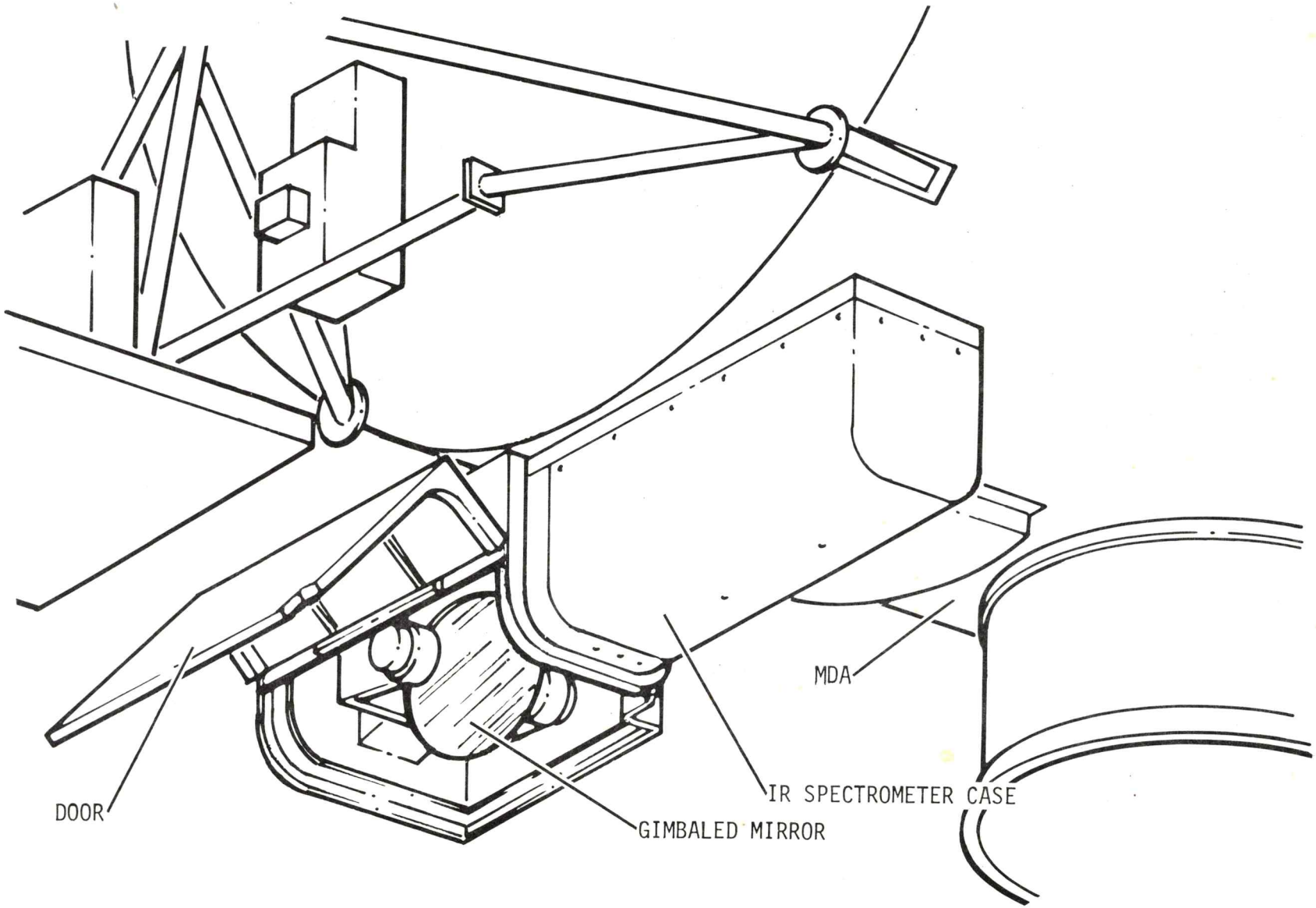

FOR TRAINING PURPOSES ONLY

MARTIN MARIETTA

DENVER DIVISION

VTS INFRARED SPECTROMETER CASE ASS'Y

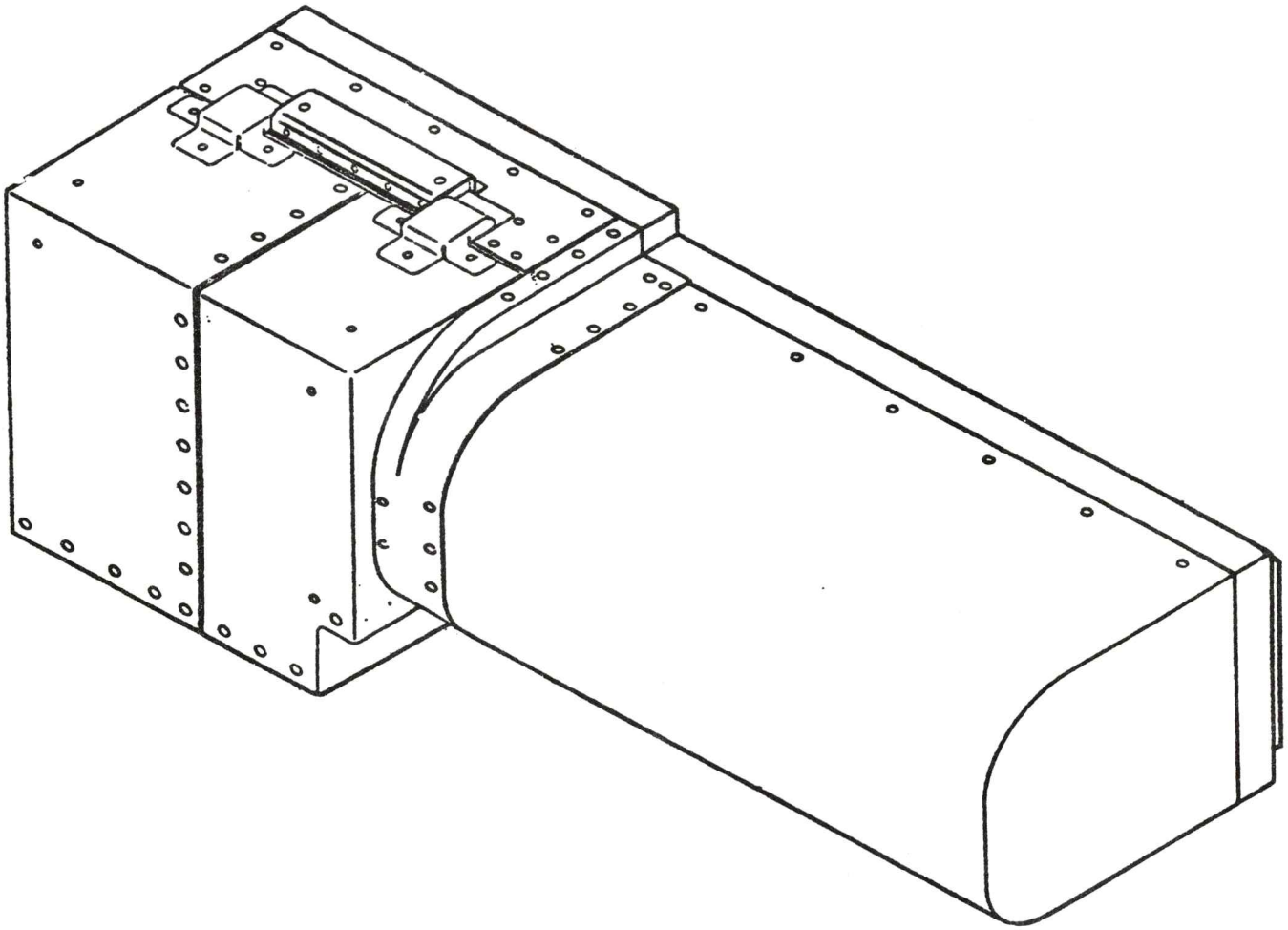

S191 SYSTEMS INTERFACES

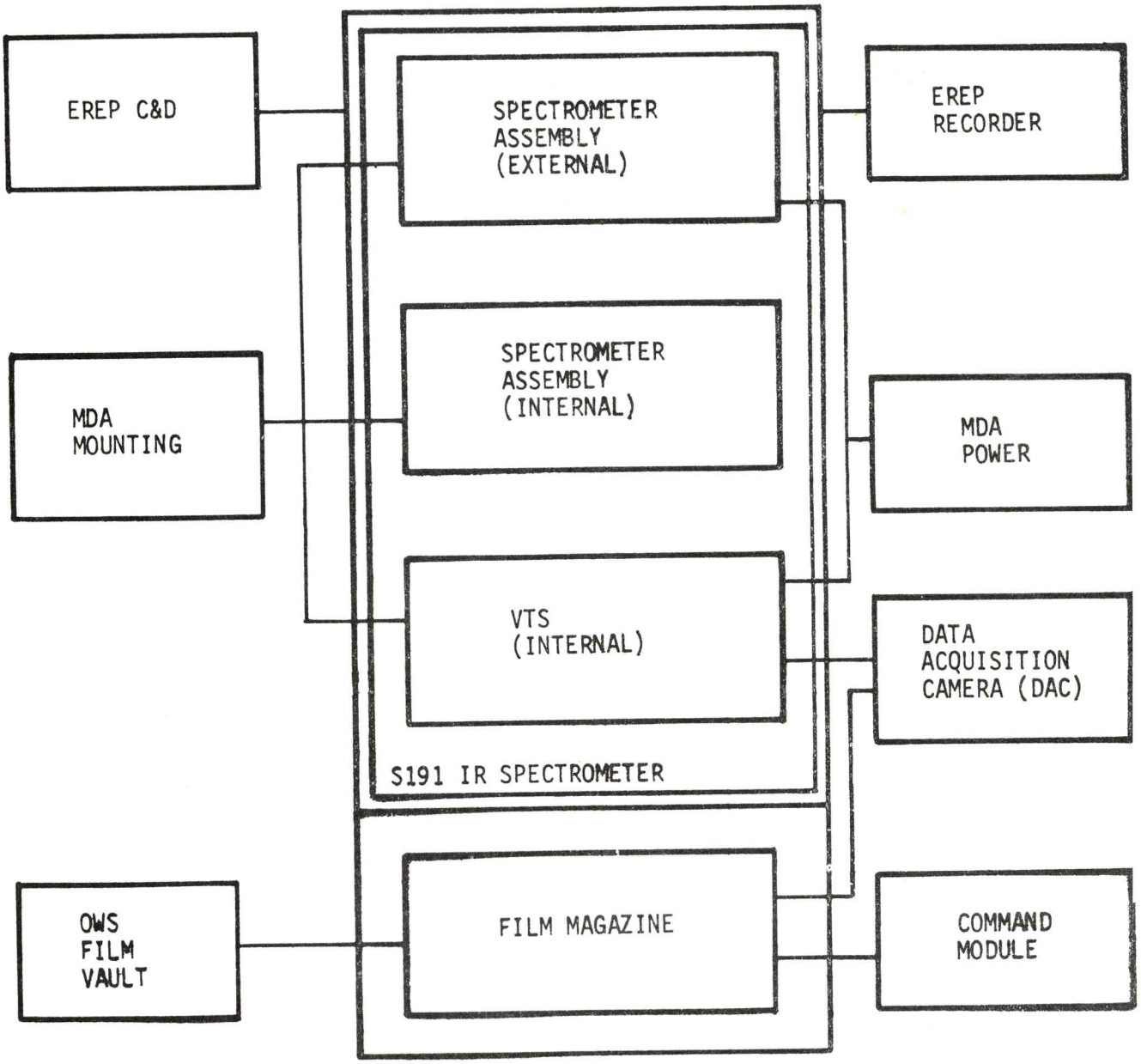

VIEWFINDER TRACKING SYSTEM

MARTIN MARIETTA
DENVER DIVISION

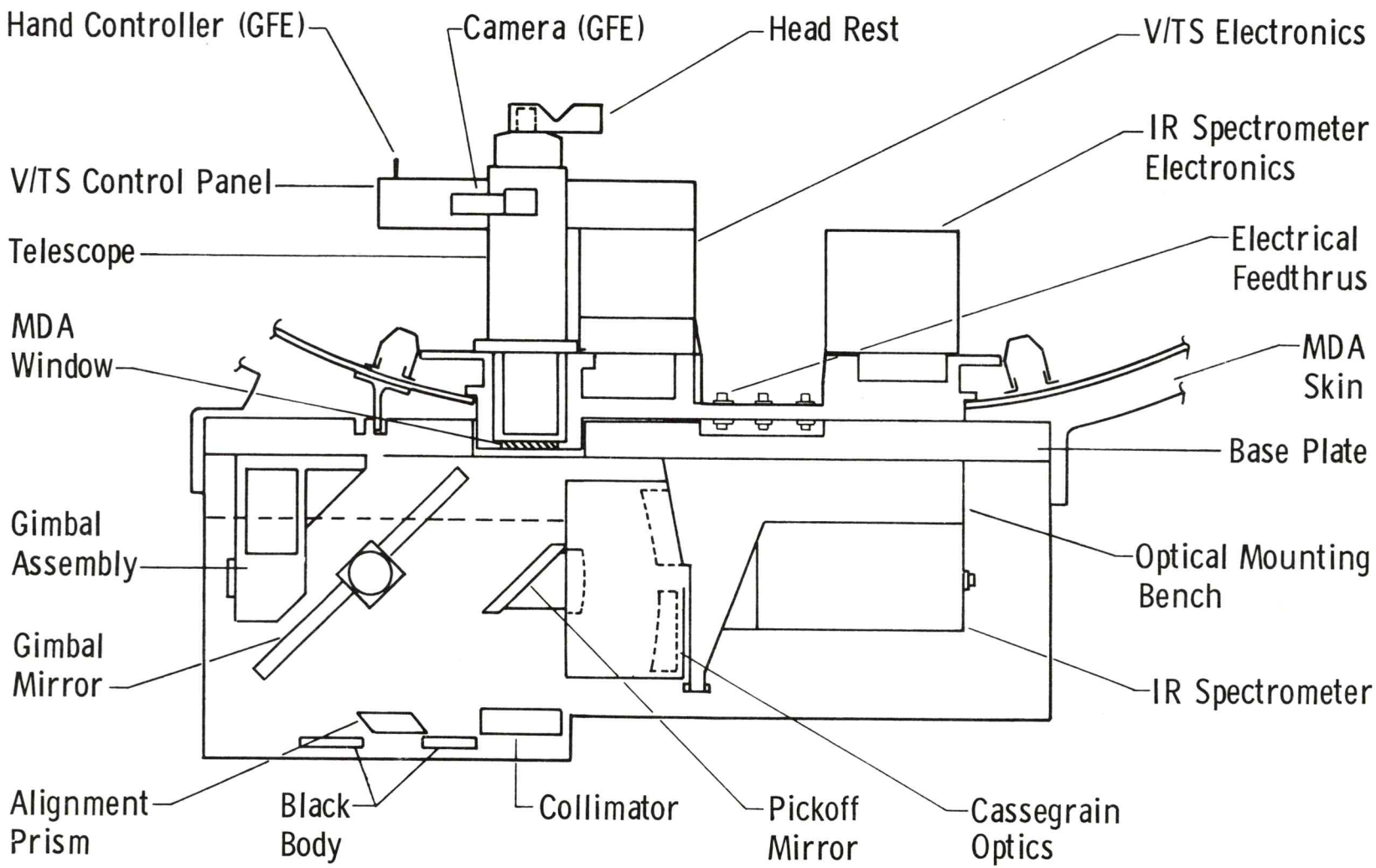

IR SPECTROMETER CASE ASSEMBLY WITH HOUSING REMOVED

MARTIN MARIETTA
DENVER DIVISION

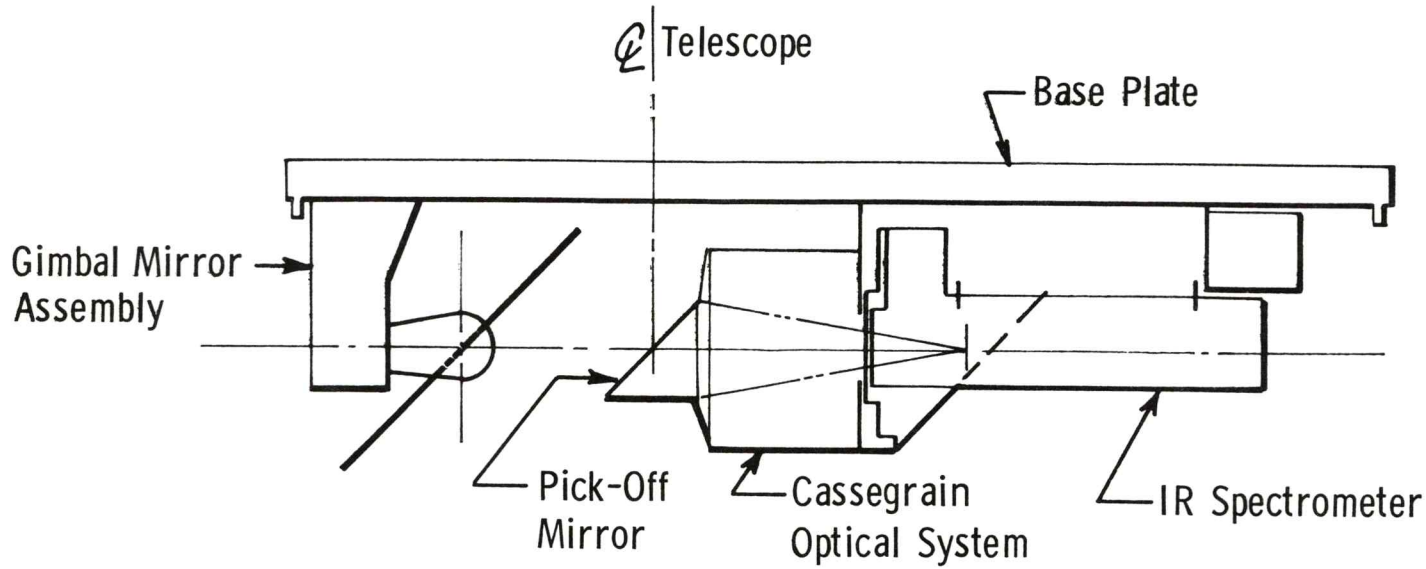

S191 SYSTEM DIAGRAM

MARTIN MARIETTA
DENVER DIVISION

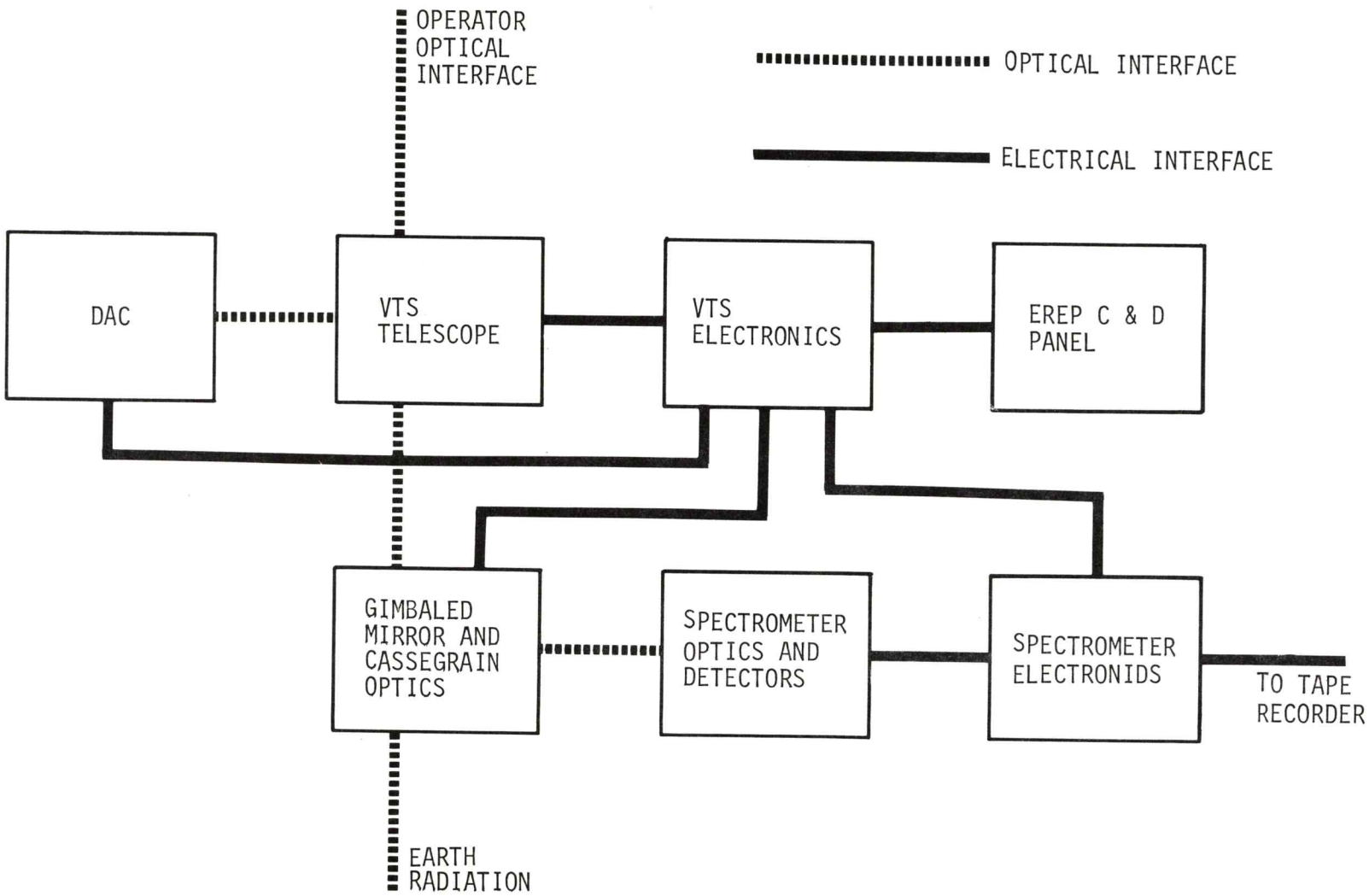

VTS TELESCOPE & CONTROL PANEL ELECTRONICS

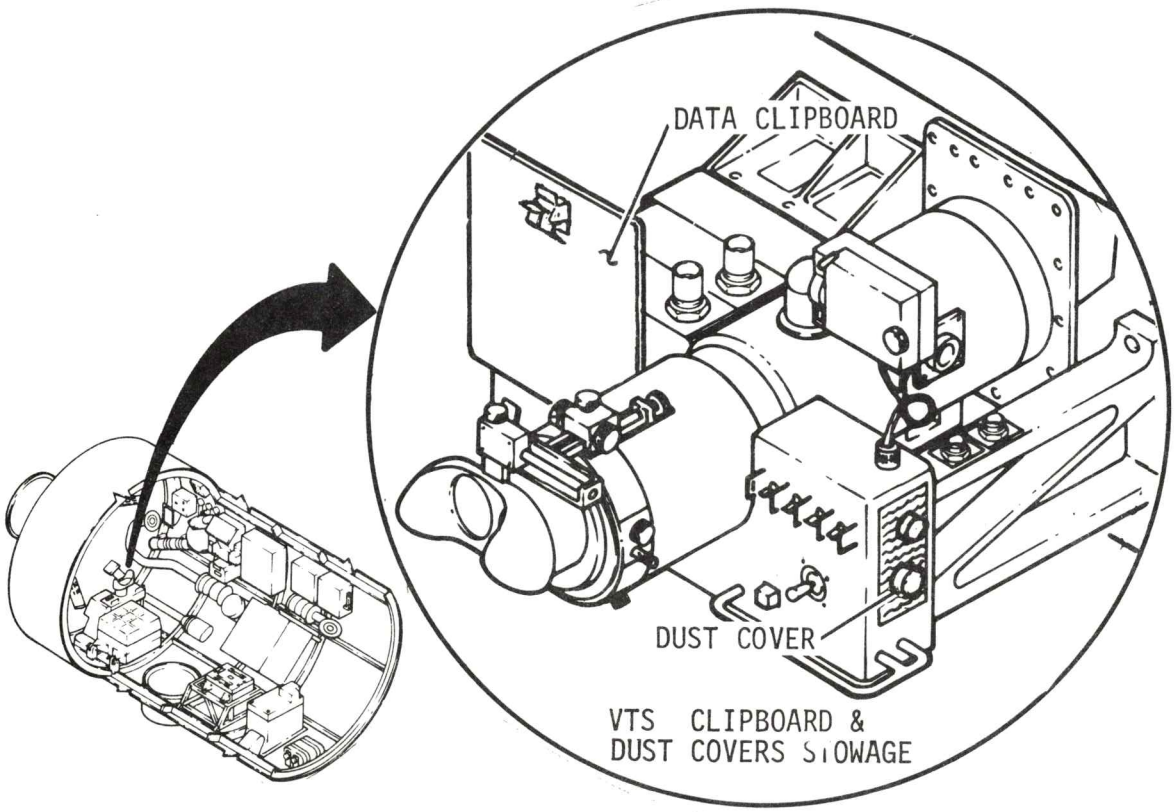

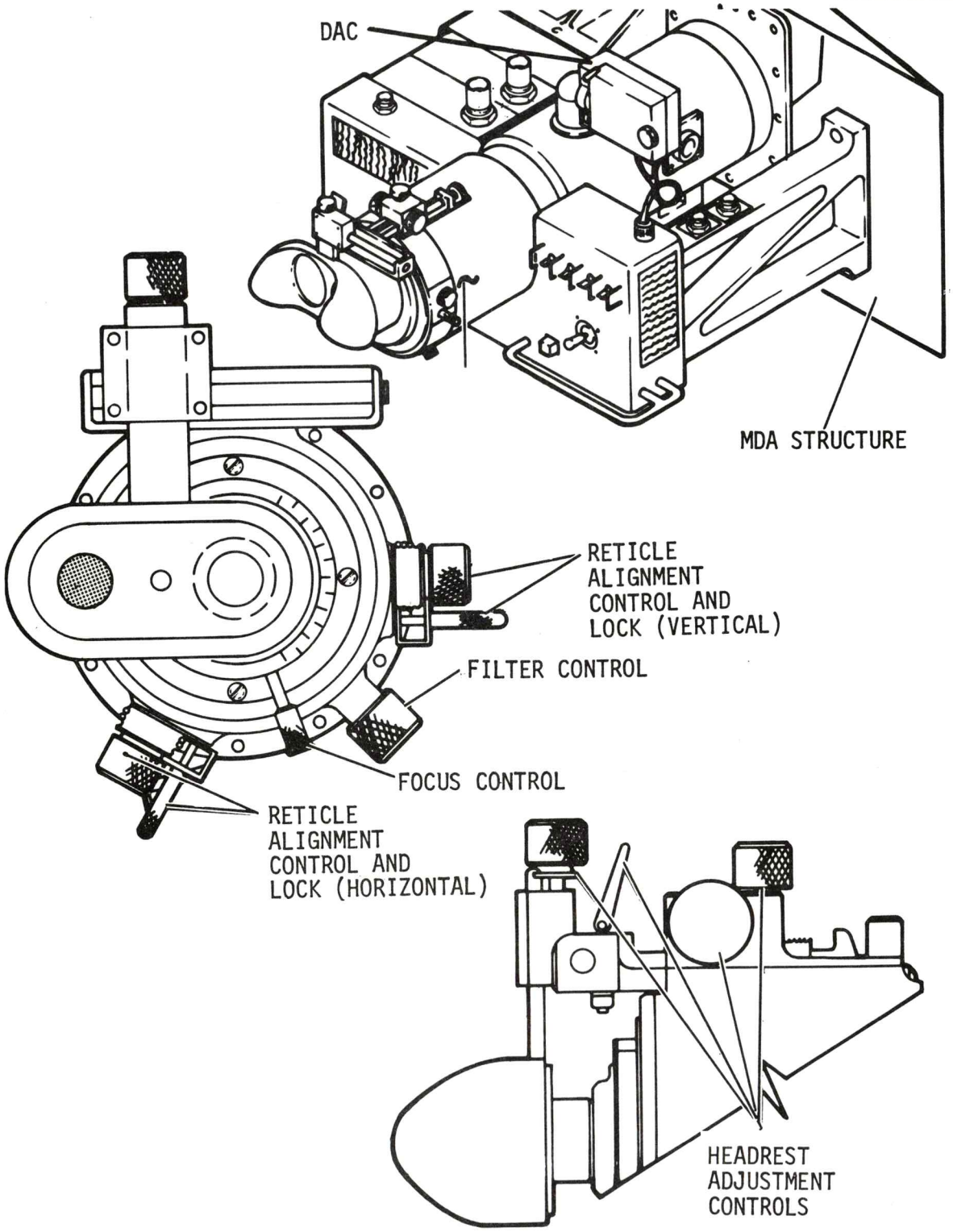

S191 Viewfinder Tracking System (Internal)

VIEWFINDER TRACKING SYSTEM TELESCOPE OPTICS

MARTIN MARIETTA
DENVER DIVISION

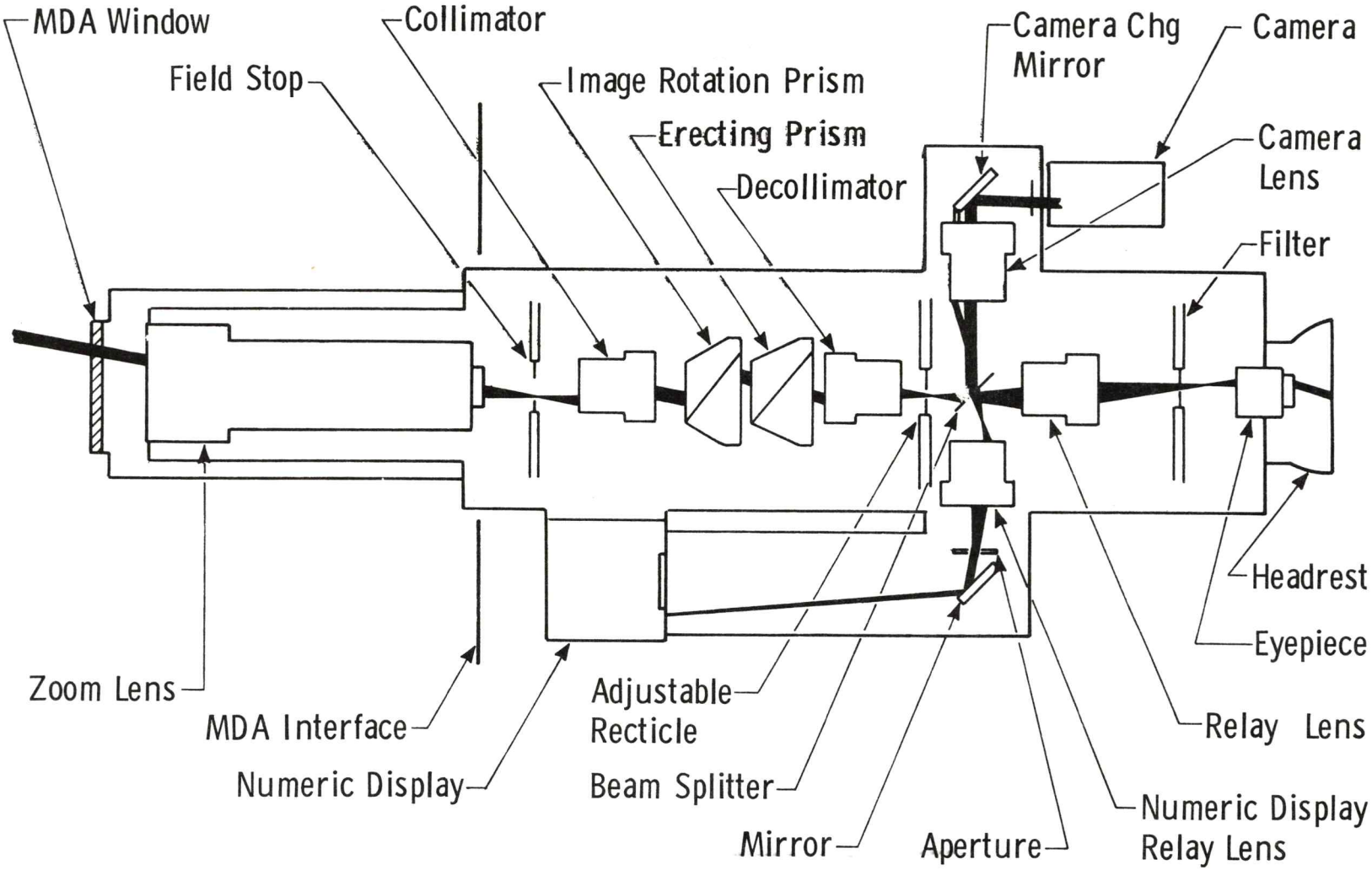

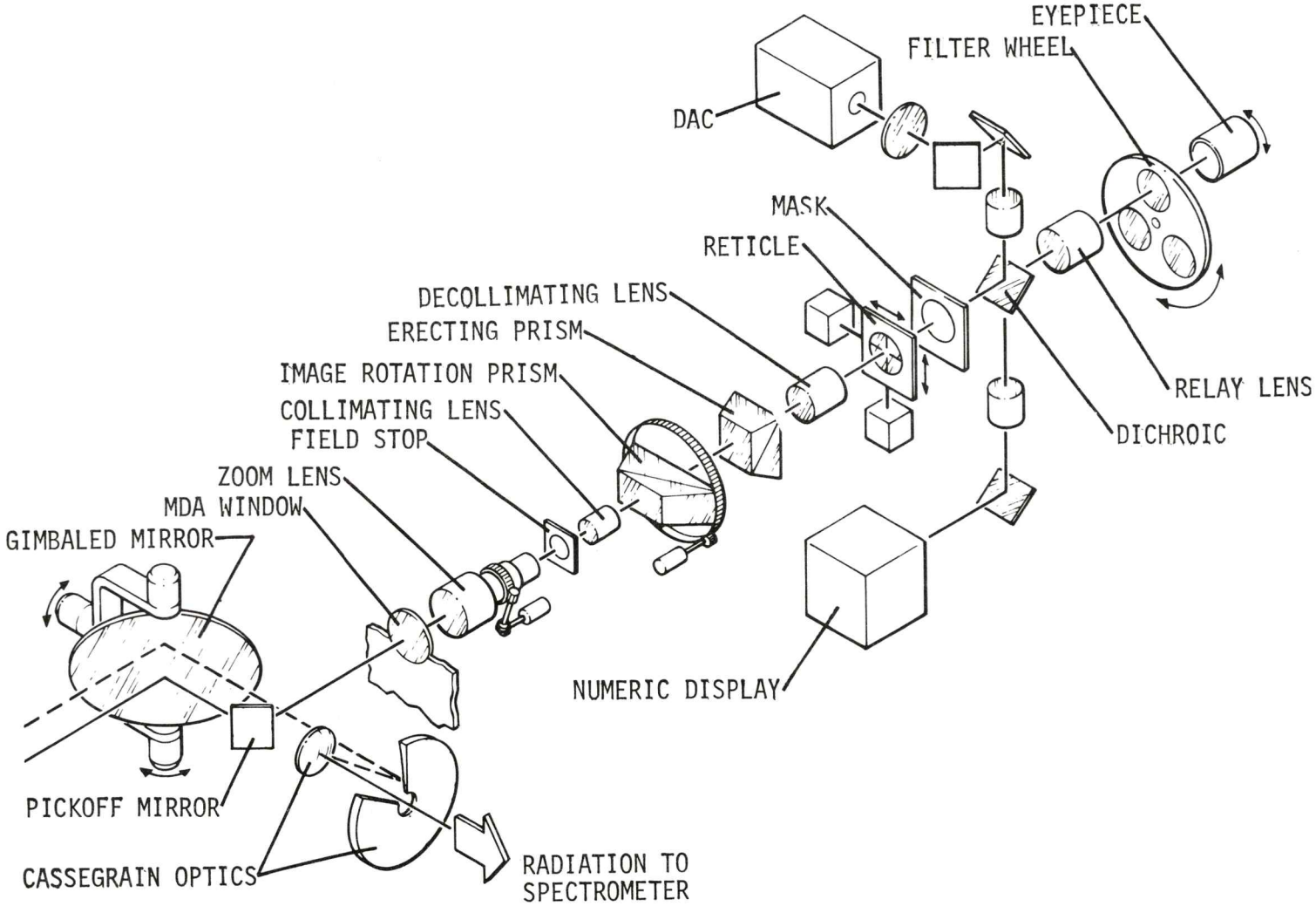

S191 VTS Optical Diagram

VTS TELESCOPE FIELD OF VIEW DISPLAYS

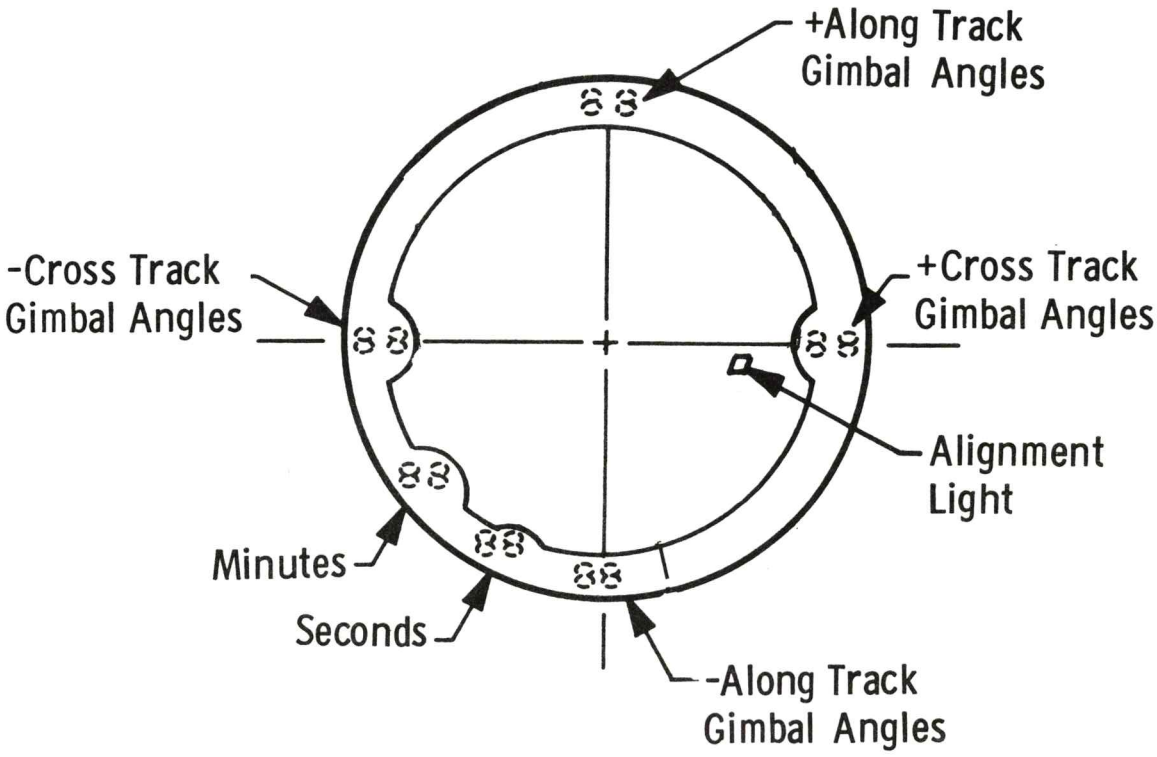

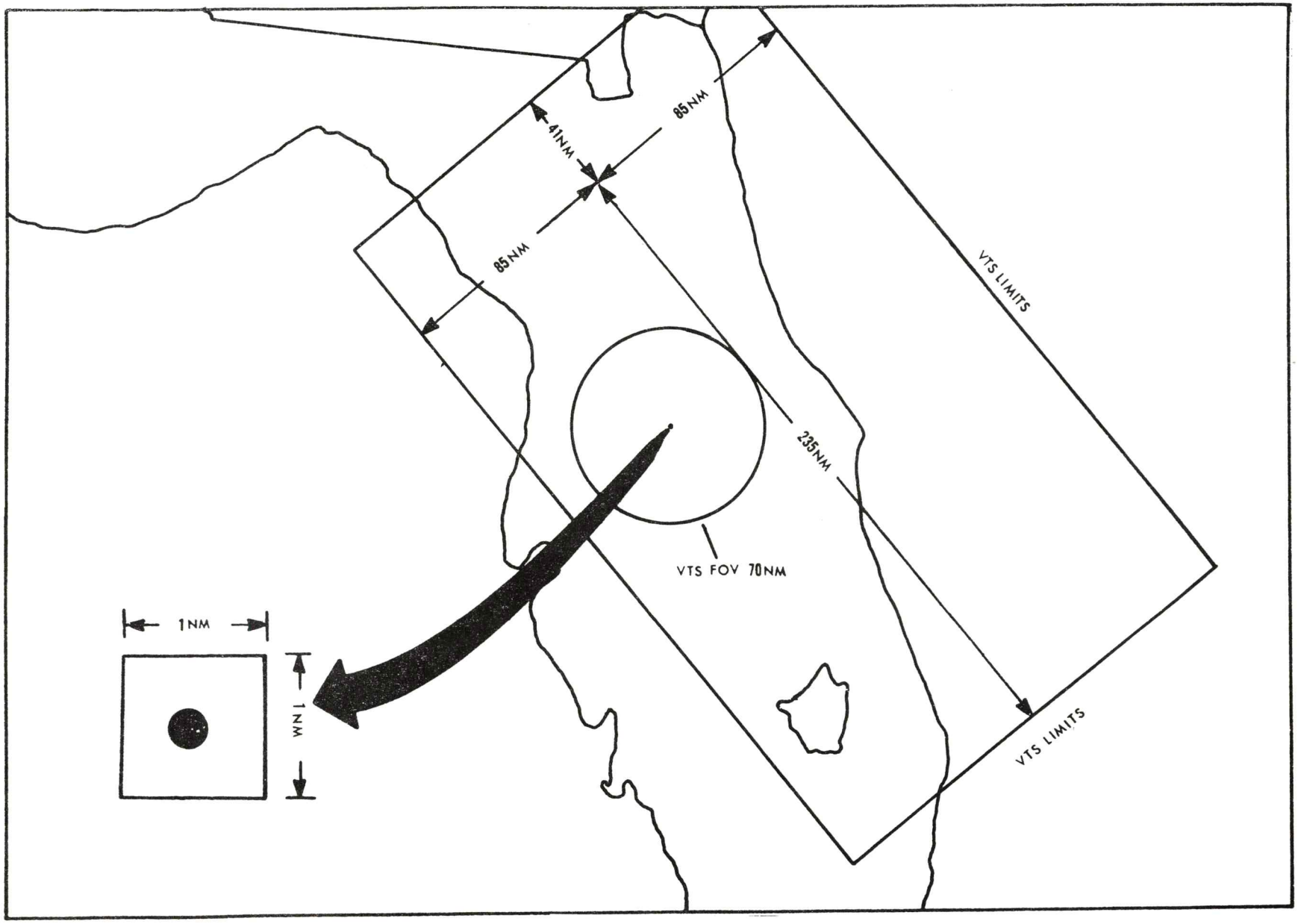
41NM
85NM
85NM
235NM
VTS LIMITS
VTS LIMITS
VTS FOV 70NM
1NM
1NM

V/TS BLOCK DIAGRAM - ELECTRICAL

FOR TRAINING PURPOSES ONLY
MARTIN MARIETTA
DENVER DIVISION

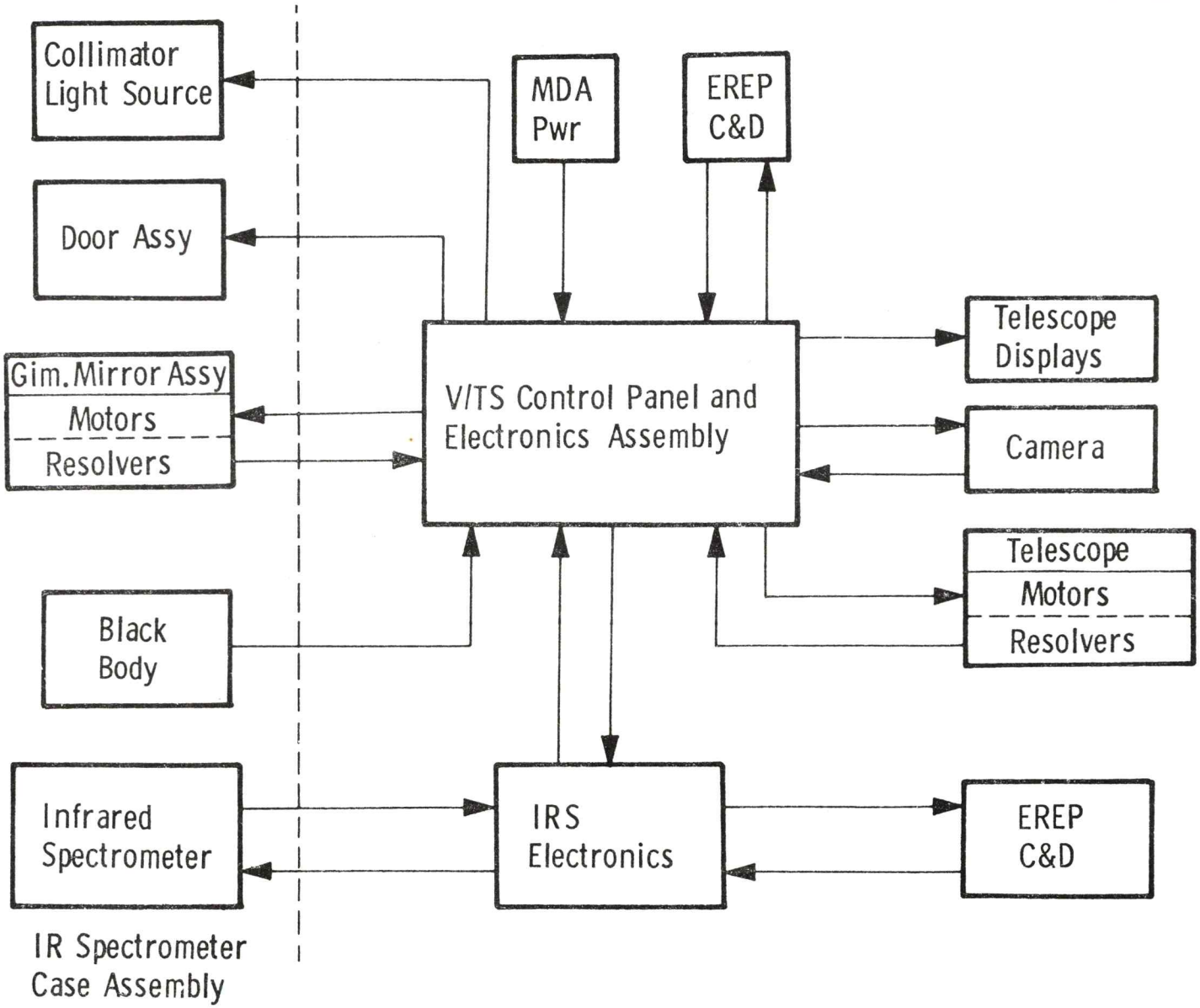

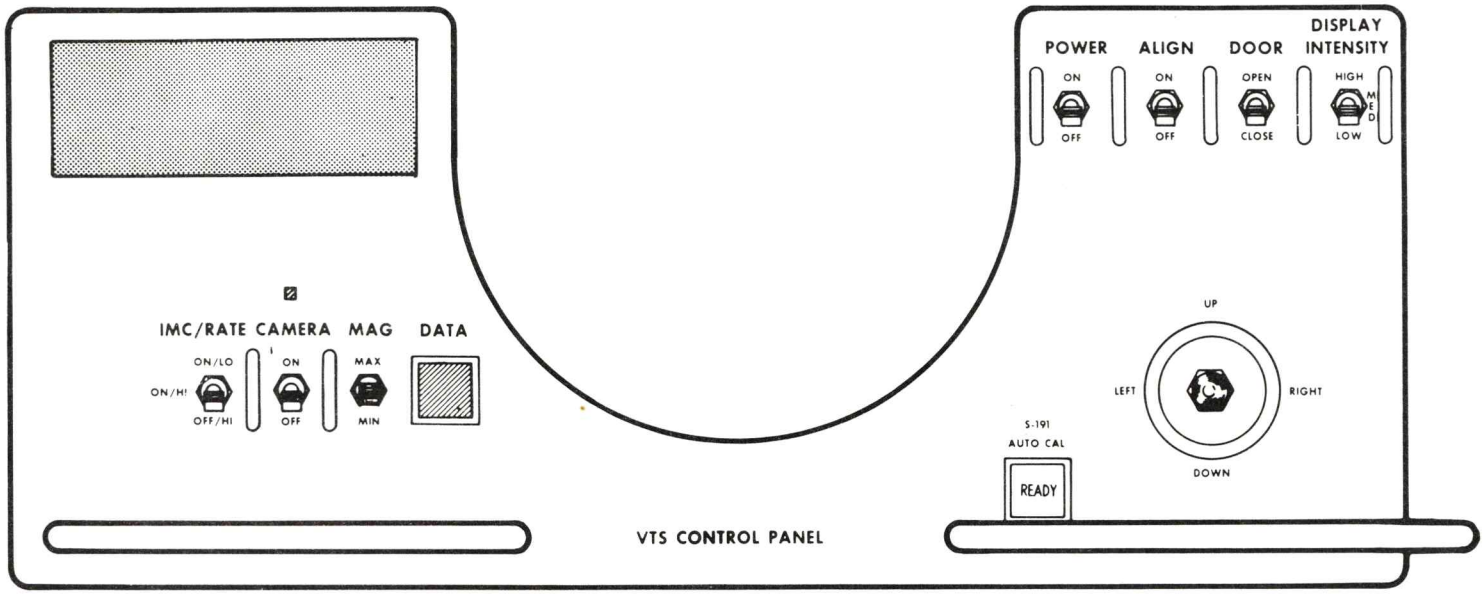

S191 VTS Control Panel(109)

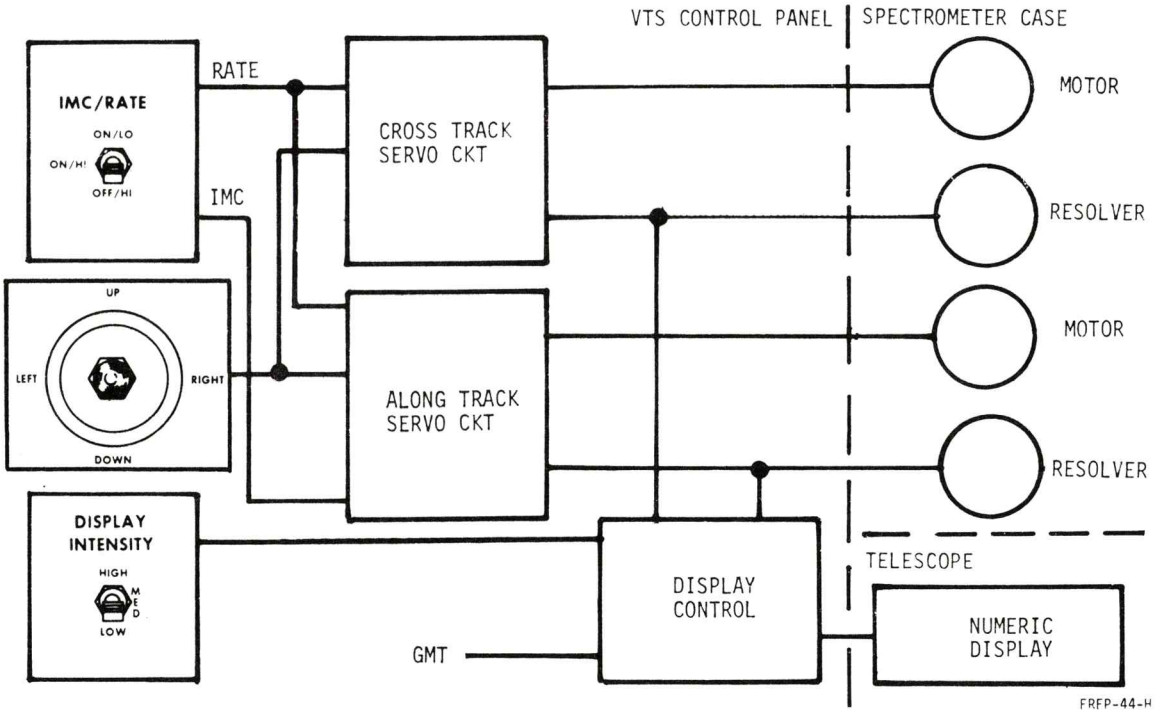

S191 Gimbaled Mirror Control

GIMBALED MIRROR SLEW RATES

FOR TRAINING PURPOSES ONLY

MARTIN MARIETTA

DENVER DIVISION

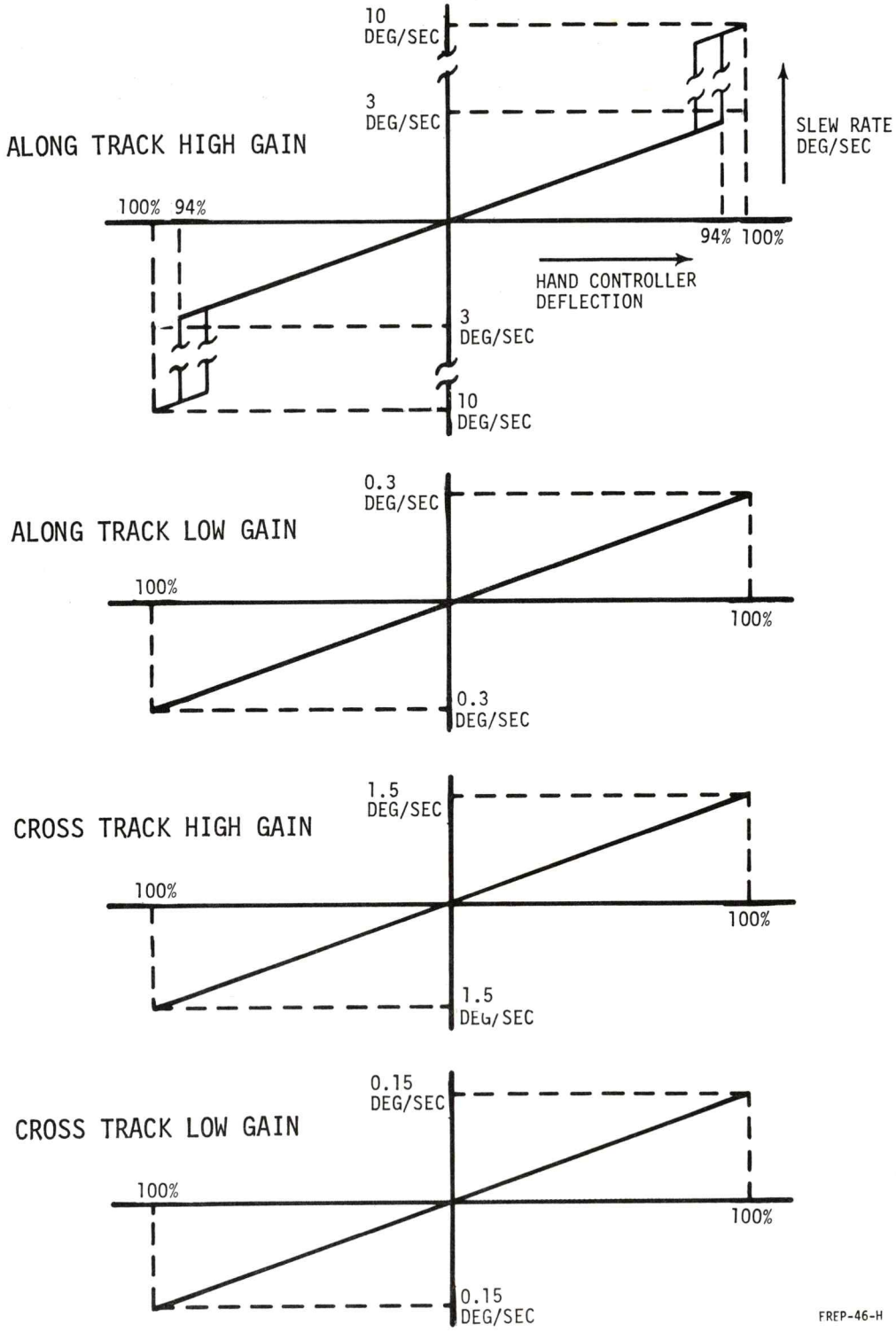

FREP-46-H

DOOR CONTROL

MARTIN MARIETTA
DENVER DIVISION

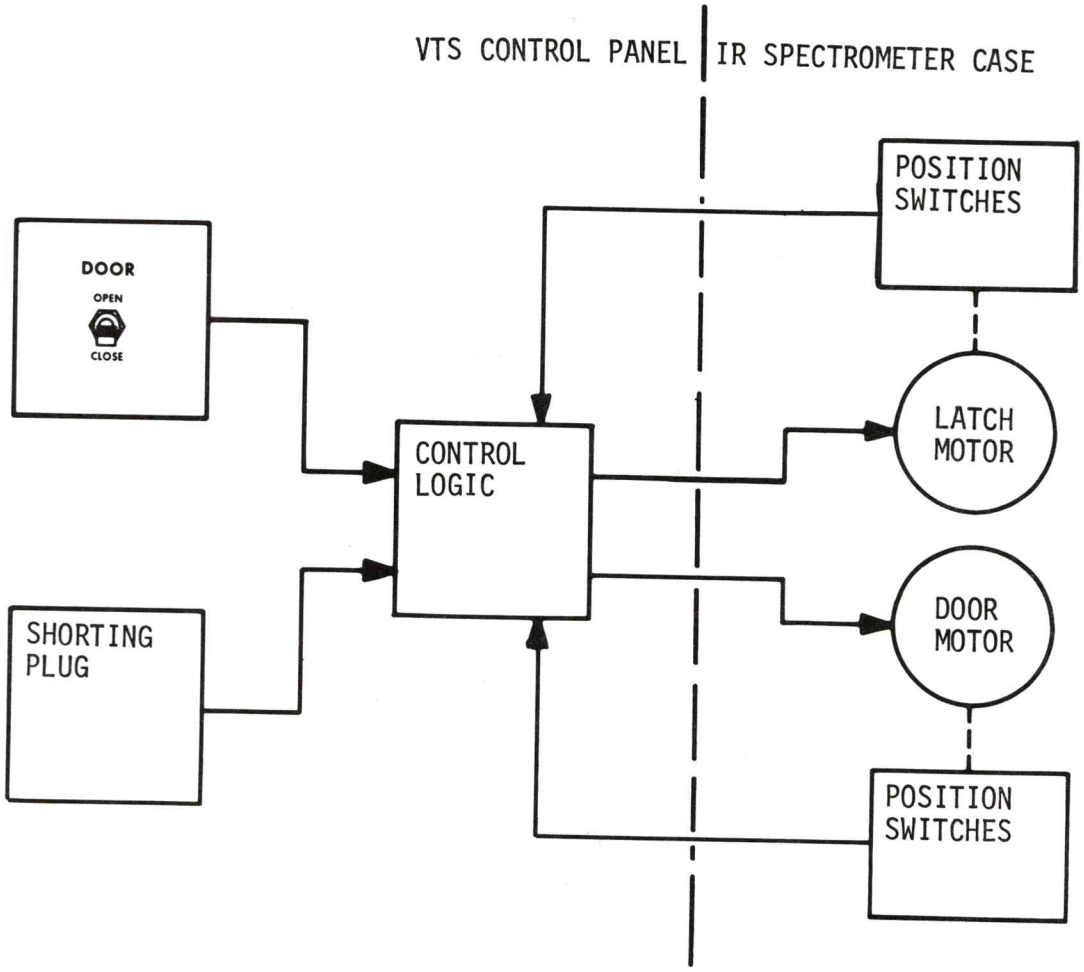

MAGNIFICATION AND CAMERA CONTROL

MARTIN MARIETTA
DENVER DIVISION

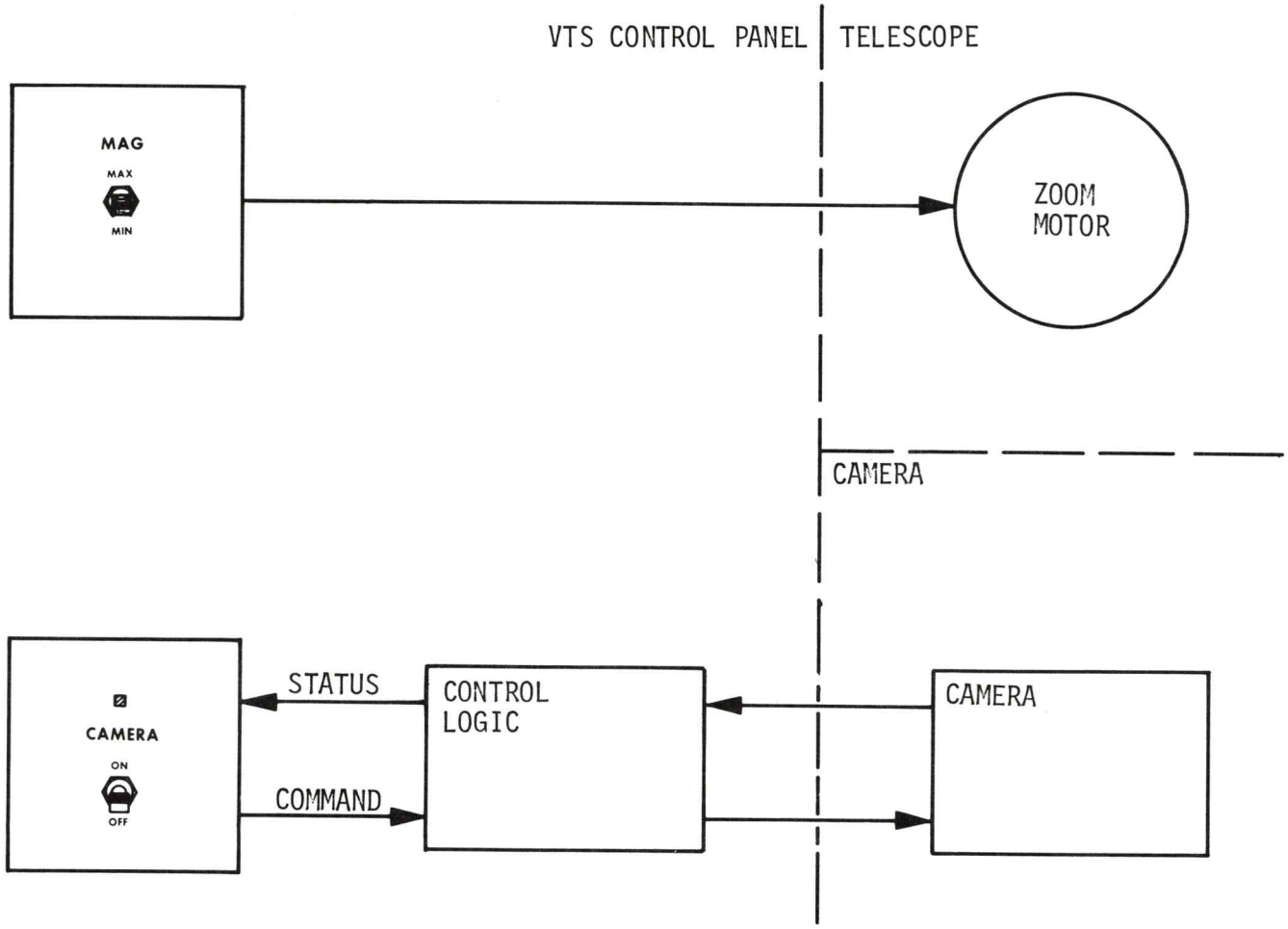

DATA SYSTEM

MARTIN MARIETTA
DENVER DIVISION

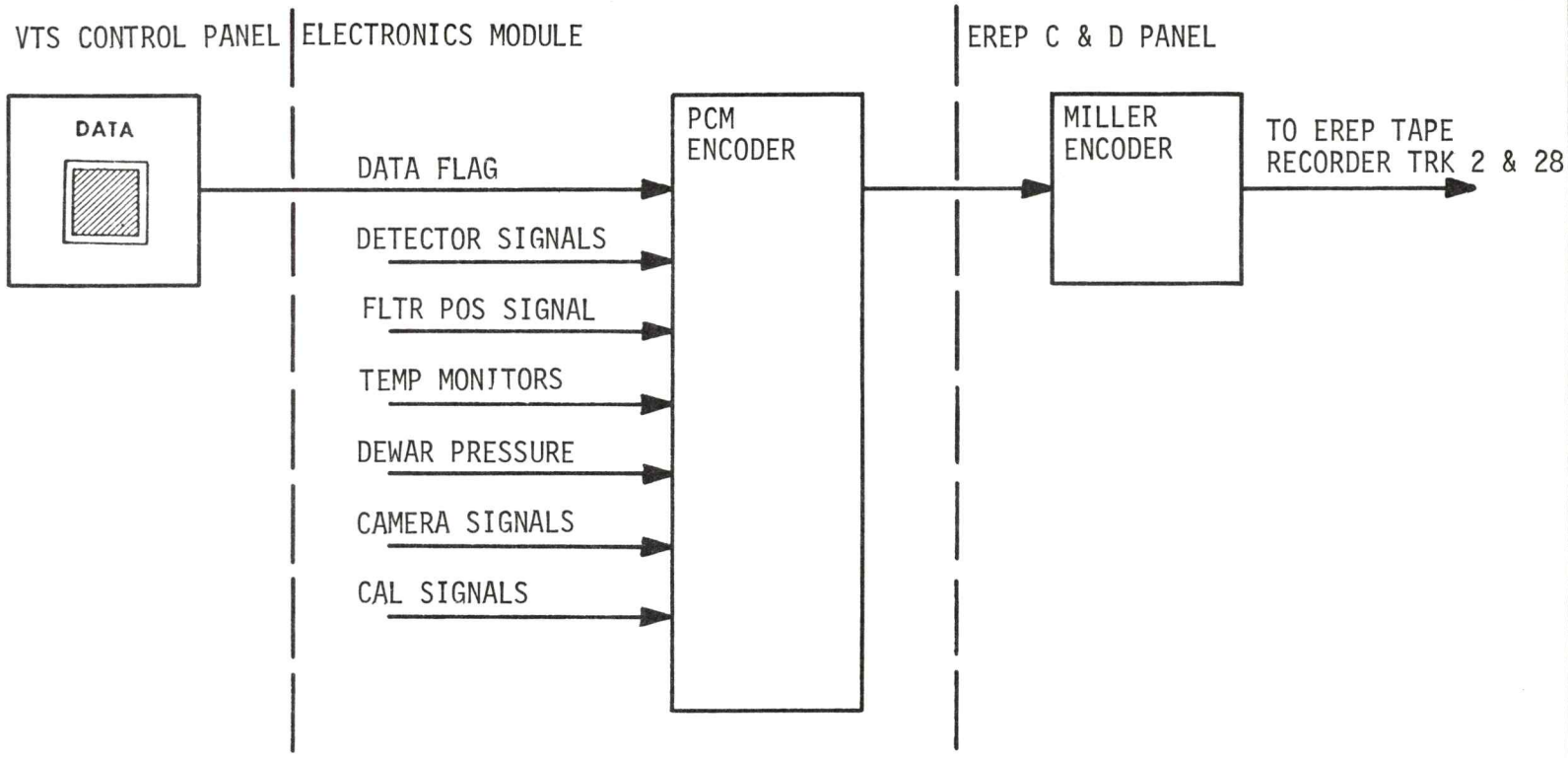

DEN 066232-02(2-69)

ALIGNMENT CONTROL

MARTIN MARIETTA
DENVER DIVISION

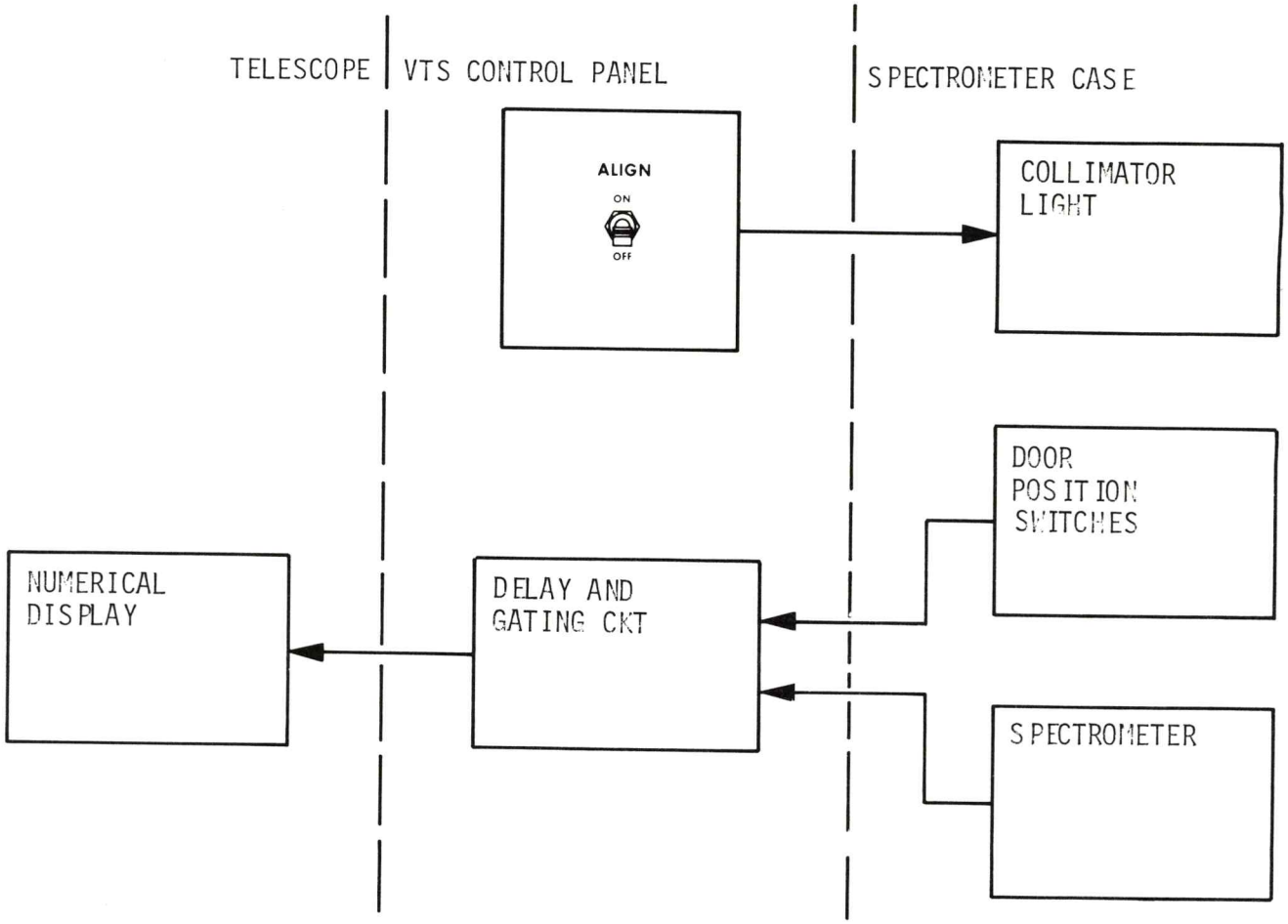

CALIBRATION

MARTIN MARIETTA
DENVER DIVISION

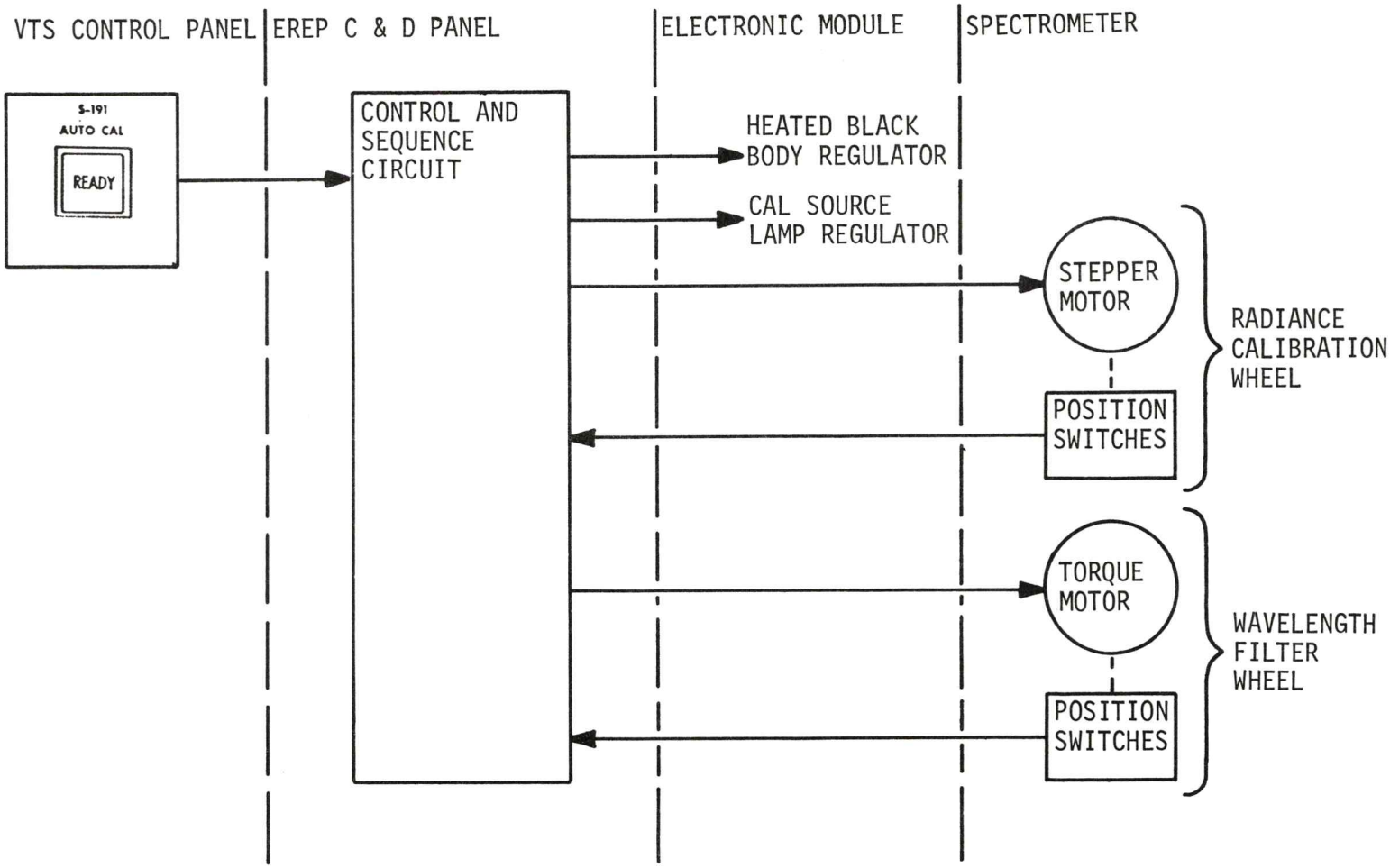

DEN 066232-02(2-69)

CALIBRATION SEQUENCE

MARTIN MARIETTA
DENVER DIVISION

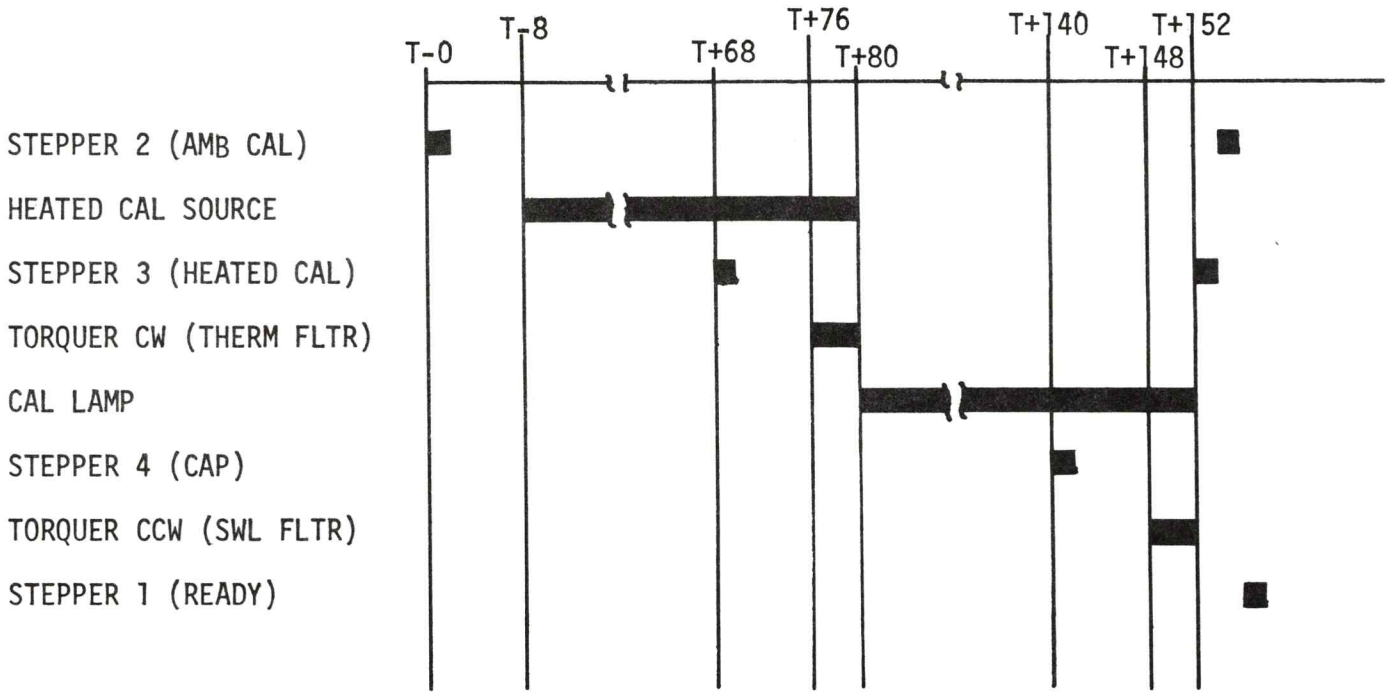

S191 INITIAL OPTICS

MARTIN MARIETTA
DENVER DIVISION

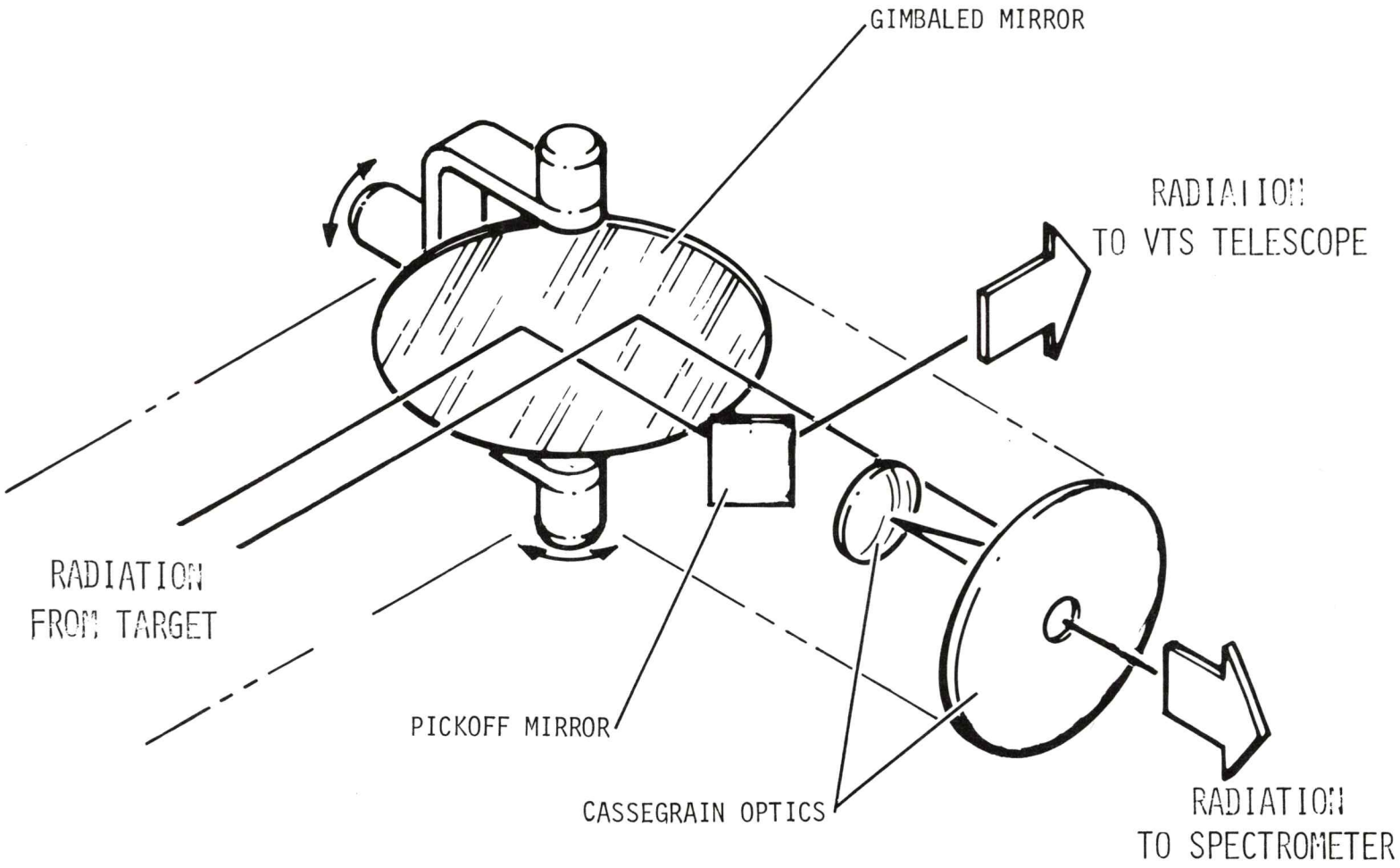

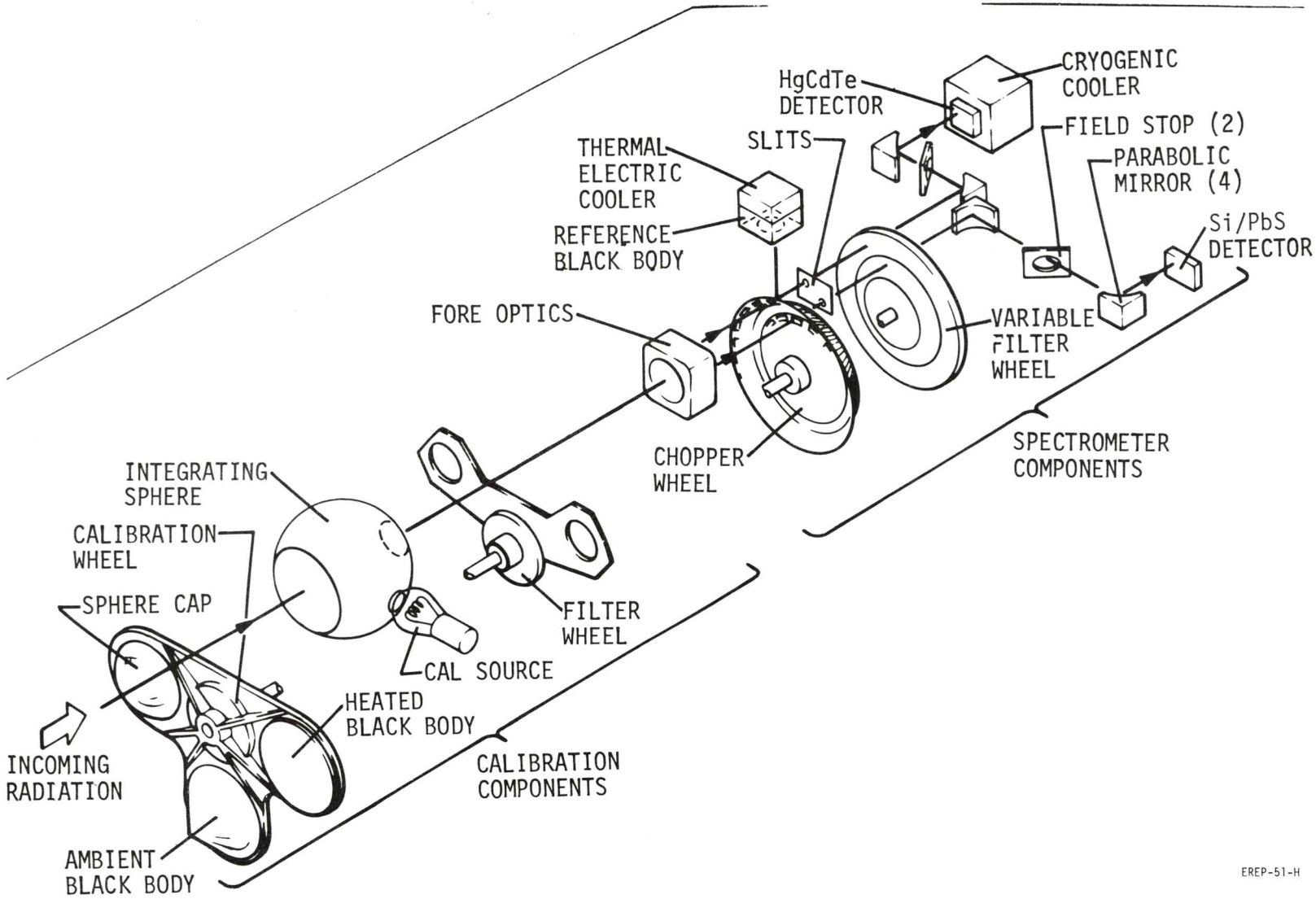

EREP-51-H

S191 Spectrometer Optical Diagram

SPECTROMETER ELECTRONICS

MARTIN MARIETTA
DENVER DIVISION

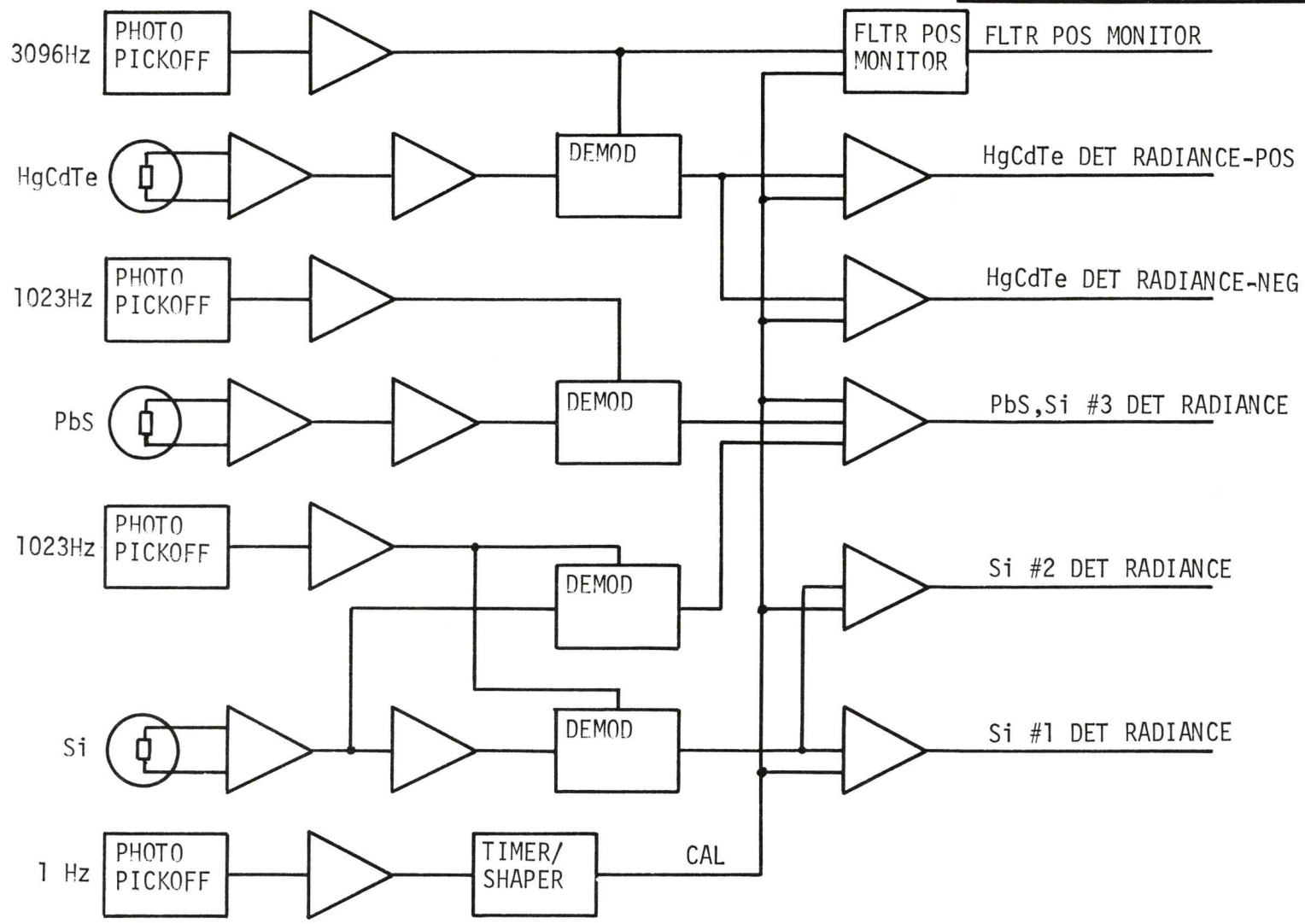

S191-18

DEN 066232-02(2-69)

VTS ALIGNMENT SEQUENCE

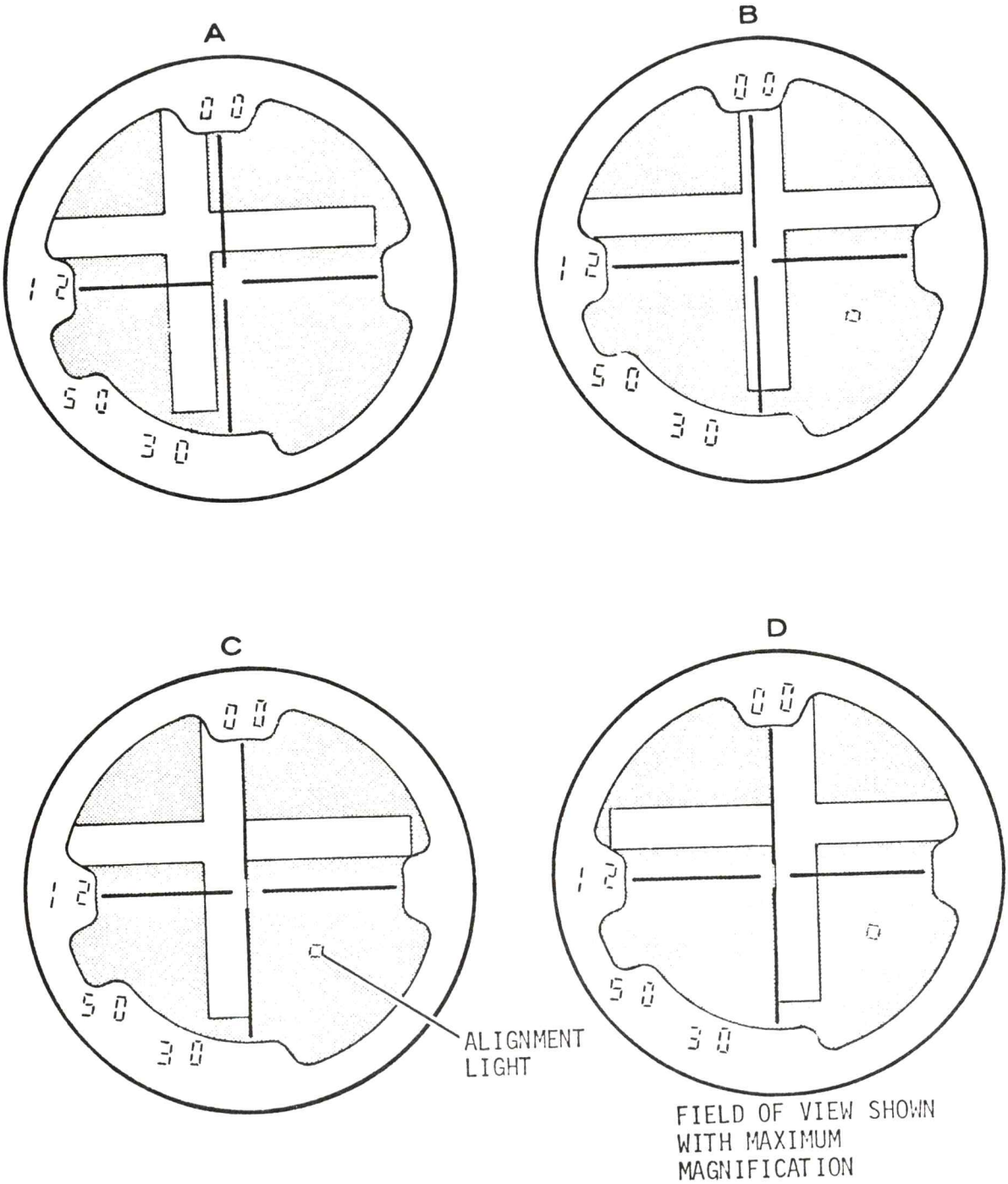

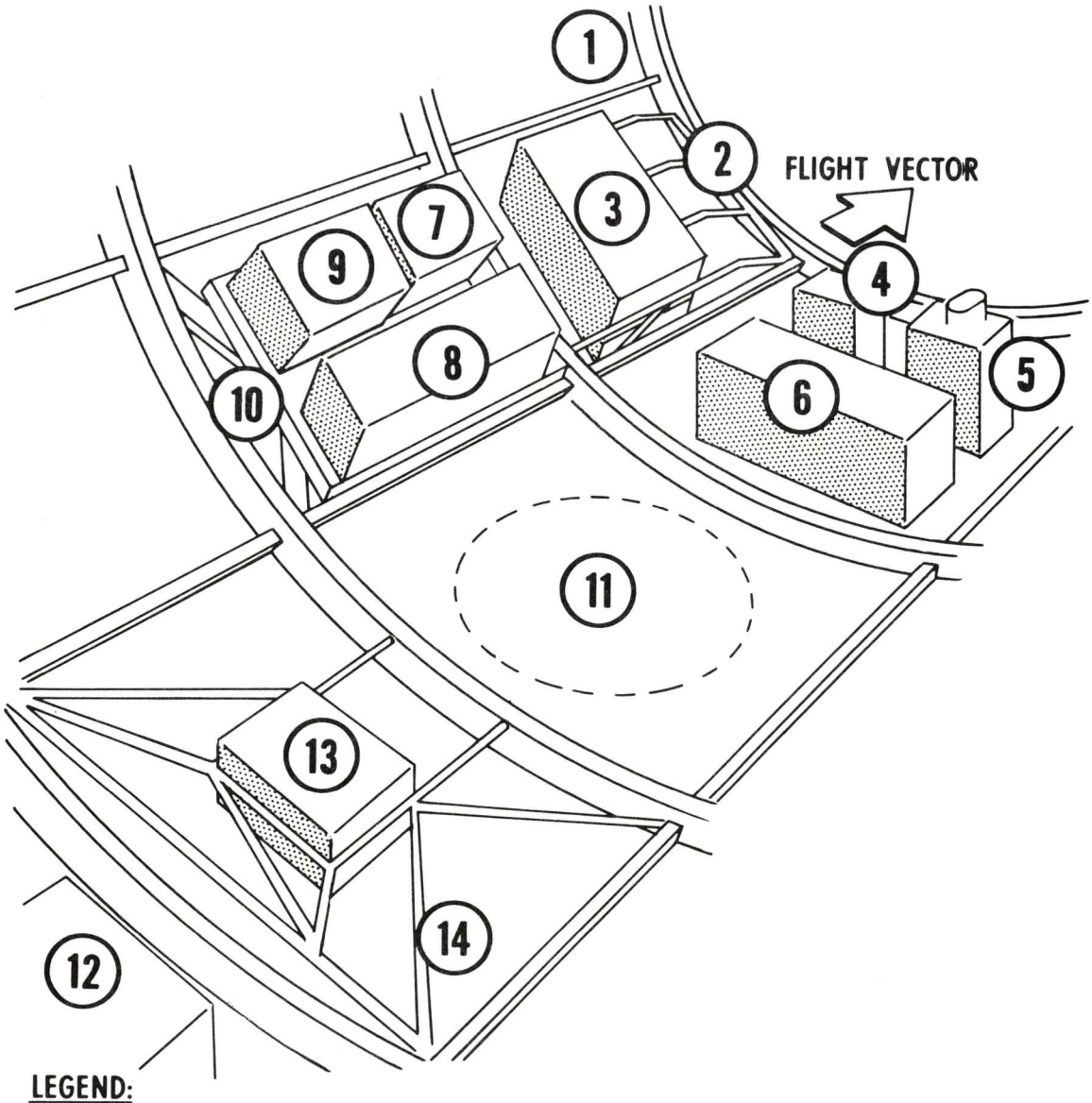

LEGEND:

1 FWD FRAME—BARREL—MDA
2 ESE RACK NO 1
3 C&D PANEL
4 IR SPECTROMETER ELEC
5 VIEWFINDER/TRACKING SYSTEM
6 S190
7 TAPE RECORDER
8 S190 STOWAGE, TAPE STOWAGE
9 S192 ELECTRONICS ASSEMBLY
10 ESE RACK NO 2
11 DOCKING PORT
12 10-BAND MULTISPECTRAL SCANNER (INTERNAL)
13 BACKUP TAPE RECORDER
14 BACKUP TAPE RECORDER SUPPORT

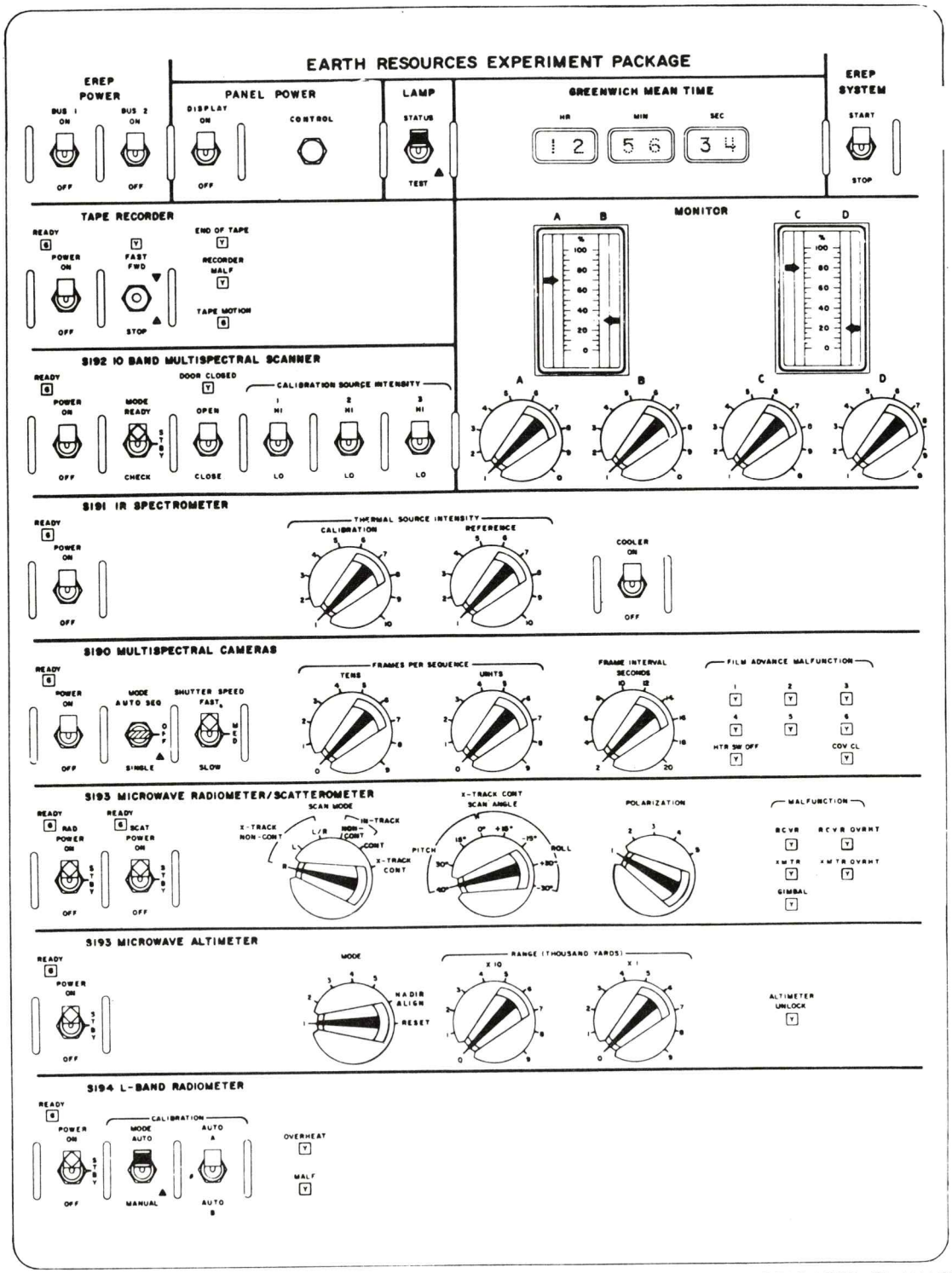

RELEASED 71 JAN 27

EREP Control and Display Panel

POWER DISTRIBUTION AND READY INDICATION

MARTIN MARIETTA
DENVER DIVISION

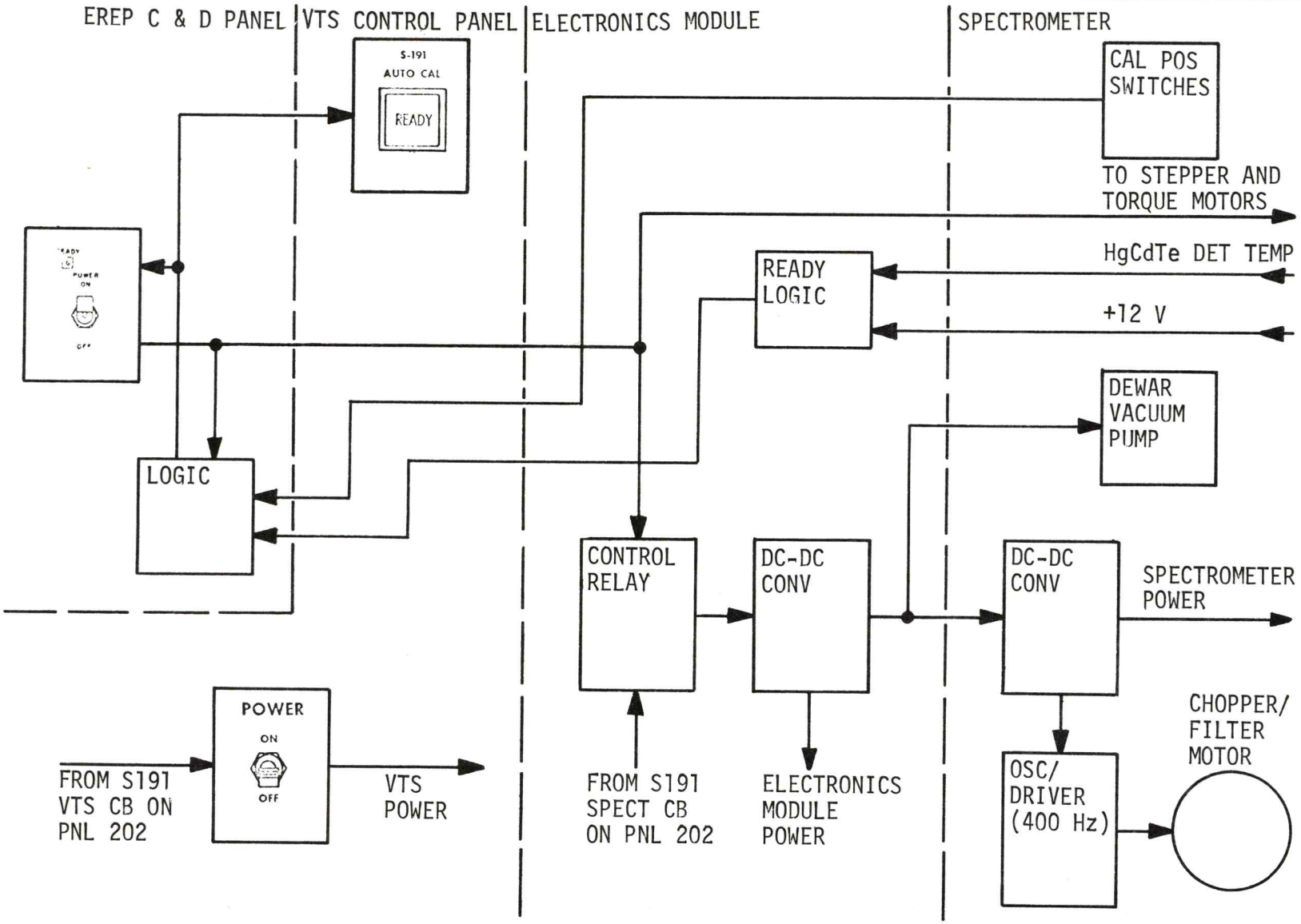

DEN 066232-02(2-69)

TEMPERATURE CONTROLS

MARTIN MARIETTA
DENVER DIVISION

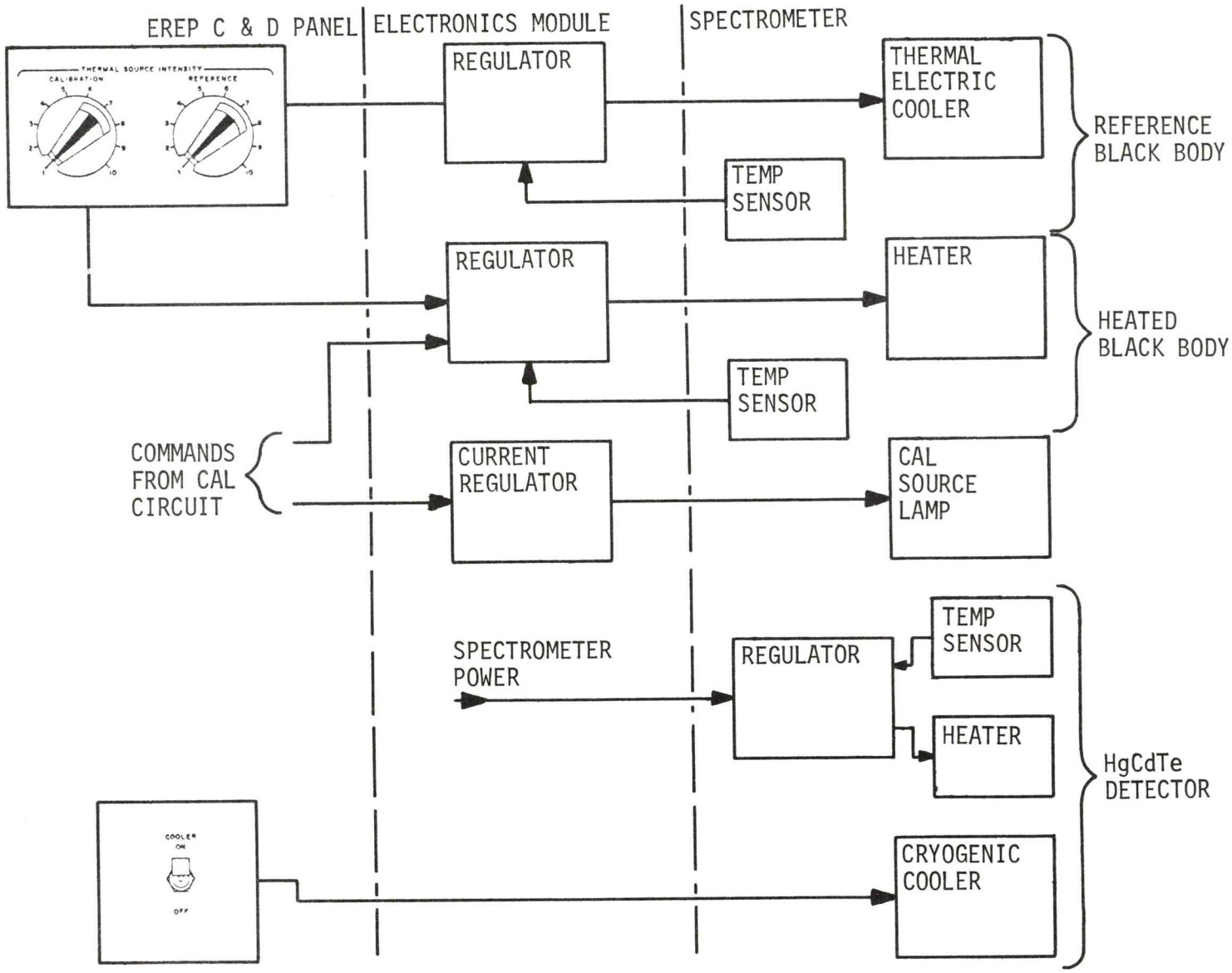

DEN 066232-02(2-69)

EREP POWER FUNCTIONAL SCHEMATIC
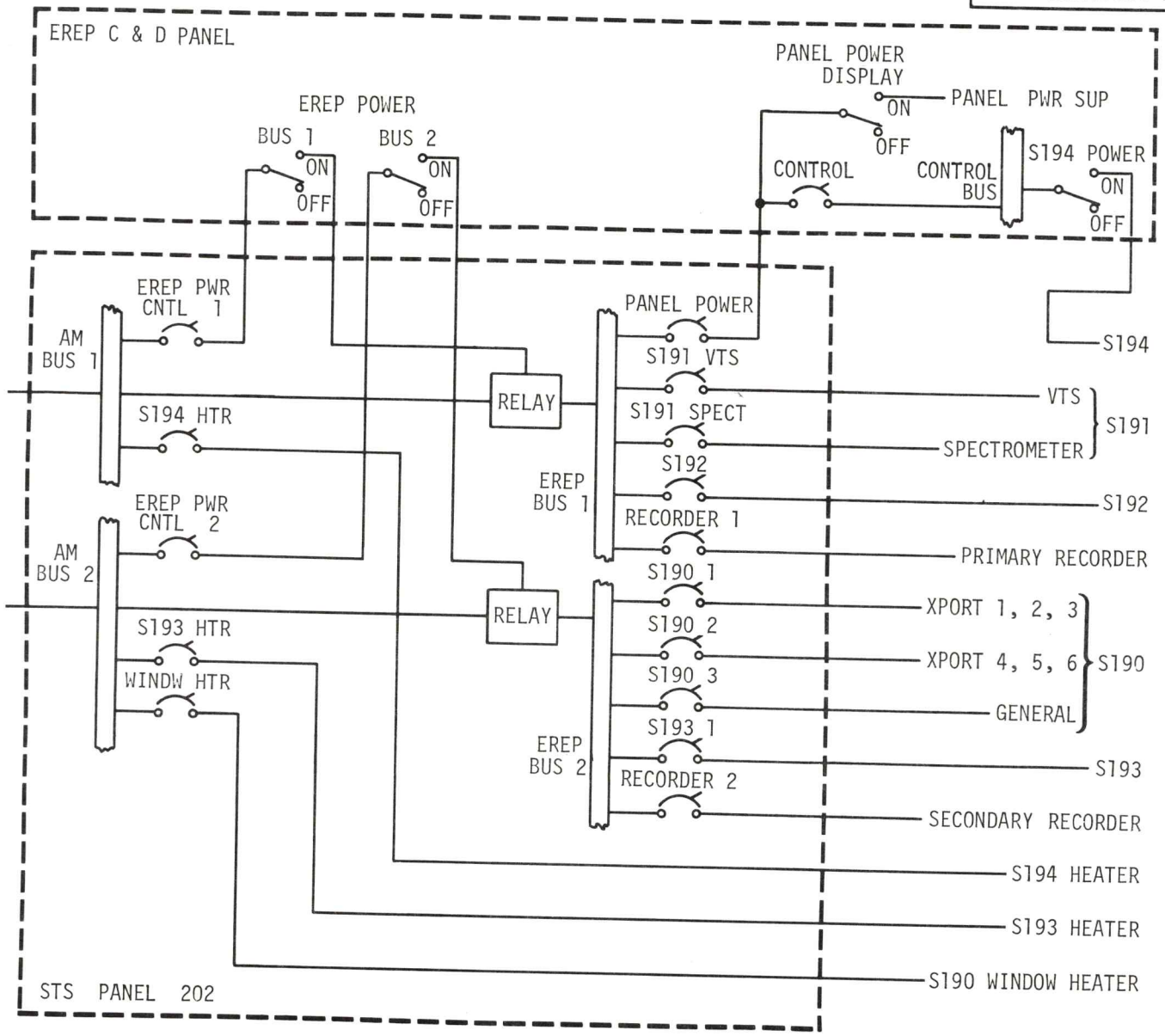
MARTIN MARIETTA
DENVER DIVISION