REVISIONS					
SYM	ZONE	DESCRIPTION	CHG NO	DATE	APPD
A		REVISED PER TDRR 17351		2 MAR 65	GM
B		REVISED PER TDRR 19403		21 JUNE 65	
C		REVISED PER TDRR 19429		3 JUNE 65	

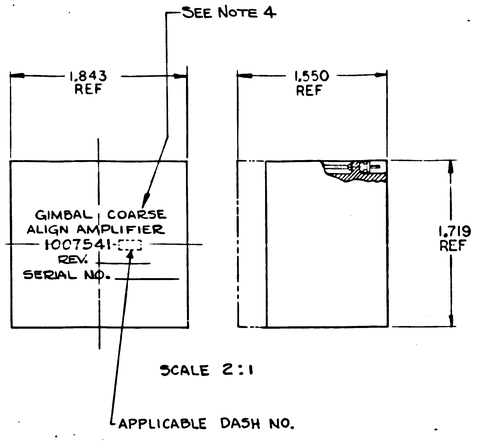

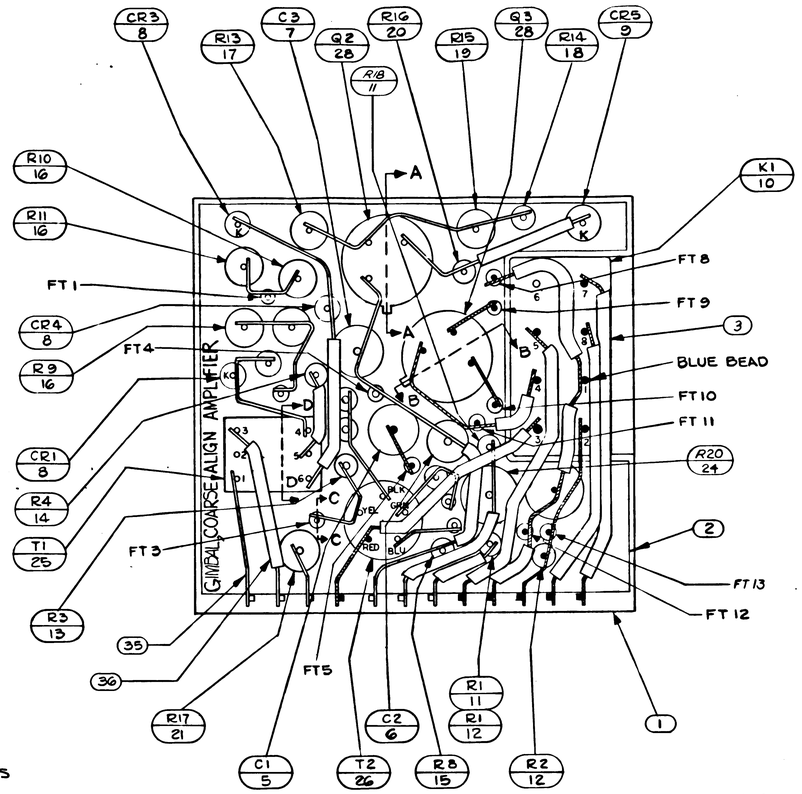

TABLE I

CONFIGURATION	BOND BETWEEN WAFER AND HEATSINK	TOP OF WAFER	HEATSINK-FOAM CONTACT SURFACE ADJACENT TO HEATSINK EXTERNAL SURFACE
WAFER & FLAT HEATSINK	100% OF AREA .12 FROM EXTERNAL HEATSINK SURFACE. 80% OF AREA .25 FROM EXTERNAL HEATSINK SURFACE	100% OF AREA .25 FROM EXTERNAL MODULE SURFACE	N/A
WAFER AND ADJACENT VERTICAL HEATSINK SURFACE	CORNER FILLET AND VERTICAL SURFACE TO WITHIN .03 ± .03 OF EXTERNAL SURFACE	100% OF AREA .25 FROM EXTERNAL MODULE SURFACE	N/A
HEATSINK FOAM CONTACT SURFACE PERIMETER	N/A	N/A	.25 MIN WIDTH OR TOTAL AVAILABLE ON 90% OF PERIMETER TO WITHIN .03 ± .03 OF EXTERNAL EDGE

1. INTERPRET DRAWING IN ACCORDANCE WITH STANDARDS PRESCRIBED BY MIL-D-70327.
2. UNLESS OTHERWISE SPECIFIED: WIRING SHALL MEET THE REQUIREMENTS OF ND 1002069.
3. ENCAPSULATE MODULE PER ND 1002002 (BLACK POLYURETHANE FOAM) UNLESS OTHERWISE SPECIFIED PERIPHERAL ENCAPSULANT DIMENSIONS MAY EXCEED THE NOMINAL HEATSINK WIDTH AND LENGTH DIMENSIONS BY A MAXIMUM OF .005. WHEN THE HEATSINK OUTLINE EXCEEDS THE ENCAPSULANT OUTLINE, THE MAXIMUM DIMENSION BETWEEN ANY HEATSINK SURFACE AND ITS RESPECTIVE ENCAPSULANT SURFACE SHALL NOT EXCEED .015. REMOVE ALL FLASHING
4. MARK PIN NUMBERS $^{.100}_{.060}$ HIGH (WHITE) AND ALL OTHER CHARACTERS $^{.140}_{.100}$ HIGH (WHITE) PER ND 1002019 AND SERIALIZE PER ND 1002023. CENTRALIZE AS SHOWN.
5. AREA TO BE FREE OF ENCAPSULATING COMPOUND
6. USE AS REQUIRED
7. ON ITEMS (2), (3) AND (4):
   "K" INDICATES CATHODE SIDE OF DIODE
   FT ( ) INDICATES FEED THRU
   "C" INDICATES COLLECTOR LEAD OF TRANSISTOR
   B " " BASE " "
   E " " EMITTER " "
   C(1) " " COLLECTOR " " MULTI-STAGE TRANSISTOR
   B(1) " " BASE " "
   E(1) " " EMITTER " "
8. WHITE DOT AND CLEAR WIRING INDICATES LOWER LEVEL WIRING. BLACK DOT AND CROSS-HATCHED WIRING INDICATES UPPER LEVEL WIRING.
9. TYPICAL SLEEVING FOR CR1 THRU CR4 R1 THRU R8, R14, R16 AND R18
10. MUST MEET REQUIREMENTS OF ND1002136
11. TORQUE TO 4 ± 1 IN-LB FOR ASSY OF ITEM 10
12. ALL CONNECTIONS TO BE MADE BY WELDING PER ND1002005
13. BOND ITEM (40) TO ITEM (31) PER ND1002237.
14. COMPONENTS TO BE CEMENTED IN PLACE PER ND 1002009 METHOD C AND CENTRALIZED
15. USE MIL-I-631 TYPE F, FORM U, GRADE C, CLASS I, CATAGORY I, ONE PLACE ONLY. BOND IN PLACE PER ND1002004, TYPE I
16. PROCURE PER PS 1007041.
17. FILL PER ND 1002117
18. ~~BOND A .25 MIN. WIDE PERIMETER OF THE TOP AND BOTTOM INSULATORS TO THE HEATSINK AND COAT A .25 MIN. WIDE PERIMETER ON THE OUTSIDE SURFACE OF THE INSULATORS PER ND 1002187 TYPE I.~~
19. CLEAN MODULE WHERE POSSIBLE PRIOR TO BONDING OF WAFER BOARDS AND APPLICATION OF COATING MATERIAL BY DEGREASING WITH FREON AND ISO-PROPYL ALCOHOL. ADHESIVE AND COATING MATERIAL PER ND 1002187 TYPE II. APPLY MATERIAL AND COATING AS INDICATED IN TABLE I.

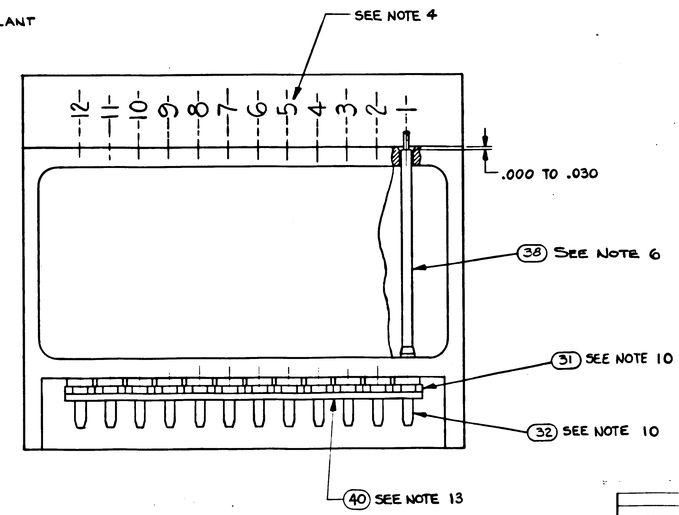

			REF	1010023	SCHEMATIC	
			REF	1009524	SCHEMATIC	
	1	1		40	1008540-12	GASKET, CONNECTOR MINIATURE
	AR	AR		39	MIL-I-631	INSULATION, SLEEVING 22 GA
	AR	AR		38	1006776-20	INSULATION SLEEVING
	AR	AR		37	1006757-8	WIRE, ELEC.
	AR	AR		36	1006776-21	INSULATION SLEEVING
	AR	AR		35	1006757-1	WIRE, ELEC.
	2	2		34	1008070-5	WASHER- FLAT
	2	2		33	MS20341-4A	NUT-HEX
	12	12		32	1006782-5	CONTACT, WRAPOST MALE MINIAT.
	12	12		31	1006775	INSULATOR, WRAPOST MALE MINIAT
	3	3		30	1008025-2	INSULATOR, BUSHING
	AR	AR		29	1006776-22	INSULATION SLEEVING
	2	2		28	1010270	TRANSISTOR
	1	1		27	1010252-1	TRANSISTOR
	1	1		26	1010326	TRANSFORMER
	2	2		25	1010329-1	TRANSFORMER
	2	2		24	1010278-11	RESISTOR, FIXED
	1	1		23	1010345-1	TRANSISTOR
	2	2		22	MS35338-78	WASHER, LOCK
	1	1		21	1010364-543	RESISTOR, FIXED
	1	1		20	1006750-56	RESISTOR
	1	1		19	1010364-765	RESISTOR, FIXED
	1	1		18	1010569-105	RESISTOR, FIXED
	1	1		17	1010364-579	RESISTOR, FIXED
	4	4		16	1010364-445	RESISTOR, FIXED
	1	1		15	1006750-43	RESISTOR
	1	1		14	1006750-48	RESISTOR
	2	2		13	1010369-97	RESISTOR, FIXED
	4	3		12	1006750-73	RESISTOR
	1	2		11	1006750-80	RESISTOR
	1	1		10	1010353-1	RELAY, ELECTROMAGNETIC,
	1	1		9	1010372-22	DIODE, SEMICONDUCTOR DEVICE
	4	4		8	1010392-1	DIODE, SEMICONDUCTOR DEVICE
	1	1		7	1010279-232	CAPACITOR, FIXED
	1	1		6	1010279-228	CAPACITOR, FIXED
	1	1		5	1010264-1	CAPACITOR, FIXED
	1	1		4	1015692	INSULATOR
	1	1		3	1015690	INSULATOR
	1	1		2	1015691	INSULATOR
	1	1		1	1015689	HEATSINK
	021	011	EFFECTIVITY	ITEM NO	PART OR IDENTIFYING NUMBER	NOMENCLATURE OR DESCRIPTION
QUANTITY REQUIRED					LIST OF PARTS AND MATERIALS	

1007571		
NEXT ASSY	USED ON	APPLICABLE DASH NO.
APPLICATION		
THE ASSEMBLY PART NUMBER IS THE DRAWING NUMBER AND THE DASH NUMBER THAT APPLIES		

UNLESS OTHERWISE SPECIFIED DIMENSIONS ARE IN INCHES TOLERANCES ON
FRACTIONS DECIMALS ANGLES
+ - XXX ±.005 + -
- - XX ±.02 - -
DO NOT SCALE THIS DRAWING
MATERIAL ——
CONTRACT NAS9-497

INSTRUMENTATION LAB
DRAWN Boyd 14 APR 64
CHECKED Edwards 27 APR 64
APPROVAL
APPROVAL
NASA APPROVAL
MIT APPROVAL

MANNED SPACECRAFT CENTER
HOUSTON, TEXAS

GIMBAL COARSE ALIGN AMPLIFIER MODULE ASSY

CODE IDENT NO 80630 | SIZE E | 1007541
SCALE 5:1 | SHEET 1 OF 2

1007541 C

REVISIONS					
SYM	ZONE	DESCRIPTION	CHG NO	DATE	APPD
A		REVISED PER TDRR 17331		2 MAR 65	GM
B		REVISED PER TDRR 19403		2 JUN 65	
C		REVISED PER TDRR 19429		3 JUN 65	

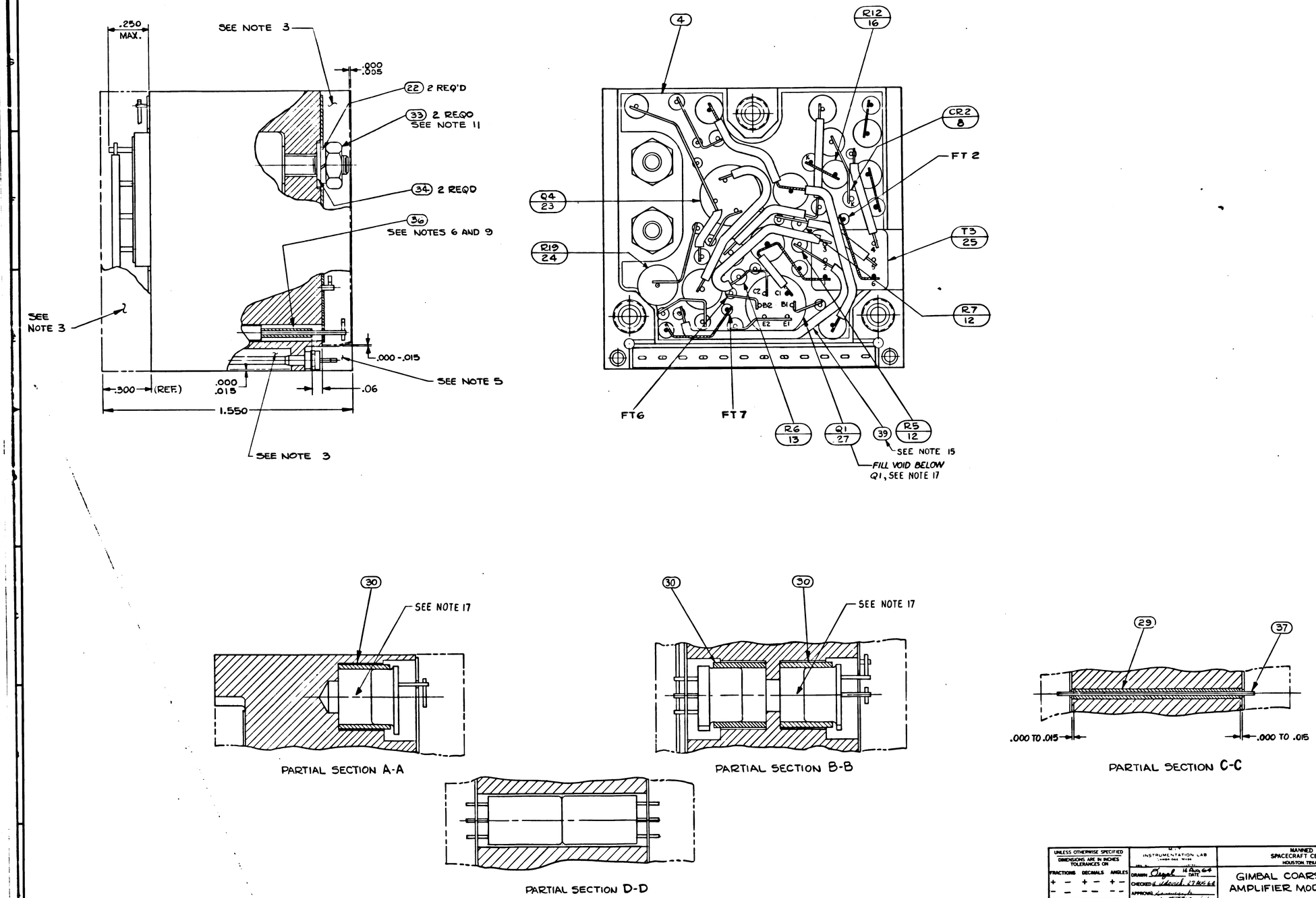

UNLESS OTHERWISE SPECIFIED DIMENSIONS ARE IN INCHES TOLERANCES ON FRACTIONS DECIMALS ANGLES + − + − + − − − − − − − DO NOT SCALE THIS DRAWING	INSTRUMENTATION LAB CAMBRIDGE, MASS. DRAWN Gezal 14 Aug 64 DATE CHECKED 27 AUG 64 APPROVAL APPROVAL	MANNED SPACECRAFT CENTER HOUSTON, TEXAS GIMBAL COARSE ALIGN AMPLIFIER MODULE ASSY
MATERIAL	NASA APPROVAL	CODE IDENT NO. 80230 SIZE E 1007541
CONTRACT NAS 9-497	MIT APPROVAL	SCALE 5:1 SHEET 2 OF 2