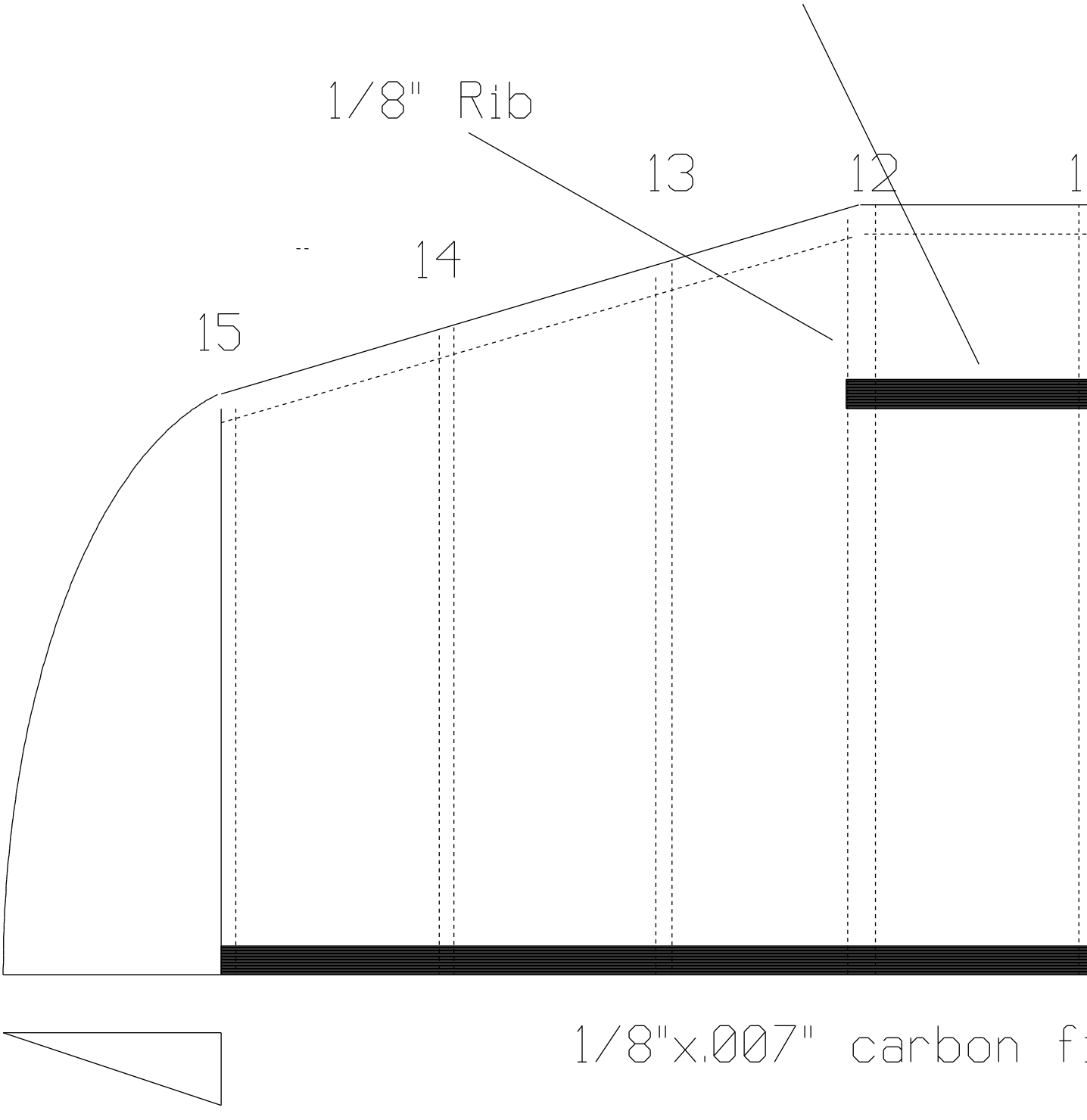
1/8" Rib
13
12
14
15
1/8"x.007" carbon fi