FC027
3/15/68

NATIONAL AERONAUTICS AND SPACE ADMINISTRATION

LUNAR MODULE SYSTEMS HANDBOOK

VEHICLE LM-3

MARCH 15, 1968

PREPARED BY

FLIGHT CONTROL DIVISION

MANNED SPACECRAFT CENTER
HOUSTON, TEXAS

MSC 8305-68

APOLLO

LUNAR MODULE SYSTEMS HANDBOOK
VEHICLE LM-3

PREFACE

This handbook has been prepared by the Flight Control Division, Manned Spacecraft Center, Houston, Texas with technical support by Grumman Aircraft Engineering Corporation (GAEC). Information contained within this document represents the LM-3 Systems as of March 15, 1968.

This document is intended for specialized use by Flight Controllers in real-time and near real-time operations. Comments concerning the contents should be directed to FC41/Mr. James E. Hannigan, Lunar Module Systems Branch, Building 45, Room 428A, HU3-4626.

Section 7, Extravehicular Mobility Unit (EMU)/Extravehicular Activity (EVA), has been prepared by the Experiments Systems Branch, Flight Operations Directorate, Flight Control Division, Manned Spacecraft Center, Houston, Texas. Comments concerning the contents of this section should be directed to FC9/Mr. Melvin F. Brooks, Experiments Systems Branch, Building 45, Room 220B, HU3-5169.

This handbook is not to be reproduced without the written approval of the Chief, Flight Control Division, Manned Spacecraft Center, Houston, Texas.

Approved by:

James E. Hannigan
Chief, Lunar Module Systems Branch

John D. Hodge
Chief, Flight Control Division

CONTENTS

Section		Page	Effective Date
1	INTRODUCTION		
	Vehicle Configuration	1-1	3-15-68
2	STRUCTURES		
3	CREW SYSTEMS		
4	SEQUENTIAL AND PYROTECHNICS		
	Pyro System Notes	4-2	3-15-68
5	ELECTRICAL		
	Electrical Notes	5-5	3-15-68
6	ENVIRONMENTAL CONTROL		
	Environmental Notes	6-5	3-15-68
7	EXTRAVEHICULAR MOBILITY UNIT		
	Extravehicular Mobility Unit Notes	7-4	3-15-68
8	COMMUNICATIONS		
	Communications Notes	8-5	3-15-68
9	INSTRUMENTATION		
10	GUIDANCE AND CONTROL		
11	PROPULSION		
12	REACTION CONTROL		
13	DEVELOPMENT FLIGHT INSTRUMENTATION		

* DRAWINGS

Drawing Number		Page	Effective Date
3.1	LIGHTING SYSTEM	3-2	3-15-68
3.2	MISSION/EVENT TIMERS	3-3	3-15-68
4.1	PYROTECHNIC SYSTEM	4-3	3-15-68
5.1	ELECTRICAL OVERVIEW	5-2	3-15-68
5.2	ELECTRICAL DC POWER	5-3	3-15-68
5.3	ELECTRICAL AC POWER	5-4	3-15-68
6.1	ENVIRONMENTAL OVERVIEW	6-2	3-15-68
6.2	ENVIRONMENTAL O_2 SUPPLY/SUIT LOOP	6-3	3-15-68
6.3	ENVIRONMENTAL H_2O SUPPLY/GLYCOL LOOP	6-4	3-15-68
7.1	EXTRAVEHICULAR MOBILITY UNIT OVERVIEW	7-2	3-15-68
7.2	EXTRAVEHICULAR MOBILITY UNIT DETAIL SCHEMATIC	7-3	3-15-68
8.1	COMMUNICATIONS OVERVIEW	8-2	3-15-68
8.2	COMMUNICATIONS SYSTEM	8-3	3-15-68
8.3	COMMUNICATIONS RF	8-4	3-15-68
8.4	COMMUNICATIONS SPA	8-5	3-15-68
8.5	Sheet 1 of 5 COMMUNICATION MODES ST-1 & ST-2	8-9	3-15-68
8.5	Sheet 2 of 5 COMMUNICATION MODES ST-3 & ST-4	8-10	3-15-68
8.5	Sheet 3 of 5 COMMUNICATION MODES ST-5 & ST-6	8-11	3-15-68
8.5	Sheet 4 of 5 COMMUNICATION MODES ST-7 & ST-8	8-12	3-15-68
8.5	Sheet 5 of 5 COMMUNICATION MODES ST-9 & ST-10	8-13	3-15-68
9.1	INSTRUMENTATION OVERVIEW	9-2	3-15-68
9.2	INSTRUMENTATION DIGITAL MUX	9-3	3-15-68
9.3	INSTRUMENTATION ANALOG MUX	9-4	3-15-68
9.4	CAUTION AND WARNING INSTRUMENTATION	9-5	3-15-68
9.5	INSTRUMENTATION C&W WARNING	9-6	3-15-68
9.6	INSTRUMENTATION C&W CAUTION	9-7	3-15-68
9.7	INSTRUMENTATION PYROTECHNIC	9-8	3-15-68

Drawing Number		Page	Effective Date
9.8	INSTRUMENTATION ELECTRICAL	9-9	3-15-68
9.9	INSTRUMENTATION ENVIRONMENTAL	9-10	3-15-68
9.10	INSTRUMENTATION COMMUNICATIONS	9-11	3-15-68
9.11	INSTRUMENTATION GUIDANCE	9-12	3-15-68
9.12	INSTRUMENTATION CES	9-13	3-15-68
9.13	INSTRUMENTATION DPS	9-14	3-15-68
9.14	INSTRUMENTATION APS	9-15	3-15-68
9.15	INSTRUMENTATION RCS	9-16	3-15-68
9.16	INSTRUMENTATION RR	9-17	3-15-68
9.17	INSTRUMENTATION LR	9-18	3-15-68
9.18	INSTRUMENTATION AGS	9-19	3-15-68
10.1	G&C OVERVIEW	10-2	3-15-68
10.2	G&N OVERVIEW	10-3	3-15-68
10.3	SCS OVERVIEW	10-4	3-15-68
10.4	DISPLAY SWITCHING	10-5	3-15-68
10.5	MODE CONTROL & BALANCE COUPLE SWITCH	10-6	3-15-68
10.6	PGNS/AGS SELECT SWITCHING	10-7	3-15-68
10.7	PGNS POWER SUPPLY	10-8	3-15-68
10.8	LGC POWER SIGNAL FLOW	10-9	3-15-68
10.9	LGC SYNCH & TIMING SIGNAL FLOW	10-10	3-15-68
10.10	Sheet 1 of 2 LGC INPUT INTERFACE	10-11	3-15-68
10.10	Sheet 2 of 2 LGC OUTPUT INTERFACE	10-12	3-15-68
10.11	Sheet 1 of 2 ISS	10-13	3-15-68
10.11	Sheet 2 of 2 ISS	10-14	3-15-68
10.12	MIT SIGNAL CONDITIONING PGNS	10-15	3-15-68
10.13	PGNS C&W LOGIC	10-16	3-15-68
10.14	RENDEZVOUS RADAR SIGNAL FLOW	10-17	3-15-68
10.15	TRANSPONDER	10-18	3-15-68

Drawing Number		Page	Effective Date
10.16	Sheet 1 of 2 LANDING RADAR SIGNAL FLOW	10-19	3-15-68
10.16	Sheet 2 of 2 LANDING RADAR SIGNAL FLOW	10-20	3-15-68
10.17	SCS POWER DISTRIBUTION	10-22	3-15-68
10.17.1	AEA/ASA POWER SUPPLY	10-23	3-15-68
10.17.2	ATCA POWER SUPPLY	10-24	3-15-68
10.17.3	DECA POWER SUPPLY	10-25	3-15-68
10.18	AGS SIGNAL FLOW	10-26	3-15-68
10.19	RCS TCA WARNING	10-27	3-15-68
10.20.1	ACA	10-28	3-15-68
10.20.2	LIMITER	10-29	3-15-68
10.20.3	AMPLIFIER 1	10-30	3-15-68
10.20.4	DEMOD & PRM	10-31	3-15-68
10.20.5	AMPLIFIER 2	10-32	3-15-68
10.20.6	DETECTORS	10-33	3-15-68
10.20.7	LOGIC ELEMENTS	10-34	3-15-68
10.20.8	TTCA	10-35	3-15-68
10.20.9	DRIVERS	10-36	3-15-68
10.20	RCS SIGNAL FLOW	10-37	3-15-68
10.21	DESCENT ENGINE SIGNAL FLOW	10-38	3-15-68
10.22	DESCENT GIMBALING AND THROTTLING	10-39	3-15-68
10.23	ASCENT ENGINE SIGNAL FLOW	10-40	3-15-68
11.1	PROPULSION DESCENT SYSTEM SCHEMATIC	11-2	3-15-68
11.2	PROPULSION ASCENT SYSTEM SCHEMATIC	11-3	3-15-68
11.3	ASCENT/DESCENT PROPULSION INTEGRATED ELECTRICAL SCHEMATIC	11-4	3-15-68
12.1.1	RCS ELECTRICAL DETAIL 1 AND 2	12-2	3-15-68
12.1.2	RCS ELECTRICAL DETAIL 3 AND 4	12-3	3-15-68
12.1.3	RCS ELECTRICAL DETAIL 5	12-4	3-15-68
12.1.4	RCS ELECTRICAL DETAIL 6 AND 7	12-5	3-15-68
12.2	RCS MECHANICAL SCHEMATIC	12-6	3-15-68
13.1	DFI SYSTEM	13-2	3-15-68

Figure		Page	Effective Date
2-1	DOCKING AND EVA AIDS.	2-1	3-15-68
2-2	LM EXTERIOR.	2-2	3-15-68
2-3	LM INTERIOR.	2-3	3-15-68
2-4	LM LANDING GEAR.	2-4	3-15-68
3-1	LIGHTING CONTROL/DISPLAY.	3-1	3-15-68
3-2	LM-3 CONTROL/DISPLAY.	3-4	3-15-68
4-1	SEQUENTIAL AND PYROTECHNICS CONTROL/DISPLAY.	4-1	3-15-68
5-1	ELECTRICAL CONTROL/DISPLAY.	5-1	3-15-68
5-2	ECA overcurrent trip limits.	5-11	3-15-68
5-3	Battery heat loads.	5-12	3-15-68
5-4	Inverter heat load and dc input current vs ac load.	5-13	3-15-68
5-5	Primary battery voltage vs current characteristics.	5-14	3-15-68
6-1	ENVIRONMENTAL CONTROL/DISPLAY	6-1	3-15-68
6-2	Estimated glycol temperature (GF9998U) profile for water boiler startup and shutdown.	6-9	3-15-68
6-3	Descent O_2 quantity vs pressure and temperature.	6-10	3-15-68
6-4	Ascent O_2 quantity vs pressure and temperature.	6-11	3-15-68
6-5	Glycol accumulator pressure vs accumulator level.	6-12	3-15-68
6-6	Flow rate versus pump ΔP and glycol temperature.	6-13	3-15-68
7-1	EXTRAVEHICULAR MOBILITY UNIT CONTROL/DISPLAY.	7-1	3-15-68
8-1	COMMUNICATIONS CONTROL/DISPLAY.	8-1	3-15-68
8-2	Communications antenna locations.	8-7	3-15-68
9-1	INSTRUMENTATION CONTROL/DISPLAY.	9-1	3-15-68
10-1	G&C CONTROL/DISPLAY.	10-1	3-15-68
10-2.1	AGS phase plane-wide deadband for ascent or descent gains.	10-55	3-15-68

Figure		Page	Effective Date
10-2.2	AGS phase plane-narrow deadband for descent gains.	10-56	3-15-68
10-2.3	AGS phase plane-narrow deadband for ascent gains.	10-57	3-15-68
10-3	AGS logic flow diagram.	10-58	3-15-68
11-1	PROPULSION CONTROL/DISPLAY.	11-1	3-15-68
11-2	Typical super critical helium pressure development.	11-5	3-15-68
11-3.1	Descent engine-weight vs ΔV (0-2400 fps).	11-6	3-15-68
11-3.2	Descent engine-weight vs ΔV (1000-6200 fps).	11-7	3-15-68
11-4	APS helium pressure vs burn time.	11-8	3-15-68
11-5	APS helium source pressure vs temperature.	11-9	3-15-68
11-6.1	Ascent engine-weight vs ΔV (1-5 sec).	11-10	3-15-68
11-6.2	Ascent engine-weight vs ΔV (5-25 sec).	11-11	3-15-68
11-6.3	Ascent engine-weight vs ΔV (25-450 sec).	11-12	3-15-68
11-7	Combined CSM/LM weight vs ΔV-descent engine.	11-13	3-15-68
11-8	Combined CSM/LM weight vs ΔV-ascent engine.	11-14	3-15-68
12-1	RCS CONTROL/DISPLAY.	12-1	3-15-68
12-2	RCS propellant remaining.	12-7	3-15-68
12-3	Propellant consumption for translation (unstaged).	12-8	3-15-68
12-4	Propellant consumption for translation (staged) in Y and Z axis (2 thrusters on for translation)	12-9	3-15-68
12-5.1	Vehicle weight vs ΔV (8-40 secs)-unstaged 4-jet translation.	12-10	3-15-68
12-5.2	Vehicle weight vs ΔV (40-75 secs)-unstaged 4-jet translation.	12-11	3-15-68
12-5.3	Vehicle weight vs ΔV (75-110 secs)-unstaged 4-jet translation.	12-12	3-15-68
12-5.4	Vehicle weight vs ΔV (110-145 secs)-unstaged 4-jet translation.	12-13	3-15-68
12-5.5	Vehicle weight vs ΔV (145-175 secs)-unstaged 4-jet translation.	12-14	3-15-68
12-6.1	Vehicle weight vs ΔV (5-25 secs)-staged 4-jet translation.	12-15	3-15-68

Figure		Page	Effective Date
12-6.2	Vehicle weight vs ΔV (25-65 secs)-staged 4-jet translation.	12-16	3-15-68
12-7.1	Combined CSM/LM weight vs ΔV-RCS jet ullage.	12-17	3-15-68
12-7.2	Combined CSM/LM weight vs ΔV-RCS jet ullage.	12-18	3-15-68
12-8	Moment of inertia vs unstaged weight.	12-19	3-15-68
12-9	Center of gravity vs unstaged weight.	12-20	3-15-68
12-10	Moment of inertia vs ascent stage weight.	12-21	3-15-68
12-11	Center of gravity vs ascent stage weight	12-22	3-15-68
12-12	Propellant consumption rate for max deadband, 5 degree.	12-23	3-15-68
12-13	Propellant consumption rate for min deadband, .3 degree, 1 degree.	12-24	3-15-68
13-1	DFI CONTROL/DISPLAY.	13-1	3-15-68

Table		Page	Effective Date
1-I	STANDARD ABBREVIATIONS AND ACRONYMS	1-6	3-15-68
1-II	DRAWING SYMBOLS	1-13	3-15-68
4-I	PYROTECHNIC FUNCTIONS AND COMPONENTS	4-2	3-15-68
4-II	DESCENT STAGE FUNCTIONS LOST AT STAGING	4-2	3-15-68
5-I	LM SUBSYSTEM VOLTAGE REQUIREMENTS	5-6	3-15-68
5-II	CIRCUIT BREAKERS	5-7	3-15-68
6-I	ECS VALVE/CABIN FAN PRESSURE SCHEDULE	6-7	3-15-68
6-II	SUIT LOOP MODES	6-8	3-15-68
6-III	GLYCOL LOOP MODES	6-8	3-15-68
6-IV	ECS SYSTEMS DATA SHEET	6-14	3-15-68
7-I	TELEMETRY	7-16	3-15-68
7-II	LM/CSM/EMU COMMUNICATION CONFIGURATION	7-17	3-15-68
8-I	COMMUNICATIONS MODES	8-8	3-15-68
9-I	SIGNAL CONDITIONER SUB-ASSEMBLY	9-20	3-15-68
9-II	MEASUREMENTS ON UNREGULATED DC	9-21	3-15-68
9-III	TELEMETERED AND DISPLAYED PARAMETERS	9-22	3-15-68
9-IV	SIGNAL CONDITIONER MEASUREMENT ASSIGNMENT	9-34	3-15-68
9-V	TM VS PAM/SEQUENCE GATES	9-35	3-15-68
10-I	POWER REFERENCE TABLE	10-8	3-15-68
10-II	SCS POWER DISTRIBUTION	10-21	3-15-68
10-III	LGC DOWNLINK	10-41	3-15-68
10-IV	LGC DOWNLINK BIT ASSIGNMENT	10-49	3-15-68
10-V	LGC REFERENCE MATRIX (SUNDANCE)	10-50	3-15-68
10-VI	SUNDANCE CROSS-REFERENCE TABLE	10-51	3-15-68
10-VII	AGS DIGITAL DOWNLINK	10-52	3-15-68
11-I	CAPABILITIES AND LIMITATIONS APS, DPS	11-15	3-15-68
12-I	CAPABILITIES AND LIMITATIONS RCS	12-25	3-15-68

*

SECTION 1

INTRODUCTION

This handbook has been prepared to represent the LM-3 vehicle as of March 15, 1968.

The following GAEC Level III drawings and engineering orders were used to generate the indicated LM-3 LSH schematics:

Dwg 3.1	LDW 340 - 53000 Rev D, E1 through E4, E7 LDW 390 - 53000 Rev D, E1 through E6
Dwg 3.2	LDW 350 - 53000 Rev C
Dwg 4.1	LDW 320 - 53000 Rev D, E1 and E2 LDW 360 - 53002 Rev A
Dwg 5.1, 5.2, 5.3	LDW 390 - 53000 Rev D, Sheets 4,5,6 and 8, E1
Dwg 6.1, 6.2, 6.3	LDW 330 - 53000 Rev J, K1 through K3
Dwg 7.1, 7.2	SVSK #60221 SVSK #60223-A SVSK #60225 SVSK #60226-A SVSK #60227-A SVSK #60229-A SVSK #60244-B SVSK #61242 SVSK #62977 SV #706100 AGL #100001 SV #730101
Dwg 8.1, 8.2, 8.3, 8.4, 8.5	LDW 380 - 53000 Rev E, F1 and F2
Dwg 9.1	LDW 360 - 21000 Rev H, J1
Dwg 9.2, 9.3	Lunar Excursion Module PCMTEA Support Manual by Radiation Incorporated, Melbourne, Florida LED 360 - 318 Measurement Requirements and Configuration Data
Dwg 9.4	LDW 360 - 21000 Rev H, J1 LSP 360 - 8D
Dwg 9.5, 9.6	LDW 360 - 21000 Rev H, J1 LDW 360 - 21001 Rev D, E1 LDW 360 - 53002 Rev A LDW 360 - 52003 Rev C, D1 through D4 LDW 360 - 52004 Rev B, C1 through C3 LDW 360 - 21005 Rev D, E1 through E4

	LDW 360 - 52007 Rev C, D3 and D4
	LDW 360 - 53008 Rev A, B1 and B2
	LDW 360 - 53009 Rev A
	LDW 360 - 53010 Rev B, C1
	LDW 360 - 21013 Rev C, D1 and D2
Dwg 9.7	LDW 320 - 53000 Rev D, E1 and E2
	LDW 360 - 53002 Rev A
Dwg 9.8	LDW 390 - 53000 Rev D, E1 through E5
	LDW 360 - 53009 Rev A
Dwg 9.9	LDW 330 - 53000 Rev J, K1 through K3
	LDW 360 - 52003 Rev C, D1 through D4
Dwg 9.10	LDW 380 - 53000 Rev E, F1 and F2
	LDW 360 - 53008 Rev A, B1 and B2
Dwg 9.11	LDW 360 - 21001 Rev D, E1
	LDW 370 - 53000 Rev C, D1
	LDW 370 - 53001 Rev B, C1 and C2
	LDW 390 - 53000 Rev D, E1 through E6
Dwg 9.12	LDW 300 - 53003 Rev E, F1 and F3 through F5
	LDW 360 - 53004 Rev A
Dwg 9.13	LDW 270 - 53000 Rev D, E1 through E7
	LDW 360 - 52007 Rev C, D3 and D4
Dwg 9.14	LDW 270 - 53000 Rev D, E1 through E7
	LDW 360 - 52007 Rev C, D3 and D4
	LDW 390 - 53000 Rev D, (Sheets 6 and 7) E1 through E6
Dwg 9.15	LDW 310 - 53000 Rev E, F1 through F7
	LDW 360 - 52004 Rev B, C1 through C3 and C5
Dwg 9.16, 9.17	LDW 370 - 53000 Rev E, D1 and D2
	LDW 360 - 21013 Rev E, D1 and D2
	LDW 350 - 53000
Dwg 9.18	LDW 360 - 21005 Rev D, E1 and E4
	LDW 300 - 21002 Rev F, G1 through G3
Dwg 10.1	LDW 270 - 53000 Rev D, E7
	LDW 300 - 53003 Rev E, F1, F3 through F9
	LDW 350 - 53000 Rev B, C1 through C6
	LDW 370 - 53000 Rev C, D1 and D2
	LDW 390 - 53000 Rev D, E1 through E7
Dwg 10.2	LDW 300 - 53003 Rev E, F1, F3 through F9
	LDW 350 - 53000 Rev B, C1 through C6
	LDW 370 - 53000 Rev C, D1 and D2
	LDW 390 - 53000 Rev D, E1 through E7

Dwg 10.3	LDW 300 - 21002 Rev G LDW 300 - 53003 Rev E, F1 and F3 through F9 LDW 350 - 53000 Rev C TRW Systems 03358-6031-T000, 15 October 1967, Support Manual Data for LM AGS RCA LDR-(P)-6100-18 ATCA Production Model Design Report RCA LDR-(B)-6200-14, 15 December, 1965, Amendment 1, 15 December 1967, DECA Production Model Design Report
Dwg 10.4	LDW 350 - 53000 Rev C
Dwg 10.5	LDW 300 - 53003 Rev E, F1 and F3 through F9
Dwg 10.6	LDW 300 - 53003 Rev E, F1 and F3 through F9
Dwg 10.7	LDW 370 - 53001 Rev B
Dwg 10.8, 10.9	LDW 370 - 53000 Rev C, D1 LDW 370 - 53001 Rev B, C1 and C2
Dwg 10.10	LDW 370 - 53001 Rev B, C1 and C2
Dwg 10.11	LDW 370 - 53001 Rev B, C1 and C2
Dwg 10.12	LDW 370 - 53001 Rev B, C1 and C2
Dwg 10.13	MIT R-557 - (GSOP) - Section 4
Dwg 10.14	LDW 370 - 53000 Rev C, D1 and D2
Dwg 10.15	CSM Handbook Dwg
Dwg 10.16	LDW 370 - 53000 Rev C, D1 and D2
Dwg 10.17	LDW 300 - 53003 Rev E, F1 and F3 through F9 RCA LDR - (P) - 6100 - 18 ATCA Production Models Design Report RCA LDR - (B) - 6200 - 14, 15 December 1965, Amendment 1, 15 December 1967, DECA Production Model Design Report
Dwg 10.17.1	TRW Systems 03358-6031-T000, 15 October 1967, Support Manual Data for LM AGS LDW 300 - 21002 Rev G
Dwg 10.17.2	LDW 300 - 53003 Rev E, F1 and F3 through F9 RCA LDR - (P) - 6100 - 18 ATCA Production Model Design Report
Dwg 10.17.3	LDW 300 - 53003 Rev E, F1 and F3 through F9 RCA LDR - (B) - 6200 - 14, 15 December 1965, Amendment 1, 15 December 1967, DECA Production Model Design Report

Dwg 10.18	TRW Systems 03358 - 6031 - T000, 15 December 1967, Support Manual Data for LM AGS LDW 300 - 21002 Rev G
Dwg 10.19	LDW 310 - 53000 Rev E
Dwg 10.20	LDW 300 - 53003 Rev E, F1 and F3 through F9 RCA LDR - (P) - 6100 - 18 ATCA Production Model Design Report
Dwg 10.20.1	LDW 300 - 53003 Rev E, F1 and F3 through F9
Dwg 10.20.2, 10.20.3, 10.20.4, 10.20.5, 10.20.6, 10.20.7	LDW 300 - 53003 Rev E, F1 and F3 through F9 RCA LDR - (P) - 6100 - 18 ATCA Production Model Design Report
Dwg 10.20.8	LDW 300 - 53003 Rev E, F1 and F3 through F9
Dwg 10.20.9	LDW 300 - 53003 Rev E, F1 and F3 through F9 RCA LDR - (P) - 6100 - 18 ATCA Production Model Design Report
Dwg 10.21, 10.22	RCA LDR - (B) - 6200 - 14, 15 December 1965, Amendment 1, 15 December 1967, DECA Production Model Design Report LDW 300 - 53003 Rev E, F1 and F3 through F9
Dwg 10.23	RCA LDR - (P) - 6100 - 18, ATCA Production Model Design Report LDW 300 - 53003 Rev E, F1 and F3 through F9
Dwg 11.1	LDW 270 - 53000 Rev D, E1 through E6 LDW 360 - 53007 Rev C, D1 through D4
Dwg 11.2	LDW 270 - 53000 Rev D, E1 through E5 LDW 310 - 53000 Rev E, F1 through F7 LDW 360 - 53010 Rev B, C1 and C2
Dwg 11.3	LDW 320 - 53000 Rev D LDW 300 - 53001, A1 and A2 LDW 300 - 53003 Rev E, F1 and F2 and F4
Dwg 12.1.1, 12.1.2, 12.1.3, 12.1.4	LDW 310 - 53000 Rev E, F1 through F6
Dwg 12.2	LDW 310 - 53000 Rev E, F1 through F6

Dwg 13.1	LDW 360 - 52500 Rev C, D1 through D5
	LDW 360 - 21501 Rev C, D1
	LDW 360 - 52502 Rev A, B1
	LDW 360 - 52503 Rev A, B1 through B5
	LDW 360 - 21504 Rev B, C1 and C2
	LDW 360 - 52507 Rev C, D1 through D4
	LDW 360 - 52508 Rev A, B1 through B3
	LDW 360 - 52510 Rev A, B1 through B3
	LDW 360 - 53511, A1
	LDW 360 - 53512
	LDW 360 - 52513 Rev B, C1 through C4

*

TABLE 1-I.- STANDARD ABBREVIATIONS AND ACRONYMS FOR LM DOCUMENTATION

AC	ALTERNATING CURRENT	BIP	BIPROPELLANT
ACA	ATTITUDE CONTROLLER ASSEMBLY	BCN	BEACON
ACCUM	ACCUMULATOR	BPS	BITS PER SECOND
ACT	ACTUAL/ACTUATOR	BTS	BITS PER SAMPLE
AEA	ABORT ELECTRONICS ASSEMBLY	B/U	BACKUP
AEAA	ASCENT ENGINE ARMING ASSEMBLY	CAB	CABIN
AELD	ASCENT ENGINE LATCHING DEVICE	CAL	CALIBRATE/CALIBRATION
AGC	AUTOMATIC GAIN CONTROL	CALC	CALCULATE/CALCULATED
AGS	ABORT GUIDANCE SECTION	CB	CIRCUIT BREAKER
ALIGN	ALIGNMENT	C-BND	C-BAND
ALM	ALARM	CBL	CABLE
ALT	ALTIMETER/ALTITUDE/ALTERNATE	CBW	CONSTANT BANDWIDTH
AM	AMMETER/AMPLITUDE MODULATION	CC	CONTACT CLOSURE
AMP	AMPERE	CDR	COMMANDER
AMP-HR	AMPERE HOUR	CDU	COUPLING DATA UNIT
ANT	ANTENNA	CES	CONTROL ELECTRONICS SECTION
AOT	ALIGNMENT OPTICAL TELESCOPE	CG	CENTER OF GRAVITY
APS	ASCENT PROPULSION SYSTEM	CHAR	CHARACTER
ARM	ARMED	CKT	CIRCUIT
ASA	ABORT SENSOR ASSEMBLY	CL	CLOSE
ASC	ASCENT	CLSD	CLOSED
ASSY	ASSEMBLY	CMD	COMMAND
ATCA	ATTITUDE & TRANSLATION CONTROL ASSEMBLY	CMDED	COMMANDED
ATT	ATTITUDE	CNTL	CONTROL
AUTO	AUTOMATIC	CO_2	CARBON DIOXIDE
AUX	AUXILIARY	COAS	CREWMAN OPTICAL ALIGNMENT SIGHT
AVAIL	AVAILABLE	COMM	COMMUNICATIONS
AZ	AZIMUTH	COMP	COMPARE
BAT	BATTERY	COND	CONDITION/CONDITIONING/CONDITIONER
BD	BAND	CONT	CONTINUE

*

TABLE 1-I.- STANDARD ABBREVIATIONS AND ACRONYMS FOR LM DOCUMENTATION - Continued

COOL	COOLANT
COS	COSINE
CP	COMMAND PILOT
CPS	CYCLES PER SECOND
CRSFD	CROSSFEED
CRT	CATHODE-RAY-TUBE
CSM	COMMAND AND SERVICE MODULE
CTG	CARTRIDGE
CUR	CURRENT
CW	CONTINUOUS WAVE
CWEA	CAUTION & WARNING ELECTRONICS ASSY
D	DOWNWARD THRUSTING RCS ENGINE
DAC	DIGITAL TO ANALOG CONVERTER
DAP	DIGITAL AUTO PILOT
DB	DECIBEL
DBM	DECIBEL ABOVE 1 MILLIWATT
DBW	DECIBEL ABOVE 1 WATT
DC	DIRECT CURRENT
DCA	DIGITAL COMMAND ASSEMBLY
DECA	DESCENT ENGINE CONTROL ASSEMBLY
DECR	DECREASE
DEDA	DATA ENTRY AND DISPLAY ASSEMBLY
DEG	DEGREE
DEMOD	DEMODULATOR
DES	DESCENT
DET	DETENT/DETECTOR
DFI	DEVELOPMENTAL FLIGHT INSTRUMENTATION
DFR	DEADFACE RELAY
DIFF	DIFFERENCE/DIFFERENTIAL
DIG	DIGITAL
DIR	DIRECT
DISCH	DISCHARGE
DISP	DISPLAY
DIV	DIVERTER
DLAY	DELAY
DPLY	DEPLOY/DEPLOYED
DPS	DESCENT PROPULSION SYSTEM
DSEA	DATA STORAGE ELECTRONICS ASSEMBLY
DSKY	DISPLAY AND KEYBOARD
ECA	ELECTRONIC CONTROL ASSEMBLY
ECI	ELECTRICAL CIRCUIT INTERRUPTER
ECS	ENVIRONMENTAL CONTROL SYSTEM
ED	EXPLOSIVE DEVICE
EKG	ELECTROCARDIOGRAM
EL	ELECTROLUMINESCENT
ELEC	ELECTRICAL/ELECTRICALLY
EMER	EMERGENCY
EMI	ELECTROMAGNETIC INTERFERENCE
EMU	EXTRAVEHICULAR MOBILITY UNIT
ENBL	ENABLE
ENG	ENGINE
ENGR	ENGINEER
EPS	ELECTRICAL POWER SYSTEM
EQUIP	EQUIPMENT
ERA	ELECTRONIC REPLACEABLE ASSEMBLY
ERR	ERROR
EVA	EXTRAVEHICULAR ACTIVITY
EVVA	EXTRAVEHICULAR VISOR ASSEMBLY
EXT	EXTEND
F	FAHRENHEIT/FORWARD THRUSTING RCS ENGINE

*

TABLE 1-I.- STANDARD ABBREVIATIONS AND ACRONYMS FOR LM DOCUMENTATION - Continued

FAIL	FAILURE
FDAI	FLIGHT DIRECTOR ATTITUDE INDICATOR
FITH	FIRE IN THE HOLE
FL	FLAG
FM	FREQUENCY MODULATION
FP	FLIGHT PROGRESS
FREQ	FREQUENCY
FWD	FORWARD
G	GRAVITY
GASTA	GIMBAL ANGLE SEQUENCING TRANSFORMATION ASSEMBLY
GDA	GIMBAL DRIVE ACTUATOR
GLY	GLYCOL
GMBL	GIMBAL
GND	GROUND
GOX	GASEOUS OXYGEN
GSE	GROUND SUPPORT EQUIPMENT
GUID	GUIDANCE
HBR	HIGH-BIT RATE
HE	HELIUM
$H/\dot{H}$	ALTITUDE/ALTITUDE RATE
Hg	MERCURY
HI	HIGH
HL	HIGH LEVEL
HLD	HOLD
H_2O	WATER
HSD	HIGH-SPEED DATA
HTR	HEATER
HV	HIGH VOLTAGE
HVR	HOVER
H/X	HEAT EXCHANGER
HZ	HERTZ
ICS	INTERCOMMUNICATION SYSTEM
ID	IDENTIFICATION
IF	INTERMEDIATE FREQUENCY
IG	INNER GIMBAL
IGA	INNER GIMBAL ANGLE
IGN	IGNITION
IMU	INERTIAL MEASUREMENT UNIT
IN	INLET
INJ	INJECTOR
INCR	INCREASE
INST	INSTRUMENTATION
INV	INVERTER
IRIG	INERTIAL REFERENCE INTEGRATING GYRO
IS	INSTRUMENTATION SYSTEM
ISOL	ISOLATION
ISS	INERTIAL SENSOR SYSTEM
JETT	JETTISON
JD	JET DRIVER
KHZ	KILOHERTZ

*

TABLE 1-I.- STANDARD ABBREVIATIONS AND ACRONYMS FOR LM DOCUMENTATION - Continued

L	LEFT THRUSTING RCS ENGINE
LAT	LATITUDE/LATERAL
LBR	LOW-BIT RATE
LCA	LIGHTING CONTROL ASSEMBLY
LCG	LIQUID COOLED GARMENT
LDG	LANDING
LDR	LUT DEADFACE RELAY
LGC	LM GUIDANCE COMPUTER
LIM	LIMIT/LIMITS
LIOH	LITHIUM HYDROXIDE
LLC	LOW-LEVEL COMMUNICATOR
LLS	LOW-LEVEL SENSOR
LMP	LUNAR MODULE PILOT
LO	LOw
LONG	LONGITUDE
LPD	LANDING POINT DESIGNATOR
LR	LANDING RADAR
LSB	LEAST SIGNIFICANT BIT
LTG	LIGHTING
LUT	LAUNCH UMBILICAL TOWER
LV	LOW VOLTAGE
LVL	LEVEL
MAN	MANUAL
MAP	MESSAGE ACCEPTANCE PULSE
MAX	MAXIMUM
MDF	MILD DETONATING FUSE
MET	MISSION ELAPSED TIME
MFC	MAIN FEEDER CONTACTOR
MFLD	MANIFOLD
MG	MIDDLE GIMBAL
MGA	MIDDLE GIMBAL ANGLE
MIN	MINIMUM
MM	MILLIMETER(S)
MOCR	MISSION OPERATIONS CONTROL ROOM
MOD	MODULATOR/MODULATION
MON	MONITOR
MPS	MAIN PROPULSION SYSTEMS
MPX	MULTIPLEX/MULTIPLEXER
MSB	MOST SIGNIFICANT BIT
MSFN	MANNED SPACE FLIGHT NETWORK
MTR	METER/MOTOR
(-)	NEGATIVE
NC	NORMALLY CLOSED
NO	NORMALLY OPEN
NORM	NORMAL
NRZ	NON-RETURN-TO-ZERO
O_2	OXYGEN
OB	ONBOARD
OC	OVERCURRENT
OG	OUTER GIMBAL
OGA	OUTER GIMBAL ANGLE
OPN	OPEN
OPR	OPERATE
OPR ERR	OPERATOR ERROR
ORDEAL	ORBITAL RATE DISPLAY-EARTH AND LUNAR
OUT	OUTLET/OUTPUT
OSC	OSCILLATOR
O/T	OVERTEMPERATURE
OVR	OVER
OVRD	OVERRIDE

*

TABLE 1-I.- STANDARD ABBREVIATION AND ACRONYMS FOR LM DOCUMENTATION - Continued

OVHD	OVERHEAD
OX	OXIDIZER
PA	POWER AMPLIFIER
PAM	PULSE AMPLITUDE MODULATION
PART	PARTIAL
PBAT	PYRO BATTERY
PBW	PROPORTIONAL BANDWIDTH
PCM	PULSE CODE MODULATION
PCMTEA	PULSE CODE MODULATION AND TIMING ELECTRONICS ASSEMBLY
PCT	PERCENT
PGNCS	PRIMARY GUIDANCE, NAVIGATION AND CONTROL SYSTEM
PGNS	PRIMARY GUIDANCE AND NAVIGATION SYSTEM
PFS	PERCENT FULL SCALE
PIPA	PULSE INTEGRATING PENDULOUS ACCELEROMETER
PKG	PACKAGE
ΔP	DIFFERENTIAL PRESSURE
PLSD	PULSED
PLSS	PORTABLE LIFE SUPPORT SYSTEM
PM	PHASE MODULATION
PMP	PREMODULATION PROCESSOR
PNLS	PANELS
PO	POWER OUTPUT
POS	POSITION
PP	PARTIAL PRESSURE
PPS	PULSES PER SECOND
PQGS	PROPELLANT QUANTITY GAGING SYSTEM
PRESS	PRESSURE
PRF	PULSE REPETITION FREQUENCY
PRIM	PRIMARY
PRM	PULSE RATIO MODULATOR
PRN	PSEUDORANDOM NOISE
PROG	PROGRAM
PROP	PROPELLANT/PROPULSION
PSA	POWER AND SERVO ASSEMBLY
PSIA	POUNDS PER SQUARE INCH ABSOLUTE
PSID	POUNDS PER SQUARE INCH DIFFERENTIAL
PTA	PULSE TORQUE ASSEMBLY
PTT	PUSH-TO-TALK
PVR	PRECISION VOLTAGE REFERENCE
PWR	POWER
PYRO	PYROTECHNIC
QD	QUICK DISCONNECT
QTY	QUANTITY
QUAD	QUADRANT
R	RIGHT THRUSTING RCS ENGINE
RC/OC	REVERSE CURRENT/OVERCURRENT
RCCRA	ROUGH COMBUSTION CUTOFF REPLACEABLE ASSEMBLY
RCS	REACTION CONTROL SYSTEM
RCVR	RECEIVER
RD	RELAY DRIVER

*

TABLE 1-I.- STANDARD ABBREVIATIONS AND ACRONYMS FOR LM DOCUMENTATION - Continued

RDR	RADAR
REC	RECORDER
RECD	RECEIVED
REF	REFERENCE
REG	REGULATOR
REL	RELEASE
RET	RETRACT/RETURN
REV	REVERSE
RF	RADIO FREQUENCY
RFLT	REFLECT/REFLECTED
RGA	RATE GYRO ASSEMBLY
RJB	RELAY JUNCTION BOX
RLY	RELAY
RNDZ	RENDEZVOUS
RNG	RANGE/RANGING
RR	RENDEZVOUS RADAR
RRE	RENDEZVOUS RADAR ELECTRONICS
RS	REMOTED SITE
RSVR	RESOLVER
RUPT	RUPTURE
RZ	RETURN-TO-ZERO
S-BND	S-BAND
S/C	SPACECRAFT
SCERA	SIGNAL CONDITIONING ELECTRONICS REPLACEABLE ASSEMBLY
SCS	STABILIZATION AND CONTROL SYSTEM
SCO	SIGNAL CONTROLLED OSCILLATOR
SEC	SECONDARY/SECOND
SEL	SELECT
SEP	SEPARATION/SEPARATOR
SEQ	SEQUENCE
SET	SET/SETTING
SG	SIGNAL GENERATOR
SHE	SUPER CRITICAL HELIUM
SHFT	SHAFT
SIG	SIGNAL
SIN	SINE
SLA	SPACECRAFT LAUNCH ADAPTER
S/O	SHUTOFF
SOL	SOLENOID
SOV	SHUTOFF VALVE
SP	SPARE
SPA	SIGNAL PROCESSING ASSEMBLY
S/S	SAMPLES PER SECOND
SSR	STAFF SUPPORT ROOM
ST	STATIC
STBY	STANDBY
STGE	STAGE
STR	STRENGTH
STRB	STROBE
SUP	SUPPLY

*

TABLE 1-I.- STANDARD ABBREVIATIONS AND ACRONYMS FOR LM DOCUMENTATION - Concluded

SUSP	SUSPENSION
SVO	SERVO
SW	SWITCH
SYNCH	SYNCHRONIZATION
SYS	SYSTEM
TCA	THRUST CHAMBER ASSEMBLY
TCP	THRUST CHAMBER PRESSURE
TE	TIMING ELECTRONICS
TEMP	TEMPERATURE
THROT	THROTTLE
TJM	TOWER JETTISON MOTOR
TK	TANK
TLE	TRACKING LIGHT ELECTRONICS
TM	TELEMETRY
TOL	TOLERANCE
TRANS	TRANSLATION
TRNFR	TRANSFER
TRUN	TRUNNION
T/TCA	THRUST/TRANSLATION CONTROLLER ASSEMBLY
TTY	TELETYPE/TELETYPEWRITER
U	UPWARD THRUSTING RCS ENGINE
UDMH	UNSYMMETRICAL DIMETHYLHYDRAZINE
UHF	ULTRA HIGH FREQUENCY
V	VOLT
ΔV	CHANGE IN VELOCITY
VAC	ALTERNATING CURRENT VOLTS
VAR	VARIABLE
VCO	VOLTAGE CONTROL OSCILLATOR
VDC	DIRECT CURRENT VOLTS
VEL	VELOCITY
VHF	VERY HIGH FREQUENCY
VLV(S)	VALVE/VALVES
VOL	VOLUME
VOX	VOICE OPERATED RELAY
VPI	VALVE POSITION INDICATOR
VRMS	VOLT ROOT MEAN SQUARE
W	WATT
WB	WIDEBAND
W/B	WATER BOILER
X	CROSS/TRANS
XCVR	TRANSCEIVER
XMTR	TRANSMITTER
XPNDR	TRANSPONDER
(ϕ)	PHASE

Table 1-II.-DRAWING SYMBOL STANDARDS

1. Line Designation

Water

Oxygen

Nitrogen

N N

Helium

Primary Coolant

Secondary Coolant

Fuel

Hydrogen

Steam

S S S S

Suit Loop

Sense Lines

Oxidizer

Others

(Identification)

2. Buses and Grounds

Commander's Bus

V_{CDR}

LM Pilot's Bus

V_{LMP}

AC Bus

V
115A OR B ← Voltage and Bus
400 ~ ← Frequency

Floating Bus

V_{XXX} ← Voltage
XXX ← Name

System Ground

Frame Ground

Floating Ground

XXX ← Name

TABLE 1-II.- DRAWING SYMBOL STANDARDS (CONTINUED)

3. MECHANICAL SYMBOLS

Mechanical Filter

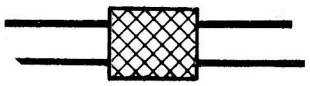

Burst Diaphragm

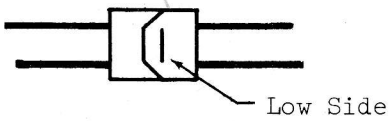

Venturi

Vent

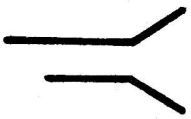

Thrust Neutralized Vent

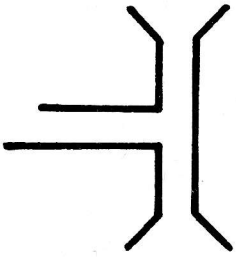

Self-Sealing Quick Disconnect

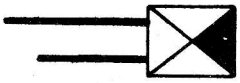

Quick Disconnect

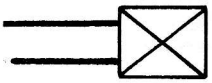

Quick Disconnect
Fill & Drain

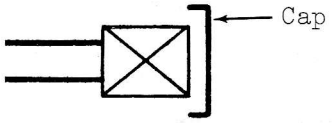

Fill and Drain

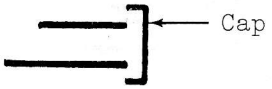

Ball Valve
Actuator

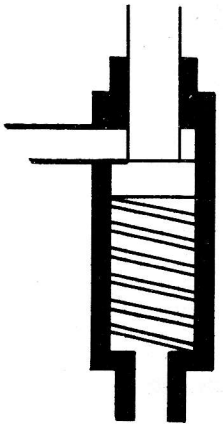

May be shown in depressed or partially depressed position

Valves - Shown shaded in closed position

Open

Closed

TABLE 1-II.- DRAWING SYMBOL STANDARDS (CONTINUED)

3. MECHANICAL SYMBOLS (CONT.)

Manual Valve

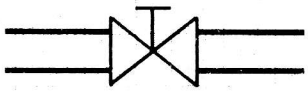

Check Valve

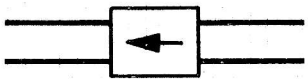

Check Valve with
Manual Override

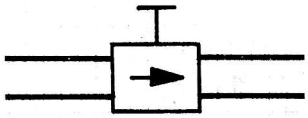

Orifice

(Flow Rate)

Pressure Regulator

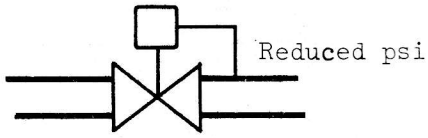

Pressure Regulator with
Manual Override

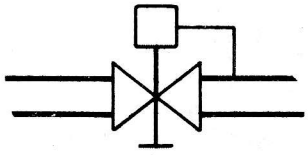

Relief Valve

Full Flow
Cracking
Reseat Pressure

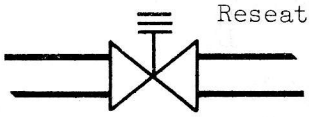

Ball Valve

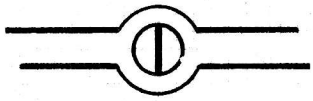

Ball Valve with
Internal Seal and Drain

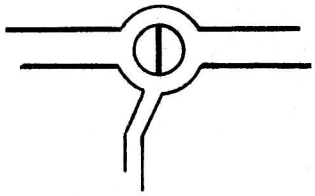

Three-Way Valve

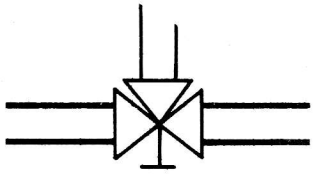

Solenoid Operated Valve
(Three-Way)

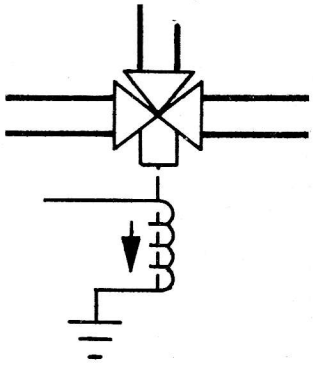

Solenoid Operated Valve
(Two-Way)

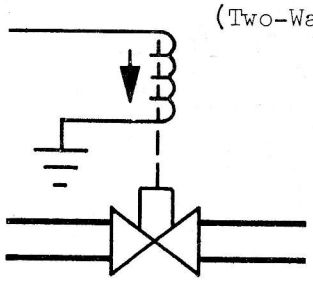

Name (Normal Position)

TABLE 1-II.- DRAWING SYMBOL STANDARDS (CONTINUED)

4. PYROTECHNICS

Interstage Umbilical Cutter

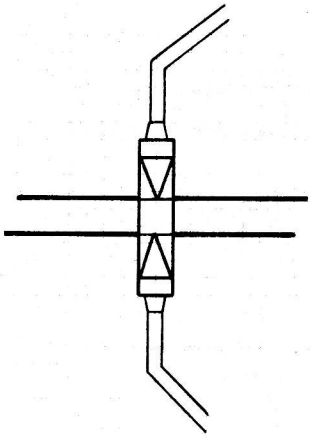

OR

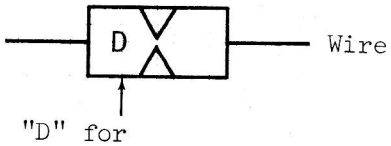

"D" for
Descent Stage

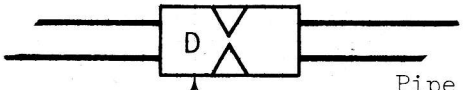

"D" for
Descent Stage

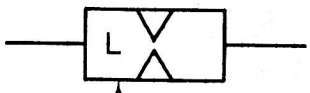

"L" for Launch
Vehicle (SLA)

Electrical Circuit Interrupter (ECI)

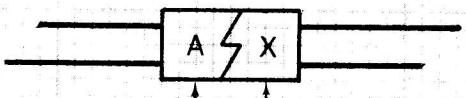

"A" for
Ascent Stage

1 = ECI #1 = P/J 174
2 = ECI #2 = P/J 173
3 = ECI #3 = P/J 172

5. RELAYS

Momentary Contacts

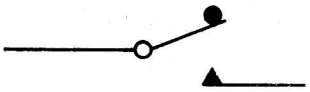

Latching Contacts

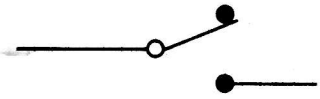

Non-Latching Relay
(De-Energized)

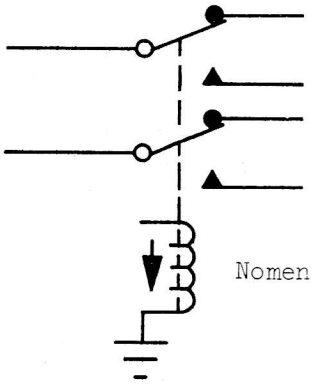

Latching Relay

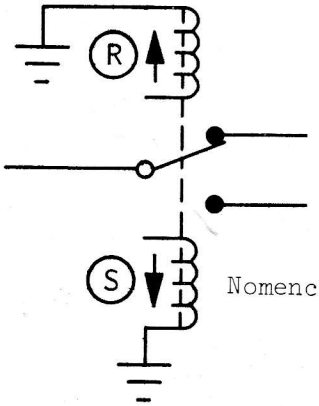

TABLE 1-II.- DRAWING SYMBOL STANDARDS (CONTINUED)

6. C/B, FUSES, AND MISC SWITCHES

Coax Switch

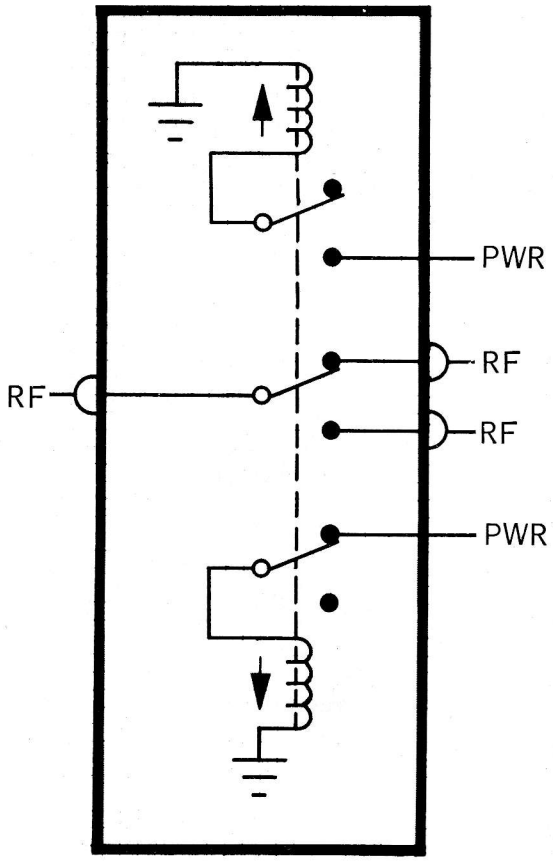

Push-Button Circuit Breaker

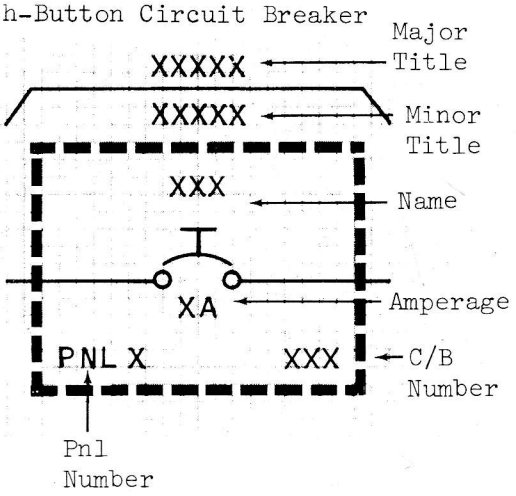

General Fuse

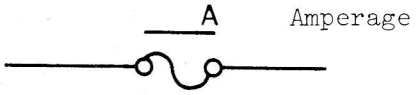

Fusistor

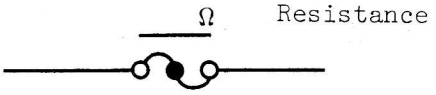

Baro Switch

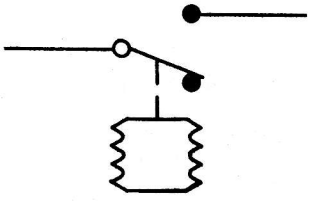

Close XXX psi or altitude

Open XXX psi or altitude

TABLE 1-II.- DRAWING SYMBOL STANDARDS (CONTINUED)

7. FLAGS

Position Flags

These flag symbols will show all states of a flag.

Three-Position Flag.-Spring load to the center position

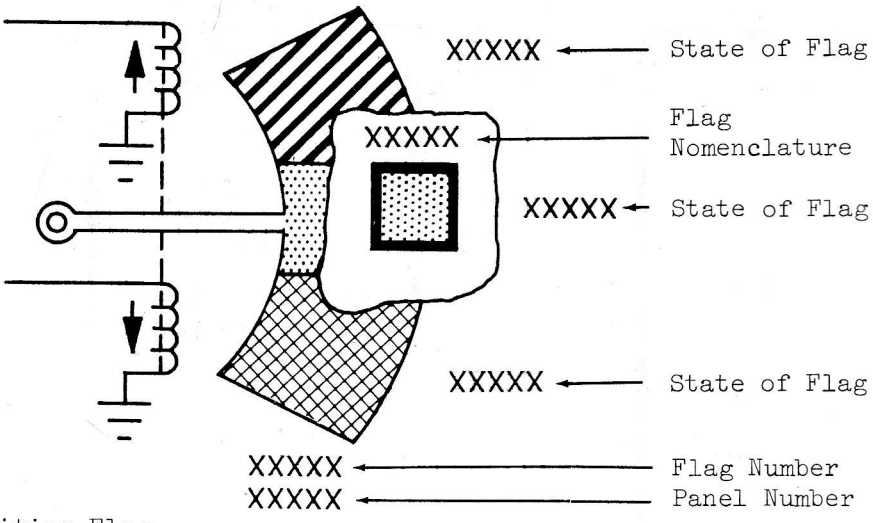

Two-Position Flag

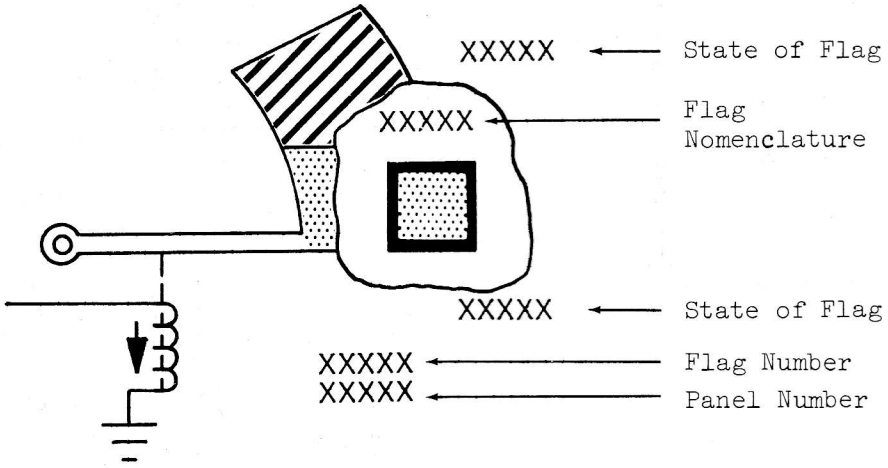

Annunciator Flag

Flag symbol will not reflect switch position of the associated switch.

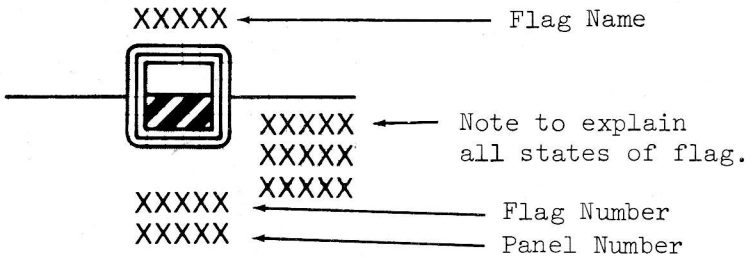

TABLE 1-II.- DRAWING SYMBOL STANDARDS (CONTINUED)

8. MISCELLANEOUS SYMBOLS

Telemetry Bubble (LM Only)

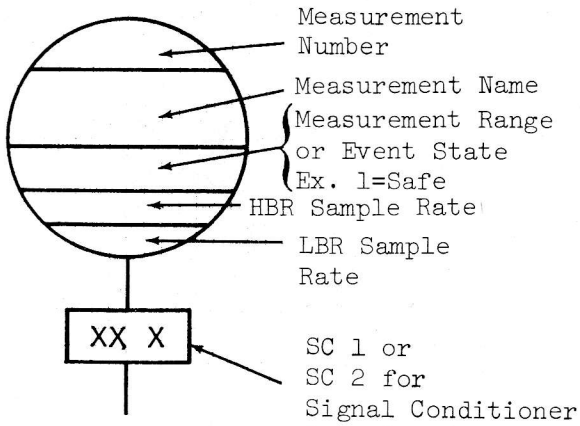

Measurements to GSE

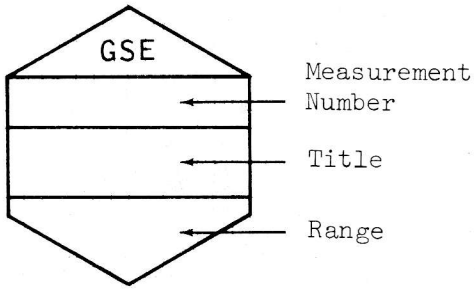

Wire Resolver

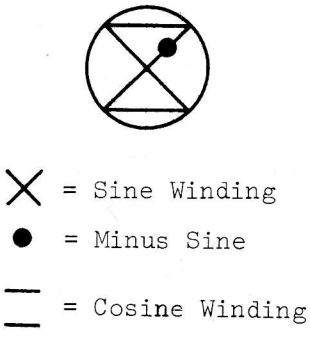

Transformers

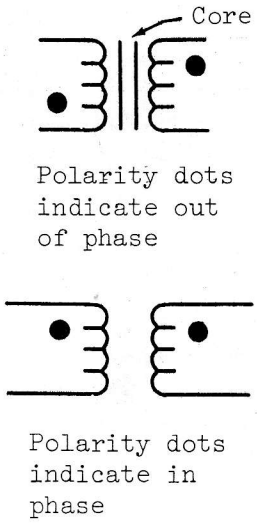

Amplifier

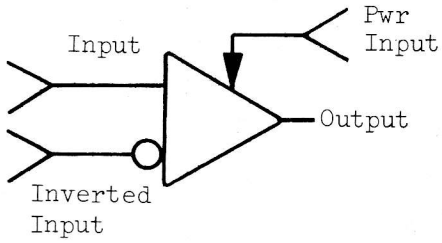

Antenna

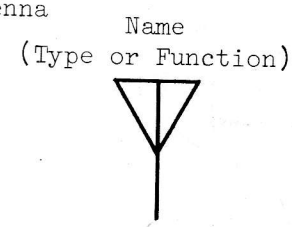

Heater

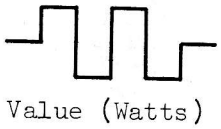

Overview Instrumentation Legend

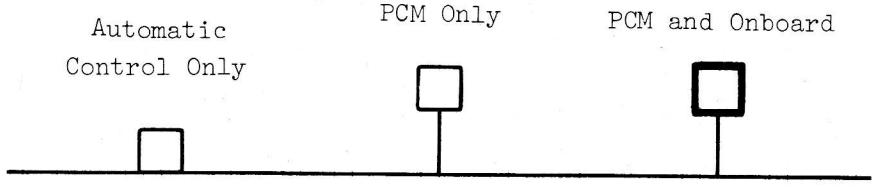

TABLE 1-II.- DRAWING SYMBOL STANDARDS (CONCLUDED)

8. MISCELLANEOUS SYMBOLS (CONT.)

And Gate

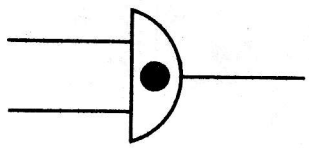

Nand Gate

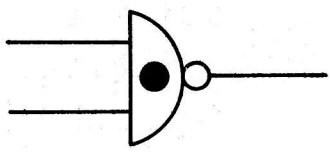

Or Gate

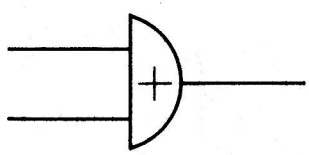

Nor Gate

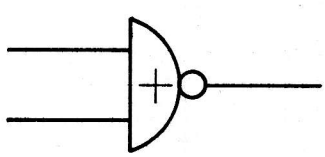

Exclusive Or Gate

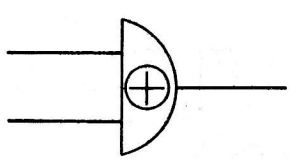

LTR	DR	ENGR	DATE	APPROVAL

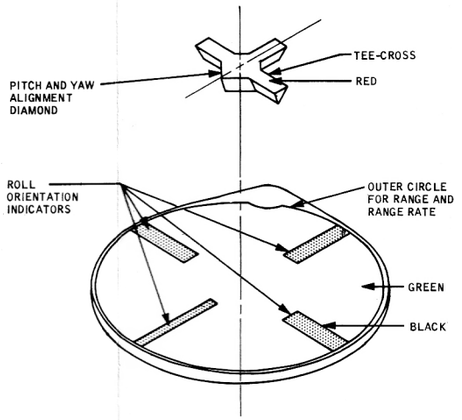

PERSPECTIVE OF LM: ACTIVE CSM (3-D) DOCKING ALIGNMENT TARGET

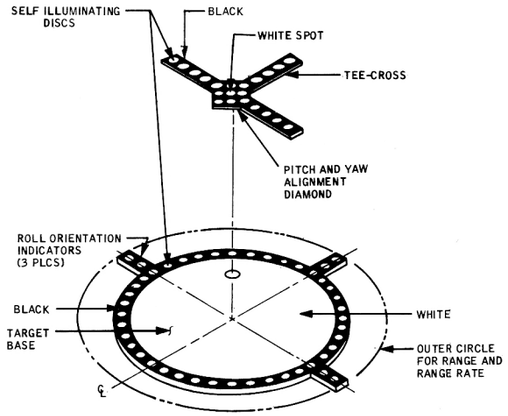

PERSPECTIVE OF LM MOUNTED CSM ACTIVE (3-D) DOCKING ALIGNMENT TARGET

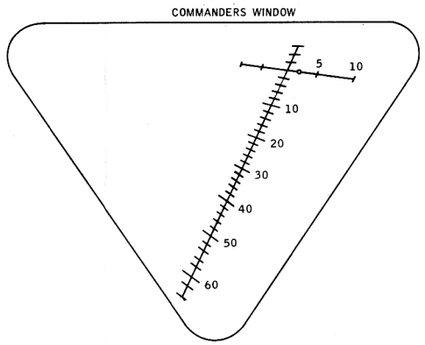

LANDING POINT DESIGNATOR

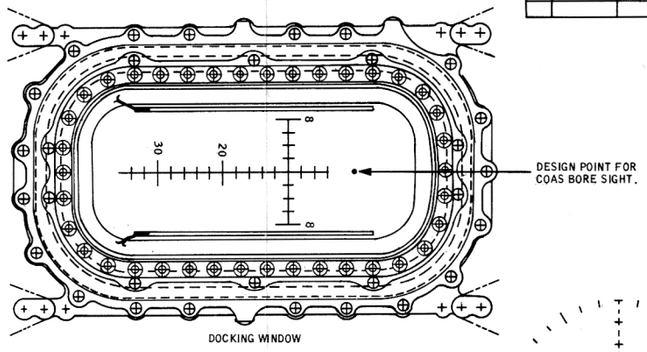

DOCKING WINDOW

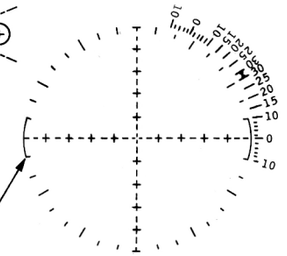

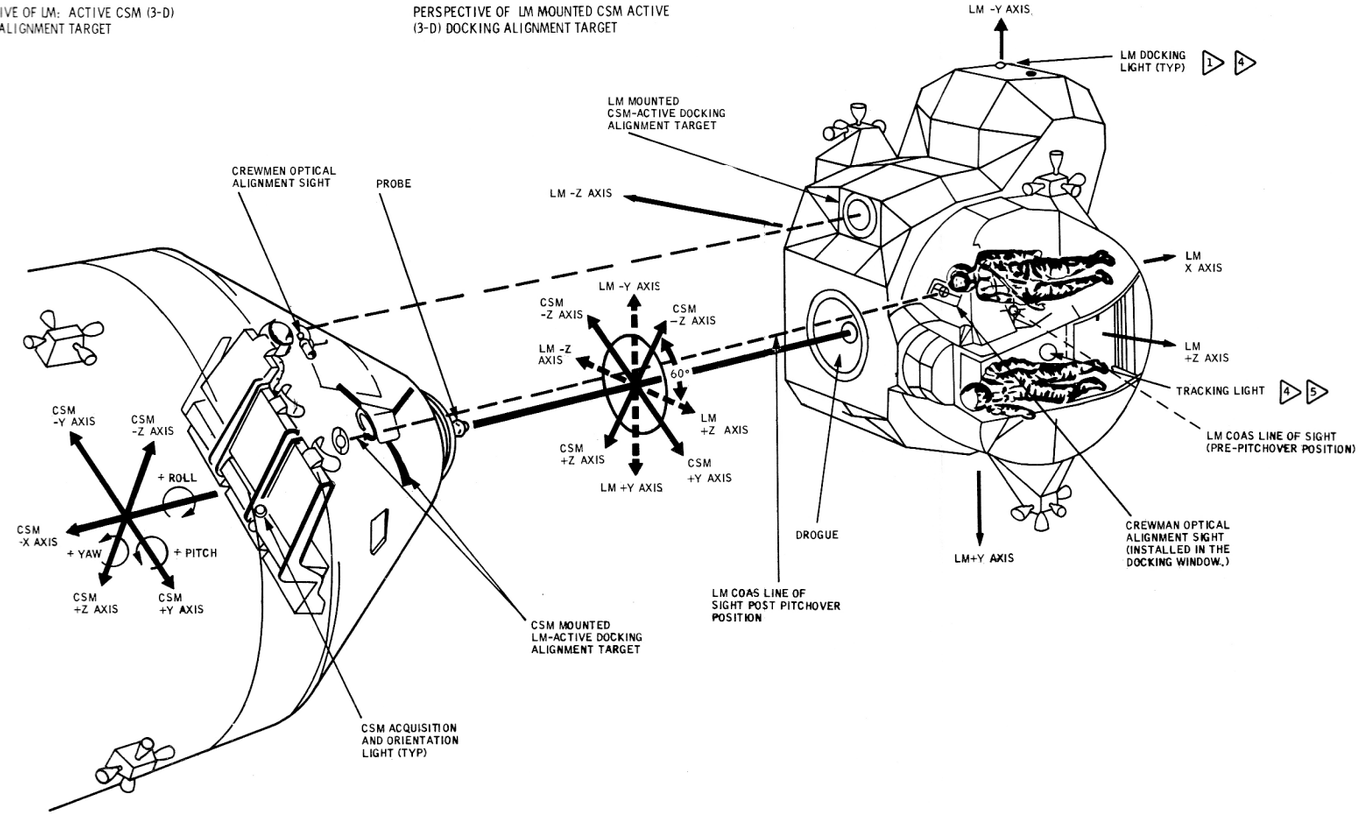

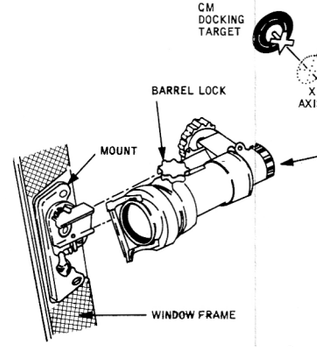

CREWMAN OPTICAL ALIGNMENT SIGHT (COAS) 3

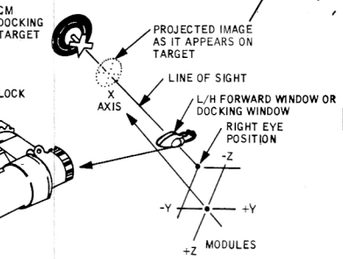

RECTICLE PATTERN AND ELEVATION SCALE

5 TRACKING LIGHT FLASHES AT 1 FLASH PER SEC FOR A DURATION OF 20 MILLISECONDS THROUGH AN ANGLE OF 60° SOLID ILLUMINATION

4 FUNCTIONAL SCHEMATIC FOR TRACKING AND DOCKING LIGHT REF $^{J}Z^{8}_{3.1}$ $^{Q}Z^{5}_{3.1}$

3 LIGHTING FOR COAS REF $^{Q}Z^{5}_{3.1}$

2 COAS CAN BE MOUNTED IN DOCKING WINDOW OR CMDR'S L/H FORWARD WINDOW

NOTES: 1 DOCKING LIGHT COLORS ARE:
STARBOARD (RIGHT) SIDE: GREEN
PORT (LEFT) SIDE: RED
AFT TOP: 1 WHITE
FORWARD FACE: 1 WHITE, 1 YELLOW
DOCKING LIGHT LOCATION SHOWN ON STRUCTURES DWG 2.2

SIGNATURES		DATE
DR	M. Arnold	3/21/68
DSGN	L. F. Benoit	3-27-68
QC		4-4-68
ENGR		3/27/68
APP	Donald F. Hudson	4/3/68
FEC	Dean D. Baker	4/4/68
AUTH	Don Bragg	4-8-68

NATIONAL AERONAUTICS & SPACE ADMINISTRATION
MANNED SPACECRAFT CENTER · HOUSTON, TEXAS

DOCKING AND EVA AIDS

LM	SIZE	DWG NO.
LM-3	J	FIGURE 2-1
38.5 X 21	PAGE 2-1	SHEET 1 OF 1

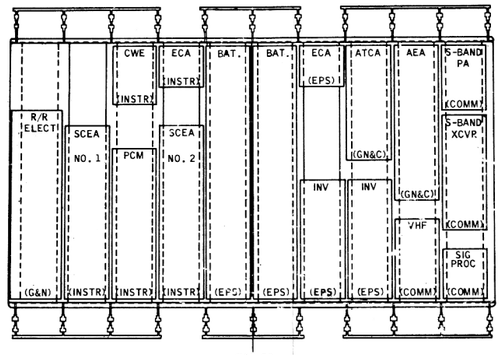

AFT EQUIPMENT BAY COLD PLATE AND ERA ARRANGEMENT

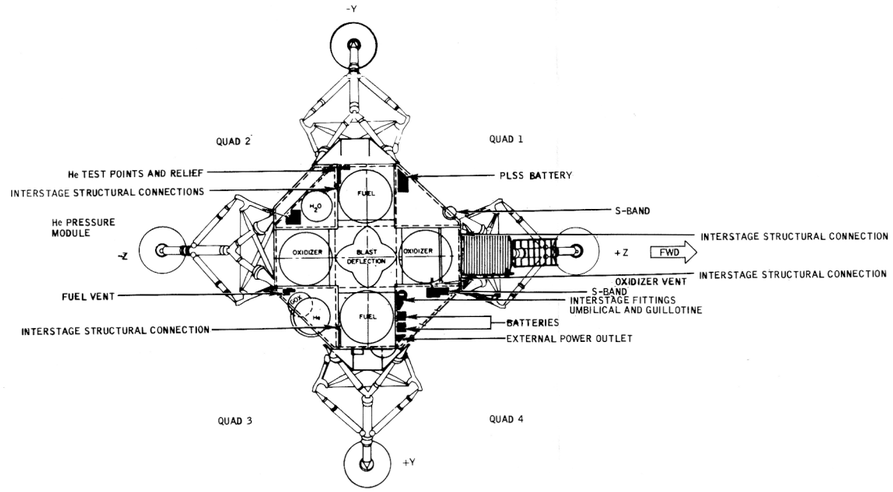

DESCENT STAGE PLAN VIEW

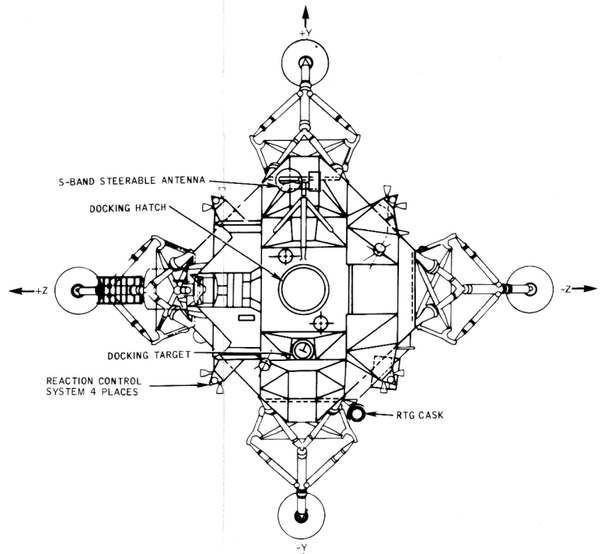

VIEW LOOKING DOWN

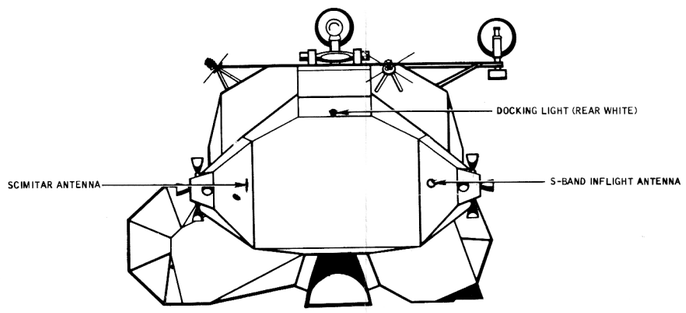

ASCENT STAGE AFT EQUIPMENT BAY

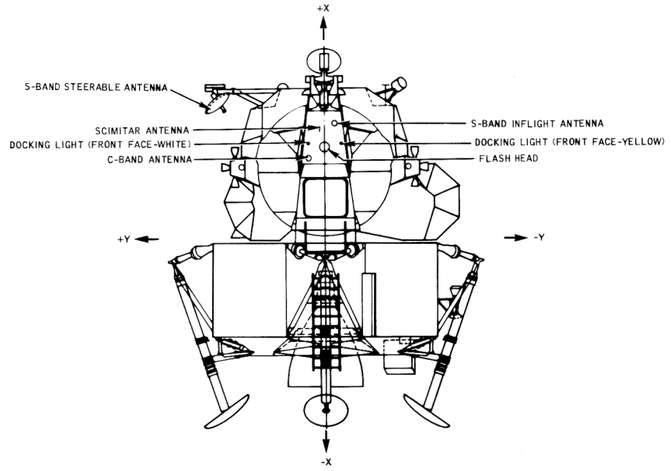

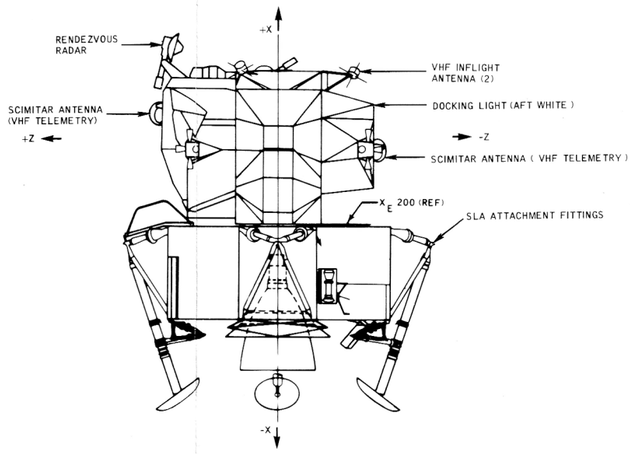

SIGNATURES	DATE
DR D. OLSON	9/26/67
DSGN L. P. Duval	9-2-68
QC Luther D. Taylor	9-4-68
ENGR P. D. Lien	9/2/68
APP Donald K. Slayton	9/3/68
FEC Robert B. Poole	9/4/68
AUTH Don Bray	9-8-68

NATIONAL AERONAUTICS & SPACE ADMINISTRATION
MANNED SPACECRAFT CENTER · HOUSTON, TEXAS

LM EXTERIOR

LM	SIZE	DWG NO.
LM-3	E	FIGURE 2-2
44 X 26	PAGE 2-2	SHEET 1 OF 1

LTR	DR	ENGR	DATE	APPROVAL

MSC Form 1816 E (REV OCT 65)

LTR	DR	ENGR	DATE	APPROVED

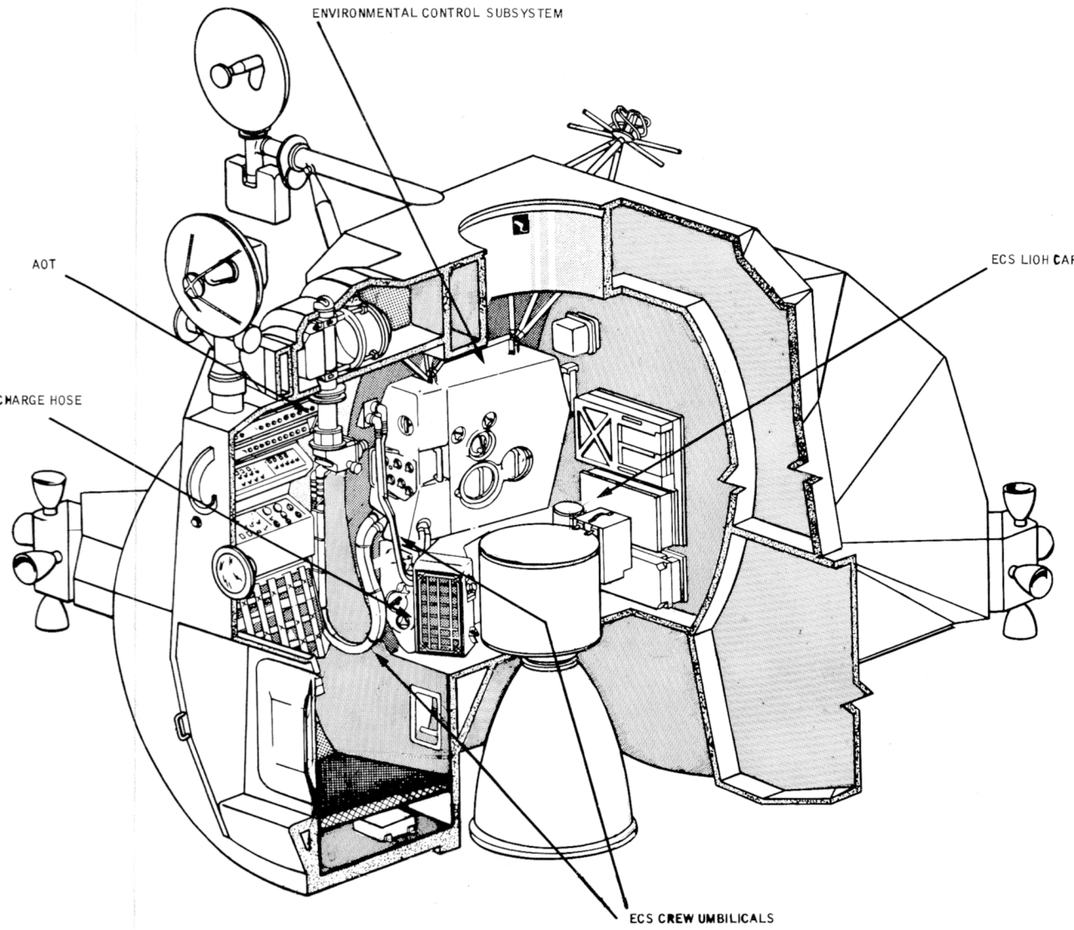

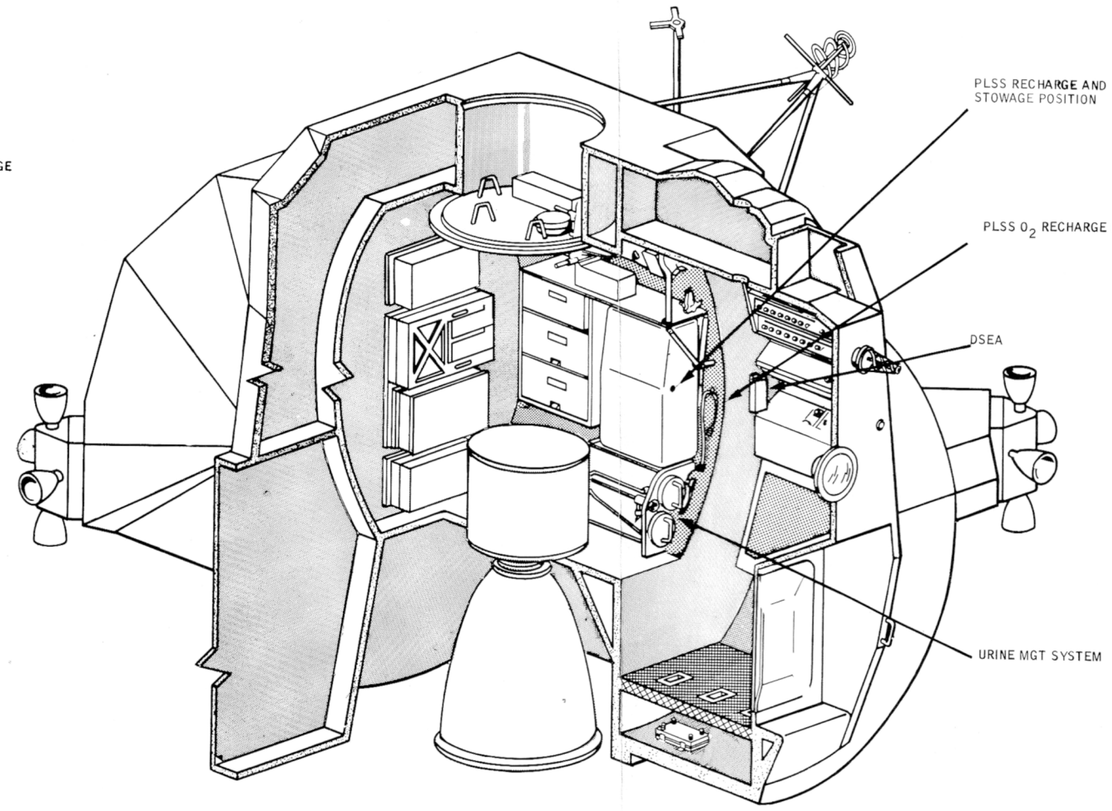

NOTE: OPS LOCATION AND STOWAGE PROVISIONS TO BE ADDED LATER

SIGNATURES		DATE
DR	M. JENKING	10/10/67
DSGN	A. P. Brush	4-1-68
QC	Betty M. Hayes	4-4-68
ENGR	[illegible]	4/1/68
APP	[illegible]	4/3/68
FEC	[illegible]	4/4/68
AUTH	[illegible]	4-8-68

NATIONAL AERONAUTICS & SPACE ADMINISTRATION
MANNED SPACECRAFT CENTER • HOUSTON, TEXAS

LM CABIN INTERIOR

LM	SIZE	DWG NO.
LM-3	D	FIGURE 2-3
33 X 21.25	PAGE 2-3	SHEET 1 OF 1

LTR	DR	ENGR	DATE	APPROVAL

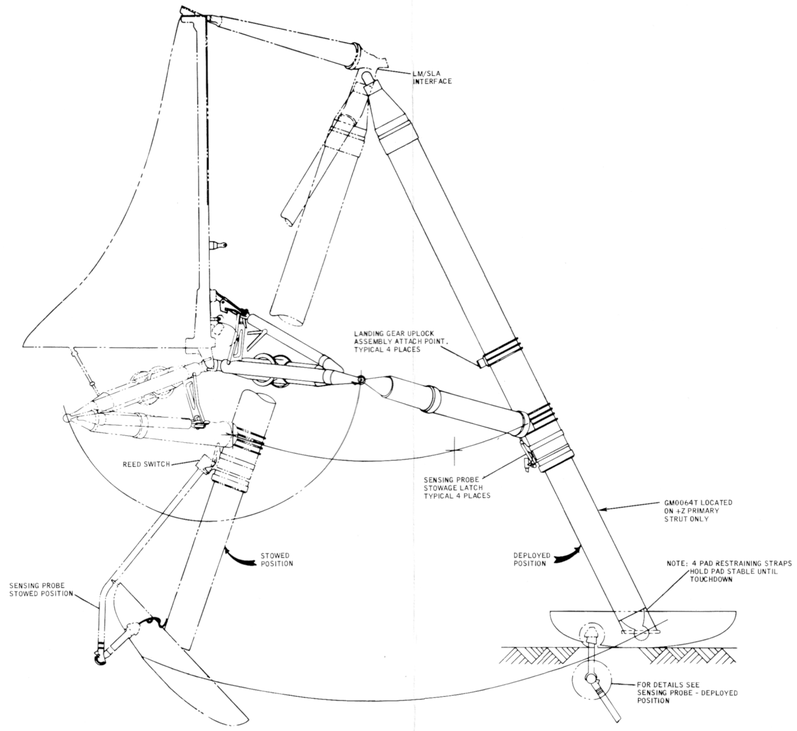

LM LANDING GEAR
TYPICAL 4 PLACES

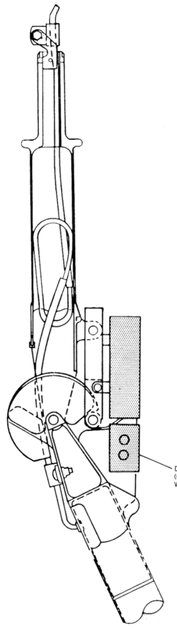

LUNAR SURFACE SENSING PROBE
(TYP 4 PLACES) (DEPLOYED POSITION)
SENSING PROBE EXTENDS 53 IN BELOW BOTTOM SURFACE OF THE LANDING PAD

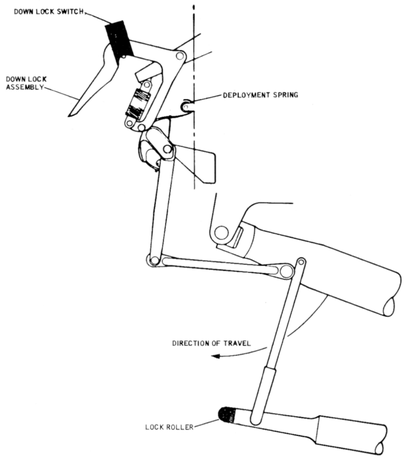

LANDING GEAR LOCK
STOWED POSITION

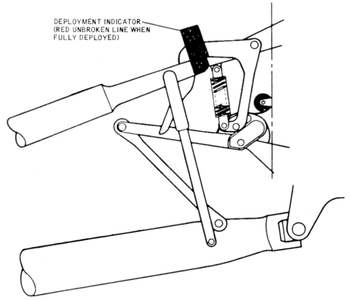

LANDING GEAR LOCK
DOWN AND LOCKED POSITION
TYPICAL 8 PLACES,
2 ON EACH LEG

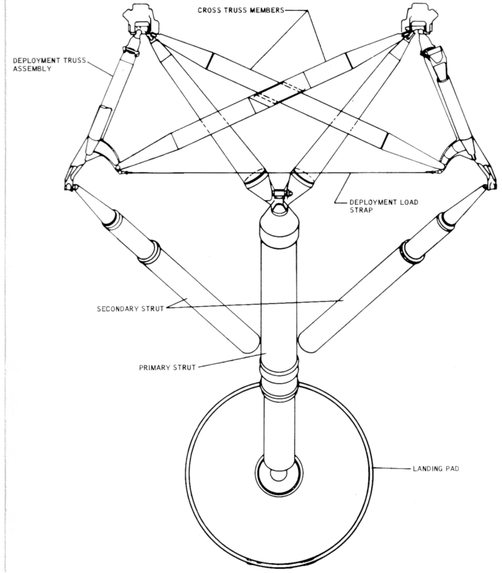

SIGNATURES	DATE
DR Donald F. Heinz	12/12
DSCN A. H. Bond	12/12
QC Billy D. Hyde	12/12
ENGR T. H. Tarr	12/12
APP Donald F. Heinz	12/12
F/C W. Brooks	12/12
AUTH R. L. Ferris	12/12

NATIONAL AERONAUTICS & SPACE ADMINISTRATION
MANNED SPACECRAFT CENTER · HOUSTON, TEXAS

LM LANDING GEAR

LM	SIZE	DWG NO.
LM-3	J	FIGURE 2-4
60.5 X 25.5	PAGE 2-4	SHEET 1 OF 1

3 CREW SYSTEMS

LTR	DR	ENGR	DATE	APPROVAL

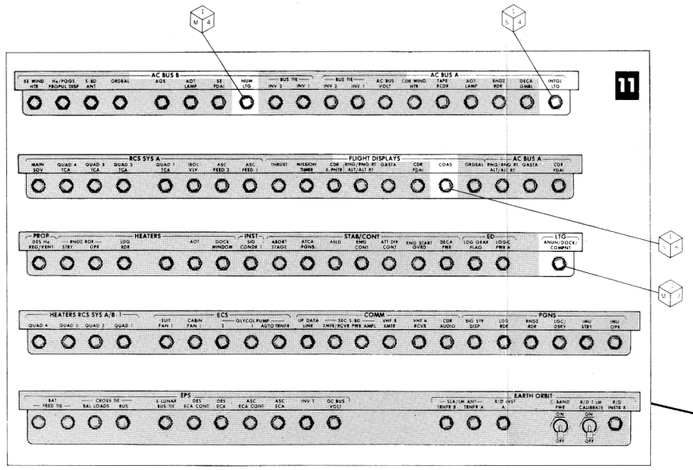

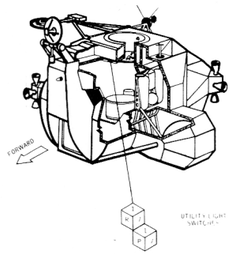

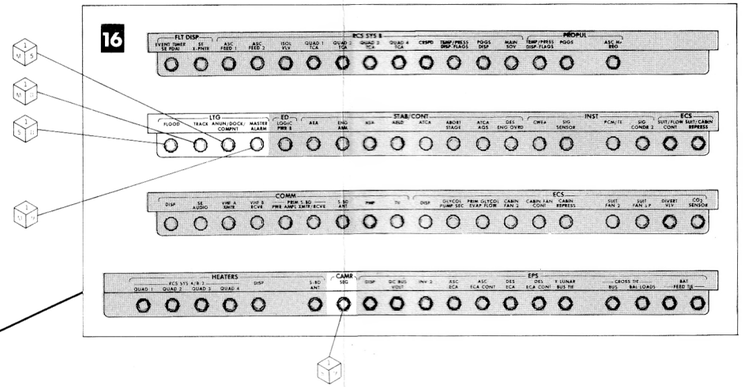

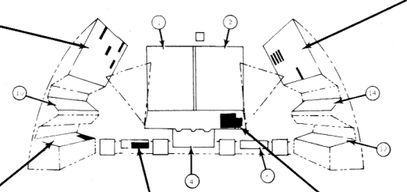

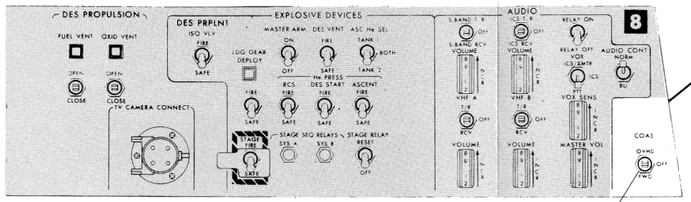

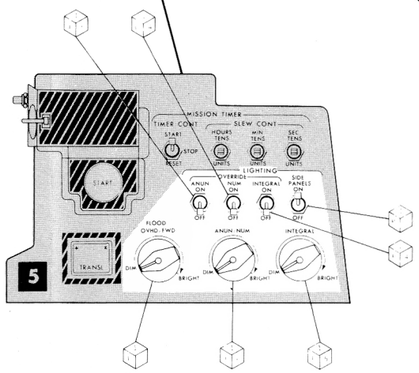

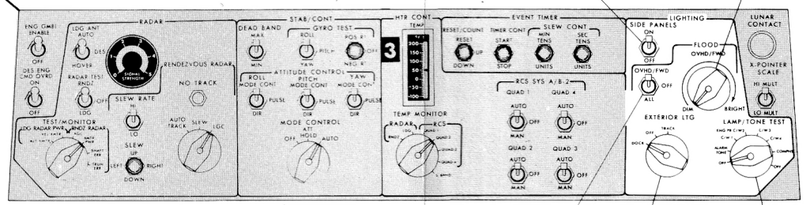

NATIONAL AERONAUTICS & SPACE ADMINISTRATION MANNED SPACECRAFT CENTER — HOUSTON, TEXAS		SIGNATURES	DATE
LIGHTING CONTROL / DISPLAY		DR	
		DSGN	
		CC	
		ENGR	
		APP	
DWG NO. FIGURE 3-1	SIZE J	FEC	
	LM LM-3	CALTH	
SHEET	PAGE		

1 LIGHTING

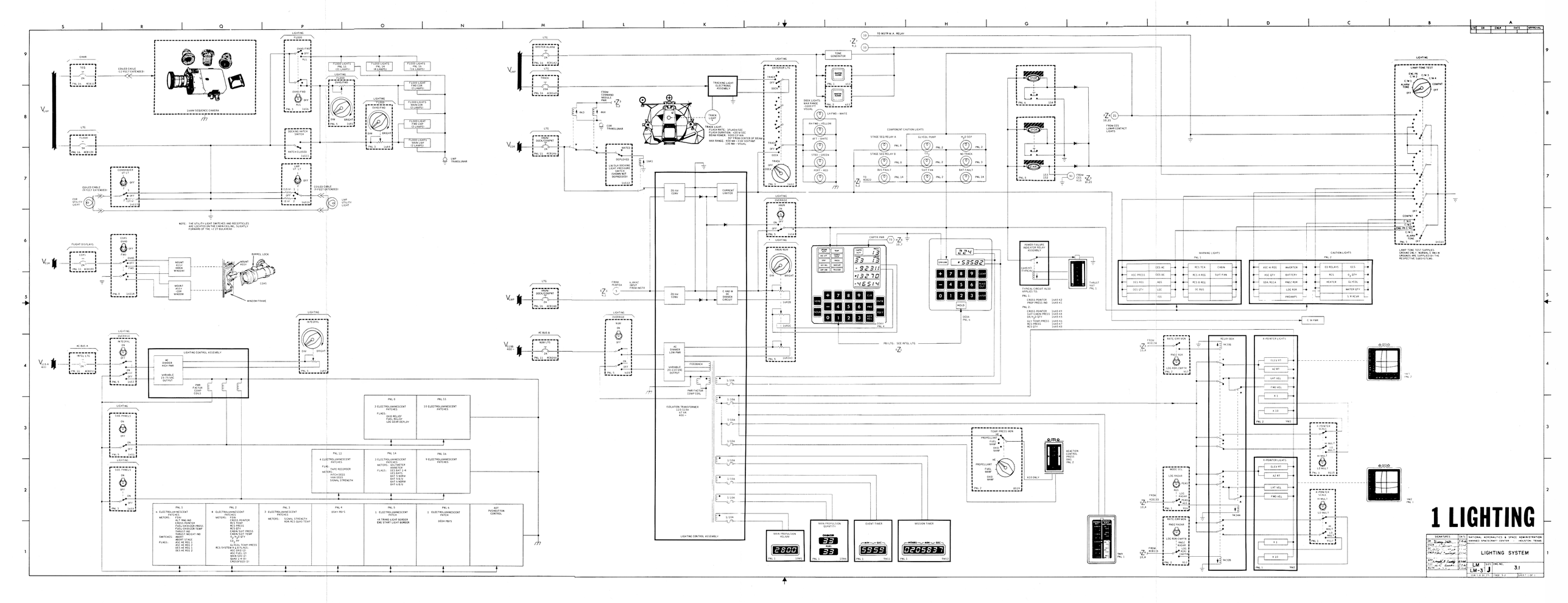

LTR	DR	ENGR	DATE	APPROVAL
A				

SIGNATURES	DATE	NATIONAL AERONAUTICS & SPACE ADMINISTRATION
CR Rockwell	2-14-69	MANNED SPACECRAFT CENTER HOUSTON, TEXAS
CHIEF, ENGR BRANCH	2-14-69	LIGHTING SYSTEM
ASST CHIEF, ENGR BRANCH	2-14-69	
CHIEF, ENGR DIVISION	2-14-69	

CONTRACT NO.	DRAWING NO.	SHEET NO.
NAS 9-150	LM LM-3 J	3.1

FORM 2-53 REV. 1-65	PAGE 3-2	SHEET 1 OF 1

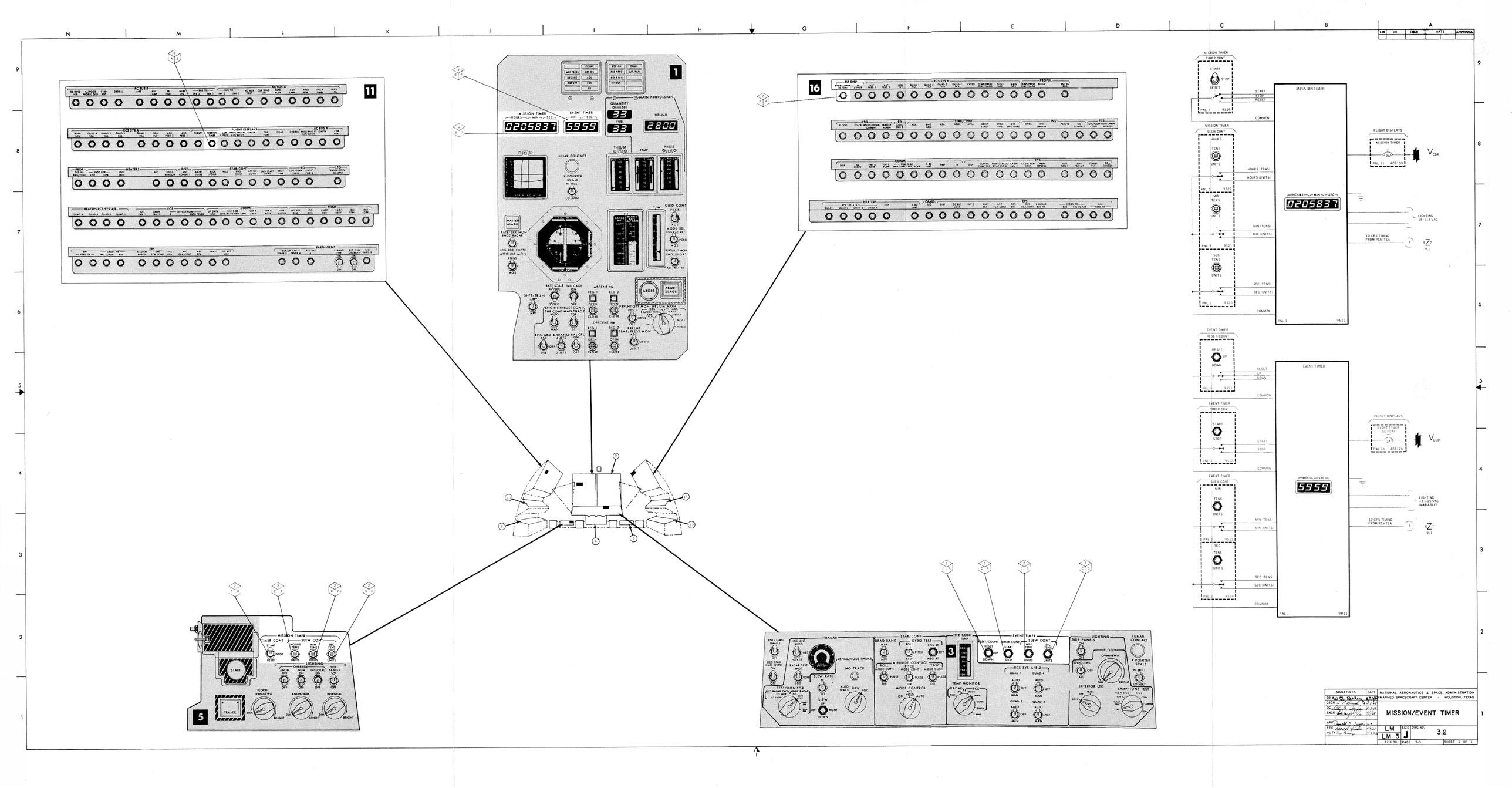

LTR	DR	ENGR	DATE	APPROVAL

SIGNATURES	DATE	NATIONAL AERONAUTICS & SPACE ADMINISTRATION
DR R. J. G. Baldwin	8-5-68	MANNED SPACECRAFT CENTER - HOUSTON, TEXAS
DSGN	8-5-68	
QC	8-5-68	MISSION/EVENT TIMER
ENGR	8-5-68	
APP	8-5-68	LM SIZE J DWG NO. 3.2
FEC	8-5-68	LM 3 77 X 30 PAGE 3-3 SHEET 1 OF 1
AUTH	8-5-68	

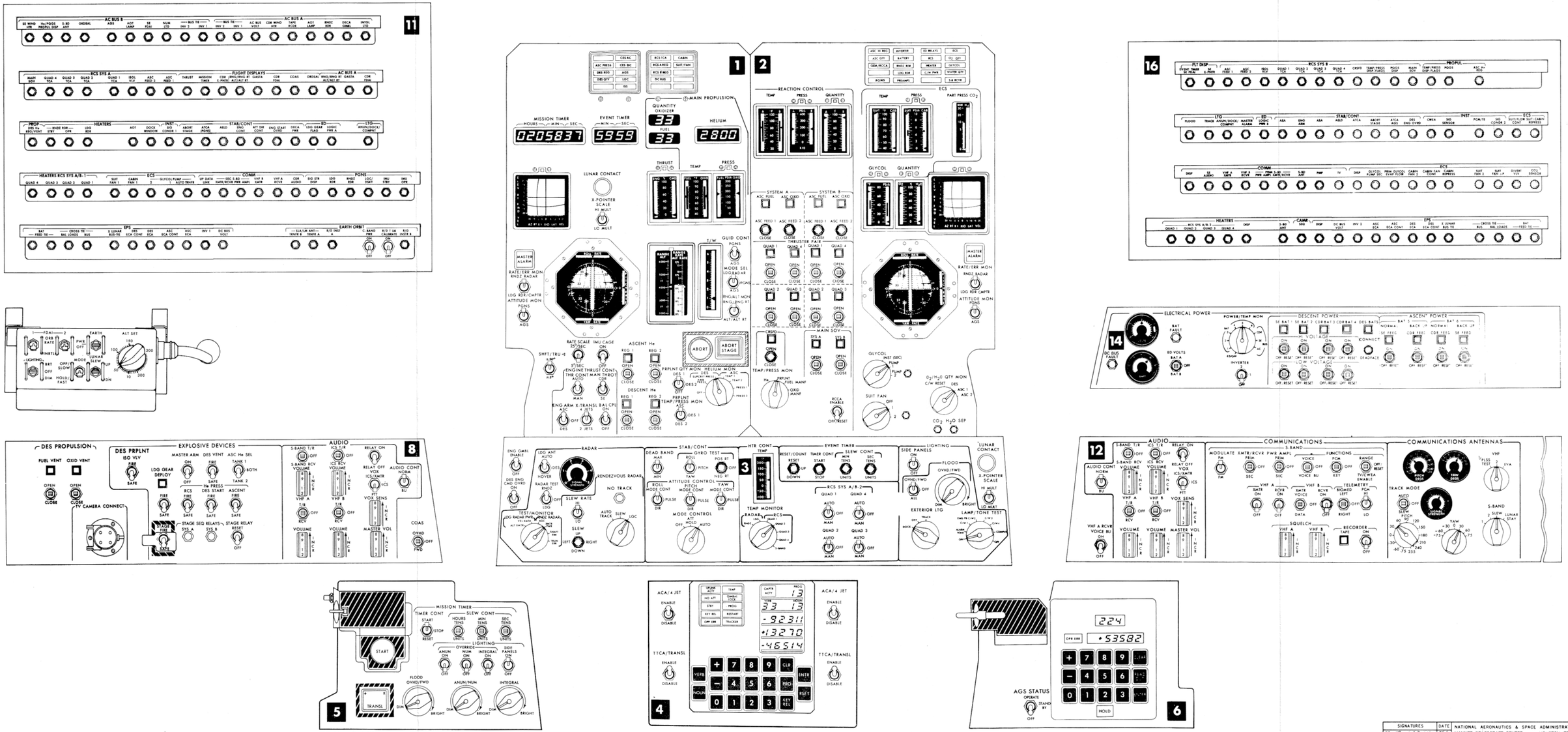

SIGNATURES	DATE	NATIONAL AERONAUTICS & SPACE ADMINISTRATION
DR		MANNED SPACECRAFT CENTER · HOUSTON, TEXAS
DSGN		LM-3
QC		CONTROL / DISPLAY
ENGR		
APP		LM SIZE J DWG NO. FIGURE 3-2
FEC		LM-3 66 X 34 PAGE 3-4 SHEET 1 OF 1
AUTH		

4 SEQUENTIAL AND PYROTECHNICS

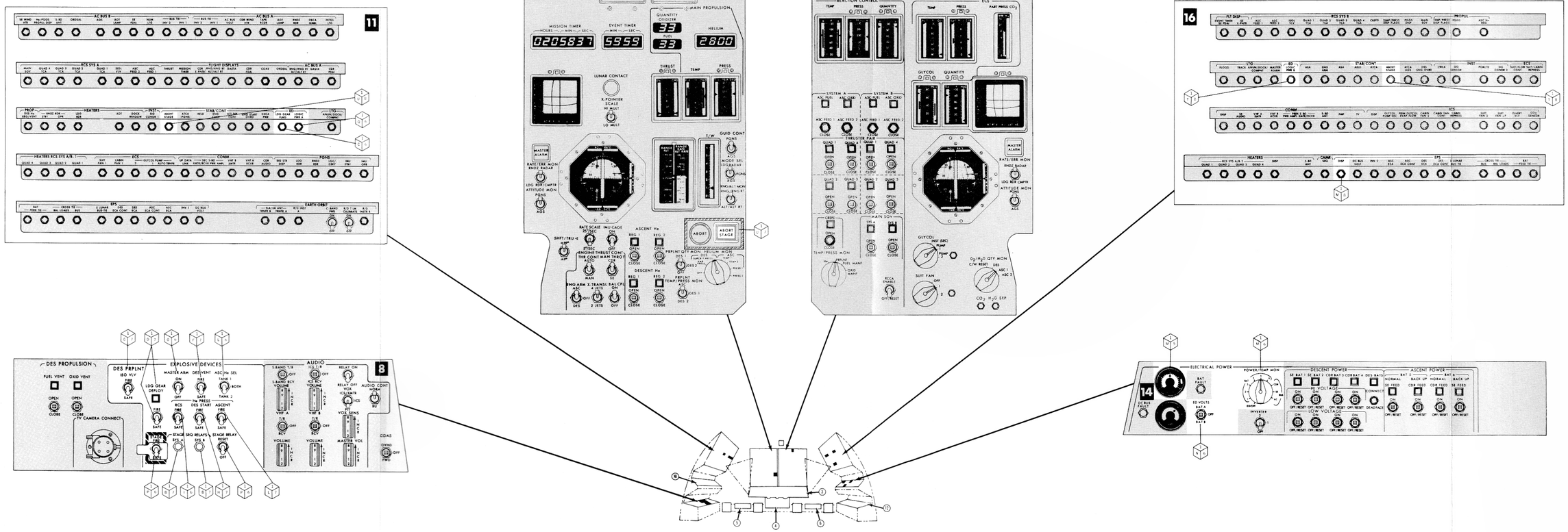

NATIONAL AERONAUTICS & SPACE ADMINISTRATION MANNED SPACECRAFT CENTER · HOUSTON, TEXAS	SIGNATURES	DATE
SEQUENTIAL AND PYROTECHNICS CONTROL/DISPLAY	ORIG: Frank T. Hardy	3/1/68
	DSGN: E. Bissell	3-1-68
	CC: Arthur D. Murphy	3-1-68
	ENGR: E. Bissell, E. Roberts	3-1-68
DWG NO. FIGURE 4-1	APP: Joseph F. Shea	3/1/68
SIZE J · LM LM-3	REL: Wm. A. Tindall, Jr.	3-1-68
SHEET 1 OF 1 · PAGE 4-1	AUTH: Don D. Arabian	3-1-68

SECTION 4 PYRO SYSTEM NOTES

1. THE LM PYRO ELECTRICAL SYSTEM IS A SHIELDED FLOATING GROUND SYSTEM.
2. THE PYRO SYSTEM HAS TWO 30 VOLT BATTERIES RATED AT 0.75 AMP HOURS, ONE FOR SYSTEM A AND ONE FOR SYSTEM B. PYRO BAT A IS LOCATED IN THE DESCENT STAGE, AND PYRO BAT B IS LOCATED IN THE ASCENT STAGE.
3. THE DESCENT WATER LINE AND ALL INTERSTAGE CABLES ARE ROUTED THROUGH THE INTERSTAGE CABLE CUTTER EXCEPT A FIVE FOOT DFI TM CABLE WHICH HAS A PULL-AWAY PLUG REQUIRING 50 TO 200 POUNDS FOR RELEASE. THE OXYGEN AND GLYCOL LINES HAVE QUICK DISCONNECTS AND ARE NOT PYROTECHNIC IN NATURE.
4. THE PROPULSION SYSTEMS (DPS, APS) WILL OPERATE PROPERLY FOR A SHORT TIME IN A PREPRESSURIZED BLOWDOWN MODE IF BOTH PYRO BUSES FAIL TO ARM. THE APPROXIMATE TIMES ARE:

DPS - 17 SEC AT A 10% THRUST LEVEL
APS - 6 SEC

THE RCS SYSTEM WILL NOT OPERATE IN A PREPRESSURIZED BLOWDOWN MODE.

TABLE 4-I

PYROTECHNIC FUNCTIONS AND COMPONENTS

NO.	FUNCTION	COMPONENTS	SYSTEM A INITIATORS	SYSTEM B INITIATORS	
1	STAGING				
	EXPLOSIVE NUTS	FOUR NUTS	0	4	ONE INITIATOR PER NUT OR BOLT
	EXPLOSIVE BOLTS	FOUR BOLTS	4	0	
	ELECTRICAL CIRCUIT INTERRUPTERS	THREE INTERRUPTERS	3	3	TWO INITIATORS PER INTERRUPTER, ONE FROM SYSTEM A AND ONE FROM SYSTEM B. ONE INITIATOR CAN OPERATE THE INTERRUPTER.
	CABLE CUTTER	ONE CUTTER	1	1	TWO OPPOSING BLADES, ONE POWERED BY SYSTEM A AND ONE POWERED BY SYSTEM B, TWO TUBES INTERCONNECT THE CHARGES BEHIND EACH BLADE SUCH THAT ONE INITIATOR CAN FIRE BOTH CHARGES BEHIND BOTH BLADES. ONE BLADE CAN SEVER THE INTERSTAGE UMBILICAL.
2	RCS HE PRESSURIZE				
	RCS SYSTEM A	TWO VALVES IN PARALLEL	1	1	VALVES ARE THE SINGLE INITIATOR TYPE PLACED IN PARALLEL, ONE VALVE WILL PRESSURIZE THE SYSTEM.
	RCS SYSTEM B	TWO VALVES IN PARALLEL	1	1	
3	DESCENT ENGINE PRESSURIZE				
	CRYOGENIC HE, PRESS	ONE VALVE	1	1	VALVE IS DUAL INITIATOR TYPE, ONE POWERED FROM SYSTEM A AND ONE FROM SYSTEM B. ONE INITIATOR WILL OPERATE THE VALVE.
	AMB HE PRESS	ONE VALVE	1	1	
	OX ISOLATION VALVE	ONE VALVE	1	1	
	FUEL ISOLATION VALVE	ONE VALVE	1	1	
	FUEL VENT VALVE	ONE VALVE	1	1	
	OX VENT VALVE	ONE VALVE	1	1	
4	ASCENT ENGINE PRESSURIZE				
	HE PRESS TANK 1	ONE VALVE	1	1	
	HE PRESS TANK 2	ONE VALVE	1	1	
	OX ISOLATION VALVES	TWO VALVES IN PARALLEL	1	1	VALVES ARE DUAL INITIATOR TYPE WITH ONE PORT PLUGGED. WITH THE VALVES IN PARALLEL, ONE IS POWERED FROM SYSTEM A AND THE OTHER IS POWERED FROM SYSTEM B. ONE VALVE WILL PRESSURIZE THE SYSTEM.
	FUEL ISOLATION VALVES	TWO VALVES IN PARALLEL	1	1	

TABLE 4-II

DESCENT STAGE FUNCTIONS LOST AT STAGING

ALL INTERSTAGE CURRENT CARRYING CABLES AND ALL INTERSTAGE CABLES WHICH WOULD AFFECT THE ASCENT STAGE BY BEING GROUNDED ARE ROUTED THROUGH THE INTERSTAGE ELECTRICAL CIRCUIT INTERRUPTERS AS FOLLOWS:

ELECTRICAL CIRCUIT INTERRUPTER NO 1 (P 174)

1. BAT 3 AND 4 POWER
* 2. ECA 1 AND 2 POWER
3. DESCENT ENGINE CONTROL ASSY (DECA)
4. GIMBAL DRIVE ACTUATORS (PITCH AND ROLL)
5. DESCENT ENGINE FUNCTIONS
6. PYROTECHNIC SYSTEM "A"
7. LUNAR PROBES

* POWER IN PARALLEL TO BOTH DESCENT ECA'S THROUGH ECI'S 1 AND 2

8. OPERATIONAL TELEMETRY

GC0201V	BAT 1 VOLT	GH1331V	AUTO THRUST CMD
GC0202V	BAT 2 VOLT	GH1348X	DPS ARM
GC0203V	BAT 3 VOLT	GL9003U	P TRM FAIL *RCCA A
GC0204V	BAT 4 VOLT	GL9004U	R TRM FAIL *RCCA B
GC1201C	BAT 1 CUR	GM0064T	LAND GEAR TEMP
GC1202C	BAT 2 CUR	GM5000U	LAND GEAR DEPLOY
GC1203C	BAT 3 CUR	GN7521X	LR RANGE BAD
GC1204C	BAT 4 CUR	GN7557X	LR VEL BAD
GC4361X	BAT 1 HI TAP	GN7563T	LR ANT TEMP
GC4362X	BAT 1 LOW TAP	GQ3018P	DPS HE REG PRESS
GC4363X	BAT 2 HI TAP	GQ3025P	DPS HE REG PRESS
GC4364X	BAT 2 LOW TAP	GQ3435P	DPS HE PRESS
GC4365X	BAT 3 HI TAP	GQ3603Q	DPS FUEL 1 QTY
GC4366X	BAT 3 LOW TAP	GQ3604Q	DPS FUEL 2 QTY
GC4367X	BAT 4 HI TAP	GQ3611P	DPS FUEL PRESS
GC4368X	BAT 4 LOW TAP	GQ4103Q	DPS OX 1 QTY
GC9961U	BAT 1 MAL	GQ4104Q	DPS OX 2 QTY
GC9962U	BAT 2 MAL	GQ4111P	DPS OX PRESS
GC9963U	BAT 3 MAL	GQ4455Q	DPS PROP LO
GC9964U	BAT 4 MAL	GY0201X	ED RLY A K1-K6
GF3584P	DES O_2 PRESS	GY0231X	ED RLY A K7-K15
GF4581P	DES H_2O QTY		
GH1301X	DPS ON		
GH1311V	MAN THRUST CMD		
GH1313V	PITCH GDA POS		
GH1314V	ROLL GDA POS		

ELECTRICAL CIRCUIT INTERRUPTER NO 2 (P 173)

1. BAT 1 AND 2 POWER
* 2. ECA 1 AND 2 POWER
3. SCIENTIFIC EQUIPMENT POWER SUPPLY
4. DESCENT ENGINE FUNCTIONS
5. SECONDARY LM/SLA ANTENNA TRANSFER RELAY
6. LANDING RADAR ELECTRICAL ASSY
7. DFI TELEMETRY
8. OPERATIONAL TELEMETRY

GQ3015P	DPS START TANK PRESS	GQ6510P	DPS TCP
GQ3718T	DPS FUEL 1 TEMP	GQ6806H	VAR INJ ACT POS
GQ3719T	DPS FUEL 2 TEMP	GQ7498U	DPS PROP VLVS A/B ΔP
GQ4218T	DPS OX 1 TEMP	GQ7499U	DPS PROP VLVS C/D ΔP
GQ4219T	DPS OX 2 TEMP		

ELECTRICAL CIRCUIT INTERRUPTER NO 3 (P 172)

1. PRIMARY LM/SLA ANTENNA TRANSFER RELAY
2. DFI TELEMETRY
3. OPERATIONAL TELEMETRY

GF3587T	DES O_2 TEMP

DWG 4.1
DETAIL SHEET 4.1.1

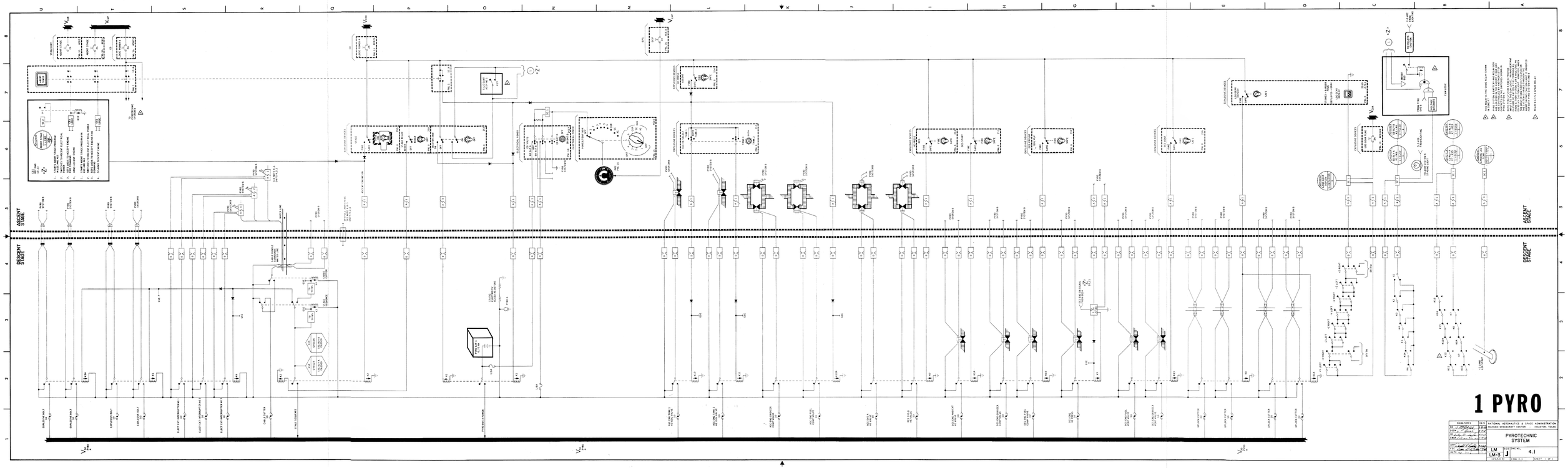
ASCENT STAGE
DESCENT STAGE
1 PYRO
PYROTECHNIC SYSTEM
NATIONAL AERONAUTICS & SPACE ADMINISTRATION
MANNED SPACECRAFT CENTER — HOUSTON, TEXAS
LM-3
4.1

LTR	DR	ENGR	DATE	APPROVAL

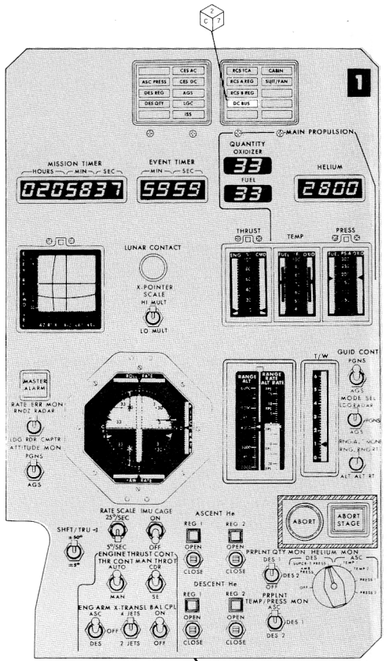

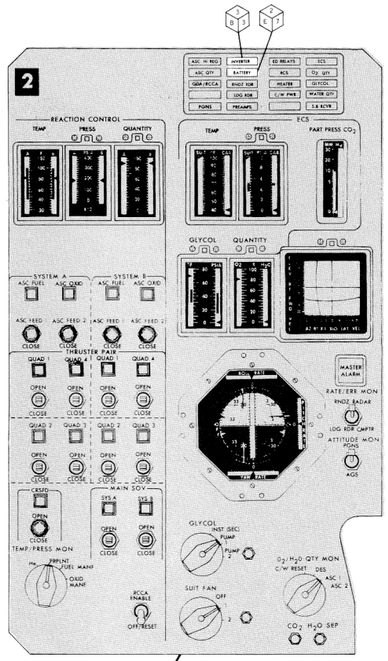

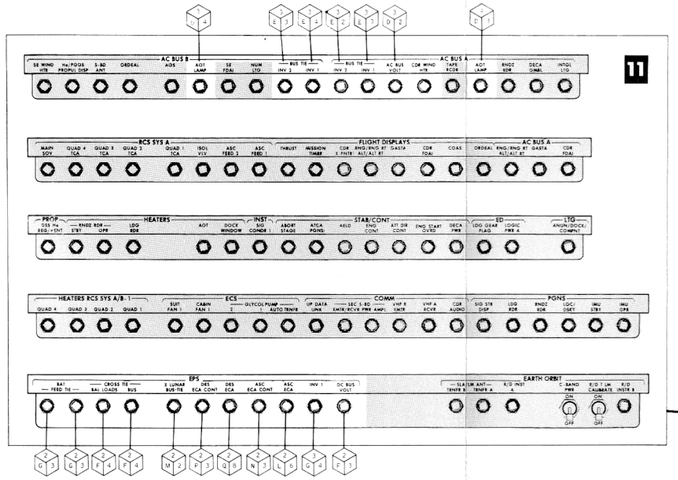

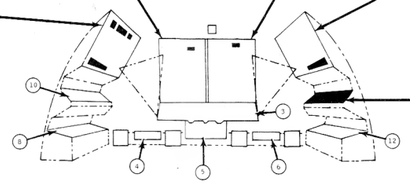

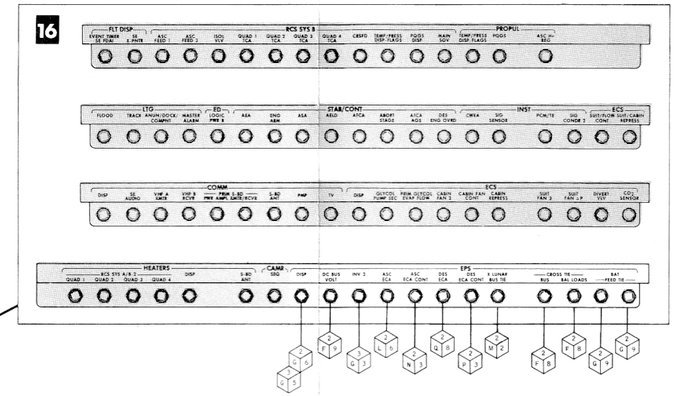

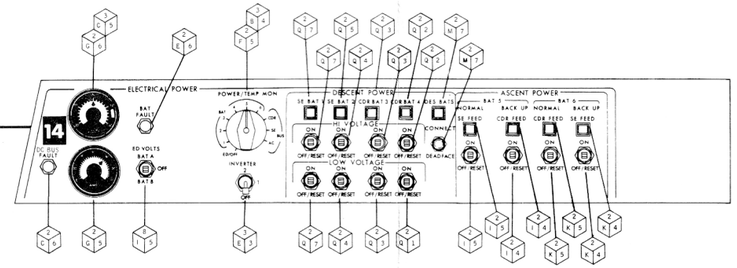

NATIONAL AERONAUTICS & SPACE ADMINISTRATION MANNED SPACECRAFT CENTER · HOUSTON, TEXAS	SIGNATURES	DATE
ELECTRICAL CONTROL DISPLAY	DR	
	DSGN	
	QC	
	ENGR	
	APP	
	FEC	
	AUTH	

DWG NO.	SIZE	
FIGURE 5-1	J	LM LM-3
SHEET 1 OF 1	PAGE 5-1	66 X 34

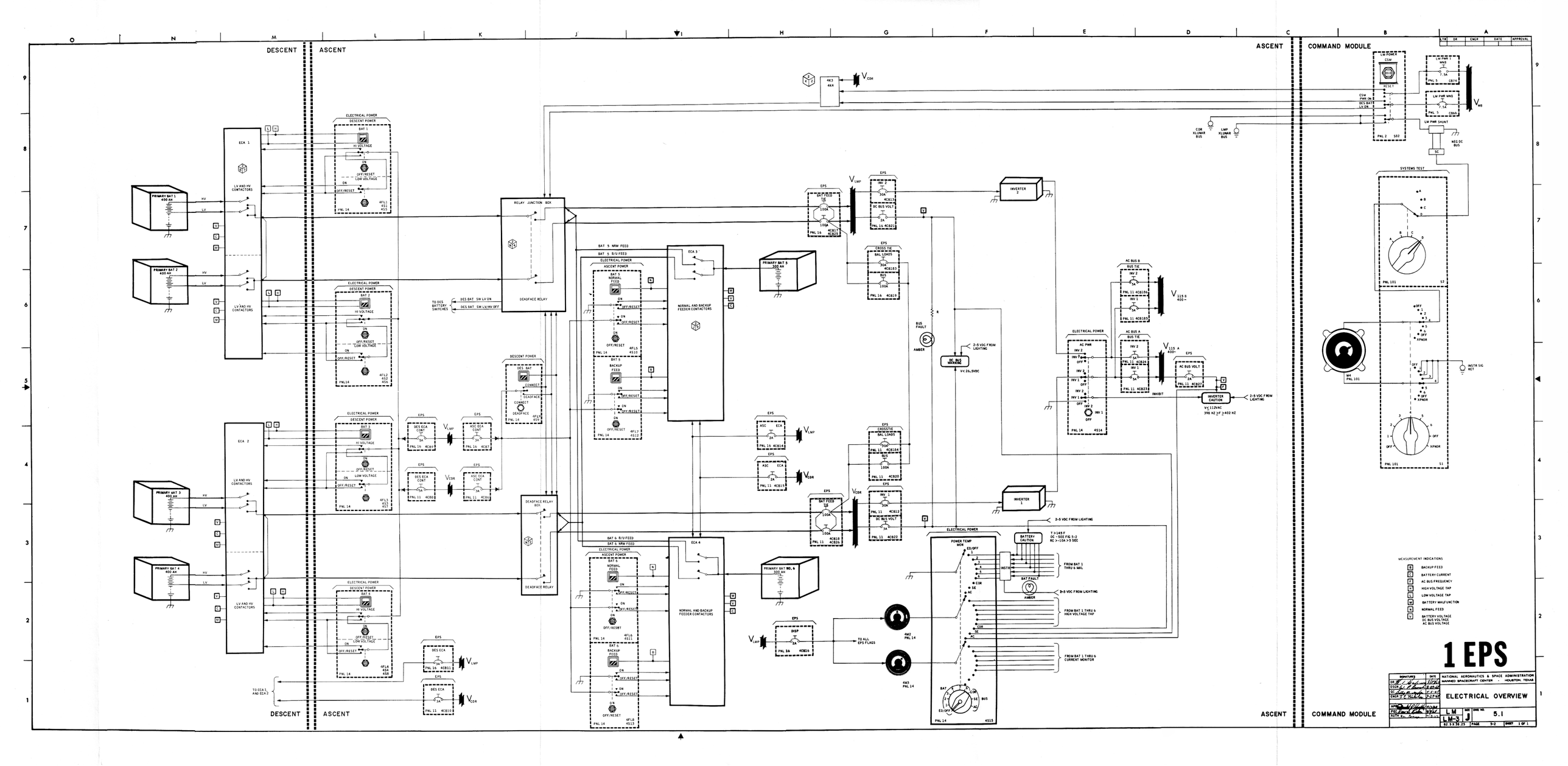
DESCENT
ASCENT
ASCENT
COMMAND MODULE
PRIMARY BAT 1 400 AH
PRIMARY BAT 2 400 AH
PRIMARY BAT 3 400 AH
PRIMARY BAT 4 400 AH
ECA 1
ECA 2
ECA 3
ECA 4
LV AND HV CONTACTORS
ELECTRICAL POWER DESCENT POWER
BAT 1 HI VOLTAGE OFF/RESET LOW VOLTAGE
BAT 2 HI VOLTAGE OFF/RESET LOW VOLTAGE
BAT 3 HI VOLTAGE LOW VOLTAGE OFF/RESET
BAT 4 HI VOLTAGE OFF/RESET LOW VOLTAGE
RELAY JUNCTION BOX
DEADFACE RELAY
DEADFACE RELAY BOX
TO DES BATTERY SWITCHES
DES BAT SW LV ON
DES BAT SW LV/HV OFF
DESCENT POWER
DES BAT CONNECT DEADFACE
ELECTRICAL POWER ASCENT POWER
BAT 5 NORMAL FEED
BAT 5 BACKUP FEED
BAT 6 NORMAL FEED
BAT 6 BACKUP FEED
OFF/RESET
NORMAL AND BACKUP FEEDER CONTACTORS
PRIMARY BAT 5 300 AH
PRIMARY BAT NO. 6 300 AH
BAT 5 NRM FEED
BAT 5 B/U FEED
BAT 6 B/U FEED
BAT 6 NRM FEED
EPS
DES ECA CONT
ASC ECA CONT
BAT FEED TIE
CROSSTIE BAL LOADS
DC BUS VOLT
DISP
BUS FAULT
AMBER
DC BUS WARNING
VC 26.5VDC
2-5 VDC FROM LIGHTING
INVERTER 1
INVERTER 2
INHIBIT
INVERTER CAUTION
VC 112VAC
398 HZ ≥ F ≥ 402 HZ
AC BUS A
AC BUS B
BUS TIE
AC BUS VOLT
AC PWR
POWER TEMP MON
BATTERY CAUTION
T > 145 F DC > 5SE FIG 3-2 RC > 10A > 5 SEC
BAT FAULT
FROM BAT 1 THRU 4 MAL
FROM BAT 1 THRU 6 HIGH VOLTAGE TAP
FROM BAT 1 THRU 6 CURRENT MONITOR
TO ALL EPS FLAGS
CSM
LM PWR
LM PWR MNB
LM PWR MNA
LM PWR SHUNT
NEG DC BUS
SYSTEMS TEST
INSTR SIG RET
COR XLINK BUS
LMP XLINK BUS
MEASUREMENT INDICATIONS
BACKUP FEED
BATTERY CURRENT
AC BUS FREQUENCY
HIGH VOLTAGE TAP
LOW VOLTAGE TAP
BATTERY MALF UNCTION
NORMAL FEED
BATTERY VOLTAGE DC BUS VOLTAGE AC BUS VOLTAGE
1 EPS
NATIONAL AERONAUTICS & SPACE ADMINISTRATION
MANNED SPACECRAFT CENTER — HOUSTON, TEXAS
ELECTRICAL OVERVIEW
LM
LMS
J
5.1
PAGE 3-2
SHEET 1 OF 1

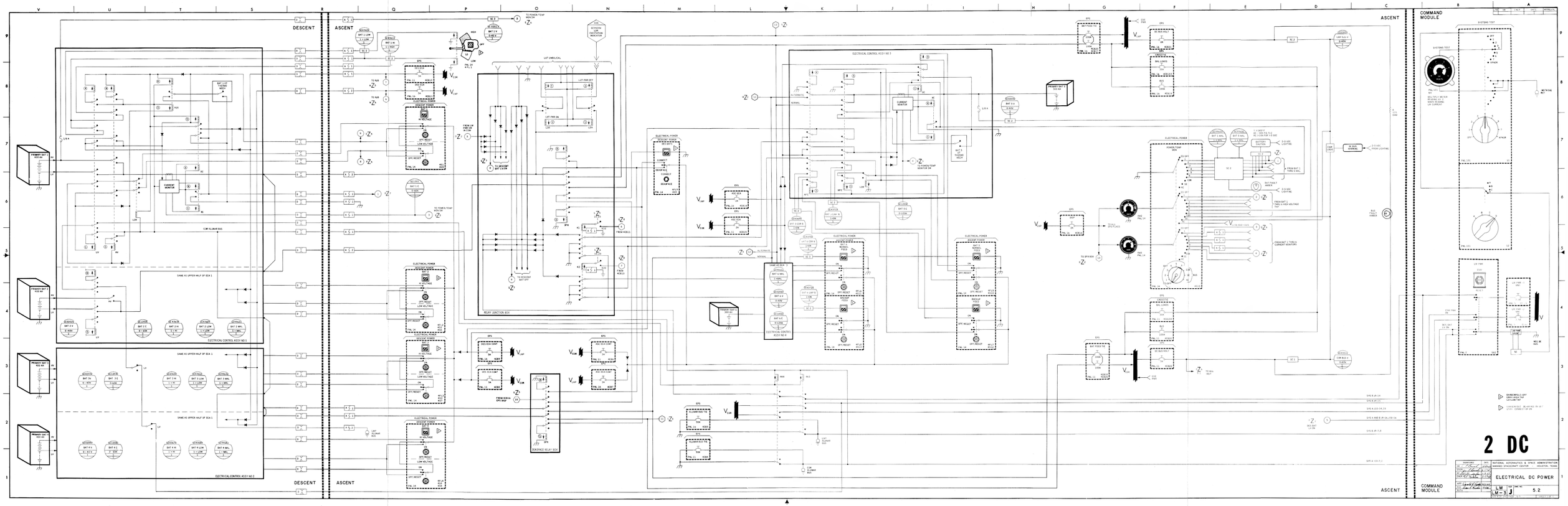
DESCENT
ASCENT
ELECTRICAL CONTROL ASSY NO 3
ELECTRICAL CONTROL ASSY NO 2
SAME AS UPPER HALF OF ECA 1
PRIMARY BAT 1 400 AH
PRIMARY BAT 2 400 AH
PRIMARY BAT 3 400 AH
PRIMARY BAT 4 400 AH
CSM XLINKAR BUS
LUNAR MODULE
RELAY JUNCTION BOX
ELECTRICAL POWER
DESCENT POWER BAT B
DESCENT POWER BAT C
DESCENT POWER BAT D
DESCENT POWER BAT E
IN VOLTAGE
LOW VOLTAGE
OFF RESET
ON
SEQUENCE
CONNECT
REVERSE POLARITY
DPS SCA CONT
DPS
ASCENT POWER BAT A
ASCENT POWER BAT B
ELECTRICAL CONTROL ASSY NO 1
ELECTRICAL CONTROL ASSY NO 4
ASCENT POWER BAT C
ASCENT POWER BAT D
ASCENT POWER BAT E
ASCENT FEED TIE
DESCENT FEED TIE
CROSSOVER
NORMAL
ALTERNATE
CURRENT MONITOR
BAT A THERMO HEATER
BAT B THERMO HEATER
BAT C THERMO HEATER
BAT D THERMO HEATER
BAT E THERMO HEATER
PRIMARY BAT 1 400 AH
PRIMARY BAT 2 400 AH
PRIMARY BAT 3 400 AH
PRIMARY BAT 4 400 AH
ASCENT PROPELLANT
DESCENT PROPELLANT
RCS HELIUM
RCS PROPELLANT
LUNAR SURFACE
ABORT
ABORT STAGE
ENTRY
CSM/LM SEPARATION
DOCKING
LUNAR LIFTOFF
LUNAR TOUCHDOWN
LUNAR SURFACE
LUNAR LIFTOFF
LUNAR TOUCHDOWN
ABORT
ABORT STAGE
ENTRY
CSM/LM SEPARATION
DOCKING
COMMAND MODULE
SYSTEMS TEST
SYSTEMS TEST
MULTIPLY METER READING BY 5 WHEN TAKING CSM CURRENT
2 DC
ELECTRICAL DC POWER
NATIONAL AERONAUTICS & SPACE ADMINISTRATION
MANNED SPACECRAFT CENTER
HOUSTON, TEXAS
LM
LM-3
5.2

LTR	DR	ENGR	DATE		APPROVAL

GREEN BAND ON METER IS 112 - 118 VAC.

20 - 40 VDC SCALE IS 62.5 - 125 VAC (MULT DC READING BY 3.125 TO GET VAC)

4M2 PNL 14

ELECTRICAL POWER

POWER TEMP MON

BAT 1 2 3 4 5 6 CDR SE AC BUS ED/OFF

ED/OFF 1 2 3 4 5 6 BAT

CDR SE AC BUS

PNL 14 4S15

EPS

V_{LMP}

DISPLAY 2A

PNL 16 4CB16

EPS

V_{CDR}

INV 1 30A

PNL 11 4CB12

6.4 KPPS SYNCH FROM INSTR E 8 9,1 15

INV 1

ELECTRICAL POWER

AC POWER

INV 2 INV 1 OFF

AC BUS B

BUS TIE

INV 1 5A

PNL 11 4CB185

INV 2 5A

PNL 11 4CB186

V_{115B} 400~

AC BUS B

AOT LAMP 2A

PNL 11 4CB214

TO AOT LAMP 3

TO AC BUS B LOADS

EPS

V_{LMP}

INV 2 30A

PNL16 4CB13

6.4 KPPS SYNCH FROM INSTR E 8 9,1 16

INV 2

INV 2 INV 1 OFF

AC BUS A

BUS TIE

INV 1 5A

PNL 11 4CB23

INV 2 5A

PNL 11 4CB24

V_{115A} 400~

AC BUS A

AOT LAMP 2A

PNL 11 4CB212

AC BUS VOLTS 2A

PNL 11 4CB27

TO AC BUS A LOADS

INV 2 INV 1 OFF

INV 2 INV 1 OFF

PNL 14 4S14

INHIBIT

GC0155F AC BUS FREQ 380-420 HZ 1

GC0071V AC BUS VOLTS 0-125 V 1 1

SC 1

SC 1

C&W LOGIC

INVERTER CAUTION

2-5 V FROM LIGHTING

V ≤ 112 VAC
398 HZ ≥ F ≥ 402 HZ

3 THE AOT LAMP IS UNIQUE IN THAT IT CAN BE POWERED FROM EITHER AC BUS. THIS IS THE ONLY PIECE OF AC EQUIPMENT THAT IS POWERED THIS WAY.

2 THE DC INPUT GROUND AND AC OUTPUT GROUND ARE TIED TO TWO SEPARATE NEGATIVE BUSSES WHICH ARE BOTH TIED TO STRUCTURE GROUND.

1 INVERTER FREQ = 400 ± .4 HZ WITH SYNC FROM INSTR
= 400 ± 10 HZ WITHOUT SYNC FROM INSTR

3 AC

SIGNATURES	DATE
DR Vick F. Lipsitz	2/21/67
DSGN Don Allen	3-29-68
QC Bottelli	4-4-68
ENGR J.E. Nuckolls	3-29-68
APP	4/3/68
FEC	4-4-68
AUTH Don Swarz	4-8-68

NATIONAL AERONAUTICS & SPACE ADMINISTRATION
MANNED SPACECRAFT CENTER · HOUSTON, TEXAS

ELECTRICAL AC POWER

LM LM-3 | SIZE J | DWG NO. 5.3

38,5 X 21.25 | PAGE 5-4 | SHEET 1 OF 1

ELECTRICAL SYSTEM NOTES

1. ASCENT BATTERY CAPACITY
   300 AMP-HRS AT A TERMINAL VOLTAGE OF 28.0 TO 32.5 VDC

2. DESCENT BATTERY CAPACITY
   400 AMP-HRS AT A TERMINAL VOLTAGE OF 28.0 TO 32.5 VDC

3. AC BUS CHARACTERISTICS

VOLTAGE	115 ± 2.5 VAC
FREQUENCY	400 ±2 HZ ON EXTERNAL SYNC
	400 ±10 HZ ON INTERNAL SYNC

4. ONBOARD BATTERY CURRENT READINGS
   READ PANEL METER DIRECTLY WHEN MEASURING INDIVIDUAL ASCENT BATTERY CURRENTS. DIVIDE PANEL METER READING BY 2 WHEN MEASURING INDIVIDUAL DESCENT BATTERY CURRENTS.

5. MALFUNCTION INDICATION LIMITS

A.	OVER TEMPERATURE	>145° ± 5°F (RESETS AT 125° ± 5°F)
B.	OVER CURRENT	SEE FIGURE 5-2
C.	REVERSE CURRENT	>- 10 AMPS FOR MORE THAN 5 SECS (RESETS AT - 4 AMPS)

6. LIMITATION OF MALFUNCTION INDICATION
   A. A DESCENT BATTERY OVER TEMPERATURE WILL NOT INDICATE UNLESS THE BATTERY IS ON.
   B. AN ASCENT BATTERY OVER TEMPERATURE WILL NOT INDICATE UNLESS THE MAIN FEEDER RELAY IS CLOSED.
   C. WHEN THE ASCENT BATTERY IS ON BACK-UP FEED PATH, THE BATTERY WILL NOT BE AUTOMATICALLY REMOVED FROM THE LINE FOR AN OVERCURRENT BUT THE INDICATION WILL APPEAR ON THE BATTERY CAUTION LIGHT AND ON TELEMETRY.

*

TABLE 5-I.- LM SUBSYSTEM VOLTAGE REQUIREMENTS

Subsystem	Voltage Required DC	AC
COMMUNICATIONS	25 - 31.5 V	--
CREW PROVISIONS	20 - 32 V	115 ± 2.5 V
DISPLAYS	25 - 31.5 V	115 ± 2.5 V
ENVIRONMENTAL CONTROL	25 - 31.5 V	--
ELECTRICAL POWER	24 - 32 V	--
INSTRUMENTATION (EXCEPT CAUTION AND WARNING)	20 - 32 V	115 ± 2.5 V
CAUTION AND WARNING	18 - 32.5 V	--
DFI	24 - 32 V	--
PGNCS (EXCEPT THE FOLLOWING)	25 - 31.5 V	115 ± 2.5 V
(a) IMU STANDBY	22.5 - 32.5 V	--
(b) IMU OPERATE	26.0 - 32.5 V	--
(c) RADAR CDU'S	26.0 - 32.5 V	--
(d) LGC	25.0 - 32.0 V	--
(e) AOT	25.0 - 32.0 V	115 ± 2.5 V
PROPULSION		
(a) ASCENT ENGINE	21 - 32 V	--
(b) DESCENT ENGINE CONTROL ASSEMBLY	22 - 32.5 V	115 ± 2.5 V
(c) DESCENT ENGINE	20 - 32 V	--
REACTION CONTROL	24 - 32 V	--
STABILIZATION AND CONTROL	25 - 31.5 V	--
PYROTECHNIC (LOGIC POWER ONLY)	24 - 32 V	--

TABLE 5-II. - CIRCUIT BREAKERS

CIRCUIT BREAKER (4CB)	RATING (AMPS)	WIRE GAUGE	TITLE	BUS LMP,CDR,AC	XL BUS	SYSTEM	DRAWING NO.	LOAD AT 28 VDC OR 115 VAC		HEAT LOAD WATTS	PRE-LAUNCH POSITION
								WATTS	AMPS		
1	2	22	SIG CONDR 2	LMP		INST		13	0.46	9.7	
2	2	22	ABORT STAGE	LMP		SCS		4.8 MOM	0.17 MOM		
3	2	22	ABORT STAGE	CDR		SCS		2.2 MOM	0.08 MOM		
4	50	10	X-LUNAR BUS TIE	CDR	X	EPS		444	15.8 MAX		
5	50	14	X-LUNAR BUS TIE	LMP	X	EPS		362 MAX	12.9 MAX		
6	3	22	ASC ECA CONT	CDR		EPS		84 MOM	3 MOM		
7	3	22	ASC ECA CONT	LMP		EPS		84 MOM	3 MOM		
8	5	20	DES ECA CONT	CDR		EPS		84 MOM	3 MON		CLS
9	5	20	DES ECA CONT	LMP		EPS		84 MOM	3 MOM		CLS
10	3	22	DES ECA	CDR	X	EPS		10	0.36	10	CLS
11	3	22	DES ECA	LMP	X	EPS		10	0.36	10	CLS
12	30	10	INV 1	CDR		EPS		VARIABLE	VARIABLE	SEE FIG 5-4	
13	30	10	INV 2	LMP		EPS		VARIABLE	VARIABLE	SEE FIG 5-4	
14	2	22	ASC ECA	LMP		EPS		5	0.18	5	
15	2	22	ASC ECA	CDR		EPS		5	0.18	5	
16	2	22	DISPLAY (EPS)	LMP		EPS		2	0.08		
17	100	6	BAT FEED TIE	LMP		EPS		VARIABLE	VARIABLE		CLS
18	100	6	BAT FEED TIE	CDR		EPS		VARIABLE	VARIABLE		CLS
19	100	4	BUS CROSS TIE	LMP		EPS		VARIABLE	VARIABLE		
20	100	4	BUS CROSS TIE	CDR		EPS		VARIABLE	VARIABLE		
21	2	22	DC BUS VOLT	LMP		INST		NIL	NIL		CLS
22	3	22	DC BUS VOLT	CDR		INST		NIL	NIL		CLS
23	5	18	BUS TIE INV 1	AC A		EPS		AC LOADS			
24	5	18	BUS TIE INV 2	AC A		EPS		AC LOADS			
25	100	6	BAT FEED TIE	LMP		EPS		VARIABLE	VARIABLE		CLS
26	100	6	BAT FEED TIE	CDR		EPS		VARIABLE	VARIABLE		CLS
27	2	22	AC BUS VOLT	AC A		INST		NIL	NIL		
28	10	16	AEA	LMP		SCS		94	3.36	85	
29	15	14	RNDZ RDR	CDR		PGNS		150	5.36	117,160°F	
30	7.5	18	PRIM S-BAND PWR AMPL	LMP		COMM		69	2.45	55	
31	5	22	S-BAND ANT (HEATER)	LMP	X	COMM		51.7	1.85	-40°F-0°F	CLS
32	2	22	PQGS (PROPUL)	LMP		PROP		16	0.57		
33	2	22	CAMERA-SEQUENCE	LMP		CREW PROV		14	0.5		
34	2	22	S-BAND ANT	AC B		COMM		4	0.03 AC		
35	3	22	ANT TRNFR A	CDR		DFI		22.4 MOM	0.8 MOM		
36	3	22	ANT TRNFR B	CDR		DFI		22.4 MOM	0.8 MOM		
37	2	22	ENG ARM	LMP		SCS		10.8	0.39		
40	7.5	18	AELD A	CDR		SCS		100	3.57		
41	7.5	18	AELD B	LMP		SCS		100	3.57		
42	10	16	QUAD 4 TCA -B	LMP		PROP		112/TCA	4/TCA		
43	10	16	QUAD 3 TCA -B	LMP		PROP		112/TCA	4/TCA		
44	10	16	QUAD 2 TCA -B	LMP		PROP		112/TCA	4/TCA		
45	10	16	QUAD 1 TCA -B	LMP		PROP		112/TCA	4/TCA		
49	5	14	ISOL VLV -B	LMP		PROP		70 MOM	2.5 MOM		
50	2	22	TEMP/PRESS/DISP FLAG	LMP		PROP		2.4	0.09		
51	5	16	ASC FEED 1 (SYS A)	CDR		PROP		70 MOM	2.5 MOM		
52	5	18	ASC FEED 1 (SYS B)	LMP		PROP		70 MOM	2.5 MOM		

TABLE 5-II. - CIRCUIT BREAKERS - CONTINUED

CIRCUIT BREAKER (4CB)	RATING (AMPS)	WIRE GAUGE	TITLE	BUS LMP,CDR,AC	XL BUS	SYSTEM	DRAWING NO.	LOAD AT 28 VDC OR 115 VAC		HEAT LOAD WATTS	PRE-LAUNCH POSITION
								WATTS	AMPS		
53	5	22	ASC HE REG	LMP		PROP		28 MOM	1.0 MOM		
54	5	16	CROSS FEED	LMP		PROP		70 MOM	2.5 MOM		
59	10	16	ATT DIR CONT	CDR		SCS		448 MAX	16 MAX		
60	10	16	QUAD 4 TCA -A	CDR		PROP		112/TCA	4/TCA		
61	10	16	QUAD 3 TCA -A	CDR		PROP		112/TCA	4/TCA		
62	10	16	QUAD 2 TCA -A	CDR		PROP		112/TCA	4/TCA		
63	10	16	QUAD 1 TCA -A	CDR		PROP		112/TCA	4/TCA		
67	5	14	ISOL VLV -A	CDR		PROP		70 MOM	2.5 MOM		
68	2	22	DISPLAY (HEATER)	LMP		PROP		1	0.04		
69	20	12	DECA PWR	CDR		SCS		225 MAX	8.04 MAX		
72	5	16	MAIN SOL -A	CDR		PROP		70 MOM	2.5 MOM		
73	5	16	MAIN SOL -B	LMP		PROP		70 MOM	2.5 MOM		
74	5	14	DES HE REG/VENT	CDR		PROP		28 MOM	1.0 MOM		
75	2	22	LOGIC PWR B	LMP		PYRO		5.6	0.2		
76	2	22	LOGIC PWR A	CDR		PYRO		5.6	0.2		
79	20	12	ASA	LMP	X	SCS		258 (HTR) 42 (ELECT)	9.21 1.5	258 42 120°F	CLS
80	2	22	ENG CONT	CDR		SCS		10.5	0.28		
81	2	20	ATCA (PGNS)	CDR		SCS		2.0	0.07	2	
82	7.5	18	ATCA	LMP		SCS		70	2.5	50	
84	2	22	CO_2 SENSOR	LMP		ECS		1.0	0.04		
85	2	22	SE AUDIO	LMP		COMM		7.6 MOM/4.8 SS	0.27 MOM/0.17 SS	4.2	
86	2	20	CDR AUDIO	CDR		COMM		7.6 MOM/4.8 SS	0.27 MOM/0.17 SS	4.2	
87	2	22	VHF A RCVR	CDR		COMM		1.2	0.04	1.2	
88	2	22	GASTA	CDR		FLT DISP		8.1	0.29	8.1	
96	5	20	GLYCOL PUMP SEC	LMP		ECS		30.5	1.09	30.5	
97	2	22	FDAI (CDR)	CDR		FLT DISP		7	0.25		
98	3	20	PRI GLYCOL EVAP FLOW	LMP		ECS		70 MOM	2.5 MOM		
99	2	22	CWEA	LMP		INST		11.4	0.41	11.4	
102	2	22	PMP	LMP		COMM		4.3	0.15	4.3	
103	2	22	TEMP/PRESS DISPLAY	LMP		PROP		3.4	0.12		
104	2	22	TV	LMP		COMM		6	0.21		
105	10	14	LDG RDR	CDR		PGNS		118	4.21		
106	2	22	ENG FIRE OVRD	CDR		SCS		5	0.18		
107	5	20	CABIN FAN 1	CDR		ECS		36.5	1.3	36.5	
108	5	20	CABIN FAN 2	LMP		ECS		36.5	1.3	36.5	
109	2	22	CABIN FAN CONT	LMP		ECS		1.1	0.04		
110	2	22	S-BAND ANT	LMP		COMM		0.7	0.03		
111	5	18	PRIM S-BAND XMTR RCVR	LMP		COMM		33	1.17	32	
112	2	22	DIVERT VLV	LMP		ECS		16 MOM	0.57 MOM		
113	2	22	CABIN REPRESS	LMP		ECS		22 MOM	0.79 MOM		
114	2	22	VHF B RCVR	LMP		COMM		1.2	0.04	1.2	
115	5	20	VHF A XMTR	LMP		COMM		30	1.07	30	
117	5	20	GLYCOL PUMP 1	CDR		ECS		30.5	1.09	30.5	
119	20	12	SUIT FAN 2	LMP		ECS		163	5.82	163	
120	2	22	SUIT FAN ΔP	LMP		ECS		3.6	0.13		
121	2	22	PQGS (RCS)	CDR		PROP		3.2	0.11		
122	7.5	14	LGC/DSKY	CDR		PGNS		80	2.86	110	

TABLE 5-II. - CIRCUIT BREAKERS - CONTINUED

CIRCUIT BREAKER (4CB)	RATING (AMPS)	WIRE GAUGE	TITLE	BUS LMP, CDR, AC	XL BUS	SYSTEM	DRAWING NO.	LOAD AT 28 VDC OR 115 VAC		HEAT LOAD WATTS	PRE-LAUNCH POSITION
								WATTS	AMPS		
123	2	22	RNG/RNG RT-ALT/ALT RT	CDR		FLT DISP		4.6	0.16		
124	20	12	IMU OPR	CDR	X	PGNS		202	7.2	200	
125	2	22	PCMTE	LMP		INST		11	0.39	10.3	
126	2	22	EVENT TIMER, SE FDAI	LMP		FLT DISP		8.5	0.3		
128	5	22	FLOOD	LMP	X	LIGHTING		64.4	2.3		CLS
129	2	22	DOCK WINDOW (HEATER)	CDR		EPS		22	0.79		
131	3	22	SIG CONDR 1	CDR		INST		15.4	0.55	16.4	
132	2	22	SIG SENSOR	LMP		INST		15.3 MATED 11.5 STAGED	0.55 MATED 0.41 STAGED		
133	2	22	X-PNTR (CDR)	CDR		FLT DISP		2.2	0.08		
134	2	22	X-PNTR (SE)	LMP		FLT DISP		2.2	0.08		
136	7.5	18	SEC S-BAND PWR AMPL	CDR		COMM		69	2.45	55	
137	5	18	SEC S-BAND XMTR/RCVR	CDR		COMM		33	1.17	32	
138	20	12	SUIT FAN 1	CDR		ECS		163	5.82	163	
140	2	22	DISP (ECS)	LMP		ECS		8.7	0.31		
141	5	20	GLYCOL PUMP 2	CDR		ECS		30.5	1.09	30.5	
144	2	22	CDR FWR WINDOW (HEATER)	AC A		EPS		76	0.66 AC		
146	2	22	ANVN/DOCK/COMPNT	CDR	X	LIGHTING		21.5 MAX	0.77 MAX	4.5	CLS
147	2	22	MASTER ALARM	LMP		LIGHTING		7.2	.26		
148	2	22	ANVN/DOCK/COMPNT	LMP		LIGHTING		21.5 MAX	0.77 MAX	4.5	CLS
149	2	22	LDG GEAR FLAG	CDR		PYRO		0.1	0.004		
152	2	22	SE WINDOW (HEATER)	AC B		EPS		76	0.66 AC		
153	2	22	DISPLAY (COMM)	LMP		COMM		3	0.11		
154	2	22	SIG STR DISP	CDR		PGNS		1	0.04		
155	7.5	20	RDR OPR (HEATER)	CDR	X	PGNS		92	3.29	-10°F+20°F	
156	7.5	20	RNDZ STBY (HEATER)	CDR		PGNS		81	2.89	-40°F-0°F	CLS
157	5	20	LDG RDR (HEATER)	CDR	X	PGNS		63	2.25	0°F+20°F	CLS
159	2	22	MISSION TIMER	CDR		FLT DISP		2.5	0.09		
160	20	12	TRACKING LIGHT	LMP		LIGHTING		224	8.0	109	
161	5	14	IMU STBY	CDR	X	PGNS		95	3.4	20, 130°F	CLS
162	5	20	VHF B XMTR	CDR		COMM		31.7	1.13	28.3	
168	2	22	THRUST DISP	CDR		FLT DISP		2.2	0.08		
169	2	22	HE/PQGS DISP	AC B		PROP		6.7	0.06		
181	30	10	R/D INST (ALSO SEE CB229)	CDR		DFI		295	10.5	254	
182	50	4	SCIENTIFIC EQUIP (DESC)	LMP		EPS		NOT USED			
183	30	8	BAL LOAD CROSS TIE	LMP		EPS		VARIABLE	VARIABLE		CLS
184	30	8	BAL LOAD CROSS TIE	CDR		EPS		VARIABLE	VARIABLE		CLS
185	5	18	BUS TIE INV 1	AC B		EPS		AC LOADS			
186	5	18	BUS TIE INV 2	AC B		EPS		AC LOADS			
188	2	22	COAS	CDR		CREW PROV		8.4	0.3		
200	2	22	NUM	AC B		LIGHTING		4.6	0.06 AC		
201	2	22	GASTA	AC A		FLT DISP		17.8	0.16 AC	17.8	
202	2	22	TAPE RCDR	AC A		INST		2.7	0.02 AC	2.7	
203	2	22	AGS	AC B		SCS		3	0.03 AC	3	
204	2	22	RNG/RNG RT-ALT/ALT RT	AC A		FLT DISP		8.8	0.08 AC		
206	2	22	RNDZ RDR	AC A		PGNS		14	0.12 AC	10	
207	2	22	DECA GIMBAL	AC A		SCS		86	0.75 AC		
209	2	22	CDR FDAI	AC A		FLT DISP		4.5	0.04 AC		
210	2	22	SE FDAI	AC B		FLT DISP		4.5	0.04 AC		

TABLE 5-II. - CIRCUIT BREAKERS - CONCLUDED

CIRCUIT BREAKER (4CB)	RATING (AMPS)	WIRE GAUGE	TITLE	BUS LMP,CDR,AC	XL BUS	SYSTEM	DRAWING NO.	LOAD AT 28 VDC OR 115 VAC		HEAT LOAD WATTS	PRE-LAUNCH POSITION
								WATTS	AMPS		
211	2	22	INTGL	AC A		LIGHTING		27.2	0.35 AC		
212	2	22	AOT LAMP	AC A		PGNS		4.6	0.04 AC		
213	2	22	AOT (HEATER)	CDR		PGNS		5	0.18		
214	2	22	AOT LAMP	AC B		PGNS		4.6	0.04 AC		
217	2	22	AUTO TRNFR	CDR		ECS					
218	7.5	20	QUAD 1 RCS SYS A/B-1:::	CDR		PROP		95.5	3.41		
219	7.5	20	QUAD 2 RCS SYS A/B-1:::	CDR		PROP		95.5	3.41		
220	7.5	20	QUAD 3 RCS SYS A/B-1:::	CDR		PROP		95.5	3.41		
221	7.5	20	QUAD 4 RCS SYS A/B-1:::	CDR		PROP		95.5	3.41		
222	7.5	20	QUAD 1 RCS SYS A/B-2:::	LMP		PROP		95.5	3.41		
223	7.5	20	QUAD 2 RCS SYS A/B-2:::	LMP		PROP		95.5	3.41		
224	7.5	20	QUAD 3 RCS SYS A/B-2:::	LMP		PROP		95.5	3.41		
225	7.5	20	QUAD 4 RCS SYS A/B-2:::	LMP		PROP		95.5	3.41		
226	2A	22	ORDEAL	AC B		PGNS		4	0.035 AC		
227	2A	22	ORDEAL	CDR		PGNS		4	0.14		
228	2	22	UPDATA LINK	CDR		COMM		14	0.5		
229	30A	10	R/D INST (ALSO SEE CB181)	CDR		DFI		295	10.5	254	
230	3	22	ATCA AGS	LMP		SCS					
231	5	12	ASC FEED 2 (SYS A)	CDR		PROP					
232	5	16	ASC FEED 2 (SYS B)	LMP		PROP					
233	10	16	DES ENG OVRD	LMP		SCS					
234	5	20	SUIT FLOW CONT	LMP		ECS					
235	2	22	SUIT CABIN REPRESS	LMP		ECS					

:::RCS THRUSTER HEATERS

WIRE CAPACITY

WIRE GAUGE	SEA LEVEL	VACUUM (.65)
4	80	52
6	60	39
8	46	29.9
10	33	21.4
12	23	15
14	17	11
16	12	8.5
18	10	6.5
20	7.5	4.87
22	5	3.25

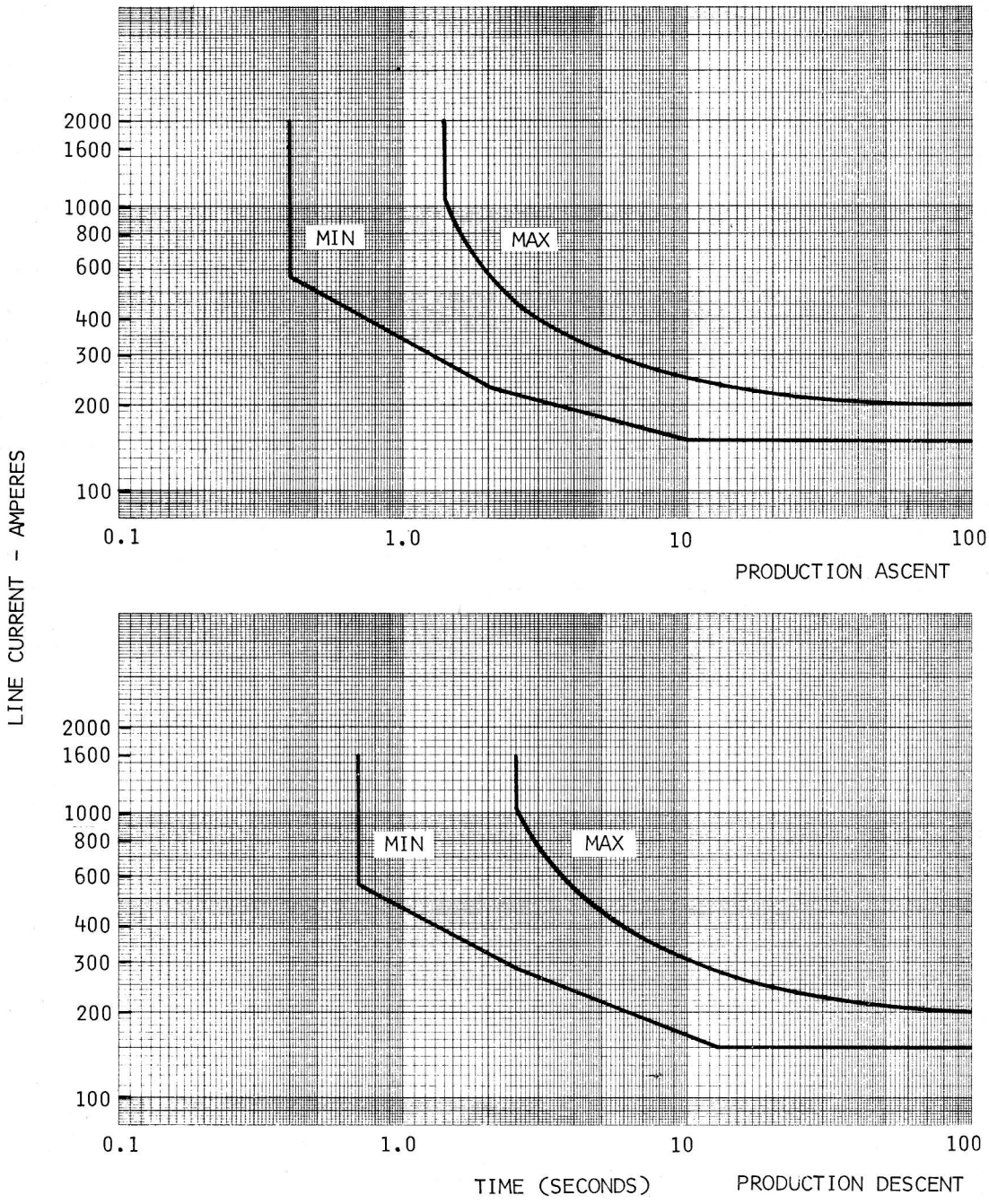

Figure 5-2.- ECA overcurrent trip limits.

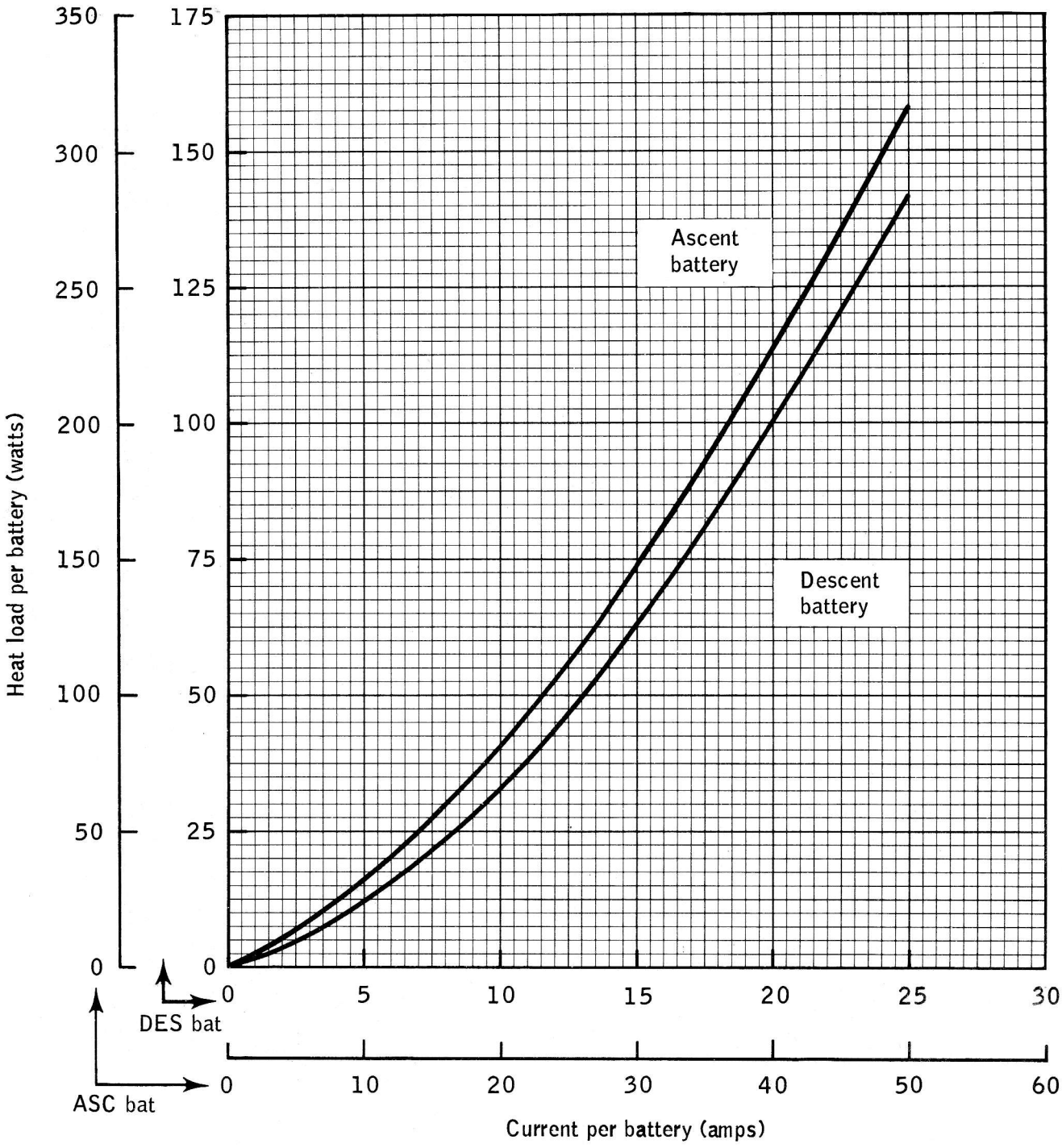

Figure 5-3.- Battery heat loads.

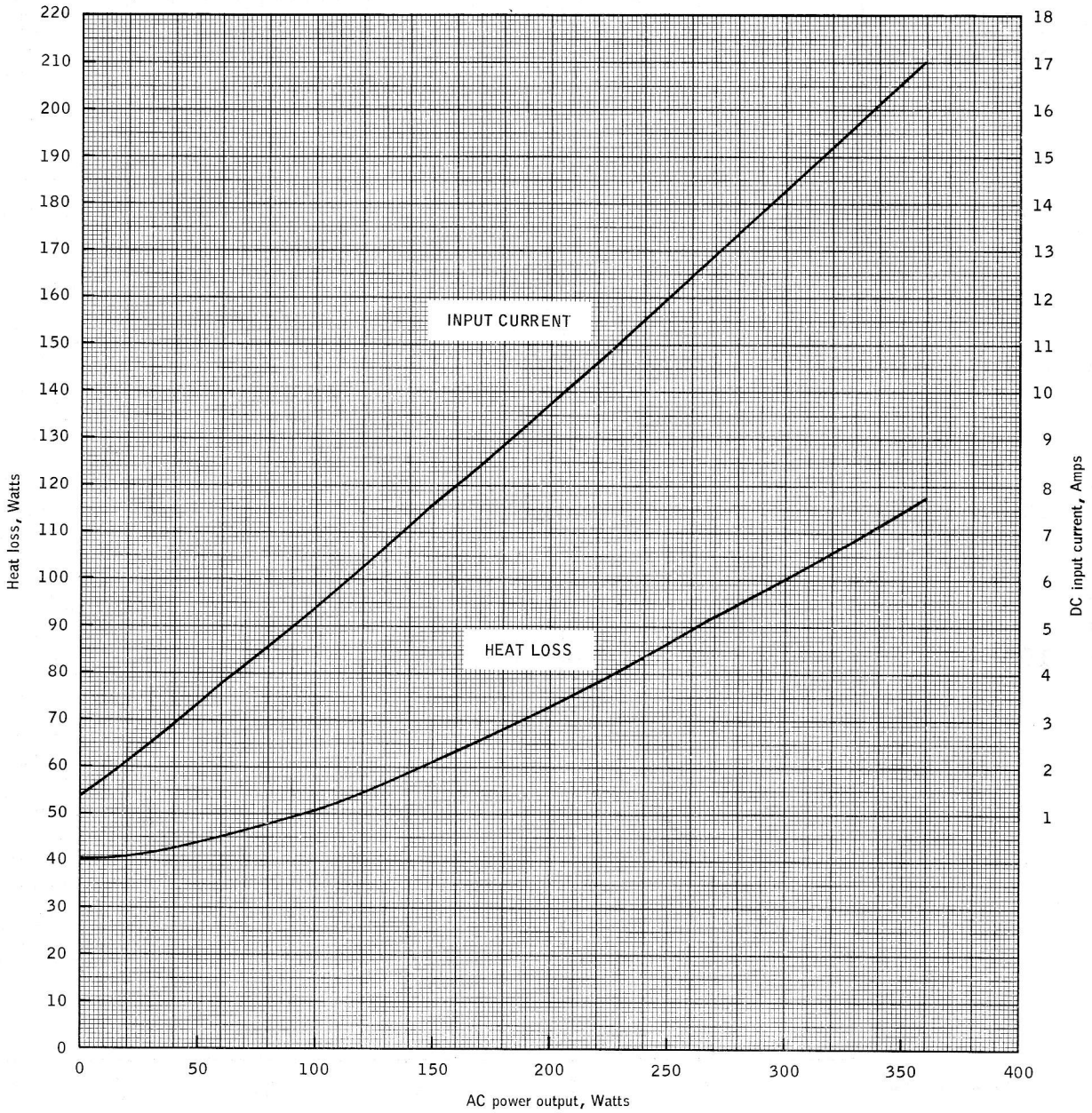

DC power input = AC power output + heat loss

Figure 5-4.- Inverter heat load and DC input current vs AC load.

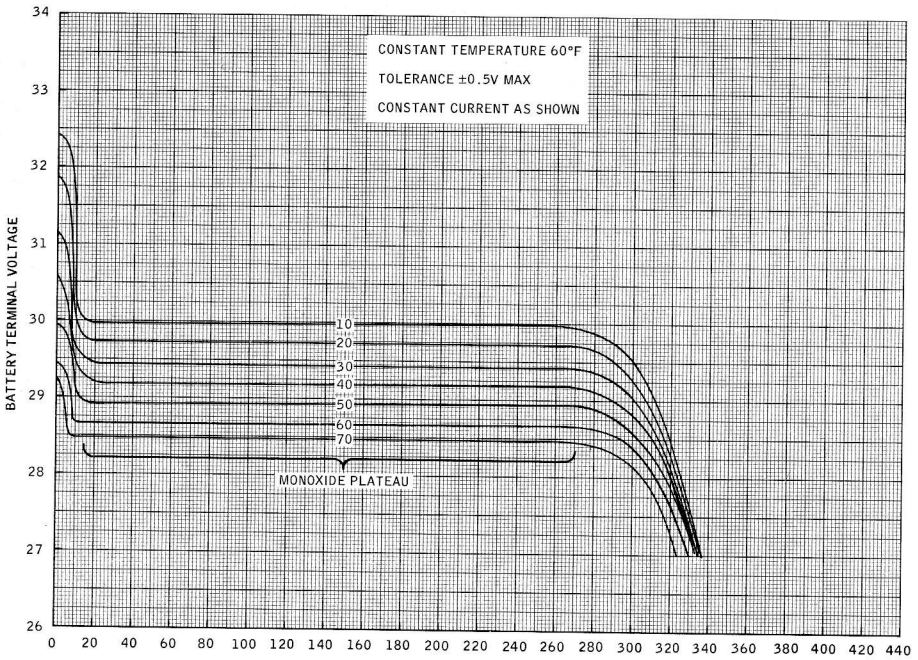

LM PRIMARY ASCENT BATTERY CHARACTERISTICS

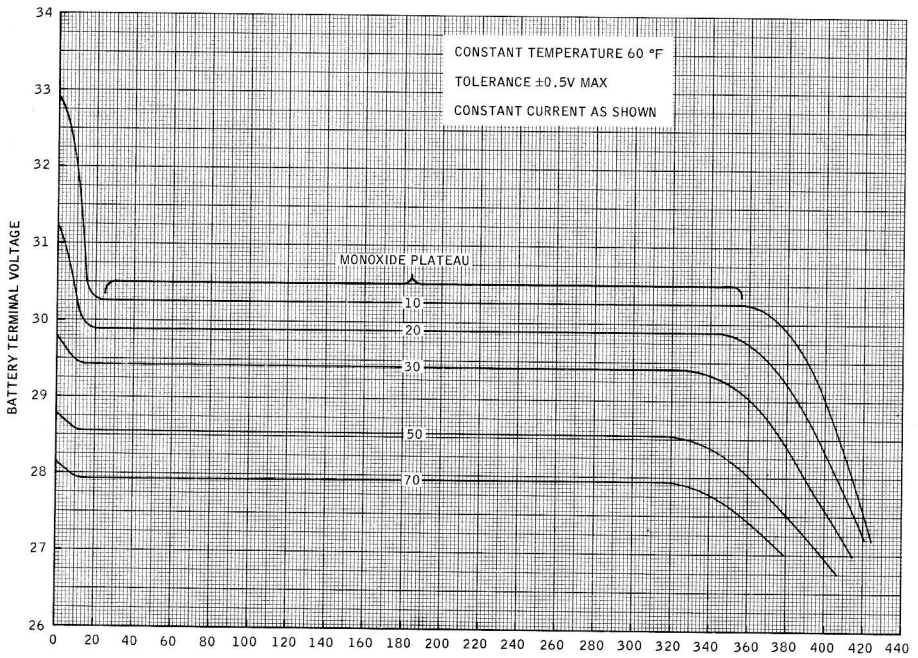

LM PRIMARY DESCENT BATTERY CHARACTERISTICS

Figure 5-5.- Primary battery voltage versus current characteristics.

LTR	SH	DESCRIPTION	DATE	APPROVAL

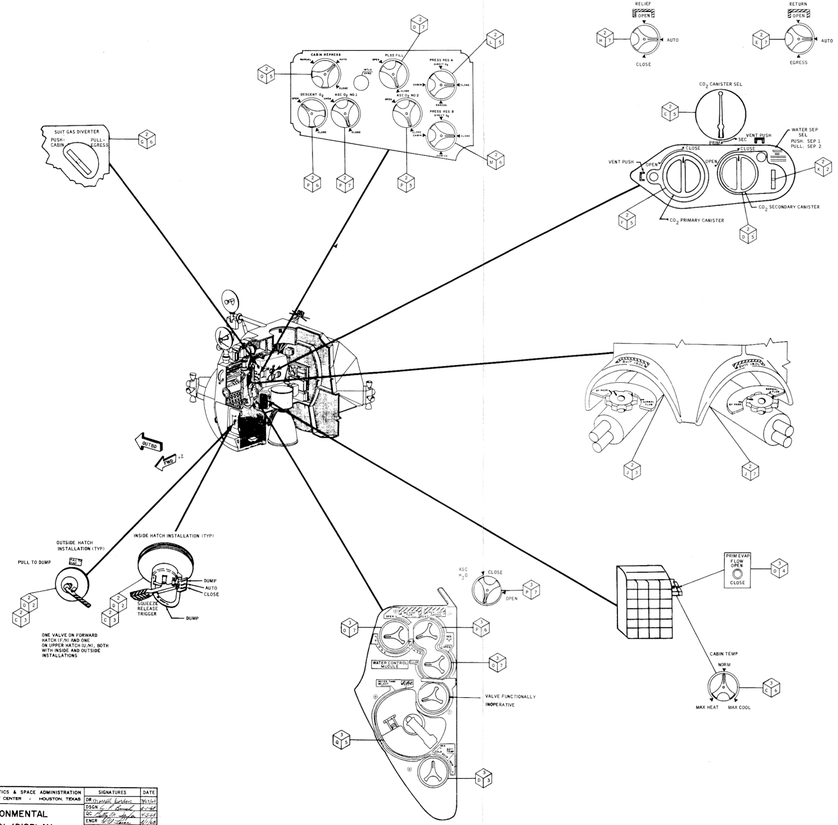

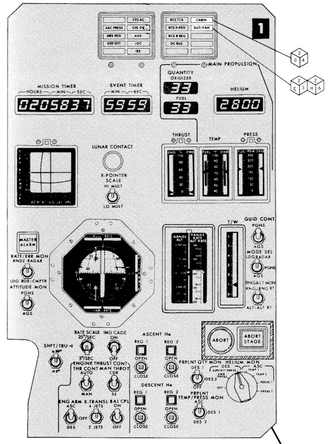

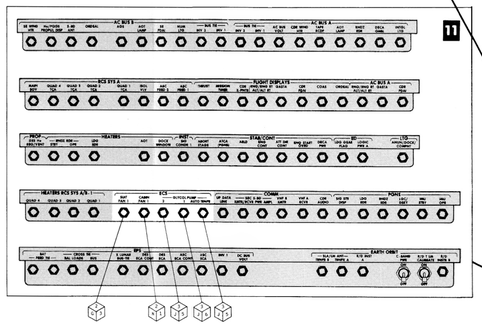

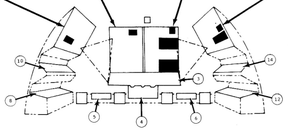

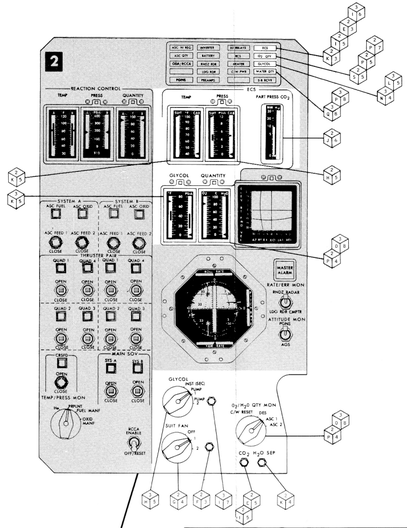

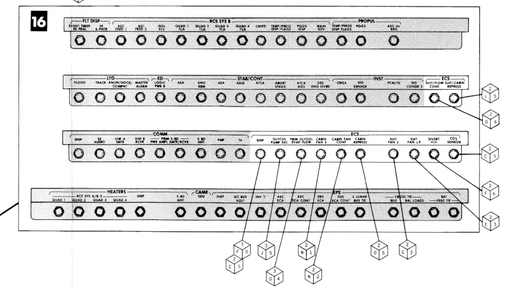

NATIONAL AERONAUTICS & SPACE ADMINISTRATION MANNED SPACECRAFT CENTER - HOUSTON, TEXAS	SIGNATURES	DATE
ENVIRONMENTAL CONTROL/DISPLAY	DR Marshall Robbins	7/31/67
	DSEA J. Arnold	7/31/67
	SC Safety Mgr.	7/31/67
	CNCE [illegible]	7/31/67
DWG NO. FIGURE 6-1	APP [illegible]	8/2/67
SIZE J	FEC [illegible]	7/31/67
LM LM-3	MSFN Ex. Dir.	8/2/67
SHEET 1 OF 1 PAGE 6-1	NAS 9-8166	

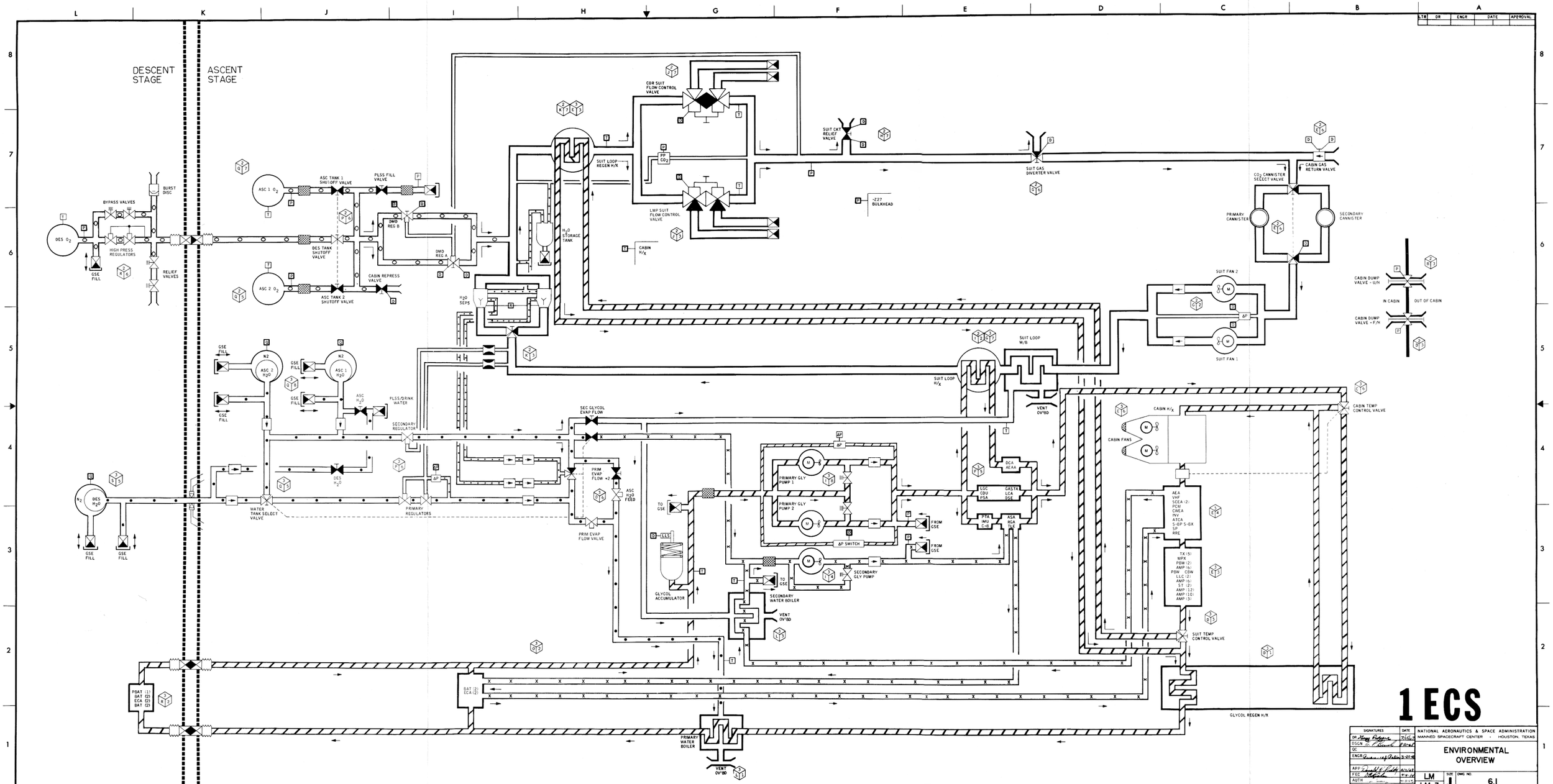

1 ECS

SIGNATURES	DATE
OR Harry Peters	7/66
DSGN E. J. Rauch	7/66
QC	
ENGR Russ Ingram	7-22-66
APP Donald K. Slayton	8/2/66
FEC Joseph F. Shea	8-4-66
AUTH	

NATIONAL AERONAUTICS & SPACE ADMINISTRATION
MANNED SPACECRAFT CENTER · HOUSTON, TEXAS

ENVIRONMENTAL OVERVIEW

LM | SIZE J | DWG NO. 6.1

LM-3 | 44 X 34 | PAGE 6-2 | SHEET 1 OF 1

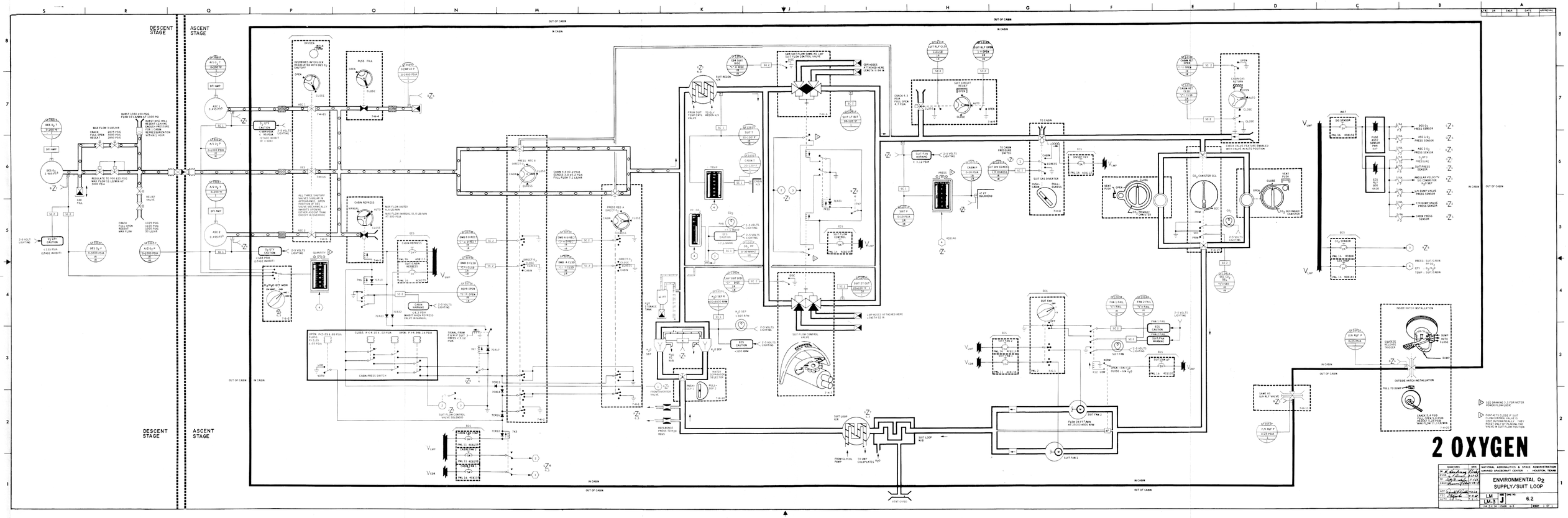
DESCENT STAGE
ASCENT STAGE
OUT OF CABIN
IN CABIN
2 OXYGEN
ENVIRONMENTAL O2 SUPPLY/SUIT LOOP
NATIONAL AERONAUTICS & SPACE ADMINISTRATION
MANNED SPACECRAFT CENTER - HOUSTON, TEXAS
LM LM-3 J
DRAWING NO. 62
SHEET 1 OF 1
SEE DRAWING 3.1 FOR METER POWER FLOW LOGIC
CONTACTS CLOSE IF SUIT CIRCUIT PRESSURE DROPS TO 3.7 PSIA AND OPEN AUTOMATICALLY. THEY RESET ONLY BY PLACING THE VALVE IN SUIT FLOW POSITION

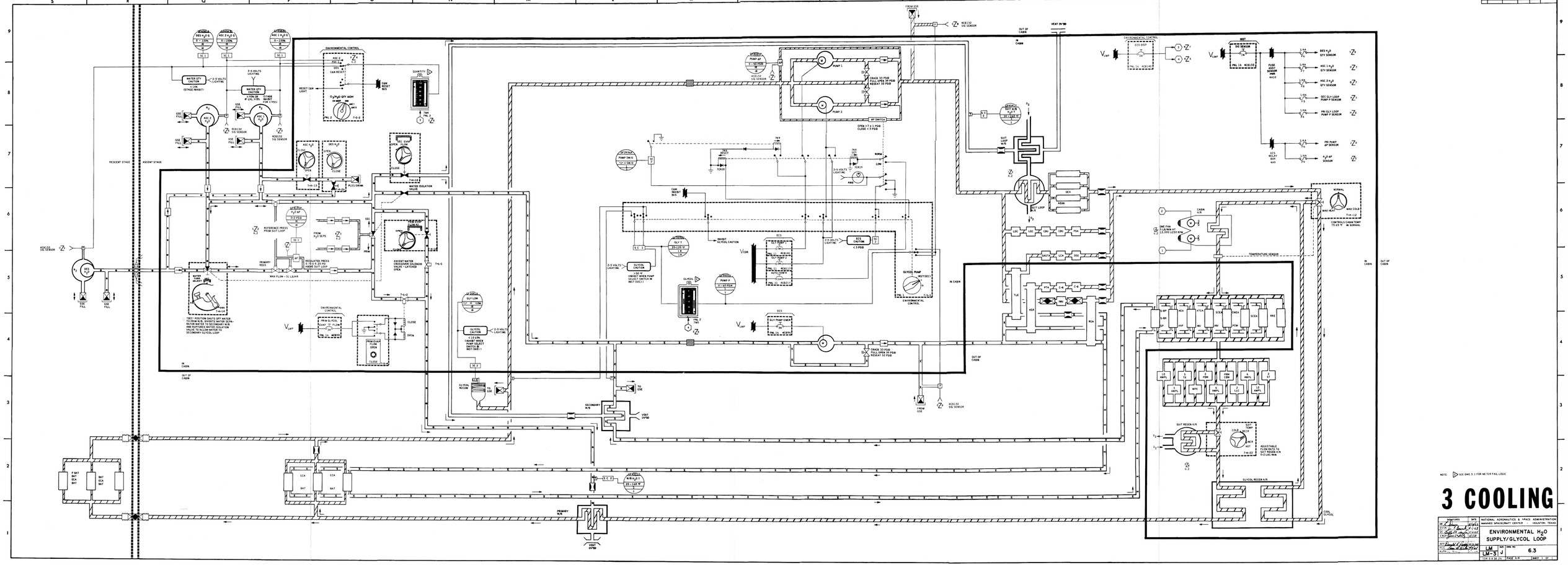
DESCENT STAGE
ASCENT STAGE
IN CABIN
OUT OF CABIN
WATER QTY CAUTION
2-5 VOLTS LIGHTING
WATER QTY CAUTION <10% (STAGE INHIBIT) OR LVL VLVS
<10% (STAGE INHIBIT) FOR 4 MIN
ENVIRONMENTAL CONTROL
ASC 2 H2O QTY
DES H2O QTY
CWS RESET
RESET CWS LIGHT
CWS RESET BUS
QUANTITY IND
TANK PRESS
GSE FILL
ASC 1 H2O
ASC 2 H2O
DES H2O
SEC EVAP SPLY
SEC EVAP OUTLET
WATER ISOLATION VALVE
PLSS/DRINK
REFERENCE PRESS FROM SUIT LOOP
FROM H2O SEPS
PRIMARY FEEDS
REGULATED PRESS 4.75 ± 0.25 PSI ABOVE SUIT LOOP
WASTE H2O TANK VALVES
TANK 1 TANK 2
"SEC" POSITION SHUTS OFF WATER TO PRIM H2O, DIVERTS WATER SEPARATOR WATER TO SECONDARY H2O
"PRIM" POSITION SHUTS OFF WATER VALVE TO ALLOW WATER TO SECONDARY GLYCOL LOOP
MAIN FLOW - SEE LEAK
ASCENT WATER CROSSOVER SOLENOID VALVE - LATCHED OPEN
PRIM EVAP OUTLET
PRIM GLYCOL EVAP OUTLET
GLYCOL ACCUM
GLYCOL CAUTION
4.15 ± 0.25 TIMAINT INHIB 2-5 VOLTS LIGHTING
GLYCOL PUMP SELECT SWITCH (SEE SHEET 3)
GLYCOL PUMP P
GLYCOL PUMP DELTA P
GLYCOL PUMP SELECT SWITCH IN INST (SEE 3)
GLYCOL PUMP
ENVIRONMENTAL CONTROL
ECS CAUTION
<3 PSID
INHIBIT GLYCOL CAUTION
GLYCOL LOOP
PUMP 1
PUMP 2
CRACK 33 PSID FULL OPEN 39 PSID RESEAT 32 PSID
OPEN >7 ± 1 PSID CLOSE < 7 PSID
AP SWITCH
PUMP DELTA P
SUIT LOOP H/R
SUIT LOOP
SUIT HEATER
SUIT TEMP VALVE
NORMAL
MAX HEAT
MAX COLD
CONTROLS CABIN TEMP 75 ±5 °F IN NORMAL
CABIN H/R
ONE FAN 13 LB/MIN AT 3.5 IN H2O @550 RPM
TEMPERATURE SENSOR
SUIT REGEN H/R
SUIT TEMP VALVE
COLD
HOT
ADJUSTABLE 2 TO 12 LB/HR SUIT REGEN H/R 2-12 LBS/HR
GLYCOL REGEN H/R
COOL GLYCOL
SECONDARY H/R
PRIMARY H/R
VENT 3V'SB
TO GSE
FROM GSE
ECS RELAY BOX A4A3
SES H2O QTY SENSOR
ASC 1 H2O QTY SENSOR
ASC 2 H2O QTY SENSOR
SEC GLY LOOP PUMP P SENSOR
PRI GLY LOOP PUMP P SENSOR
PRI PUMP AP SENSOR
H2O AP SENSOR
SUIT LOOP AP SENSOR
SUIT H2O AP
SUIT LOOP
SCA
ASA
RCA
TLE
FCA
CCA
SCEA
MCA
MCE
LCA
SCA
LGC
CBC
CBM
PSA
DSEA
DSE
LEA
LSE
LV AMPL
LV LGC
LV AMPL
MPS
PRM CBM
PRM CBC
PRM AMPL
PRM AMPL
LV LGC
LV AMPL
LV AMPL
BAT
ECA
BAT
ECA
BAT
ECA

I. Suit Loop

A. Suit Isolation Valves

A recent modification to the existing ECS hardware is the substitution of a new valve for each of the present suit flow control valves (Item 128). These new valves have been incorporated in order to protect against a catastrophic leak in one of the suits or a suit umbilical, being fatal to both crewmen. The present REVERSE flow feature will be eliminated from the new valve since it will be possible to reverse the suit connectors on the suit, to obtain this function.

Operation of the new valves is described in the following paragraph: If the cabin is depressurized and a leak develops in the suit and suit loop of such a magnitude that suit pressure falls to 3.12 $\pm$ 0.18 psia, the solenoid on the new valves will close, isolating both crewmen from the suit loop. At the same time, the cabin repressurization valve opens and oxygen is dumped into the cabin. The crewmen in the failed part of loop will decompress to cabin pressure. The other crewman will be isolated from further ventilation and a resupply of oxygen. His suit will begin to lose pressure slowly. This crewman will then have the responsibility to establish cabin conditions that will allow opening of his isolation valves.

B. Water Storage Tank and Drain Lines

To preclude a marginal water separator torque condition due to water accumulation, a drain line from each separator has been routed to a small storage facility located below the suit loop package. Additionally, a drain line from the normal low point of the loop will be routed to this tank in order to prevent water accumulation under partial gravity conditions. The aforementioned tank will hold approximately 1 pint of water.

II. Water Supply Section

A. Secondary to Primary Water Feed

A hand valve on the water module, entitled PRIM EVAP FLOW #2, can be used to transfer ascent water from the secondary water regulator to the primary water boiler. The LMP solenoid valve (7L1), located downstream of the hand valve, will be lock-wired open. This configuration will permit continued use of the primary coolant loop in the event of a failure in its primary water feed path.

B. Fire Extinguishing Capability

A water line, external to the water module, has been added between ascent water tank #1 and the PLSS/DRINK flexible hose. In series with this added piece of plumbing is a control valve (ASC H_2O) which is used to allow high pressure water to the flexible hose for fire fighting purposes. The hose length has been increased to 7 feet.

III. Glycol Loop

A. Water Boiler Shutdown

There is a possibility that due to power conservation requirements, it will be necessary to shutdown the water boiler at some point during the mission. The sequence of events used to accomplish this task has not, as yet, been finalized due to lack of test data.

In general, the time required to dry out the water boiler will be a function of the cumulative heat load imposed upon the boiler at the time of shutdown. At this time, it is assumed that the monitoring of the onboard glycol temp meter (7M5B), and measurement GF9998U on the ground, will be sufficient to roughly determine the water boiler dryout status.

TABLE 6-I.- ECS VALVES/CABIN FAN PRESSURE SCHEDULES

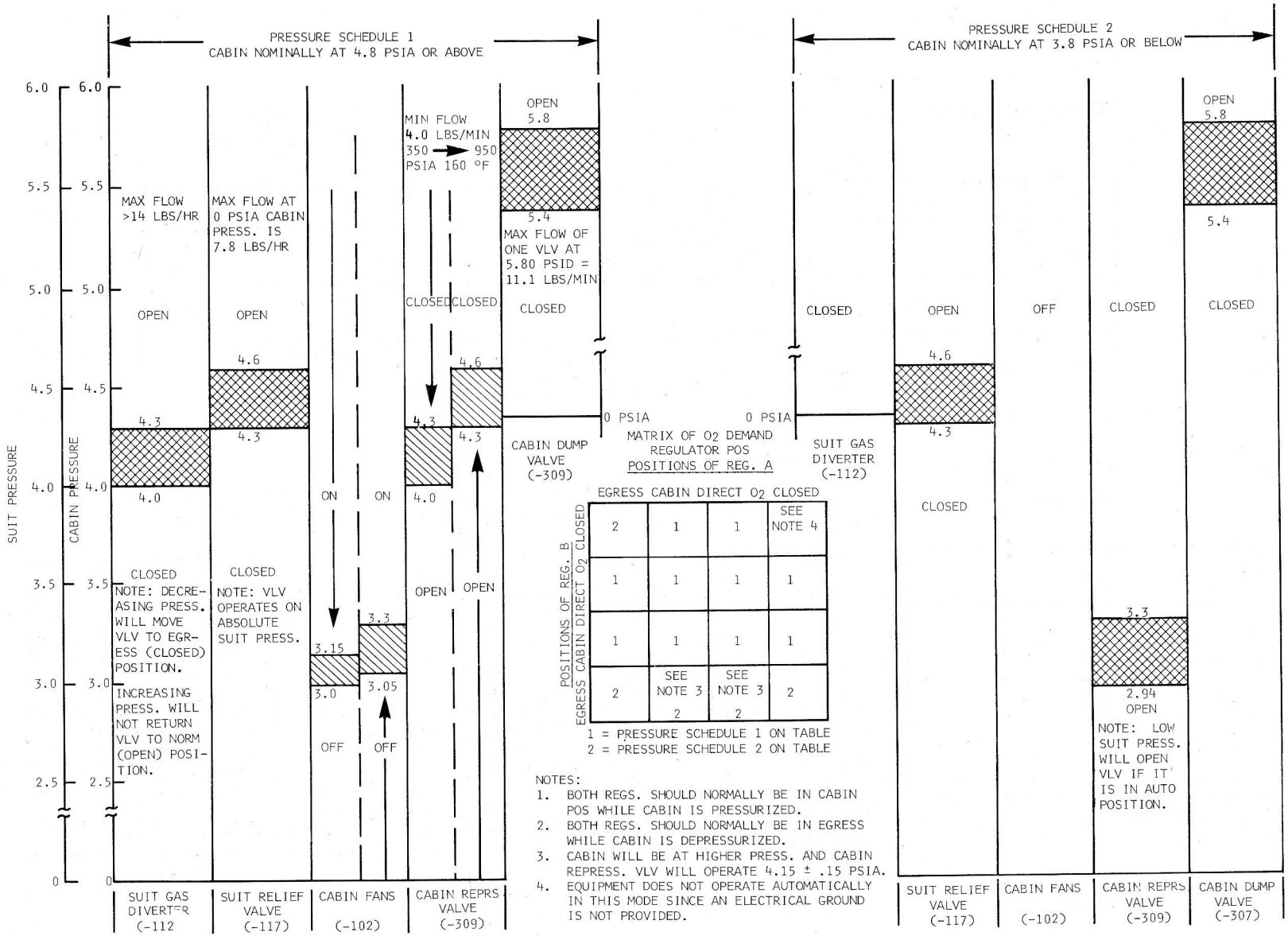

NOTES:
1. BOTH REGS. SHOULD NORMALLY BE IN CABIN POS WHILE CABIN IS PRESSURIZED.
2. BOTH REGS. SHOULD NORMALLY BE IN EGRESS WHILE CABIN IS DEPRESSURIZED.
3. CABIN WILL BE AT HIGHER PRESS. AND CABIN REPRESS. VLV WILL OPERATE 4.15 ± .15 PSIA.
4. EQUIPMENT DOES NOT OPERATE AUTOMATICALLY IN THIS MODE SINCE AN ELECTRICAL GROUND IS NOT PROVIDED.

TABLE 6-II.- SUIT LOOP MODES

MODE	SWITCH/VALVE POSITION														
	DES O_2	ASC 1 O_2	ASC 2 O_2	CABIN REPRESS	PLSS FILL	DMD REG A	DMD REG B	SUIT RELIEF	SUIT DIVERTER	CABIN RETURN	CANNISTER SEL	SUIT FAN SEL	WATER SEP SEL	CABIN DUMP	SUIT FLOW CONTROL
Cabin (DES)	OPEN	CLOSE	CLOSE	AUTO	CLOSE	CABIN	CABIN	AUTO	CABIN	AUTO	PRIM	1	SEP 1	AUTO	TBD
Cabin (ASC)	CLOSE	OPEN	CLOSE	AUTO	CLOSE	CABIN	CABIN	AUTO	CABIN	AUTO	PRIM	1	SEP 1	AUTO	TBD
EGRESS (DES)	OPEN	CLOSE	CLOSE	CLOSE	CLOSE	EGRESS	EGRESS	CLOSE	EGRESS	EGRESS	PRIM	1	SEP 1	DUMP/ AUTO	TBD
EGRESS (ASC)	CLOSE	OPEN	CLOSE	CLOSE	CLOSE	EGRESS	EGRESS	CLOSE	EGRESS	EGRESS	PRIM	1	SEP 1	AUTO	TBD

[1]The following C/B are closed: 4CB140 - ECS DISP; 4CB113 - CABIN REPRESS; 4CB112 - DIVERT VLV; 4CB138 - SUIT FAN 1 4CB119 - SUIT FAN 2; 4CB120 - SUIT FAN ΔP; 4CB84 - CO_2 SENSOR; 4CB235 - SUIT/CABIN REPRESS.

TABLE 6-III.- GLYCOL LOOP MODES

MODE	SWITCH/VALVE POSITION								
	WATER TANK SEL	PLSS/ DRINK	PRIM EVAP FLOW	SEC EVAP FLOW	PRIM EVAP FLOW #2	GLY PUMP SEL	CABIN TEMP CONTROL	SUIT TEMP CONTROL	ASC H_2O
Normal (DES)	DES	CLOSE	OPEN	CLOSE	CLOSE	1	NORMAL		CLOSE
Normal (ASC)	ASC	CLOSE	OPEN	CLOSE	CLOSE	1	NORMAL		CLOSE
Secondary	SEC	CLOSE	CLOSE	OPEN	CLOSE	SEC			CLOSE

[1]The following C/B are closed: 4CB109 - CABIN FAN CONT; 4CB108 - CABIN FAN 2; 4CB107 - CABIN FAN 1 4CB96 - GLYCOL PUMP SEC: 4CB117 - GLYCOL PUMP 1: 4CB141 - GLYCOL PUMP 2; 4CB98 - PRIM GLYCOL EVAP FLOW.

To be provided at a later date.

Figure 6-2.- Estimated glycol temperature (GF9998U) profile for water boiler startup and shutdown

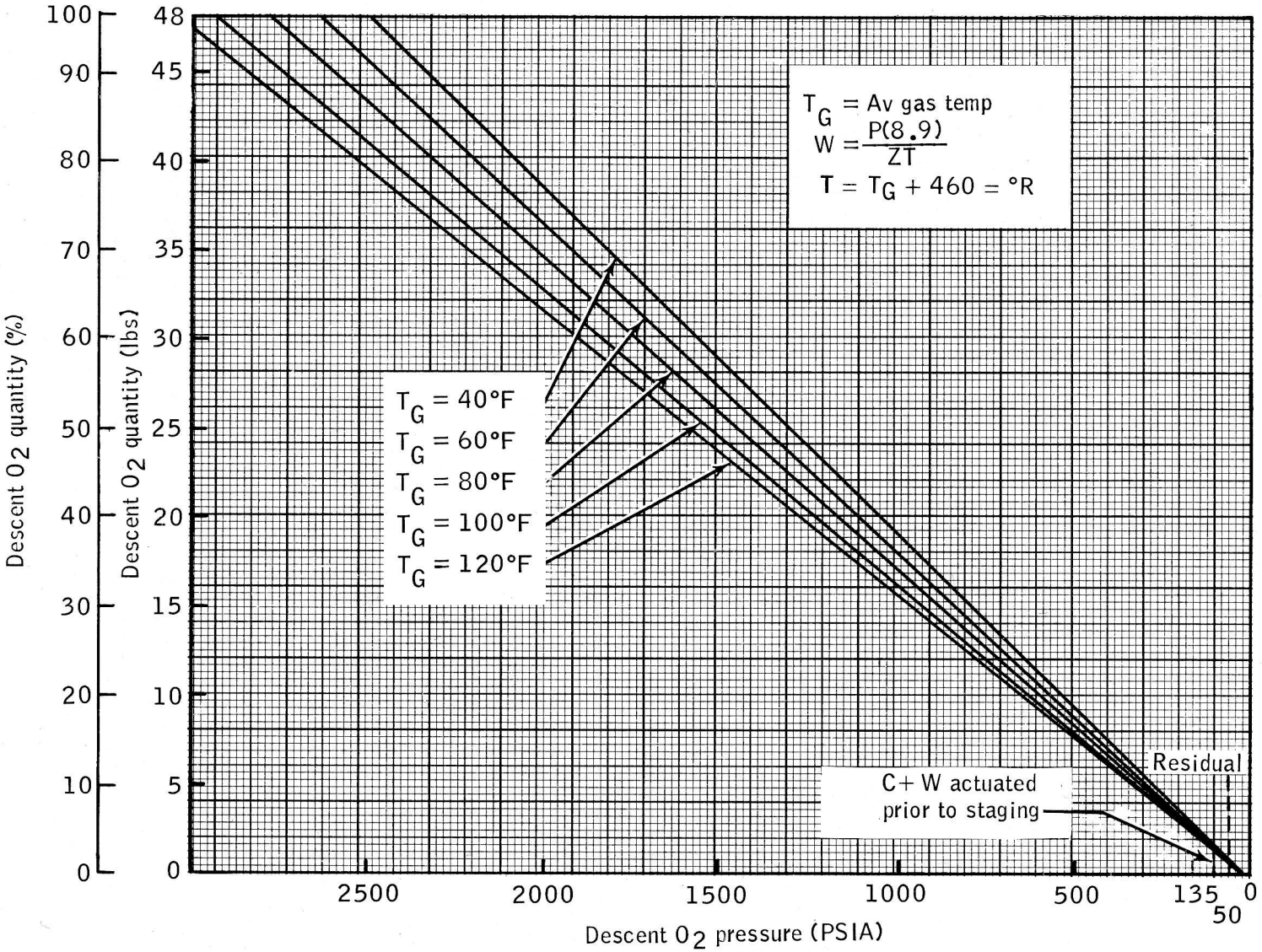

Figure 6-3.- Descent O_2 quantity vs pressure and temperature.

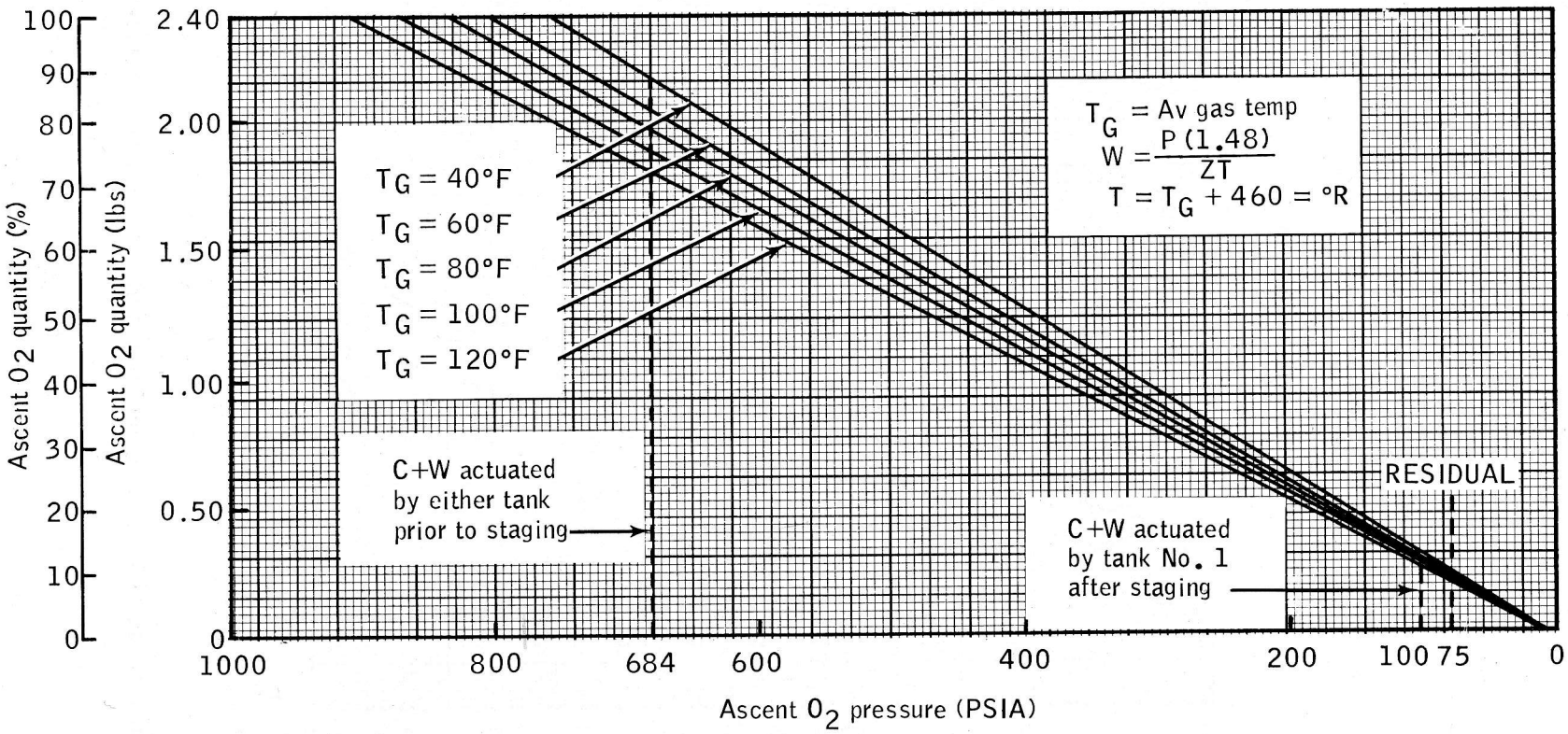

Figure 6-4.- Ascent O_2 quantity vs pressure and temperature.

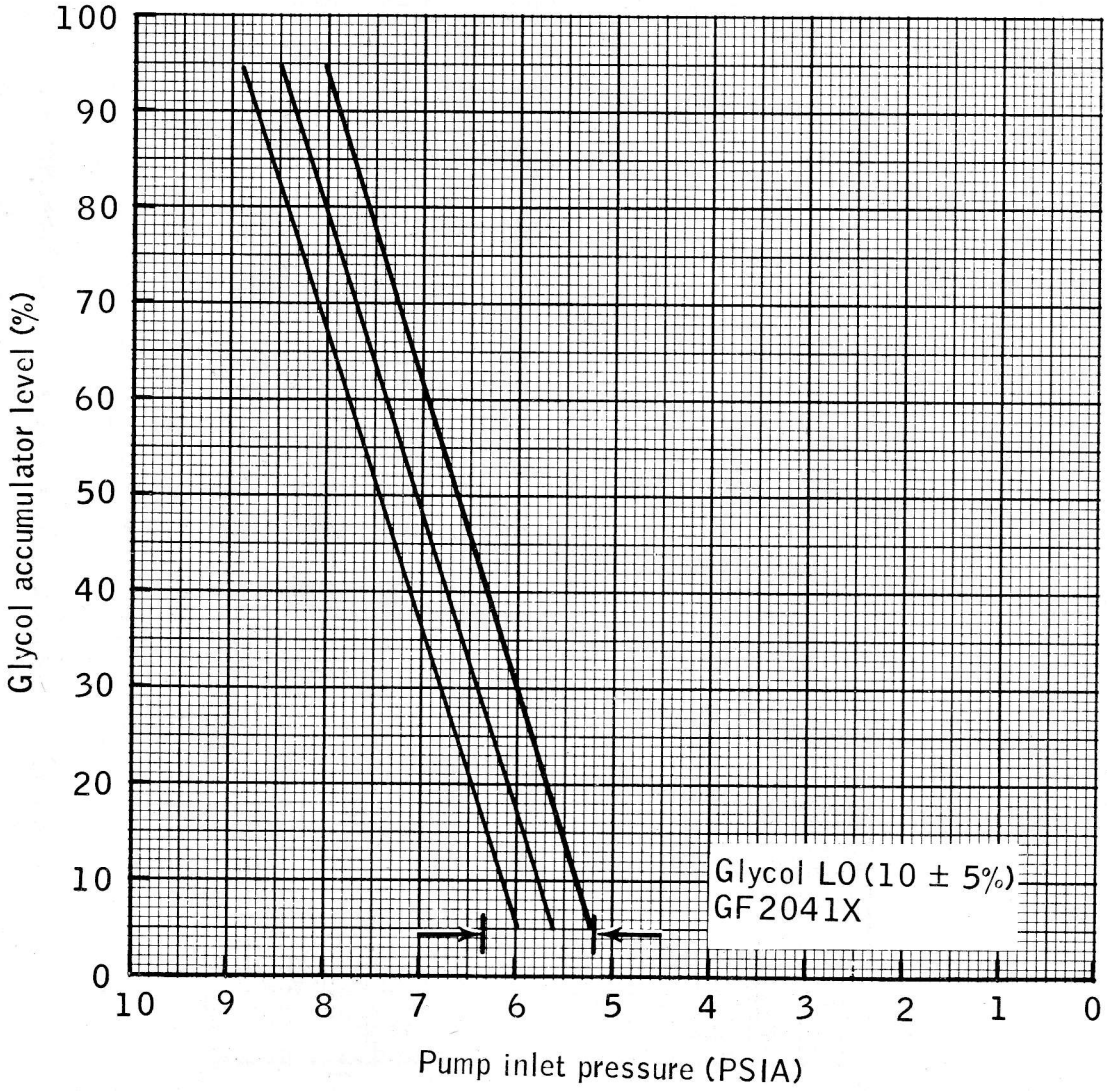

Figure 6-5.- Glycol accumulator pressure versus accumulator level.

To be provided at a later date.

Figure 6-6.- Flow rate versus pump ΔP and glycol temperature

EQUIPMENT	DATA				
	OXYGEN SUPPLY SECTION				
	CRACK	OPEN	RESET	LOCKUP	FLOW RATE
BYPASS VALVES	2875	3000	2850	2800	3.0 LBS/HR (MAX)
RELIEF VALVES	1025	1090	985	985	50.0 LBS/HR (MAX)
BURST DISK	RUPTURE PRESS. = 1350 ± 50 PSIA				600.0 LBS/HR (MAX)
HIGH PRESS. REGULATORS	REG PRESS. = 900 ± 25 PSIA				11 LBS/MIN (MAX) 3000 PSIA AND 70°F
	SUIT LOOP				
DEMAND REGULATORS	REG PRESS. = 3.8 ± .2 OR 4.8 ± .2 PSIA DIRECT (OPEN) FLOW RATE = 7.1 LBS/HR				
REGENERATIVE H/X	____BTU/HR MAX (GLYCOL TO O_2) ADJUSTABLE GLYCOL FLOW RATE: 0 TO 2 LBS/MIN O_2 TEMP OUT: ____°F MAX, ____°F MIN				
LIOH CARTRIDGE(S)	5 LBS LIOH/CARTRIDGE CAPACITY PER CARTRIDGE: 41 MAN-HRS AT 0.098 LBS/MAN-HR				
FAN(S)	AT 4.8 PSIA: 24 FT^3/MIN (0.7 LB/MIN) AT 3.8 PSIA: 24 FT^3/MIN (0.5 LB/MIN) CONSTANT SPEED FANS: 25000 ± 500 RPM				
H/X	O_2 TEMP OUT: ____°F TO ____°F MAX CAPACITY: ____BTU/HR				
SUIT W/B	APPROX: 1900 BTU/HR				
H_2O SEPARATORS	AT 4.8 PSIA: 1200 TO 3400 RPM & ____ TO 7.2 PSIA H_2O AT 3.8 PSIA: 850 TO 2000 RPM & 4.9 TO ____ PSIA H_2O				
	CABIN				
CABIN PRESS. SWITCHES	CLOSE: 4.15 ± 0.15 PSIA (DECREASING) OPEN: 4.45 ± 0.15 PSIA (INCREASING)				
REPRESS VALVE	FLOW RATE = 480.0 LBS/HR (MAX) AT 500 PSIA				
DUMP VALVE(S)	5.0 TO 0.08 PSIA IN 240 SEC (ONE VALVE WITH FILTER) 5.0 TO 0.08 PSIA IN 180 SEC (ONE VALVE WITHOUT FILTER)				

EQUIPMENT	DATA
H/X	CABIN TEMP CONTROL IN NORMAL: CABIN TEMP = 75 ± 5°F
FAN(S)	5 LBS O_2/MIN/FAN AT 13,000 ± 250 RPM
FAN CONTROL SWITCH	CLOSE: <3.05 ± .05 PSIA OPEN: >3.15 ± .05 PSIA
	GLYCOL LOOPS
COOLANT	35% ETHYLENE GLYCOL AND 65% H_2O QUANTITY PRIME LOOP = 22 LBS QUANTITY SEC LOOP = 3.24 LBS NOMINAL FLOW RATE: 222 LBS/HR SPECIFIC HEAT = 0.866 BTU/LB -F° SLUSH POINT = -3°F
PUMP(S)	3.7 LBS/MIN AT 40°F AND INLET PRESS. OF 7 PSIA AND ΔP = 20 PSID SPEED = 5200 RPM DISCHARGE PRESS. = 40 PSIA
PUMP RELIEF VALVES	CRACK = 33 PSID, FULL OPEN = 39 PSID, RESEAT = 32 PSID
209 W/B	ESTIMATED NOMINAL IN/OUT TEMP RANGES (°F) HIGH: IN ____ OUT ____ LOW: IN ____ OUT ____ MAXIMUM CAPACITY = ____ BTU/HR MINIMUM LOAD (TO PREVENT FREEZE-UP) = ____ BTU/HR BREAKTHROUGH OCCURS IF: 1. INLET TEMP >____°F OR 2. H_2O PRESS. > APPROXIMATELY 12 TO 15 PSIA MINIMUM ALLOWABLE H_2O PRESS. = ____ PSIA

TABLE 6-IV.- ECS CONSUMABLES

TANK	VOLUME FT^3	CAPACITY				ACTUAL LOADING				RESIDUALS			
		QUANTITY		PRESSURE	TEMPERATURE	QUANTITY		PRESSURE	TEMPERATURE	QUANTITY		PRESSURE	TEMPERATURE
		LBS	%	PSIA	°F	LBS	%	PSIA	°F	LBS	%	PSIA	°F
DESC O_2	2.985	48.01	100	2875	87.5					0.89	1.9	50	40
A/1 O_2	0.495	2.41	100	900	104.0					0.37	1.5	75	40
A/2 O_2	0.495	2.41	100	900	104.0					0.37	1.5	75	40
DESC H_2O	7.120[1]	332	100[3]	44.5	80					21.2	6.4	7.1	
A/1 H_2O	0.910[1]	42.3	100[3]	43.0	80					2.65	6.3	6.4	
A/2 H_2O	0.910[1]	42.3	100[3]	43.0	80					2.65	6.3	6.4	

WATER AND OXYGEN FACTS AND FIGURES

METABOLIC LOADS[2]

1. OXYGEN = 0.082 TO 0.124 $\frac{LB}{MAN-HR}$
2. HEAT = 500 TO 760 $\frac{BTU}{MAN-HR}$
3. CO_2 PRODUCTION = 0.096 TO 0.146 $\frac{LB}{MAN-HR}$

OXYGEN USAGE (EXCEPT METABOLIC)

1. CABIN LEAK RATE 0.2 LB/HR (5 PSIA; 75°F)
2. SUIT LOOP LEAK RATE (WITHOUT SUITS) 0.01 LB/HR (3.7 PSIA; 70°F)
3. CABIN REPRESSURIZATION (TO 5.0 PSIA) 6.9 LB
4. PLSS FILL 0.91 LB AT 850 PSIA

HEAT CONVERSION

1. 1 KWH = 3413 BTU
2. 1 LB H_2O REJECTS ≃ 1040 BTU

WATER USAGE

1. PLSS FILL ≃ 7.3 LB
2. AVERAGE USAGE FOR HEAT REJECTION 6.5 TO 7.5 LB/HR

---

[1]THIS INCLUDES GAS (N_2) + WATER VOLUMN.

[2]THESE LOADS ASSUME ASTRONAUT WORK IN THE LM WHILE IN THE "CABIN" MODE.

[3]ANY WATER QUANTITY UP TO THIS FIGURE MAY BE LOADED AND THE MEASURING DEVICE ADJUSTED TO INDICATE 100%.

7 EXTRAVEHICULAR MOBILITY UNIT

ITEM	DR	CHGD	DATE	APPROVAL
A				

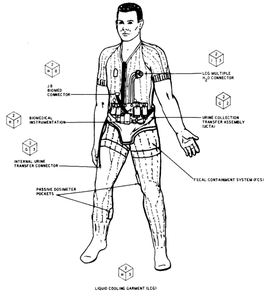

LIQUID COOLING GARMENT (LCG)

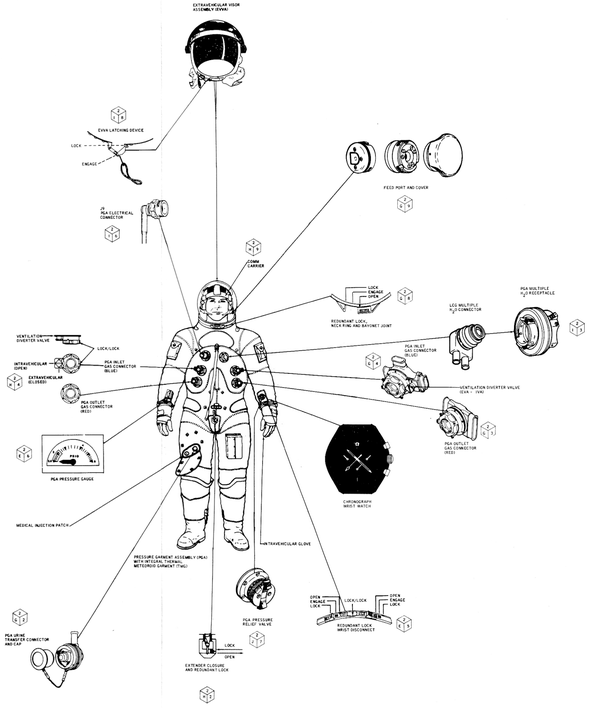

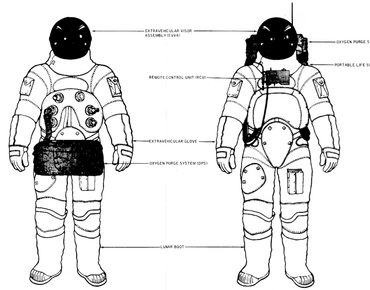

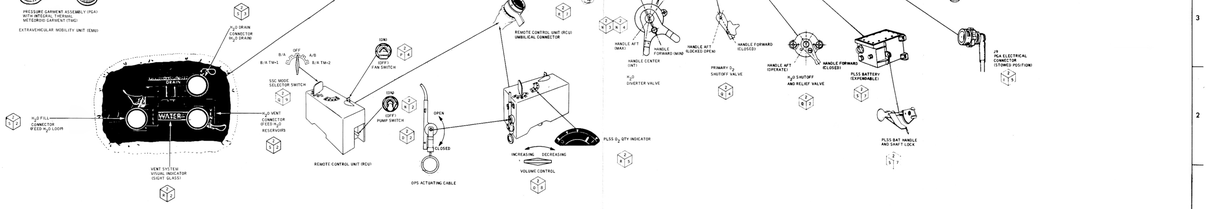

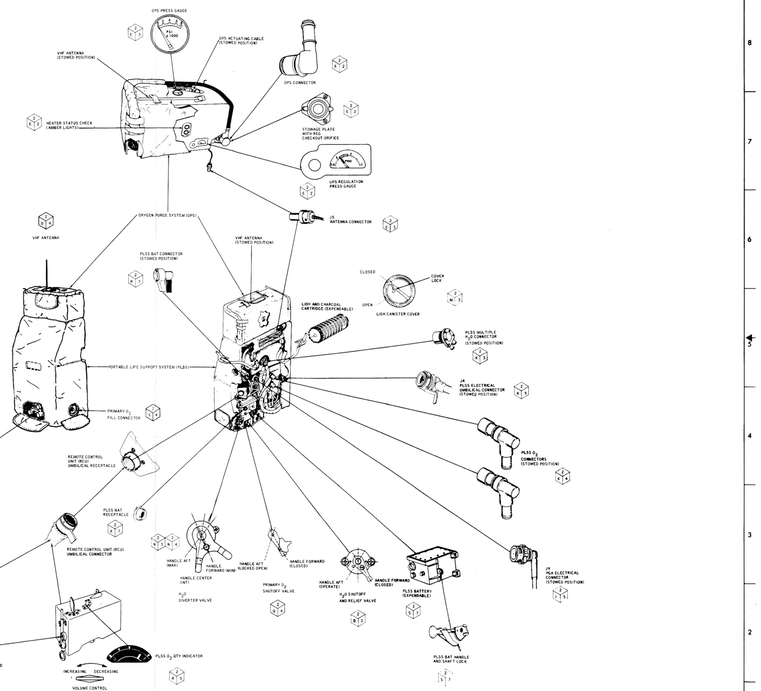

NATIONAL AERONAUTICS & SPACE ADMINISTRATION	SIGNATURES	DATE
MANNED SPACECRAFT CENTER HOUSTON, TEXAS	ILLUS [illegible]	7-1-69
EXTRAVEHICULAR MOBILITY UNIT CONTROL/DISPLAY	DSN [illegible]	7-1-69
	CHIEF [illegible]	7-1-69
	APP [illegible]	7-1-69
	APP [illegible]	7-1-69
DWG NO. FIGURE 7-1	SIZE J	LM LM-3
SHEET 1 OF 1 PAGE 7-1		

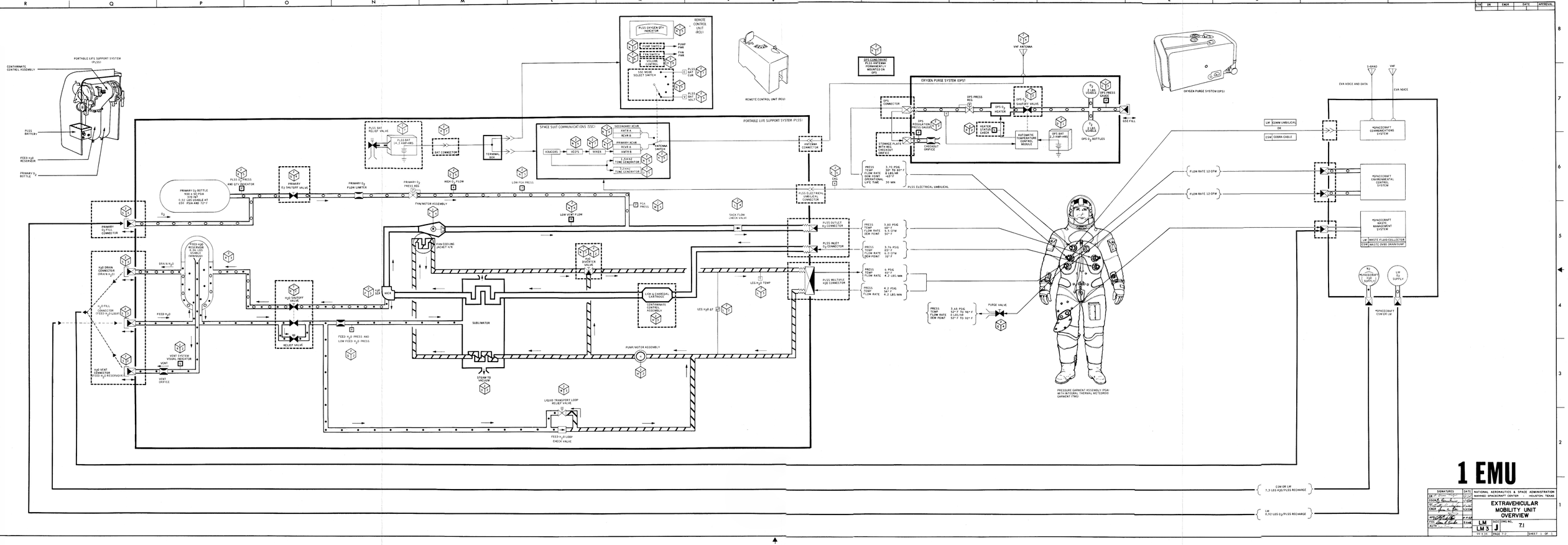

1 EMU

SIGNATURES	DATE
DR	
ENGR	
ENGR	
ENGR	
APPROVED	
FED	
ALTS	

NATIONAL AERONAUTICS & SPACE ADMINISTRATION
MANNED SPACECRAFT CENTER HOUSTON, TEXAS

EXTRAVEHICULAR MOBILITY UNIT OVERVIEW

CODE	LM	DRAWING NO.
	LM 3 J	7.1
	SCALE	SHEET 1 OF 1
	PAGE 7-2	

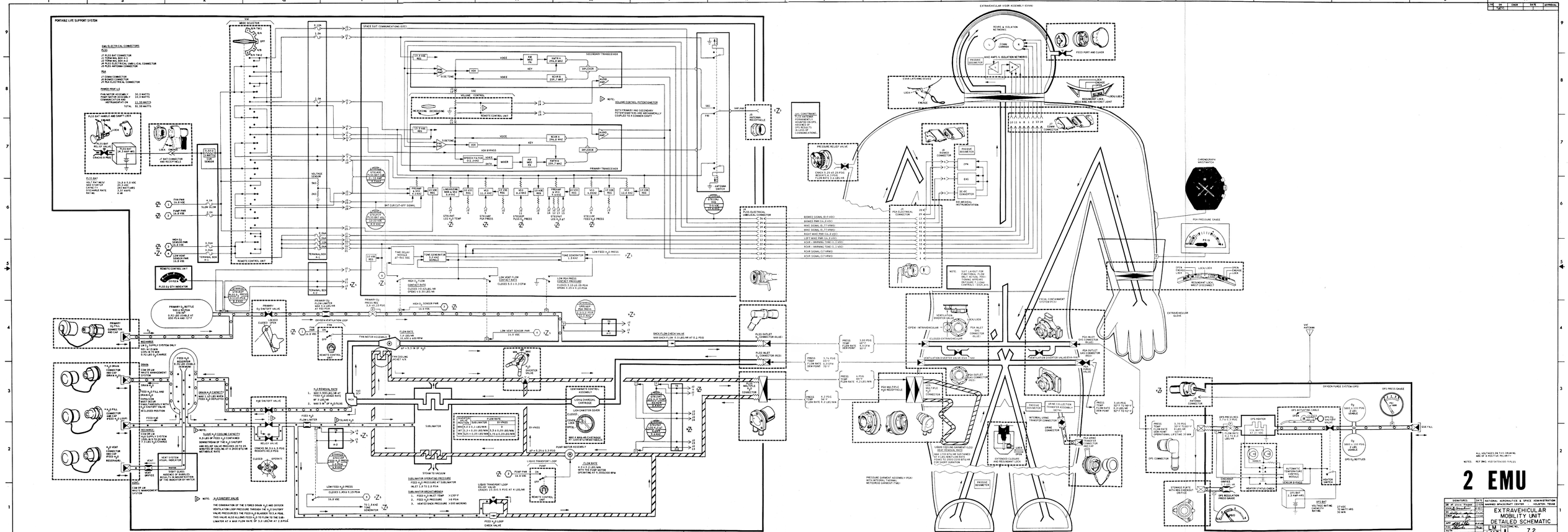
PORTABLE LIFE SUPPORT SYSTEM
EMU ELECTRICAL CONNECTORS
PLSS
J1 PLSS BAT CONNECTOR
J2 TERMINAL BOX A-2
J3 PLSS ELECTRICAL UMBILICAL CONNECTOR
J4 PLSS ANTENNA CONNECTOR
PLA
J1 COMM CONNECTOR
J2 PLA ANTENNA CONNECTOR
J3 PLA ELECTRICAL CONNECTOR
POWER PROFILE
FAN/MOTOR ASSEMBLY 30.0 WATTS
SPACE SUIT COMMUNICATIONS 10.0 WATTS
COMMUNICATION AND INSTRUMENTATION 11.58 WATTS
TOTAL 51.58 WATTS
PLSS BAT
VOLT RATING/CAP 16.8-8.5 VDC
MAX CURRENT 20.5 AMPS
MAX CONT DISCHARGE RATE 3.57 KWHRS
RATING 4 HR
PRIMARY O2 BOTTLE
900 ± 40 PSIA
6.93 LBS O2
6.93 LBS STORAGE AT 850 PSIA AND 72°F
SECONDARY O2 BOTTLE
900 ± 40 PSIA
0.93 LBS O2 STORAGE AT 850 PSIA AND 72°F
RECHARGE
LOW O2 SUPPLY SYSTEM ONLY
CONTAMINATION
0.92 LBS O2 CHARGE
O2 REMOVAL RATE
1.54 LBS/HR MAX
AT 3.3 LBS/HR
MIN 0.96 LB/HR AT 0.25 PSID
SUBLIMATOR OPERATING PRESSURE
FEED H2O PRESSURE AT SUBLIMATOR INLET 2.8 TO 3.2 PSIA
SUBLIMATOR BREAKTHROUGH
1. FEED H2O INLET TEMP >130°F
2. FEED H2O PRESSURE >9 PSIA
3. VENTED BACK PRESSURE >500 MICRONS
SUBLIMATOR CAPACITY
DURATION HOURS | FLOW RATE LBS/HR | SUBLIMATOR INLET TEMP °F
MAX 6.5 | 4.5-5.1 LBS/HR | 70-80
MIN 6.5 | 4.5-5.1 LBS/HR | 5.5-5.9
MAX 25.5 | 1.0-1.05 LBS/HR | 70-80
MIN 25.5 | 1.0-1.05 LBS/HR | 5.5-5.9
H2O REMOVAL RATE
1. MAX 0.308 LBS/HR AT 3.3 LBS/HR
2. MIN 0.96 LB/HR AT 0.25 PSID
CONTAMINATION CONTROL CARTRIDGE
100-G CHARCOAL CARTRIDGE
LOW CAPACITY
LIOH CARTRIDGE
LIOH CANISTER COVER
CLOSED
OPEN
SWITCH
LIOH CANISTER
LIOH CARTRIDGE
LIOH CANISTER COVER
CLOSED
OPEN
SWITCH
LIOH CARTRIDGE
LIOH CANISTER

* EXTRAVEHICULAR MOBILITY UNIT (EMU) NOTES

7.3 EMU MAJOR COMPONENTS

The EMU provides the extravehicular crewman with a habitable environment for the required 4-hour 4800 Btu design mission task. The EMU consists of the following major components: Pressure Garment Assembly (PGA) with integral Thermal Meteoroid Garment (TMG), Liquid Cooling Garment (LCG), Portable Life Support System (PLSS), Oxygen Purge System (OPS), Remote Control Unit (RCU), Extravehicular Visor Assembly (EVVA), and Waste Management System (WMS).

7.3.1 Pressure Garment Assembly (PGA) With Integral Thermal Meteoroid Garment (TMG)

The PGA consists of a helmet, torso and limb suit, gloves, and various controls and instrumentation to provide the crewman with a controlled environment. The garment is designed to be worn for 115 hours at a regulated pressure of 3.75 $\pm$ 0.25 psig in conjunction with either the LCG or CWG. The integral TMG protects the PGA against excessive thermal loads and meteoroid penetration.

7.3.1.1 Helmet.- The helmet is a detachable pressure enclosure with provisions for feeding and/or drinking, communications and EVVA interface.

A. The helmet feed port allows easy access of a probe for administering drinking water and/or food to the PGA crewman while the helmet is donned.

B. The comm carrier worn within the helmet provides redundant earphones and microphones for intravehicular and extravehicular communications.

C. The helmet has provisions for mounting the Extravehicular Visor Assembly (EVVA).

7.3.1.2 Torso and limb suit.- The torso and limb suit consists of a flexible pressure garment which encompasses the entire body, with the exception of the head and hands. This garment contains the necessary connectors and receptacles for the PLSS/PGA and ECS/PGA interface. The PGA connectors, with positive locking devices, can be connected and disconnected by an unassisted crewman.

A. Gas Connectors (4)

The PGA design provides an oxygen inlet and outlet connector on each side of the PGA front torso. The two inlet connectors are attached to a common manifold as are the two outlet connectors. An integral part to each oxygen inlet connector is the ventilation diverter valve.

B. PGA Multiple Water Receptacle (1)

This receptacle is mounted on the PGA torso and serves as the interface between the LCG multiple water connector and PLSS multiple water connector. A protective external cover provides PGA pressure integrity when the LCG multiple water connector has been removed from the PGA multiple water receptacle.

C. PGA Electrical Connector (1)

This connector, mated with spacecraft or PLSS electrical umbilical, provides a communication, instrumentation and power interface to the PGA.

D. PGA Urine Transfer Connector (1)

This connector is used to transfer urine from the Urine Collection Transfer Assembly (UCTA) to the spacecraft Waste Management System (WMS).

7.3.1.3 Gloves.- The intravehicular glove permits greater articulation of the hand and wrist than the extravehicular glove.

The extravehicular glove provides thermal and abrasive protection during extravehicular operations. The gauntlet of the extravehicular glove may be removed in an emergency to allow the greater articulation of the intravehicular glove.

7.3.1.4 Controls.- All PGA controls are accessible to the crewman during both intravehicular and extravehicular operations. The PGA controls consists of two ventilation diverter valves, a pressure relief valve with manual override, and a manual purge valve.

A. Ventilation Diverter Valve (2)
For intravehicular operations, the ventilation diverter valves are open, dividing the PGA inlet oxygen flow equally between the torso and helmet regions of the PGA. During extravehicular operation, the ventilation diverter valves are closed allowing the entire 6.0 cfm oxygen flow to enter the helmet.

B. Pressure Relief Valve (1)
This valve relieves at 5.25 $\pm$ 0.25 psig to protect the PGA from over-pressurization and reseats at 4.3 psig to maintain PGA pressure integrity. The valve is designed to accommodate flow from a failed open primary oxygen pressure regulator. In the event the valve fails open, it may be manually overridden closed.

C. Purge Valve (1)
The purge valve interfaces with the PGA through the PGA oxygen outlet connector. Manual activation of this valve initiates an 8 lb/hr purge flow rate providing CO_2 washout and minimum cooling during contingency or emergency operations.

7.3.1.5 Instrumentation.- A pressure transducer and gauge mounted on the right cuff provides the crewman with a PGA pressure readout.

The biomedical instrumentation consists of one EKG (heart) sensor, one ZPN (respiration rate) sensor, a dc-dc converter, and wiring harness. The ZPN is only operational with spacecraft telemetry systems.

The personal radiation dosimeter (active) is attached to the CWG or the integral TMG for continuous accumulative radiation readout. The chronograph wristwatch (elapsed time indicator) is also attached to the integral TMG and is readily accessible to the crewman for monitoring. Neither the personal radiation dosimeter or the chronograph wristwatch require an electrical interface with the EMU.

7.3.2 Liquid Cooling Garment (LCG)

During extravehicular operation, cooling is accomplished by the circulation of the coolant water through the LCG. The LCG consists of an open mesh garment, water manifold, multiple water connector, provisions for biomedical instrumentation, and water transport ducts. These transport ducts are divided into parallel flow paths providing maximum surface coverage for optimum cooling. The open mesh garment also allows evaporative cooling via the spacecraft ECS or PLSS oxygen systems. Normally, the LCG will be donned by the crewmen prior to entry into the LM. The LCG is operational only with the PLSS.

7.3.3 Extravehicular Visor Assembly (EVVA)

The EVVA is a detachable assembly which provides visual attenuation and thermal and meteoroid impact protection during extravehicular operations. The assembly consists of a visor shell and two polycarbonate plastic visors. A single crewman can attach or detach the EVVA from his helmet without the aid of tools. The two EVVA's are stowed onboard the LM.

7.3.4 Waste Management System (WMS)

Management of body waste is accomplished through the Fecal Containment System (FCS) and the Urine Collection Transfer Assembly (UCTA).

7.3.4.1 Fecal Containment System (FCS).- The FCS is an elastic undershorts with an absorbent liner worn during extravehicular operation. This system worn under the LCG allows defecation when PGA is pressurized.

7.3.4.2 Urine Collection Transfer Assembly (UCTA).- The UCTA is basically a rubberized bag used for collection and intermediate storage of urine. It is worn over the CWG or LCG and is connected by tubing to the PGA urine transfer connector.

7.3.5 Portable Life Support System (PLSS)

The PLSS is a self-contained, independently powered, rechargeable environmental control system. It consists of the Primary Oxygen Subsystem, Oxygen Ventilation Loop, Feedwater Loop, Liquid Transport Loop, Electrical Power Subsystem, and Space Suit Communications.

7.3.5.1 Primary Oxygen Subsystem.- This rechargeable subsystem provides regulated oxygen required for the Oxygen Ventilation Loop. The Primary Oxygen Subsystem consists of a primary oxygen bottle, recharge connector, primary oxygen regulator assembly, and associated instrumentation.

A. Primary Oxygen Bottle and Recharge Connector

The 378 cubic inch oxygen bottle contains 1.0 pound of usable oxygen at 900 psia and 65°F. This supply provides adequate makeup oxygen to satisfy 1200 Btu/hr metabolic load and total EMU leakage for a 4-hour excursion. Recharge time from a 900 $\pm$ 50 psig source at 0 to 60°F is 1 hour.

B. Primary Oxygen Regulator Assembly

The single stage primary oxygen regulator is designed to regulate the Oxygen Ventilation Loop to 3.90 ± 0.15 psig. A flow limiting orifice upstream of the regulator valve restricts flow to 3.6 lbs/hr to protect the PGA against over-pressurization in the event of a failed open regulator. All oxygen flow from the Primary Oxygen Subsystem is controlled by the manual activation of the primary oxygen shutoff valve.

C. Instrumentation

A high oxygen flow rate sensor activates the audible warning tone (3 kHz) when the flow rate exceeds 0.62 lbs/hr. The primary oxygen bottle contains a pressure transducer that provides separate signals for telemetry and crew visual readout. In addition, there are two independent pressure transducers to monitor status of the PGA pressure. One transducer is utilized for telemetry and the other is utilized to activate the audible warning tone (1.5 kHz) when the PGA pressure drops below 3.20 ± 0.05 psia.

7.3.5.2 Oxygen Ventilation Loop.- This closed loop system reconditions and recirculates oxygen through the PGA. The Oxygen Ventilation Loop consists of a contaminant control assembly, a section of the porous plate sublimator, water separator, fan/motor assembly, backflow check valve, PLSS oxygen connectors, and instrumentation.

A. Contaminant Control Assembly

This assembly contains an expendable LiOH and charcoal cartridge which filters foreign particles and removes carbon dioxide and odors from the Oxygen Ventilation Loop. The cartridges are rated at 1200 Btu/hr for a 4-hour operational lifetime. An additional cartridge is stowed in the LM ECS.

B. Sublimator and Water Separator

A section of the porous plate sublimator dissipates heat and condenses excess water from the Oxygen Ventilation Loop. The water separator removes the entrained water and directs the captured droplets to the drain water section of the feedwater reservoir. The maximum water separation rate is 0.508 lbs/hr at a feed H_2O usage rate of 3 lbs/hr.

C. Fan/Motor Assembly

A centrifugal type fan operating at 18,600 $\pm$ 600 rpm circulates oxygen at 6.0 cfm between the PLSS and PGA. The fan is powered by a 16.8 $\pm$ 0.8 Vdc brushless dc motor and creates a pressure rise of 5.3 ins of H_2O. The heat generated by the motor is transferred to the Liquid Transport Loop by the fan cooling jacket heat exchanger.

D. Backflow Check Valve

A backflow check valve located upstream of the PLSS O_2 inlet connector prevents backflow in excess of 0.5 lbs/hr into the PLSS during OPS purge operation.

E. PLSS Oxygen Connectors (2)

The PLSS oxygen connectors interface the Oxygen Ventilation Loop of the PLSS to the PGA inlet and outlet gas connectors.

F. Instrumentation

When the oxygen flow rate decreases below 5 $\pm$ 0.3 cfm, a low ventilation flow rate sensor activates the audible warning tone (3.0 kHz).

7.3.5.3 Liquid Transport Loop.- This recirculating loop provides thermal control of the EMU by dissipating heat through sublimation. The Liquid Transport Loop consists of a water fill connector, relief and check valve assembly, pump/motor assembly, water diverter valve, a section of the porous plate sublimator, and a multiple water connector.

A. Relief and Check Valve Assembly

Makeup water from the feedwater loop interfaces through a check valve on the inlet side of the Liquid Transport Loop. The relief valve on this assembly allows for thermal expansion in the Liquid Transport Loop by relieving to the feedwater loop when the back pressure becomes greater than 23.5 ± 0.5 psig.

B. Pump/Motor Assembly

A constant volume, vibrating diaphragm pump imparts a coolant flow rate of 4.0 ± 0.2 lbs/min through the Liquid Transport Loop. A 16.8 ± 0.8 Vdc brushless dc motor operating at 9,000 ± 300 rpm powers the pump creating a pressure rise of 5.25 ± 0.30 psig.

C. Water Diverter Valve

The manually operated three-way, three-position valve regulates the coolant flow rate through the sublimator which provides thermal control for the Liquid Transport Loop. In the minimum and intermediate positions, the valve diverts the flow allowing the majority of the water to bypass the sublimator. In maximum position, the entire flow passes through the sublimator before returning to he LCG.

Diverter Valve Position	Sublimator Flow Rate	Bypass Flow Rate
Max	4.0 ± 0.1 lbs/min	0
Int	0.5 ± 0.05 lbs/min	3.5 ± 0.05 lbs/min
Min	0.25 ± 0.05 lbs/min	3.75 ± 0.05 lbs/min

D. Sublimator

The porous plate sublimator, containing Liquid Transport Loop passages, provides thermal control through sublimation of ice.

E. PLSS Multiple Water Connector

This connector interfaces with the PGA multiple water receptacle providing a single PGA penetration with dual passages to the LCG.

F. Instrumentation

The Liquid Transport Loop has three individual temperature transducers that monitor via telemetry the LCG water inlet temperature and the LCG water differential temperature.

7.3.5.4 Feedwater Loop.- This rechargeable loop supplies expendable water to the sublimator and Liquid Transport Loop, stores condensation removed by the water separator and pressurizes the Liquid Transport Loop. The Feedwater Loop consists of reservoir, water fill, vent, and drain connectors, water shutoff and relief valve, sublimator, and instrumentation.

A. Feedwater Reservoir and Vent Connector

The reservoir is a bladder-type tank which provides a minimum of 8.06 pounds of expendable feedwater for sublimation. A maximum of 1.63 lbs of drain water from the water separator is stored in the volume between the reservoir housing and bladder. The combination of stored drain water and Oxygen Ventilation Loop pressure provides the necessary differential pressure to expel feedwater from the bladder. The bladder contains a vent line and visual indicator to assure complete removal of entrapped gas for a full charge.

B. Water Shutoff and Relief Valve

This manual valve allows feedwater to flow to the sublimator and when closed, acts as a pressure relief device for feedwater reservoir over-pressurization. The valve relieves at 58.5 $\pm$ 6.5 psig and reseats at 40.0 psig.

C. Water Fill and Water Drain Connector

These connectors allow access to both sides of the reservoir bladder to facilitate recharge and drain. Since the reservoir contains a bladder, both fill and drain operations are performed simultaneously. Recharge time from a 40 psig source is 15 minutes.

D. Sublimator

The sublimator transfers heat by conduction from the Liquid Transport Loop and the Oxygen Ventilation Loop cooling passages to the Feedwater Loop passages. The heat contained in the feedwater is then dissipated by the sublimation of ice.

E. Instrumentation

A pressure transducer provides both systems telemetry monitoring and activation of an audible warning tone (1.5 kHz) to identify sublimator breakthrough and feedwater reservoir low level.

7.3.5.5 Electrical Power Subsystem.- The Electrical Power Subsystem provides dc electrical power through the appropriate connectors to the Fan/Motor Assembly, the Pump/Motor Assembly, and communications and instrumentation. The power is supplied by a 16.8 $\pm$ 0.8 Vdc, 11 cell, silver-zinc alkaline battery with a capability of 14.3 amp-hrs. This provides 4 hours of nominal operation at 3.57 amps and 60 watts. Current limiters protect the electrical circuits against overcurrents. The LM has storage facilities for additional batteries.

A. Power Consumption Profile

SSC (including all transducers, indicators, and mikes)	11.55 watts
Pump	10.0 watts
Fan	30.0 watts

B. EMU Electrical Connectors

During EMU checkout and recharge, the crewman is required to make and break the following electrical connectors:

PLSS		PGA	
J-T	PLSS Battery Connector	J-7	Comm Connector
J-4	PLSS Electrical Umbilical Connector	J-8	Biomedical Connector
J-5	PLSS Antenna Connector	J-9	PGA Electrical Connector

The following two connectors interface the SSC with the two terminal boxes and do not require a crew action.

J-1 Terminal Box A-1

J-2 Terminal Box A-2

C. Current Limiters

These limiters will pass transient currents in excess of a normal load, but will open at sustained overload.

Primary Transceiver Pwr	2.0 amps
Secondary Transceiver Pwr	1.0 amps
Biomed Pwr	0.12 amps
Left Mike Pwr	0.06 amps
Right Mike Pwr	0.06 amps
Fan/Motor Assembly	4.0 amps (slow blow)
Pump/Motor Assembly	1.0 amps
High O_2 Flow Sensor	0.06 amps
Low Vent Flow Switch	0.06 amps
Tone Generators & O_2 Indicator	0.12 amps
Time Delay Module	0.06 amps

D. Instrumentation

The battery current and voltage transducers for the Electrical Power Subsystem share the same telemetry frequency. A manual switch activation of the mode selector switch on the Remote Control Unit determines which transducer output is being telemetered.

7.3.5.6 Space Suit Communicator (SSC).- The SSC provides primary and secondary duplex voice communication and physiological and environmental telemetry. This system consists of primary and

secondary duplex VHF-AM transceivers, transducers, Voltage Conditioning Oscillators (VCO's), a mixer for VCO coupling to the primary transmitter, two tone generators and associated controls, and a VHF antenna switch to connect the single antenna to either the primary or secondary transceiver.

A. Primary and Secondary Duplex VHF-AM Transceivers and Antenna

The primary duplex VHF-AM transceiver has the capability to downlink telemetry (see Table 7-I) and voice at 259.7 MHz and receive on 296.8 MHz. The secondary transceiver is identical to the primary transceiver with two exceptions; it transmits on 296.8 MHz, receives on 259.7 MHz and has no telemetry capability. Each transceiver has an independently regulated power supply of 13.5 Vdc. The power output of both the primary and secondary transceivers is 75 mW at the antenna terminals. All EMU data and voice must be relayed through the LM or CSM and downlinked via S-Band (see Table 7-II). The VHF antenna is permanently mounted on the Oxygen Purge System (OPS) and absence of the OPS results in loss of EMU communications.

B. Voltage Conditioning Oscillators (VCO's) and Mixer

The seven VCO's have an independently regulated power supply of 10 Vdc. The center frequency deviations of the VCO's are proportional to the changes of the dc output voltage from the transducers. Each individual VCO output is coupled at the mixer for telemetry transmission.

C. Controls

1. Volume Control

Both primary and secondary volume control potentiometers are mechanically coupled to a common shaft and are located on the Remote Control Unit (RCU).

TABLE 7-I.- TELEMETRY

MEASUREMENT ID*	MEASUREMENT TITLE	INSTRUMENTATION RANGE	CENTER FREQUENCY	DEVIATION (Hz)
GT8110P	FEEDWATER PRESSURE	0 - 5.0 PSIG	11.0 kHz	±330
GT8124J	EKG	0 - 5.0 VOLTS	12.4 kHz	±372
GT8140C	PLSS BAT. CUR	0 - 10 AMPS	4.0 kHz	±200
GT8141V	PLSS BAT. VOLT	12 - 22 VOLTS	4.0 kHz	±200
GT8154T	LCG H_2O TEMP	40 - 90 DEG F	5.4 kHz	±270
GT8168P	PGA PRESSURE	2.5 - 5.0 PSIA	6.8 kHz	±340
GT8182P	PLSS O_2 PRESSURE	0 - 1110 PSIA	8.2 kHz	±410
GT8196T	LCG H_2O ΔT	0 - 15 DEG F	9.6 kHz	±384

*All of the Measurement ID's are reflected in the GAEC Measurement List under GT9991U Space Suit/PLSS MPX output.

GT9991U is composed of the following parameters:

GT8140J

GT8154J

GT8168J

GT8182J

GT8196J

GT8110J

GT8124J

LM/CM/EMU

EMU

LM

CSM

COMMUNICATIONS CONFIGURATION	PRI S/C RELAY	CSM CREW STATION	LM CREW STATION	SPACECRAFT RELAY MODE	VOF'N DOWNLINK	FREQUENCY SPECTRUM	EMU LOW VOICE MODE SEL SWITCH	MCVR 1 OFF VOX PTT	MCVR 2 OFF VOX PTT	LV 1 OFF VOX PTT	LV 2 OFF VOX PTT	LV 3 OFF VOX PTT	LV 4 OFF VOX PTT	VOX SENS	PTT	CDR PILOT 1-WAY	CDR PILOT 2-WAY	CDR PILOT VHF A	CDR PILOT VHF B	CDR PILOT CRYO CNTRL	CDR PILOT PWR AMP	CDR PILOT RELAY	S-BAND ANT SEL	S-BAND XMTR	MODE CONTROL	PCM/VOICE	LEFT OR RIGHT	IN OR OUT	IN FLIGHT	VHF ANTENNA TRANSFER SWITCH	INTERCOM VOX MODE SEL	INTERCOM VOX SENS	PTT	S-BAND ANT SEL	S-BAND XMTR	MODE CONTROL	PCM/VOICE	LEFT OR RIGHT	IN OR OUT	IN FLIGHT	VHF ANTENNA TRANSFER SWITCH	VHF ANTENNA
								13510 MCVR 1 XMTR	13511 MCVR 2 XMTR	13512 LV 1 XMTR	13513 LV 2 XMTR	13514 LV 3 XMTR	13515 LV 4 XMTR	13516 CMD PILOT VOX SENS	13517 CMD PILOT PTT	13518 CMD PILOT 1-WAY	13519 CMD PILOT 2-WAY	13520 CMD PILOT VHF A	13521 CMD PILOT VHF B	13522 CMD PILOT CRYO CNTRL	13523 CMD PILOT PWR AMP	13524 CMD PILOT RELAY	13525 S-BAND ANT SEL	13526 S-BAND XMTR	13527 MODE CONTROL	13528 PCM/VOICE	13529 LEFT OR RIGHT	13530 IN OR OUT	13531 IN FLIGHT	13532 VHF ANTENNA TRANSFER SWITCH	13533 INTERCOM VOX MODE SEL	13534 INTERCOM VOX SENS	13535 PTT	13536 S-BAND ANT SEL	13537 S-BAND XMTR	13538 MODE CONTROL	13539 PCM/VOICE	13540 LEFT OR RIGHT	13541 IN OR OUT	13542 IN FLIGHT	13543 VHF ANTENNA TRANSFER SWITCH	13544 VHF ANTENNA
1	LM	CDR CMP LMP	CDR	LEFT AUDIO CENTER RELAY	LM VOICE LM PCM LM BIOMED EMU VOICE & VP/A RANGE OR TV	LM FM OR FM (232.3 MHZ) LM VOICE 1.25 KHZ LM PCM 72 KBPS LM BIOMED EMU VOICE 4.5 KHZ 1.25 KHZ 4.5 KHZ 1.25 KHZ	1,2 OR 5	ON	ON	OFF	HOLD	RCV	T/R	T/R	OFF	OFF	NORM	FB/HI OR SEC	FB/HI OR SEC	OFF	OFF	PCM	LEFT OR RIGHT	IN OR OUT	IN FLIGHT	OMNI	T/R	T/R	T/R	DUPLEX A	RCV OR VOX	FB/HI OR SEC	OFF	T/R	T/R	DATA OR UP VOICE	NORM	OMNI
2	LM	CDR CMP LMP	CDR	CDR AUDIO CENTER RELAY	LM VOICE LM PCM LM BIONED EMU VOICE & DATA RANGE OR TV	LM FM OR FM (232.3 MHZ) LM VOICE 1.25 KHZ LM PCM 72 KBPS LM BIONED EMU VOICE & DATA 4.5 KHZ 1.25 KHZ 4.5 KHZ 1.25 KHZ	1,2 OR 5	ON	ON	OFF	T/R	OFF	HOLD	RCV	T/R	BU	OFF	FB/HI OR SEC	FB/HI OR SEC	OFF	OFF	PCM	LEFT OR RIGHT	IN OR OUT	IN FLIGHT	OMNI	T/R	T/R	T/R	NORM	RCV OR VOX	FB/HI OR SEC	OFF	T/R	T/R	DATA OR UP VOICE	NORM	OMNI
3	LM	CDR CMP LMP	CDR	LMP AUDIO CENTER RELAY	LM VOICE LM PCM LM BIONED EMU VOICE & DATA	LM FM (232.3 MHZ) LM VOICE 1.25 KHZ LM PCM 72 KBPS LM BIONED EMU VOICE & DATA 4.5 KHZ 1.25 KHZ 4.5 KHZ 1.25 KHZ	1,2 OR 5	ON	ON	OFF	HOLD	RCV	T/R	T/R	OFF	OFF	NORM	FB/HI OR SEC	FB/HI OR SEC	FM	OFF	OFF	PCM	LEFT OR RIGHT	IN OR OUT	IN FLIGHT	OMNI	T/R	T/R	T/R	DUPLEX A	RCV OR VOX	FB/HI OR SEC	OFF	T/R	T/R	DATA OR UP VOICE	NORM	OMNI
4	LM	CDR CMP LMP	CDR	CDR AUDIO CENTER RELAY	LM VOICE LM PCM LM BIONED EMU VOICE & DATA	LM FM (232.3 MHZ) LM VOICE 1.25 KHZ LM PCM 72 KBPS LM BIONED EMU VOICE & DATA 4.5 KHZ 1.25 KHZ 4.5 KHZ 1.25 KHZ	1,2 OR 5	ON	ON	T/R	OFF	HOLD	RCV	T/R	BU	BU	OFF	FB/HI OR SEC	FB/HI OR SEC	FM	OFF	OFF	PCM VOICE BU	LEFT OR RIGHT	IN OR OUT	IN FLIGHT	OMNI	T/R	T/R	T/R	DUPLEX A	RCV OR VOX	FB/HI OR SEC	OFF	T/R	T/R	DATA OR UP VOICE BU	NORM	OMNI
5	LM	CDR CMP LMP	CDR	CDR AUDIO CENTER RELAY	LM VOICE LM PCM LM BIONED EMU BACKUP VOICE	EMU BACKUP VOICE TRANSMITTED FM (A) OR ON 1.25 MHZ OR ON THE BASE BAND (1.3-3.3 KHZ	4	ON	ON	VOICE	OFF	T/R	OFF	RCV	T/R	BU	BU	FB/HI OR SEC	FB/HI OR SEC	FM	OFF	OFF	PCM VOICE BU	LEFT OR RIGHT	IN OR OUT	IN FLIGHT	OMNI	T/R	T/R	T/R	NORM	B DATA OR AUX	FB/HI OR SEC	OFF	T/R	T/R	DATA OR UP VOICE BU	NORM	OMNI
6	LM	CDR CMP LMP	CDR	LMP AUDIO CENTER RELAY	LM VOICE LM PCM LM BIONED EMU BACKUP VOICE	EMU BACKUP VOICE TRANSMITTED FM ON 1.25 MHZ OR ON THE BASE BAND (1.3-3.3 KHZ	4	ON	ON	VOICE	RCV	T/R	OFF	RCV	T/R	BU	OFF	FB/HI OR SEC	FB/HI OR SEC	FM	OFF	OFF	PCM VOICE BU	LEFT OR RIGHT	IN OR OUT	IN FLIGHT	OMNI	T/R	T/R	T/R	NORM	B DATA OR AUX	FB/HI OR SEC	OFF	T/R	T/R	DATA OR UP VOICE BU	NORM	OMNI
7	CSM	CDR CMP LMP	CDR	CMP AUDIO CENTER RELAY	CSM VOICE CSM PCM CSM BIONED EMU VOICE & DATA	CSM FM (237.1 MHZ) CSM VOICE 1.25 KHZ CSM PCM 72 KBPS CSM BIONED EMU VOICE & DATA 4.5 KHZ 1.25 KHZ 4.5 KHZ 1.25 KHZ	1,2 OR 5	ON	ON	VOICE	RCV	T/R	RCV	T/R	OFF	OFF	NORM	FB/HI OR SEC	FB/HI OR SEC	FM OR PM	OFF	ON	PCM VOICE	LEFT OR RIGHT	IN OR LO	IN FLIGHT	OMNI	VOX	T/R	T/R	BACKUP	DUPLEX	B DATA OR AUX	NORM OR AUX	FB/HI OR SEC	FB/HI OR SEC	FM OR PM	OFF	ON	PCM	LEFT OR RIGHT	IN OR LO	RELAY	OMNI
8	CSM	CDR CMP LMP	CDR	CMP AUDIO CENTER RELAY	CSM VOICE CSM PCM CSM BIONED EMU BACKUP VOICE	CSM FM (237.1 MHZ) CSM VOICE 1.25 KHZ CSM PCM 72 KBPS CSM BIONED EMU VOICE & DATA 4.5 KHZ 1.25 KHZ 4.5 KHZ 1.25 KHZ	4	ON	ON	VOICE	RCV	T/R	OFF	T/R	OFF	OFF	NORM	FB/HI OR SEC	FB/HI OR SEC	FM OR PM	OFF	ON	PCM VOICE	LEFT OR RIGHT	IN OR LO	IN FLIGHT	OMNI	VOX	T/R	T/R	BACKUP	DUPLEX	B DATA OR AUX	NORM OR AUX	FB/HI OR SEC	FB/HI OR SEC	FM OR PM	OFF	ON	PCM	LEFT OR RIGHT	IN OR LO	RELAY	OMNI

*VHF RCVR LEFT IN RCVR UNTIL TRANSMISSION, THEN SWITCH IS TOGGLED TO T/R

SELECTION OF EITHER PM OR FM RESULTS IN EITHER RANGE OR TV

POSITIONS 1 & 5 PROVIDES EMU TELEMETRY, POSITION 2 VOICE ONLY

TABLE 7-II.- LM/CSM/EMU COMMUNICATION CONFIGURATIONS

LM - EVA S-BAND RELAY

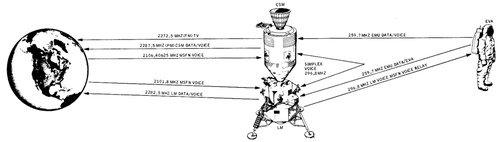

VHF/AM COMM MODES

FROM	TO	VHF MODE	INFORMATION	FREQ MHZ XMIT	FREQ MHZ REC	REMARKS
LM OR CSM	EVA	DUPLEX A	VOICE	296.8	259.7	
EVA	LM OR CSM	DUPLEX B	VOICE	259.7	296.8	
LM OR CSM	EVA (SSE)	DUPLEX B	VOICE	259.7	296.8	
EVA (SSE)	LM OR CSM	DUPLEX A	VOICE	296.8	259.7	
MSFN	CSM/EVA OR LM/EVA	DUPLEX A	VOICE	296.8	259.7	VIA S-BAND RELAY MODE
EVA-CSM OR EVA-LM	MSFN	DUPLEX B	EMU DATA VOICE	259.7	296.8	VIA S-BAND RELAY MODE
MSFN	CSM/EVA OR LM/EVA (SSE)	DUPLEX A	VOICE	296.8	259.7	VIA S-BAND RELAY MODE
EVA-CSM OR EVA-LM (SSE)	MSFN	DUPLEX B	EMU VOICE	259.7	296.8	VIA S-BAND RELAY MODE

CSM-EVA S-BAND RELAY

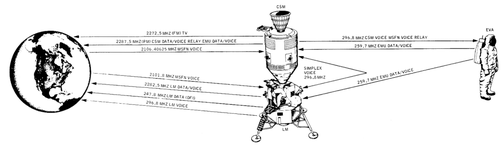

LM PREMOD PROCESSOR

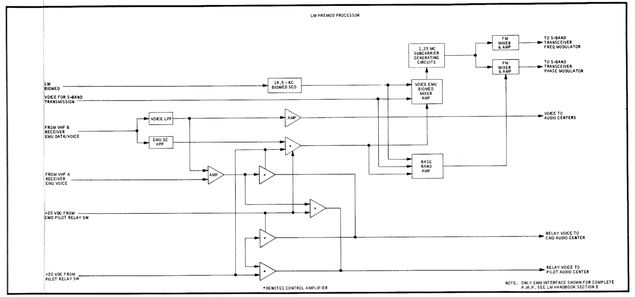

CSM PREMOD PROCESSOR

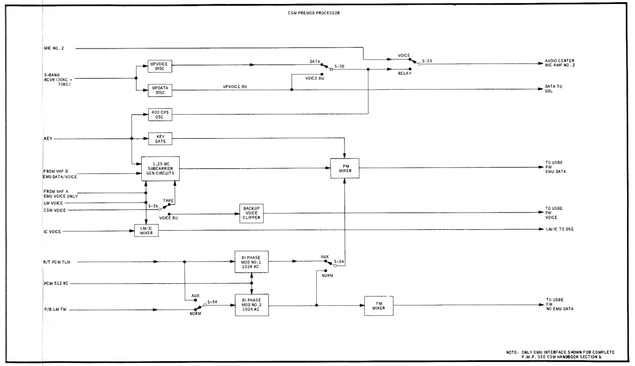

2. SSC Mode Selector Switch

Operation of the SSC is accomplished by manual selection of the five-position mode selector switch on the Remote Control Unit (RCU). The five modes of operation are as follows:

a. Switch Position 1 (B/A TM-1) is the normal operation mode, permitting both voice and telemetry transceiver operation. This position allows battery current to be telemetered by positioning the mode select switch for telemetry transmission; the Voice Operated Switch (VOX) is bypassed establishing a hot-mike mode.

b. Switch Position 2 (B/A) energizes the primary transceiver. The primary receiver is continually operative and the primary transmitter inoperative unless activated by the VOX. This mode has no telemetry.

c. Switch Position 3 (OFF) is the OFF position and removes power from all communication and instrumentation.

d. Switch Position 4 (A/B) energizes the secondary transceiver. The secondary receiver is continually operative and the secondary transmitter inoperative unless activated by the VOX. This mode has no telemetry.

e. Switch Position 5 (B/A TM-2) is functionally identical to Position 1, with the exception that battery voltage is telemetered rather than battery current.

D. Tone Generators (2)

The two warning tone generators (3.0 kHz and 1.5 kHz) and microphones are common to all active mode selector switch

positions. These tone generators outputs are coupled directly to the communications cap receiver and isolation networks, and are turned on automatically by the high O_2 flow, low feed H_2O pressure, low vent flow, or low PGA pressure. Both tones are readily distinguishable when activated simultaneously.

E. Instrumentation

The oxygen quantity indicator receives power from a 10 Vdc regulator in all active mode selector switch positions.

7.3.5.7 Remote Control Unit (RCU).- The Remote Control Unit is a chest-mounted instrumentation and control unit which provides the crewman with easy access to controls and displays. These controls and displays consist of: Fan Switch, Pump Switch, SSC Mode Selector Switch, Volume Control, PLSS oxygen quantity indicator, and an interface for the OPS actuator.

7.3.5.8 Oxygen Purge System (OPS).- This system is a self-contained, independently-powered, high-pressure, non-rechargeable emergency oxygen system which provides 30 minutes regulated purge flow. The system consists of two interconnected spherical high-pressure OPS oxygen bottles, automatic temperature control module, OPS pressure regulator assembly, OPS battery, OPS oxygen connectors, and necessary checkout instrumentation. In the normal EVA configuration, the OPS is mounted on top of the PLSS and is used in conjunction with PLSS systems during emergency operations. In the contingency EVA configuration, the CPS is attached to the PGA front lower torso and functions independently of the PLSS. The OPS has no communications capability but provides a hard mount for the SSC VHF antenna. Two OPS's are stowed aboard the LM.

A. OPS Oxygen Bottles (2)

The OPS oxygen bottles contain a total of 4 lbs of usable oxygen at 5880 ± 100 psig. This supply provides a 30-minute operational lifetime at an 8 lb/hr purge flow rate.

B. OPS Oxygen Pressure Regulator Assembly

This single-stage variable orifice regulator regulates PGA inlet oxygen pressure to 3.70 ± 0.30 psig. The regulator has an inline heater and automatic temperature control module to offset the adiabatic expansion cooling of the oxygen and to maintain PGA inlet oxygen temperature between 30 and 80°F. The manual OPS oxygen shutoff valve is mechanically coupled to the heater switch.

C. OPS Battery

The battery supplies 27 Vdc to the 116-watt heater and automatic temperature control module and is rated at 2.5 amp-hrs.

D. OPS Oxygen Connectors

The OPS connector interfaces with the PGA inlet gas connector in the operational configuration. The GSE fill connector is utilized only for initial ground change.

E. Instrumentation

Both the regulator and heater have pre-operational checkout systems. The OPS pressure gauge monitors the interconnected OPS oxygen bottles' source pressure and is used for both ground fill and pre-operational checkout. The OPS regulation pressure gauge verifies regulated flow through an 0.3 lbs/hr rated orifice mounted on the stowage plate. The heater circuitry is given a status check prior to egress by a momentary contact switch which monitors continuity through the illumination of an amber light.

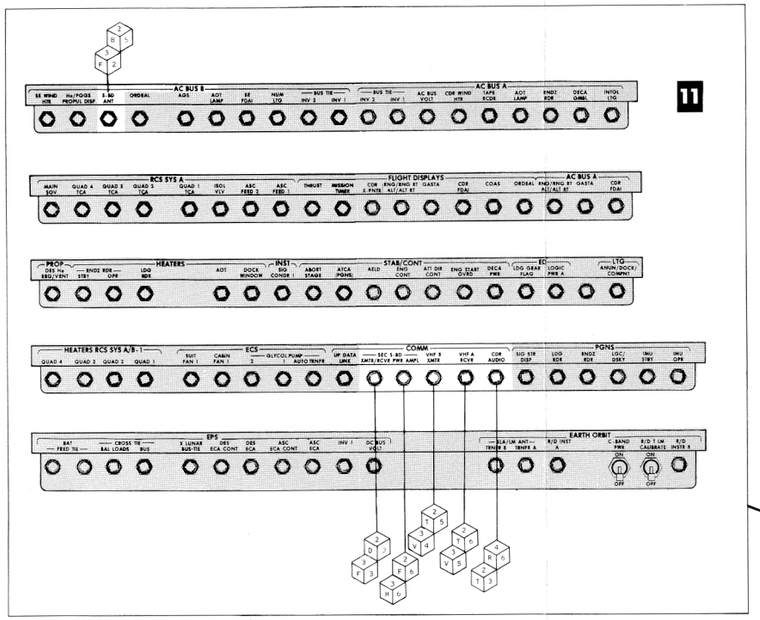

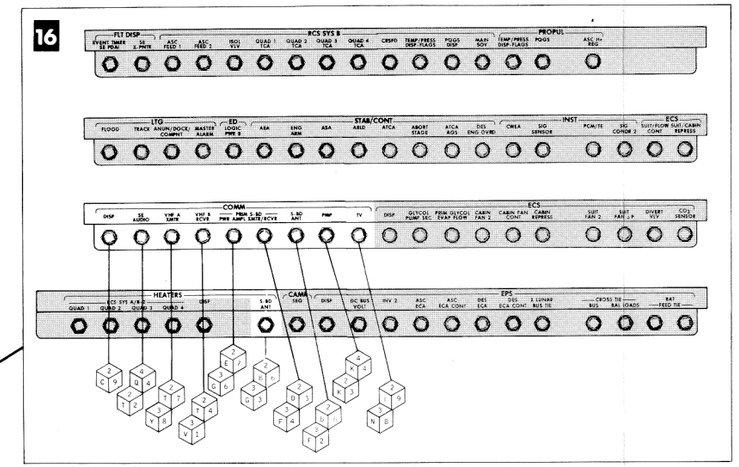

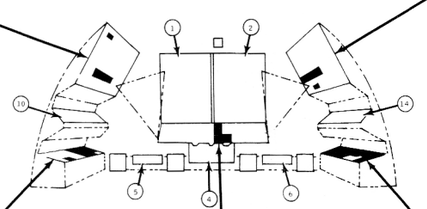

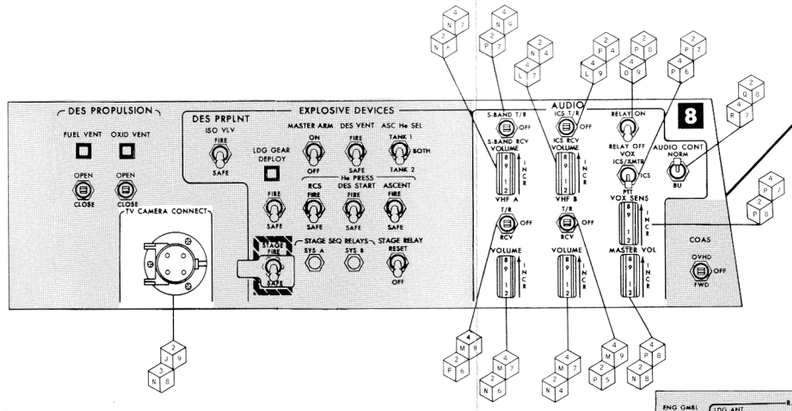

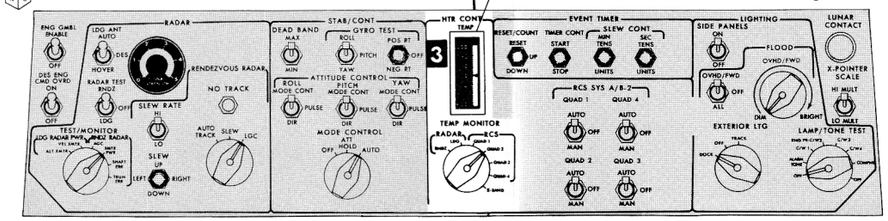

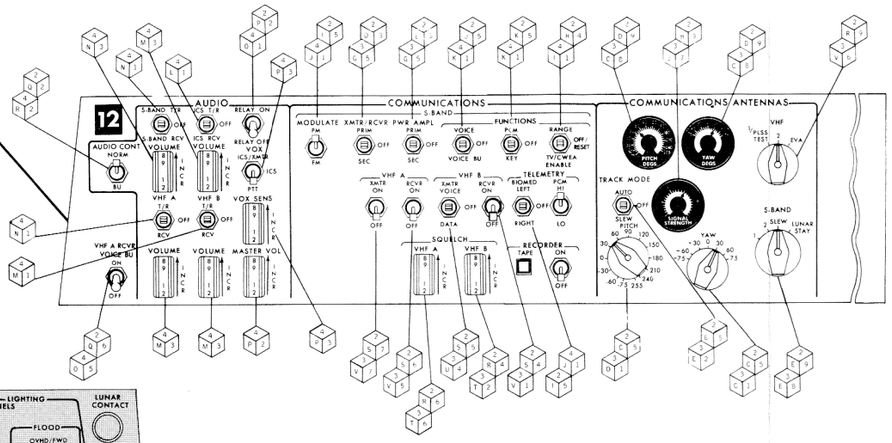

NATIONAL AERONAUTICS & SPACE ADMINISTRATION MANNED SPACECRAFT CENTER • HOUSTON, TEXAS	SIGNATURES	DATE
	DR	
	DSGN	
COMMUNICATIONS CONTROL / DISPLAY	QC	
	ENGR	
	APD	
	FEC	
	AUTH	
DWG NO. FIGURE 8-1	SIZE LM / LM-3	
SHEET 1 OF 1 PAGE 8-1	60.50 X 34	

LTR	DR	ENGR	DATE	APPROVAL

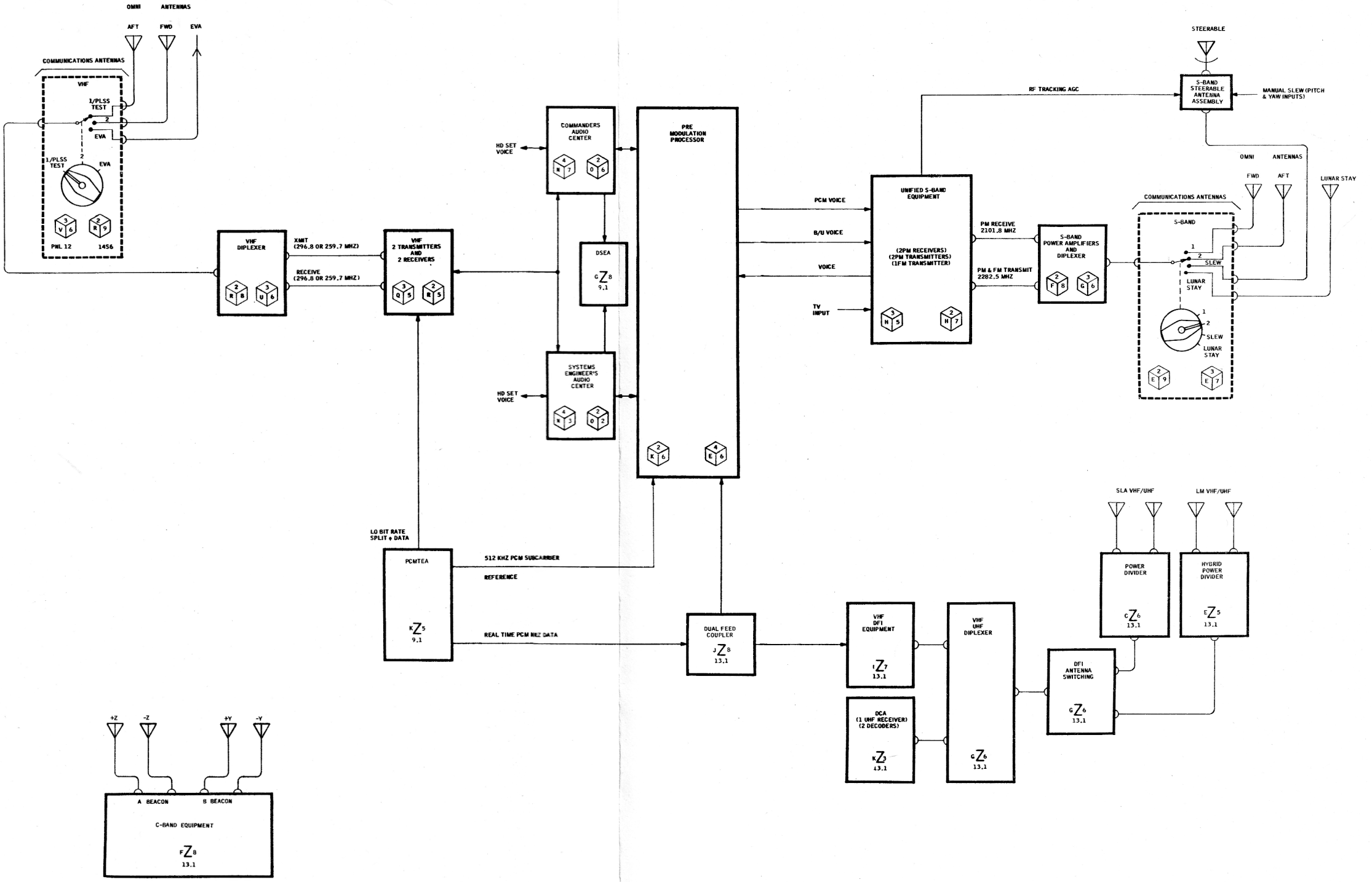

1 COMM

SIGNATURES	DATE
DR C JOHNSON	3-25-68
DSGN W. P. Bunch	3-25-68
QC [illegible]	4-1-68
ENGR [illegible]	3/21/68
APP [illegible]	4/3/68
FEC [illegible]	4-4-68
AUTH [illegible]	4-8-68

NATIONAL AERONAUTICS & SPACE ADMINISTRATION
MANNED SPACECRAFT CENTER · HOUSTON, TEXAS

COMMUNICATIONS OVERVIEW

LM	SIZE	DWG NO.
LM-3	E	8.1
44 X 34	PAGE 8-2	SHEET 1 OF 1

MSC Form 1618 E (REV OCT 65)

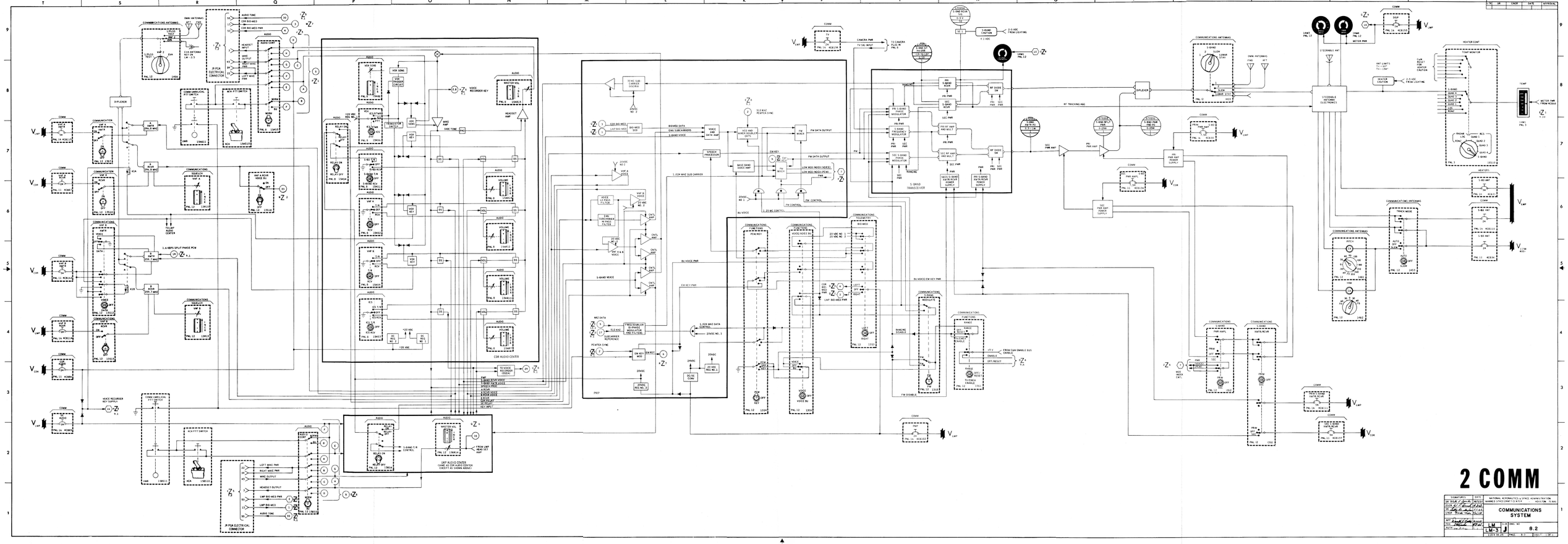
2 COMM
COMMUNICATIONS SYSTEM
LM-3
8.2

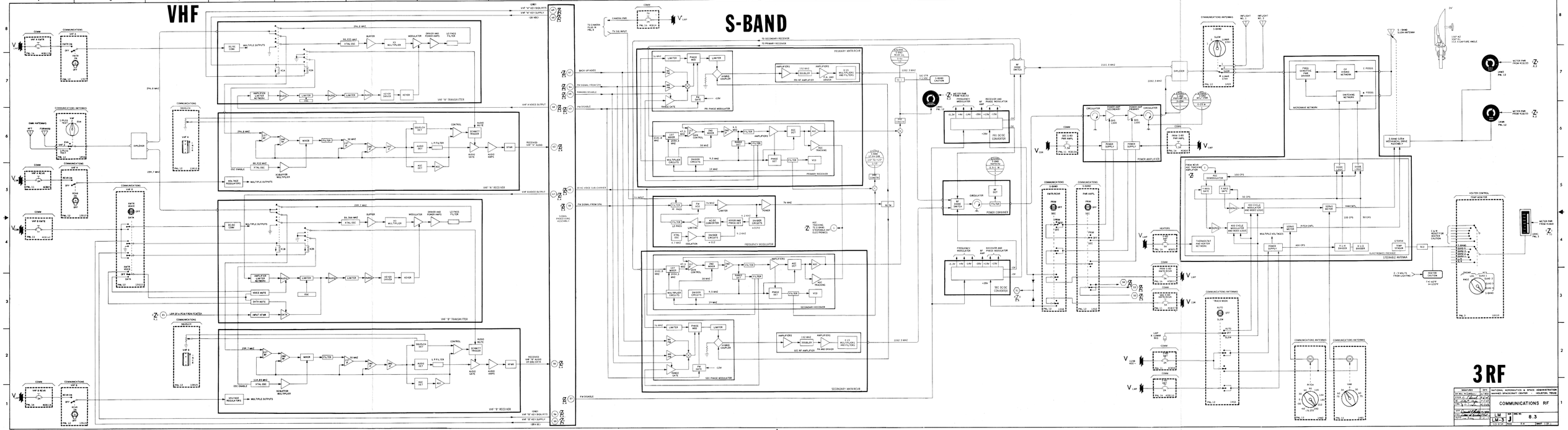
VHF
S-BAND
3RF
VHF "A" RECEIVER
VHF "B" RECEIVER
VHF "A" TRANSMITTER
VHF "B" TRANSMITTER
PRIMARY MASTER/RCVR
SECONDARY MASTER/RCVR
PRI PHASE MODULATOR
SEC PHASE MODULATOR
PRIMARY RECEIVER
SECONDARY RECEIVER
FREQUENCY MODULATOR
POWER AMPLIFIER
DIPLEXER
COMMUNICATIONS ANTENNAS
MICROWAVE NETWORK
ELECTRONICS PACKAGE
HEATER CONTROL
COMMUNICATIONS RF
NATIONAL AERONAUTICS & SPACE ADMINISTRATION
MANNED SPACECRAFT CENTER
HOUSTON, TEXAS
LM
LM-3
8.3

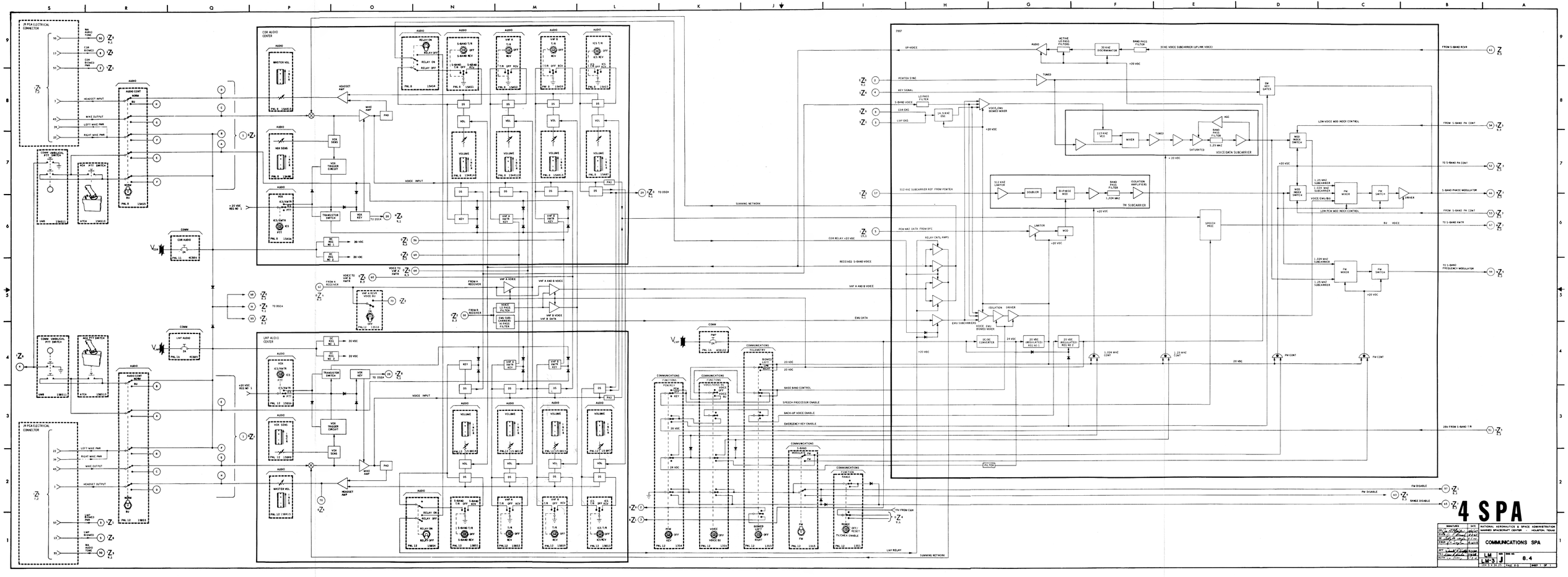
4 SPA
COMMUNICATIONS SPA
NATIONAL AERONAUTICS & SPACE ADMINISTRATION
MANNED SPACECRAFT CENTER - HOUSTON, TEXAS
LM LM-3
SIZE J
DRAWING NO. 8.4
SHEET 1 OF 1
JR PCA ELECTRICAL CONNECTOR
CDR AUDIO CENTER
LMP AUDIO CENTER
PREP
S-BAND T/R
VHF A T/R
VHF B T/R
ICS T/R
AUDIO CONT
MASTER VOL
VOX SENS
VOX TRIGGER CIRCUIT
VOX KEY
MIKE AMP
HEADSET AMP
TRANSISTOR SWITCH
VOLUME
RELAY ON
RELAY OFF
T/R OFF RCV
S-BAND RCV
VHF A RCV
VHF B RCV
ICS RCV
VOICE INPUT
SUMMING NETWORK
RECEIVED S-BAND VOICE
VHF A AND B VOICE
EMU DATA
UP-VOICE
PCM/TDM SYNC
KEY SIGNAL
S-BAND VOICE
CDR EXG
LMP EXG
512 KHZ SUBCARRIER REF FROM PCM/TDM
PCM MAC DATA FROM DFC
CDR RELAY +20 VDC
30 KHZ VOICE SUBCARRIER (UPLINK VOICE)
LOW VOICE MOD INDEX CONTROL
TO S-BAND PA CONT
S-BAND PHASE MODULATOR
FROM S-BAND PA CONT
TO S-BAND FM/TR
TO S-BAND FREQUENCY MODULATOR
20W FROM S-BAND T/R
FM DISABLE
RANGE DISABLE
VOICE/DATA SUBCARRIER
TM SUBCARRIER
SPEECH PROC
COMMUNICATIONS FUNCTIONS
COMMUNICATIONS TELEMETRY
COMMUNICATIONS S-BAND MODULATOR T/R
COMMUNICATIONS FUNCTION RANGE
BASE BAND CONTROL
SPEECH PROCESSOR ENABLE
BACK-UP VOICE ENABLE
EMERGENCY KEY ENABLE
LMP RELAY
FILTER

COMMUNICATIONS NOTES

S-Band

A.	Transceiver Power Requirements	36 watts
B.	Receiver Characteristics	
	1. Phase Lock Receiver	
	2. Frequency	2101.8 MHz
	3. Sensitivity	-127 dbm
C.	Transmitter Characteristics	
	1. Modulation	PM or FM
	2. Frequency	FM 2282.5 MHz PM $\frac{240}{241} F_R$ MHz
	3. RF Power Output	0.75 to 1.5 watts
D.	Power Amplifier Characteristics	
	1. Type	Amplitron (QKS 1300)
	2. RF Drive Level	0.72 watts (min)
	3. RF Power Output (pri)	20 watts
	4. Power Input	68.6 watts

E. The application of dc power to the primary or secondary power amplifier power supply will start an automatic 20 second warmup sequence. After the warmup period, -1800 vdc is applied to the amplitron enabling the tube to lock on the input rf signal. If the amplitron fails to lock, the power supply will automatically revert to the warmup mode and the cycle will be repeated. The maximum warmup time for a power amplifier is 60 seconds.

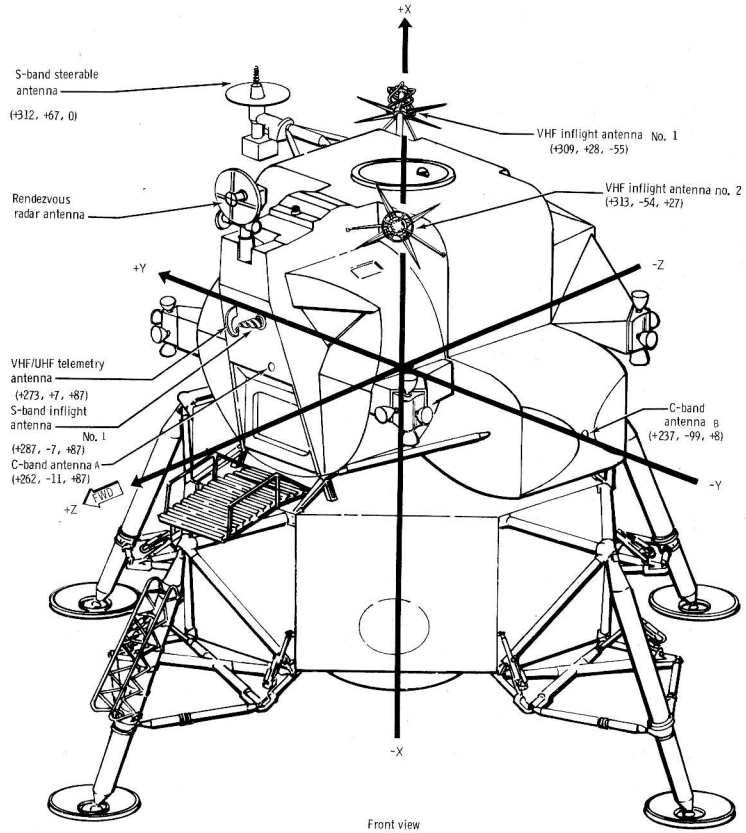

Front view

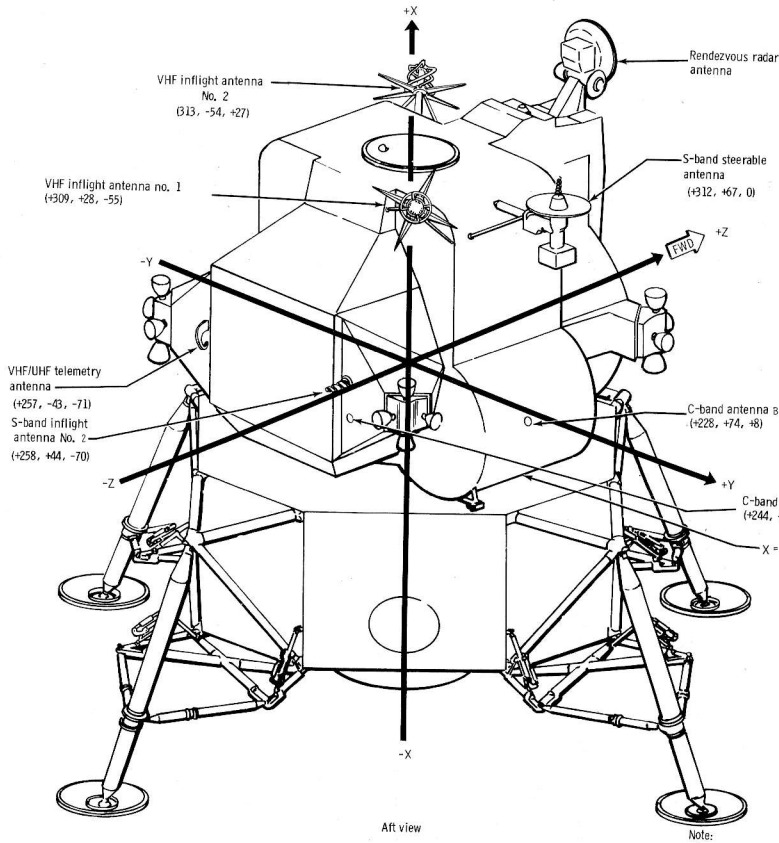

Aft view

Note:
All antenna location coordinates are given in inches, rounded off to the nearest inch, and are given in the following order: X, Y, Z.

Figure 8-2.-LM-3 communications antenna locations.

TABLE 8-I. - COMMUNICATION MODES

MODE	FUNCTION	FREQUENCY SPECTRUM	SWITCHES AND SWITCH POSITIONS S-BAND T/R (OFF; S-BAND RCV 13A1 15S1 15B1; PCM KEY OFF) 13S4	VHF A T/R (OFF; RCV 15A2 15B2; VOICE VOICE BU OFF) 13S6	VHF B T/R (OFF; RCV 15A9 15B9; BIOMED LEFT RIGHT OFF) 13S3	VOX ICS/XMTR (ICS; PTT 15A6 15B6; MODULATE PM FM) 13S5	RELAY ON (RELAY OFF; RANGE OFF/RESET TV/CWEA ENABLE) 13S1	AUDIO CONT NORM (BU 15A5 15B5; S-BAND XMTR/RCVR PRIM SEC OFF) 13S8	PCM HI (LO 13S13; S-BAND PWR AMPL PRIM SEC OFF) 13S2
PRIMARY INFLIGHT ST-1	VOICE HL BIO MED HBR TM	PCM-TM; HL-BIO VOICE (FM) 1.024 MHZ; 1.25 MHZ	S-BAND T/R PCM	1 VOICE	1 LEFT OR RIGHT	ICS/XMTR PM	2 OFF	NORM PRIM OR SEC	HI PRIM OR SEC
PRIMARY INFLIGHT WITH PRN ST-2	PRN VOICE HL BIO MED HBR TM	PCM-TM; HL-BIO VOICE; PRN 1.024 MHZ; 1.25 MHZ	S-BAND T/R PCM	1 VOICE	1 LEFT OR RIGHT	ICS/XMTR PM	2 RANGE	NORM PRIM OR SEC	HI PRIM OR SEC
LBR TM ST-3	LBR TM	PCM-TM 1.024 MHZ	1 PCM	1 OFF	1 OFF	1 PM	2 OFF	1 PRIM OR SEC	LO PRIM OR SEC
INFLIGHT BACKUP ST-4	BU VOICE LBR TM	BU VOICE; PCM-TM 3; 1.024 MHZ	S-BAND T/R PCM	1 VOICE BU	1 OFF	ICS/XMTR PM	2 OFF	NORM PRIM OR SEC	LO OFF
BU VOICE ST-5	BU VOICE	BU VOICE 3	S-BAND T/R OFF	1 VOICE BU	1 OFF	ICS/XMTR PM	2 OFF	NORM PRIM OR SEC	1 PRIM OR SEC
EMERGENCY KEY ST-6	EMERGENCY KEY	EMERGENCY KEY 512 KHZ	1 KEY	1 OFF	1 OFF	1 PM	2 OFF	1 PRIM OR SEC	1 OFF
EMU 1 ST-7	EMU VOICE VOICE EMU DATA HL BIO MED LBR TM	PCM-TM; HL BIO VOICE EMU 1.024 MHZ; 1.25 MHZ	S-BAND T/R PCM	1 VOICE	1 LEFT OR RIGHT	ICS/XMTR PM	2 OFF	NORM PRIM OR SEC	LO OFF
EMU 2 ST-8	BASEBAND VOICE TO MSFN VOICE FROM MSFN EMU DATA HL BIO MED HBR OR LBR TM	VOICE EMU DATA; PCM-TM 3; 4-12.4 KHZ; 1.024 MHZ	S-BAND T/R PCM	1 VOICE BU	1 LEFT OR RIGHT	ICS/XMTR PM	2 OFF	NORM PRIM OR SEC	LO OFF
FM ST-9	VOICE EMU DATA HL BIO MED HBR OR LBR TM	PCM-TM; HL BIO VOICE; EMU 1.024 MHZ; 1.25 MHZ	S-BAND T/R PCM	1 VOICE	1 LEFT OR RIGHT	ICS/XMTR FM	2 OFF	NORM PRIM OR SEC	HI OR LO PRIM OR SEC
FM/TV ST-10	TV VOICE EMU DATA HL BIO MED HBR OR LBR TM	PCM-TM; HL BIO VOICE; TV; EMU 10 HZ; 500 KHZ; 1.024 MHZ; 1.25 MHZ	S-BAND T/R PCM	1 VOICE	1 LEFT OR RIGHT	ICS/XMTR FM	2 TV CWEA	NORM PRIM OR SEC	HI OR LO PRIM OR SEC

NOTES:

1. INDICATES NO MANDATORY POSITION
2. RELAY MODES ARE SELECTED BY CHOOSING A VHF MODE WITH A SUITABLE S-BAND MODE WITH MODIFICATIONS ONLY ONE RELAY SWITCH MAY BE CHOSEN ON AT A TIME
3. BASEBAND VOICE .3 - 3 KHZ BANDWIDTH

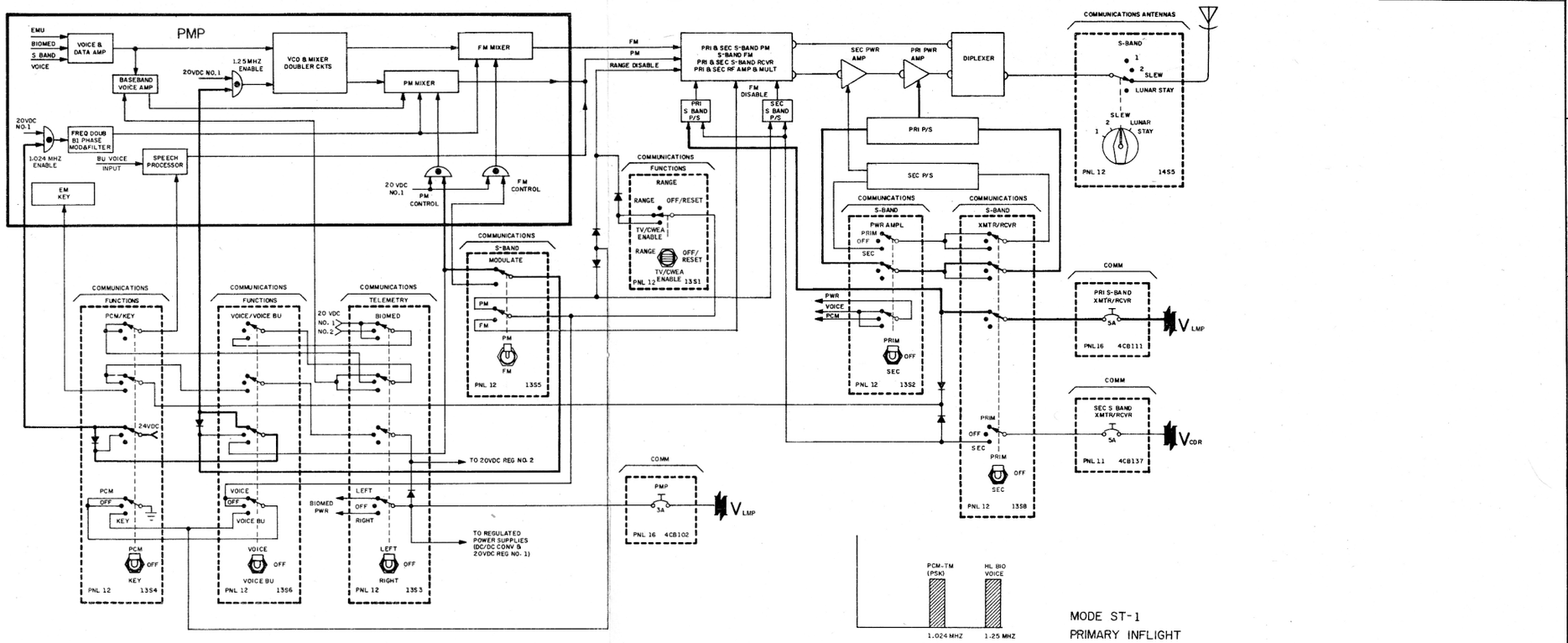

MODE ST-1
PRIMARY INFLIGHT

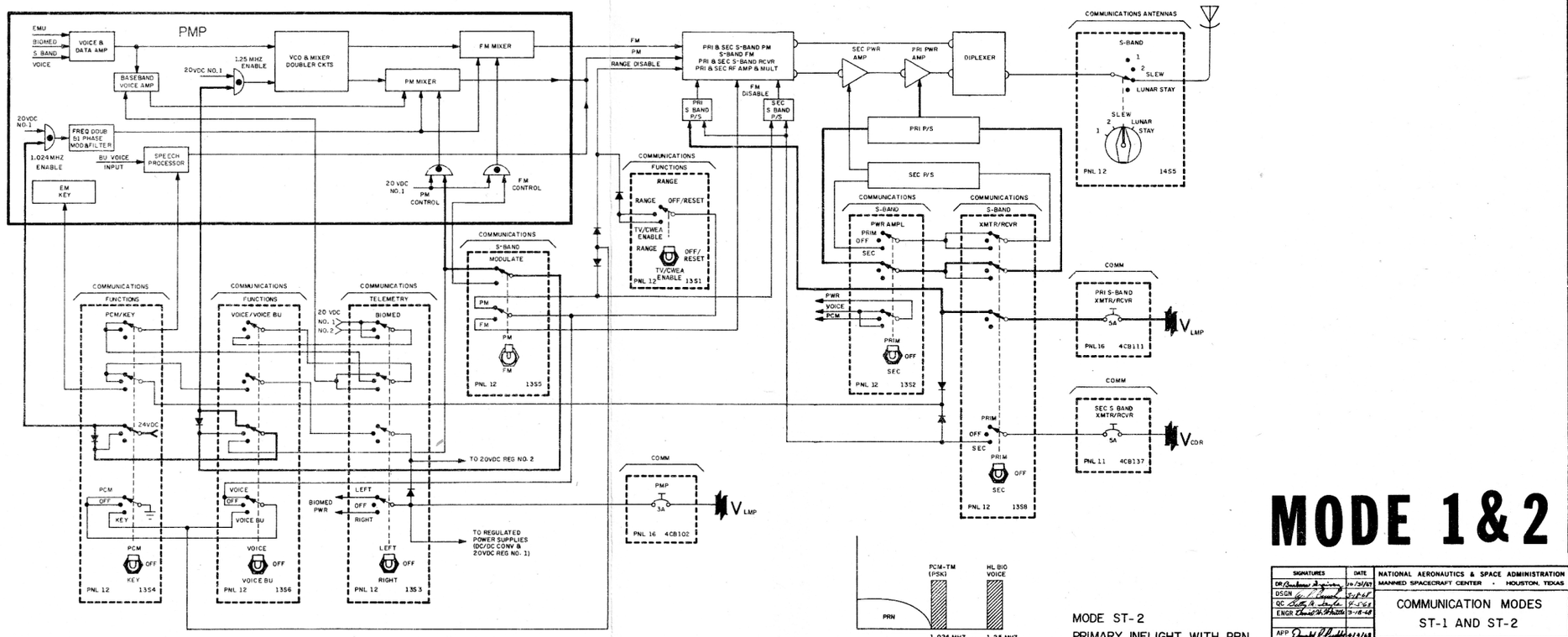

MODE ST-2
PRIMARY INFLIGHT WITH PRN

MODE 1&2

LTR	ENGR	REVISION	DATE	APPROVAL

SIGNATURES	DATE
DR	10/31/67
DSGN	5-18-68
QC	5-18-68
ENGR	5-18-68
APP	5/13/68
FEC	5-15-68
AUTH	5-16-68

NATIONAL AERONAUTICS & SPACE ADMINISTRATION
MANNED SPACECRAFT CENTER · HOUSTON, TEXAS

COMMUNICATION MODES
ST-1 AND ST-2

LM | SIZE J | DWG NO. 8.5

LM 3 | 44 X 38.25 | PAGE 8-9 | SHEET 1 OF 5

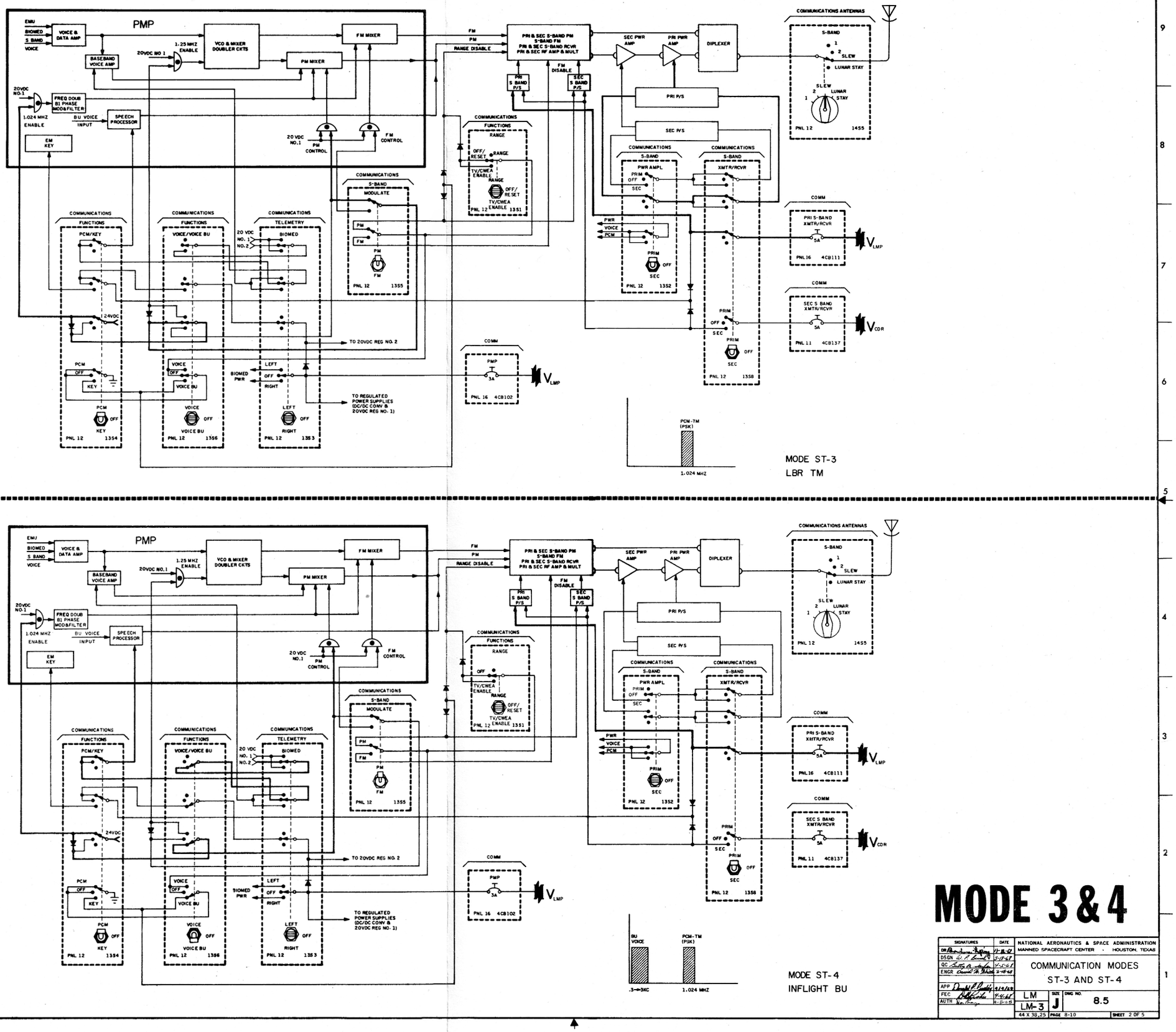
PMP
EMU
BIOMED
S BAND VOICE
VOICE & DATA AMP
BASEBAND VOICE AMP
1.25 MHZ ENABLE
20VDC NO.1
VCO & MIXER DOUBLER CKTS
FM MIXER
PM MIXER
FREQ DOUB BI PHASE MOD&FILTER
1.024 MHZ ENABLE
BU VOICE INPUT
SPEECH PROCESSOR
EM KEY
20 VDC NO.1
PM CONTROL
FM CONTROL
FM
PM
RANGE DISABLE
PRI & SEC S-BAND PM
S-BAND FM
PRI & SEC S-BAND RCVR
PRI & SEC RF AMP & MULT
FM DISABLE
PRI S BAND P/S
SEC S BAND P/S
SEC PWR AMP
PRI PWR AMP
DIPLEXER
COMMUNICATIONS ANTENNAS
S-BAND
SLEW
LUNAR STAY
PNL 12 1455
PRI P/S
SEC P/S
COMMUNICATIONS
FUNCTIONS
RANGE
OFF/ RESET
TV/CWEA ENABLE
PNL 12 1351
S-BAND MODULATE
PM
FM
PNL 12 1355
PWR AMPL
PRIM
OFF
SEC
PWR
VOICE
PCM
PNL 12 1352
S-BAND XMTR/RCVR
COMM
PRI S-BAND XMTR/RCVR
5A
PNL 16 4CB111
V_{LMP}
SEC S BAND XMTR/RCVR
PNL 11 4CB137
V_{CDR}
PNL 12 1358
PCM/KEY
VOICE/VOICE BU
TELEMETRY
BIOMED
20 VDC NO. 1
20 VDC NO. 2
24VDC
TO 20VDC REG NO. 2
PCM
KEY
VOICE
VOICE BU
BIOMED PWR
LEFT
RIGHT
PNL 12 1354
PNL 12 1356
PNL 12 1353
TO REGULATED POWER SUPPLIES (DC/DC CONV & 20VDC REG NO. 1)
COMM
PMP
3A
PNL 16 4CB102
PCM-TM (PSK)
1.024 MHZ
MODE ST-3
LBR TM
BU VOICE
.3-3KC
MODE ST-4
INFLIGHT BU
MODE 3&4
SIGNATURES
DATE
NATIONAL AERONAUTICS & SPACE ADMINISTRATION
MANNED SPACECRAFT CENTER - HOUSTON, TEXAS
COMMUNICATION MODES
ST-3 AND ST-4
LM
LM-3
SIZE J
DWG NO. 8.5
44 X 38.25
PAGE 8-10
SHEET 2 OF 5

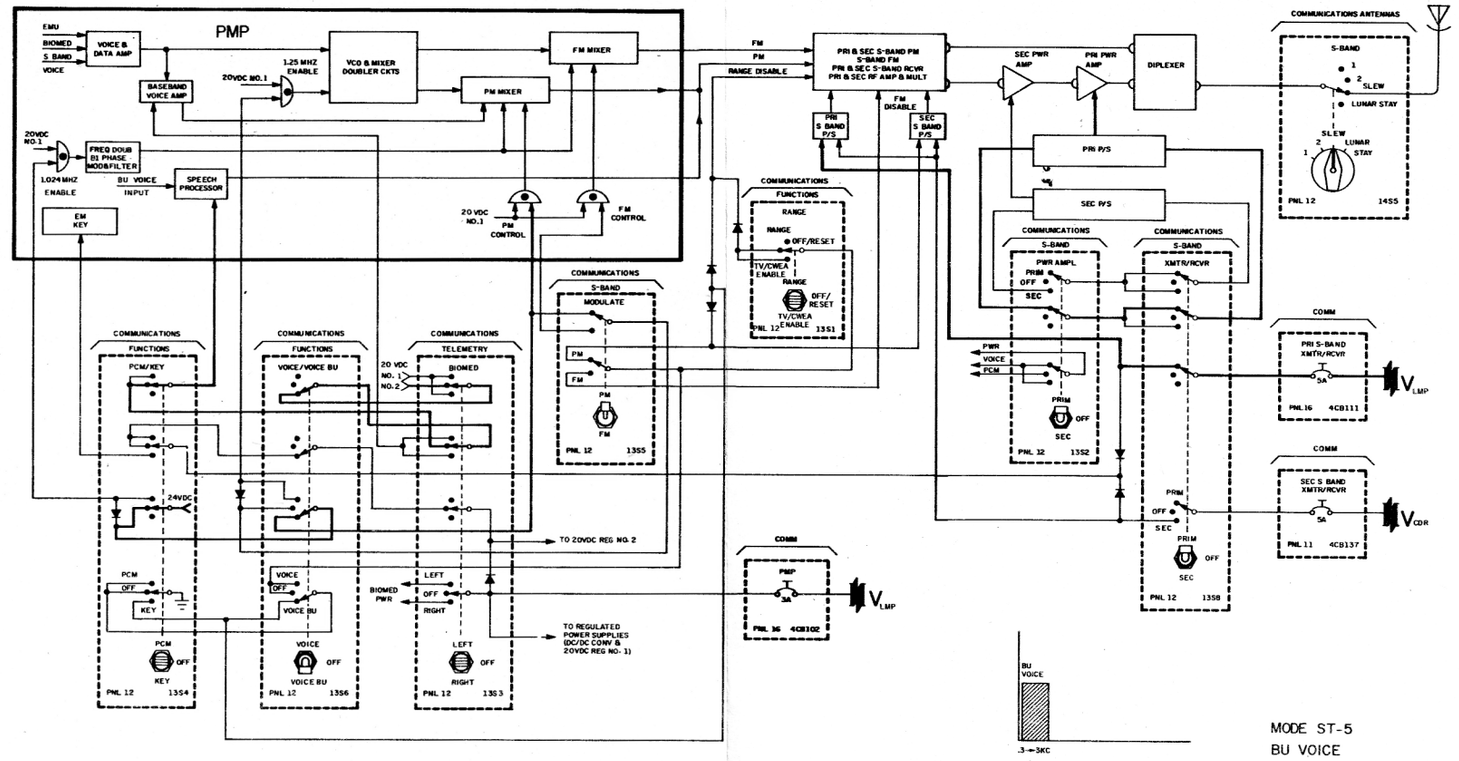

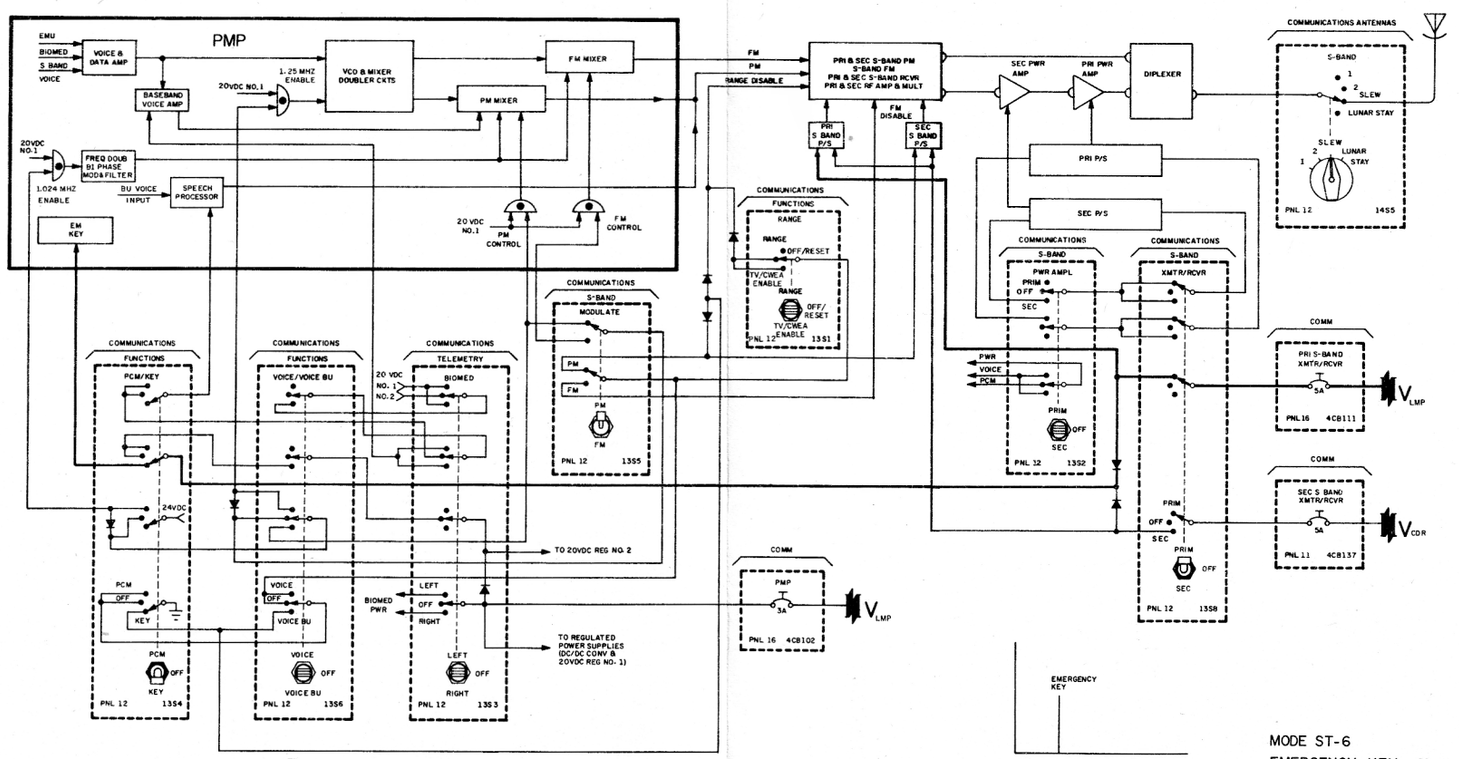

MODE 5&6

LTR	ENGR	REVISION	DATE	APPROVAL

SIGNATURES		DATE
DR	G. Spivey	1-24-67
DSGN	[illegible]	2-17-67
QC	[illegible]	2-24-67
ENGR	[illegible]	3-8-68
APPC	[illegible]	4-1-68
FEC	[illegible]	4-1-68
AUTH	[illegible]	4-8-68

NATIONAL AERONAUTICS & SPACE ADMINISTRATION
MANNED SPACECRAFT CENTER · HOUSTON, TEXAS

COMMUNICATION MODES
ST-5 AND ST-6

LM
LM 3
SIZE J
DWG NO. 8.5
44 X 38.25
PAGE 8-11
SHEET 3 OF 5

MODE 7&8

SIGNATURES	DATE
DR	9/5/68
DSGN	9/5/68
QC	9/5/68
ENGR	9/5/68
APP	9/5/68
FEC	9/5/68
AUTH	9/5/68

NATIONAL AERONAUTICS & SPACE ADMINISTRATION
MANNED SPACECRAFT CENTER - HOUSTON, TEXAS

COMMUNICATION MODES
ST-7 AND ST-8

LM
LM-3
SIZE J
DWG NO. 8.5
44 X 38.25
PAGE 8-12
SHEET 4 OF 5

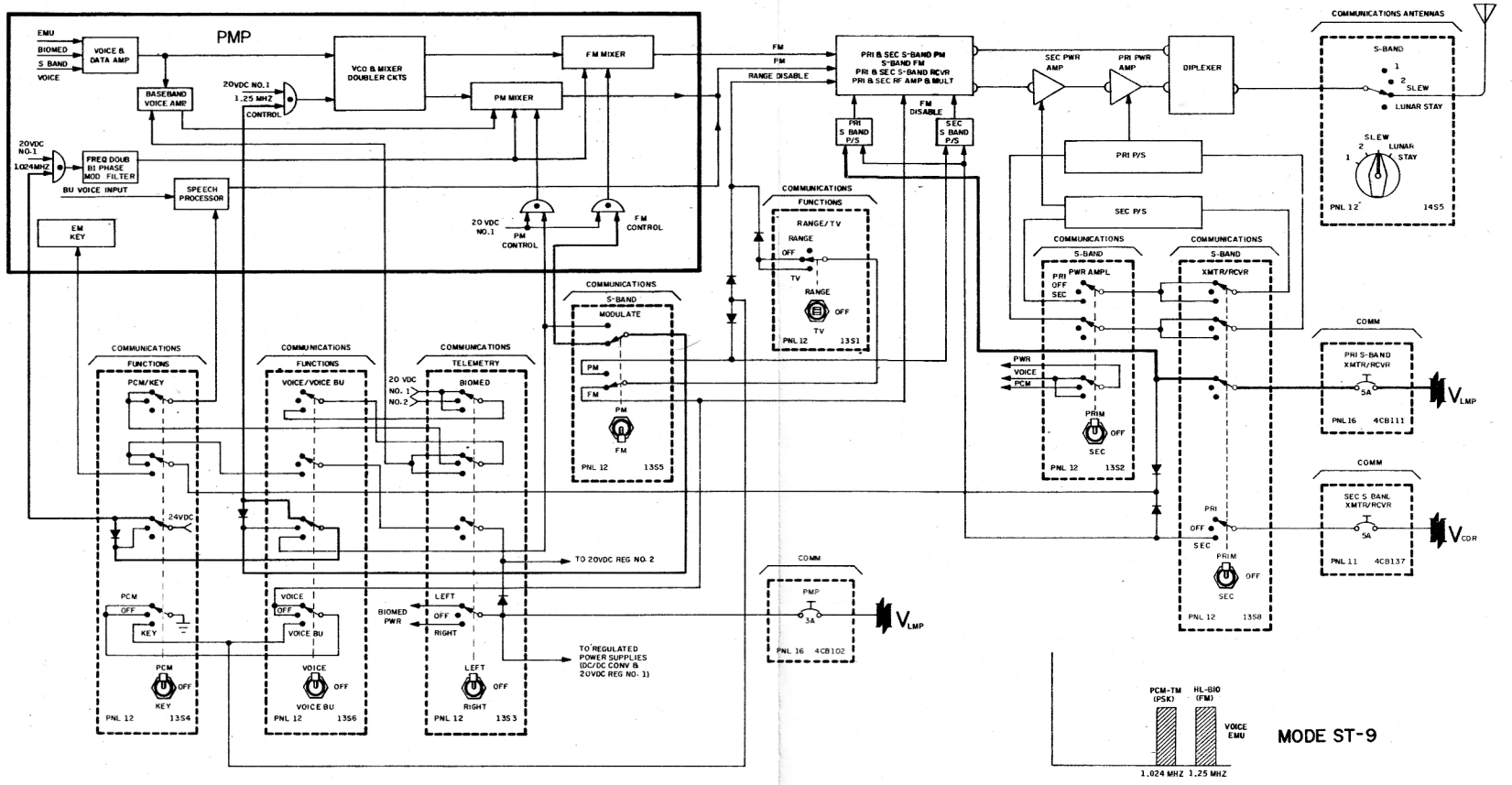

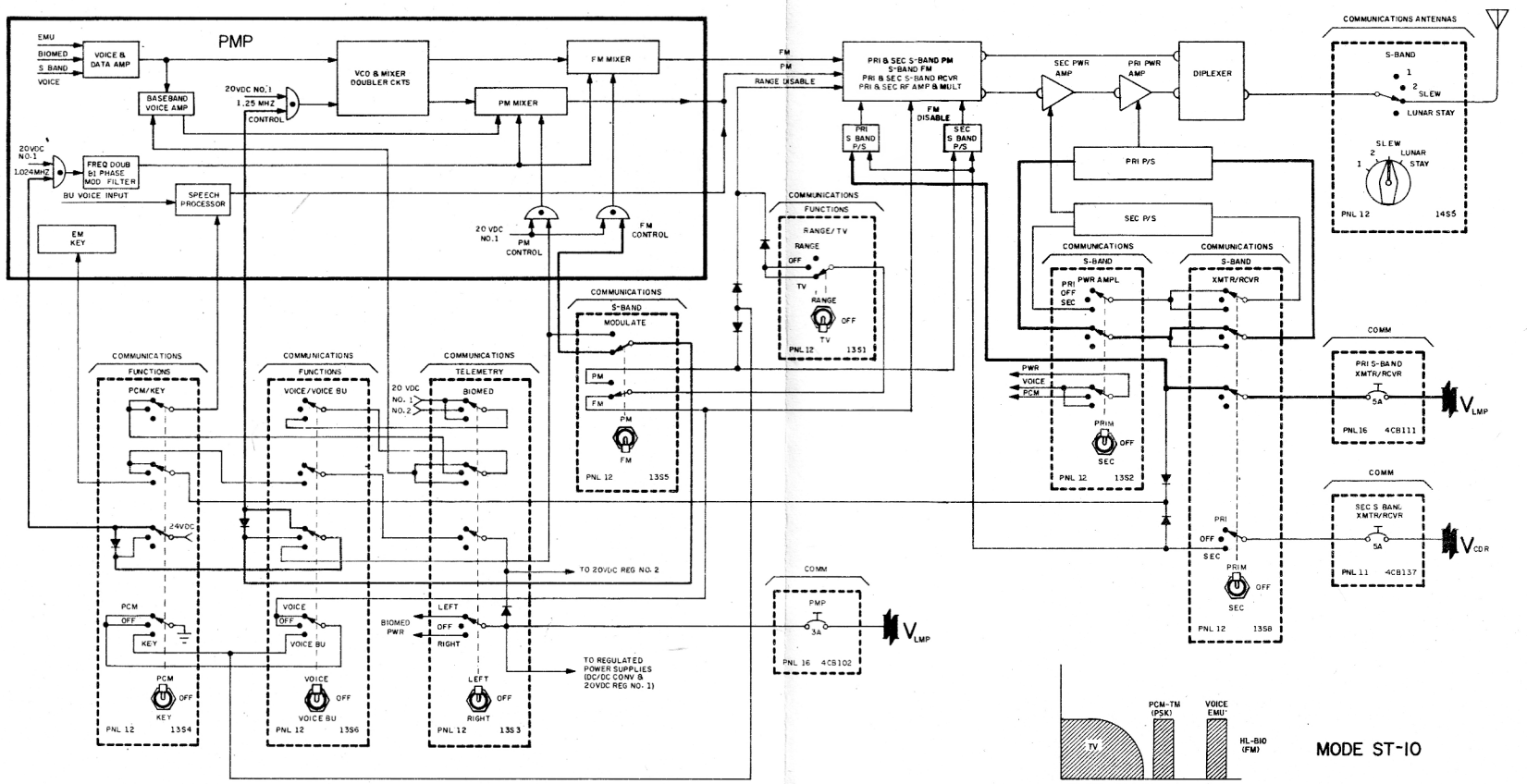

MODE 9&10

SIGNATURES	DATE
DR D.K. Lauk	3/4/68
DSGN G. Parnell	8-2-68
QC Lillian Lauk	8-5-68
ENGR Donald K. Lauk	8/12/68
APP Donald K. Lauk	8/12/68
FEC D. Edwards	8/14/68
AUTH Wm Bray	8-8-68

NATIONAL AERONAUTICS & SPACE ADMINISTRATION
MANNED SPACECRAFT CENTER · HOUSTON, TEXAS

COMMUNICATION MODES
ST-9 AND ST-10

LM
LM-3
SIZE J
DWG NO. 8.5
44 X 38.25
PAGE 8-13
SHEET 5 OF 5

9 INSTRUMENTATION

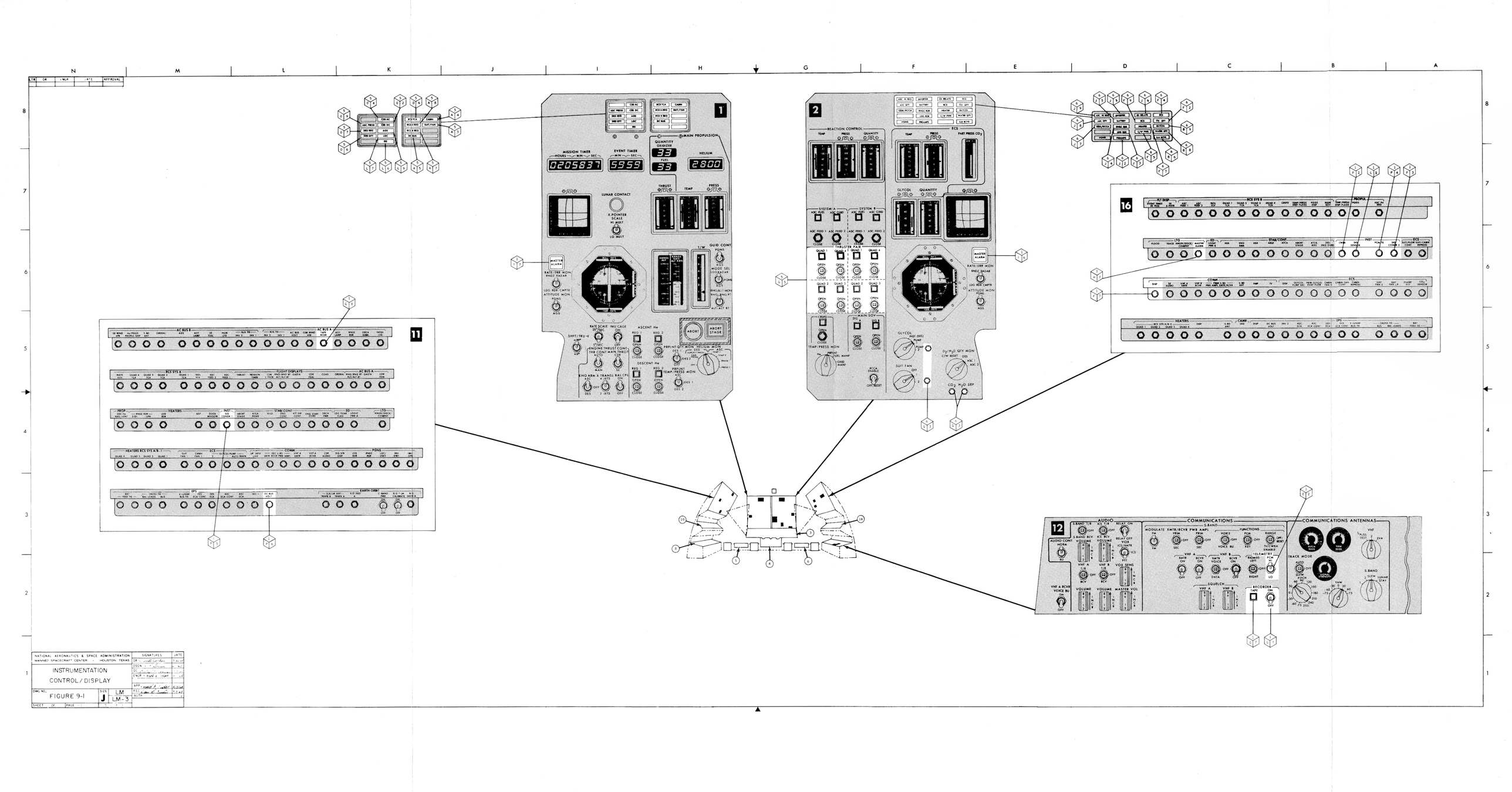

NATIONAL AERONAUTICS & SPACE ADMINISTRATION	SIGNATURES	DATE
MANNED SPACECRAFT CENTER · HOUSTON, TEXAS	DR	
INSTRUMENTATION CONTROL/DISPLAY	DSGN	
	CG	
	ENGR	
	APP	
DWG NO. FIGURE 9-1	SIZE J	LM LM-3
SHEET OF	PAGE	

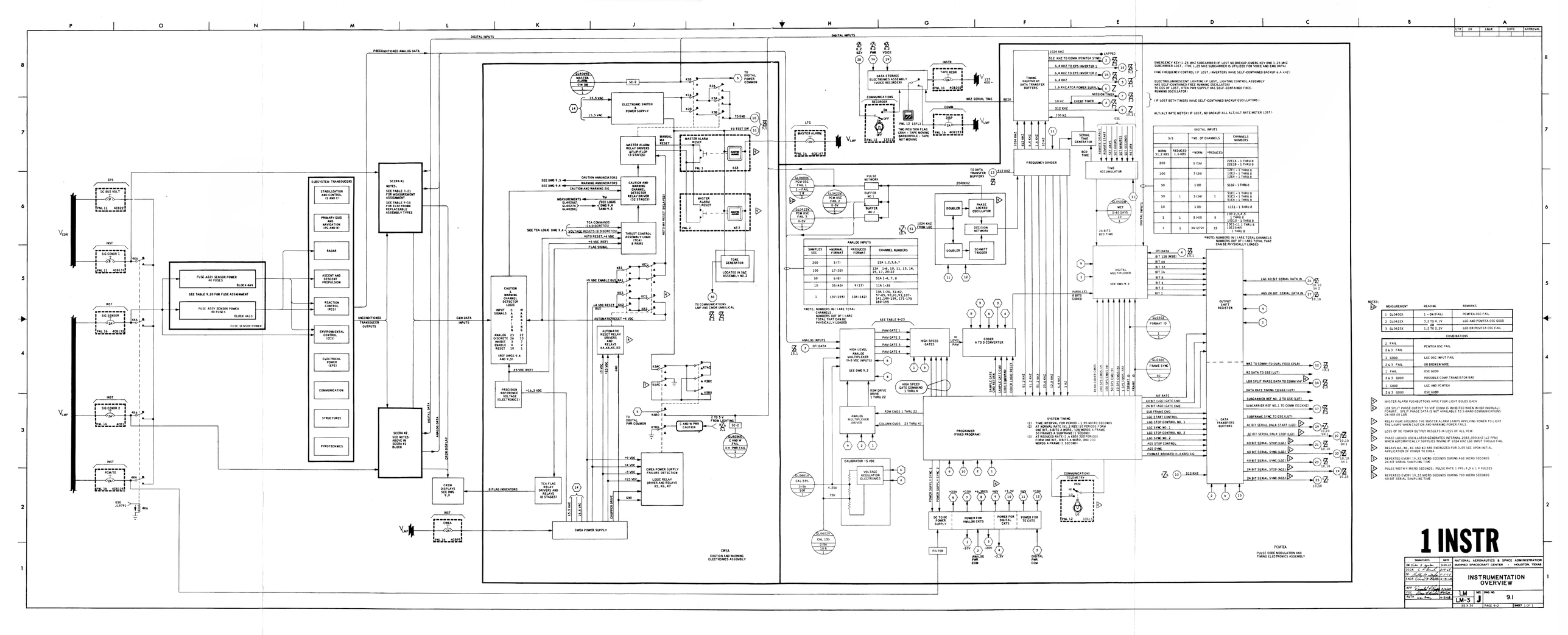
1 INSTR
INSTRUMENTATION OVERVIEW
NATIONAL AERONAUTICS & SPACE ADMINISTRATION
MANNED SPACECRAFT CENTER HOUSTON, TEXAS
LM-3
SIZE J
9.1
PAGE 9-2
SHEET 1 OF 1
DIGITAL INPUTS
PRECONDITIONED ANALOG DATA
UNCONDITIONED TRANSDUCER OUTPUTS
C&W DATA INPUTS
SUBSYSTEM TRANSDUCERS
STABILIZATION AND CONTROL (S AND C)
PRIMARY GUID AND NAVIGATION (PGA AND N)
RADAR
ASCENT AND DESCENT PROPULSION
REACTION CONTROL (RCS)
ENVIRONMENTAL CONTROL (ECS)
ELECTRICAL POWER (EPS)
COMMUNICATION
STRUCTURES
PYROTECHNICS
SCERA #1
SCERA #2
CAUTION WARNING CHANNEL DETECTOR LOGIC
CAUTION AND WARNING CHANNEL BUFFER AND REGISTER (120 STAGES)
MASTER ALARM RELAY DRIVERS &FLIP-FLOP (3 STAGES)
MASTER ALARM RESET
THRUST CONTROL ASSEMBLY LOGIC (TCA) (8 PAIRS)
TONE GENERATOR
LOCATED IN SAC ASSEMBLY NO.2
CWEA POWER SUPPLY
CWEA POWER SUPPLY FAILURE DETECTION
LOGIC RELAY DRIVER AND RELAYS K5, K6, K7
CWEA
CAUTION AND WARNING ELECTRONICS ASSEMBLY
ELECTRONIC SWITCH POWER SUPPLY
AUTOMATIC RESET RELAY DRIVERS AND RELAYS KA,KB,KC,KD
PRECISION REFERENCE POWER SUPPLY (ELECTRONICS)
CREW DISPLAYS SEE DWG 9.0
8 FLAG INDICATORS
TCA FLAG RELAY DRIVERS AND RELAYS (8 STAGES)
DIGITAL DATA
ANALOG DATA
CREW DISPLAY
DATA STORAGE ELECTRONICS ASSEMBLY (VOICE RECORDER)
COMMUNICATIONS RECORDER
INSTR TAPE RCDR
COMM DISP
TWO POSITION FLAG TYPE SWITCH MOVING BAREFOOT - TAPE NOT MOVING
NRZ SERIAL TIME (BCD)
TIMING EQUIPMENT DATA TRANSFER BUFFERS
1024 KHZ
512 KHZ TO COMM (PCM/TEA SYNC)
6.4 KHZ TO EPS INVERTER 1
6.4 KHZ TO EPS INVERTER 2
6.4 KHZ
1.6 KHZ ATCA POWER SUPPLY
10 HZ
512 KHZ
100 KHZ
EVENT TIMER
MISSION TIMER
GSE
FREQUENCY DIVIDER
SERIAL TIME GENERATOR
BCD TIME
TIME ACCUMULATOR
2048KHZ
PULSE NETWORK
BUFFER NO.1
BUFFER NO.2
DOUBLER
PHASE LOCKED OSCILLATOR
DECISION NETWORK
SCHMITT TRIGGER
1024 KHZ FROM LGC
TO DATA TRANSFER BUFFERS
512 KHZ
SLO5000 PCM OSC FAIL 1
SLO5022Y PCM OSC FAIL 2
SLO5022Z PCM OSC FAIL 3
SLO5023Y PCM OSC FAIL 4
SLO5023Z PCM OSC FAIL 5
SLO5024 WET
SLO5025 DRY
0-60 DAYS
26 BITS BCD TIME
DIGITAL MULTIPLEXER
SEE DWG 9.2
PARALLEL 8 BITS CODED
DIGITAL INPUTS
DSKY
DSP
LTG
MASTER ALARM
ANALOG INPUTS
SAMPLES SEC
*NORMAL FORMAT
*REDUCED FORMAT
CHANNEL NUMBERS
*NOTE: NUMBERS IN ( ) ARE TOTAL CHANNELS NUMBERS OUT OF ( ) ARE TOTAL THAT CAN BE PHYSICALLY LOADED
DIGITAL INPUTS
S/S
*NO. OF CHANNELS
CHANNELS NUMBERS
NORM 51.2 KBS
REDUCED 1.6 KBS
*NORM
*REDUCED
*NOTE: NUMBERS IN ( ) ARE TOTAL CHANNELS NUMBERS OUT OF ( ) ARE TOTAL THAT CAN BE PHYSICALLY LOADED
EMERGENCY KEY-1.25 MHZ SUBCARRIER (IF LOST NO BACKUP-EMERG KEY AND 1.25 MHZ SUBCARRIER LOST, ITHE 1.25 MHZ SUBCARRIER IS UTILIZED FOR VOICE AND EMU DATA)
FINE FREQUENCY CONTROL (IF LOST, INVERTERS HAVE SELF-CONTAINED BACKUP 6.4 KHZ)
ELECTROLUMINESCENT LIGHTING (IF LOST, LIGHTING CONTROL ASSEMBLY HAS SELF-CONTAINED FREE RUNNING OSCILLATOR)
TO CES (IF LOST, ATCA PWR SUPPLY HAS SELF-CONTAINED FREE-RUNNING OSCILLATOR)
(IF LOST BOTH TIMERS HAVE SELF-CONTAINED BACKUP OSCILLATORS)
ALT/ALT RATE METER (IF LOST, NO BACKUP-ALL ALT/ALT RATE METER LOST)
ANALOG MUX
HIGH LEVEL ANALOG MULTIPLEXER (0-5 VDC INPUTS)
SEE DWG 9.3
HIGH SPEED GATES
HI LEVEL PAM
CODER A TO D CONVERTER
PAM GATE 1
PAM GATE 2
PAM GATE 3
PAM GATE 4
ROW DRIVE (512 HX) 1 THRU 22
ROW CMOS 1 THRU 22
COLUMN CMOS 23 THRU 47
ANALOG MULTIPLEXER DRIVER
CALIBRATOR +5 VDC
VOLTAGE REGULATION ELECTRONICS
SEE TABLE 9-23
SYSTEM TIMING
(1) TIME INTERVAL FOR PERIOD = 1.95 MICRO SECONDS
(2) AT NORMAL RATE (51.2 KBS) 12 PERIODS FORM ONE BIT, 8 BITS A WORD, 128 WORDS A FRAME 50 FRAMES A SUBFRAME (1 SECOND)
(3) AT REDUCED RATE (1.6 KBS) 320 PERIODS FORM ONE BIT, 8 BITS A WORD, AND 200 WORDS A FRAME (1 SECOND)
PROGRAMER (FIXED PROGRAM)
POWER SUPPLY
DC TO DC POWER SUPPLY
POWER FOR ANALOG CKTS
POWER FOR DIGITAL CKTS
POWER FOR TE CKTS
FILTER
ANALOG PWR COM
DIGITAL PWR COM
COMMUNICATIONS
PCM
HI
LO
PCMTEA
PULSE CODE MODULATION AND TIMING ELECTRONICS ASSEMBLY
OUTPUT SHIFT REGISTER
DATA TRANSFERS BUFFERS
DFI DATA
BIT 128 (MSB)
BIT 64
BIT 32
BIT 16
BIT 8
BIT 4
BIT 2
BIT 1
LGC 40 BIT SERIAL DATA IN
AGS 24 BIT SERIAL DATA IN
WRZ TO COMM (TO DUAL FEED CPLR)
RZ DATA TO GSE (LGT)
LBR SPLIT PHASE DATA TO COMM VHF
DATA RATE TIMING TO GSE (LGT)
SUBCARRIER REF NO. 2 TO GSE (LGT)
SUBCARRIER REF NO. 1 TO COMM (512 KHZ)
SUBFRAME SYNC TO GSE (LGT)
40 BIT SERIAL DNLK START (LGC)
40 BIT SERIAL DNLK STOP (LGC)
40 BIT SERIAL STOP (LGC)
40 BIT SERIAL SYNC (LGC)
24 BIT SERIAL STOP (AGS)
24 BIT SERIAL SYNC (AGS)
BIT RATE
40 BIT (LGC) GATE CMD
24 BIT (AGC) GATE CMD
SUB FRAME CMD
LGC START CONTROL
LGC STOP CONTROL NO. 1
LGC SYNC NO. 1
LGC STOP CONTROL NO. 2
LGC SYNC NO. 2
AGS SYNC CONTROL
AGS SYNC
FORMAT REDUCED (1.6 KBS) SIG
512 KHZ
FORMAT 10
FRAME SYNC
NOTES:
1. MEASUREMENT / READING / REMARKS
2. COMBINATIONS
3. MASTER ALARM PUSHBUTTONS HAVE FOUR LIGHT BULBS EACH
4. LBR SPLIT PHASE OUTPUT TO VHF COMM IS INHIBITED WHEN IN HBR (NORMAL) FORMAT. SPLIT PHASE DATA IS NOT AVAILABLE TO S-BAND COMMUNICATIONS ON HBR OR LBR
5. RELAY K6AC GROUNDS THE MASTER ALARM LAMPS APPLYING POWER TO LIGHT THE LAMPS WHEN CAUTION AND WARNING POWER FAILS
6. LOSS OF DC POWER OUTPUT RESULTS IN LOSS OF ALL PCM
7. PHASE LOCKED OSCILLATOR GENERATES INTERNAL 2048,000 KHZ (±2 PPM) WHEN AUTOMATICALLY SUPPLIES TIMING IF 1024 KHZ LGC INPUT SHOULD FAIL
8. RELAYS K6, K6, KC AND KD ARE ENERGIZED FOR 0.55 SEC UPON INITIAL APPLICATION OF POWER TO CWEA
9. REPEATED EVERY 19.53 MICRO SECONDS DURING 468 MICRO SECONDS 24 BIT SERIAL SAMPLING TIME
10. PULSE WIDTH 4 MICRO SECONDS, PULSE RATE 1 PPS; 4.5 ± 1 V PULSES
11. REPEATED EVERY 19.53 MICRO SECONDS DURING 780 MICRO SECONDS 40 BIT SERIAL SAMPLING TIME
1 FAIL
2 & 3 FAIL
1 GOOD
2 & 3 FAIL
1 FAIL
2 & 3 GOOD
1 GOOD
2 & 3 GOOD
PCMTEA OSC FAIL
LGC AND PCMTEA OSC GOOD
LGC OR PCMTEA OSC FAIL
LGC OSC INPUT FAIL
OR BROKEN WIRE
OSC GOOD
POSSIBLE COMP TRANSISTOR BAD
LGC AND PCMTEA OSC GOOD
SIGNATURES
DATE
NAME
DES
CHK
APP
PROJ
AUTH

LBR (REDUCED 1.4 KBS) FORMAT

START					FORMAT					
	SYNC 5101x	SYNC 5101x	SYNC 5101x	SYNC 5101x	1061	1045	1046	1047	1048	1049
	1	2	3	4	5	6	7	8	9	10
	1041P	1061	1041Z	1042	1043	1045	1046	1047	1048	1049
	11	12	13	14	15	16	17	18	19	20
	1042	1042P	1042Y	1042Z	1043	1044	1045	1046	1047	1048
	21	22	23	24	25	26	27	28	29	30
	1049	1045P	1101x	1101x	1101x	1101x	1043S	1043S	1043T	1043R
	31	32	33	34	35	36	37	38	39	40
	1043	1044P	1041	1041P	1041Z	1042	1149	1141A	1141S	1044S
	41	42	43	44	45	46	47	48	49	50
	1142A	1142K	1042N	1045N	1143N	1143K	1045K	1143R	1143S	1144S
	51	52	53	54	55	56	57	58	59	60
	1045	1045R	1045N	1046O	1046S	1046Z	1046S	1046R	1046S	1046S
	61	62	63	64	65	66	67	68	69	70
	1046T	1046R	1104	1107	1108	1109	1047A	1047S	1047R	1047S
	71	72	73	74	75	76	77	78	79	80
	1081O	1081	1082	1083	1084P	1084S	1082	1083	1084	1085
	81	82	83	84	85	86	87	88	89	90
	1048S	1048T	1048R	1048S	1049O	1049S	1049Z	1049S	1049R	1049S
	91	92	93	94	95	96	97	98	99	100
	1084	1049T	1049R	1049S	1041O0	1041O1	1041O2	1041O3	1041O4	1041O5
	101	102	103	104	105	106	107	108	109	110
	1041O6	1041O7	1041O8	1041O9	1041P0	1041P1	1041P2	1041P3	1041P4	1041P5
	111	112	113	114	115	116	117	118	119	120
	1041P6	1041P7	1041P8	1041P9	1041Q0	1041Q1	1041Q2	1041Q3	1041Q4	1041Q5
	121	122	123	124	125	126	127	128	129	130
	1041Q6	1041Q7	1041Q8	1041Q9	1041R0	1041R1	1041R2	1041R3	1041R4	1041R5
	131	132	133	134	135	136	137	138	139	140
	1041R6	1041R7	1041R8	1041R9	1041S0	1041S1	1041S2	1041S3	1041S4	1041S5
	141	142	143	144	145	146	147	148	149	150
	1044S	1044T	1044R	1044S	1045O	1045S	1045Z	1045S	1045R	1045S
	151	152	153	154	155	156	157	158	159	160
	1045T	1045R	1046O	1046S	1046Z	1046S	1046R	1046S	1046T	1047S
	161	162	163	164	165	166	167	168	169	170
	1047R	1047S	1047T	1048S	1048Z	1048S	1048R	1048S	1048T	1049S
	171	172	173	174	175	176	177	178	179	180
	1049R	1049S	1049T	1041O0	1041O1	1041O2	1041O3	1041O4	1041O5	1041O6
	181	182	183	184	185	186	187	188	189	190
	1041O7	1041O8	1041O9	1041P0	1041P1	1041P2	1041P3	1041P4	1041P5	1041P6
	191	192	193	194	195	196	197	198	199	200

NOTE: ALL LBR CHANNELS ARE SAMPLED AT 200 SAMPLES PER SECOND/5.5/KS CHANNEL DESIGNATOR FOR WORDS 1, 2, 3, 4, 5, 33, 34, 35, 36, 43, 44, 45, 47, 48, 50, 51, 52, 54, 55, 56, 59, 60 ARE TO BE INTERPRETED AS 200 SAMPLES PER SEC. REDUCED FORMAT IS NOT AVAILABLE ON UNMANNED LM

HSR (51.2 KB) FORMAT

START	SYNC 5101x	SYNC 5101x	SYNC 5101x	SYNC A FLOOD MARKER 0 or 3101x		SEE BELOW		22E1x	A	22E1x	A	12E1	A
	1	2	3	4		5		6		7		8	
	22A1	A	22A2	A	22A3	A	22A4	A	22A5	A	22A6	A	22A7	A	12E2	A
	9		10		11		12		13		14		15		16	
	12A1	A	12A2	A	12A3	A	12A4	A	12A5	A	12A6	A	12A7	A	55E1	A
	17		18		19		20		21		22		23		24	
	13A8	A	12A9	A	12A10	A	12A11	A	12A12	A	12A13	A	12A14	A	51E2	A
	25		26		27		28		29		30		31		32	
	3101x 14 A 0 33	B C 14 9 35	3101x 14 A 0 34	B C 14 9 36	3101x 14 A 0 35	B C 15 10 37	3101x 14 A 0 36	B C 15 10 39	SEE BELOW		22E1x	A	22E1x	A	12E3	A
	33	37	34	38	35	39	36	40	37		38		39		40	
	22 1	A	22A2	A	22A3	A	22A4	A	22A5	A	22A6	A	22A7	A	12E4	A
	41		42		43		44		45		46		47		48	
	12A15	A	12A16	A	12A17	A	12A18	A	12A19	A	12A20	A	12A21	A	12A22	A
	49		50		51		52		53		54		55		56	
	51A1	A	51A2	A	51A3	A	51A4	A	51A5	A	51A6	A	51A7	A	51A8	A
	57		58		59		60		61		62		63		64	
	11A 1 12 65	B C 13 0 33	11A 2 13 66	B C 13 9 34	11A 3 13 67	B C 14 9 35	11A 4 14 68	B C 15 0 36	SEE BELOW		22E1x	A	22E1x	A	12E1	A
	65	69	66	70	67	71	68	72	69		70		71		72	
	22A1	A	22A2	A	22A3	A	22A4	A	22A5	A	22A6	A	22A7	A	12E2	A
	73		74		75		76		77		78		79		80	
	12A1	A	12A2	A	12A3	A	12A4	A	12A5	A	12A6	A	12A7	A	51E3	A
	81		82		83		84		85		86		87		88	
	12A8	A	12A9	A	12A10	A	12A11	A	12A12	A	12A13	A	12A14	A	51E4	A
	89		90		91		92		93		94		95		96	
	3102	A	SEE BELOW		11A 0 12 97	B 9 35	SEE BELOW		SEE BELOW		22E1x	A	22E1x	A	12E3	A
	97		98		99	43	100		101		102		103		104	
	22A1	A	22A2	A	22A3	A	22A4	A	22A5	A	22A6	A	22A7	A	12E4	A
	105		106		107		108		109		110		111		112	
	12A15	A	12A16	A	12A17	A	12A18	A	12A19	A	12A20	A	12A21	A	12A22	A
	113		114		115		116		117		118		119		120	
	51A1	A	51A1	A	51A1	A	51A1	A	51A1	A	51A2	A	51A2	A	51A2	A
	121		122		123		124		125		126		127		128	

PF PRIME FRAMES

1. ALL PRIME FRAMES 1-90
2. PRIME FRAMES 1, 6, 11 ------ 46
3. 2, 7, 12 ------ 47
4. 3, 8, 13 ------ 48
5. 4, 9, 14 ------ 49
6. 5, 10, 15 ------ 50

WORD ABBREVIATIONS
"A"- ANALOG
"B"- DIGITAL PARALLEL
"C"- DIGITAL PARALLEL EVENT
"DS"- DIGITAL SERIAL

10 1.5/S
11 10 K/S
12 45 K/S
51 90 S/S
22 200 S/S

EXAMPLE: A
22 ANALOG CHANNEL 4
200 S/S

CHANNEL ASSIGNMENT FOR HSR (51.2) PRIME FRAMES (N WORD 5, 37, 69, 90, 101 AND 131)

FRAME	WD 5	WD 37	WD 69	WD 90	WD 101	WD 131
1	1061	1041	1042	1145	1147	1063
2	1044	1045	1046	1061	1141Z	1067
3	1046	1045	1041O	1082	1142Y	1041L
4	1041Z	1041J	1041K	1083	1092	1041S
5	1041K	1041Z	1041O	1084	1101	1041N
6	1085	1042O	1042L	1145	1147	1042O
7	1042S	1042K	1042S	1085	1141Y	1042K
8	1042Z	1042R	1042P	1086	1101	1042R
9	1043S	1043K	1043T	1087	1141Z	1043S
10	1043S	1043K	1043T	1OE0	1151	1043R
11	1085	1043P	1044O	1OE1	1106	1043S
12	1044Z	1044J	1044K	1OE2	1141Y	1044S
13	1044K	1044T	1044S	1OE10	1142Y	1044Y
14	1045O	1045J	1045K	1OE11	1142Z	1044J
15	1045K	1045S	1045K	1OE12	1151	1045T
16	1057	1045R	1045K	1145	1147	1046Z
17	1046J	1046Z	1046J	1OE15	1141Z	1046K
18	1046S	1046K	1046T	1OE14	1142Y	1046K
19	1046Y	1047O	1047L	1OE15	1OO6	1047Z
20	1047S	1047K	1047S	1OE16	1151	1047K
21	1099	1047T	1047R	1145	1147	1047Y
22	1048O	1048J	1048Z	1OE17	1141Y	1048S
23	1048K	1048S	1048K	1OE18	1142Y	1048T
24	1048S	1048Y	1049O	1OE19	1OO10	1049J
25	1049Z	1049S	1049K	1OE20	1151	1049S
26	1049K	1049T	1049R	1145	1147	1049Y
27	1041O5	1041O5	1041O2	1OE21	1141Y	1041O3
28	1041O4	1041O5	1041O6	1OE22	1142Y	1041O7
29	1041O8	1041O9	1041P0	1OE23	1OE24	1041P1
30	1041P2	1041P3	1041P4	1OE25	1151	1041P5
31	1041P6	1041P7	1041P8	1145	1147	1041P9
32	1041Q0	1041Q1	1041Q2	1OE26	1141Y	1041Q3
33	1041Q4	1041Q5	1041Q6	1OE27	1142Y	1041Q7
34	1041Q8	1041Q9	1041R0	1OE28	1OE29	1041R1
35	1041R2	1041R3	1041R4	1OE30	1151	1041R5
36	1041R6	1041R7	1041R8	1145	1147	1041R9
37	1041S0	1041A1	1041A2	1OE31	1141Y	1041A3
38	1041A4	1041A5	1041A6	1OE32	1142Y	1041A7
39	1041A8	1041A9	1041A0	1OE33	1OE36*	1041S1
40	1041S2	1041S3	1041S4	1OE35	1151	1041S5
41	1041S6	1041S7	1041S8	1145	1147	1041S9
42	1041S0	1041S1	1041S2	1OE36	1141Y	1041S3
43	1041S4	1041S5	1041S6	1OE37	1142Y	1041S7
44	1041S8	1041S9	1041T0	1OE38	1OE39	1041T1
45	1041T2	1041T3	1041T4	1OE40	1151	1041T5
46	1041T6	1041T7	1041T8	1145	1147	1041T9
47	1041O7	1041B1	1041B2	1OE41	1141Y	1041B3
48	1041B4	1041B5	1041B6	1OE42	1142Y	1041B7
49	1041B8	1041B9	1041B0	1OE43	1OE44	1041C1
50	1041B2	1041B3	1041B4	1OE45	1151	1041B5

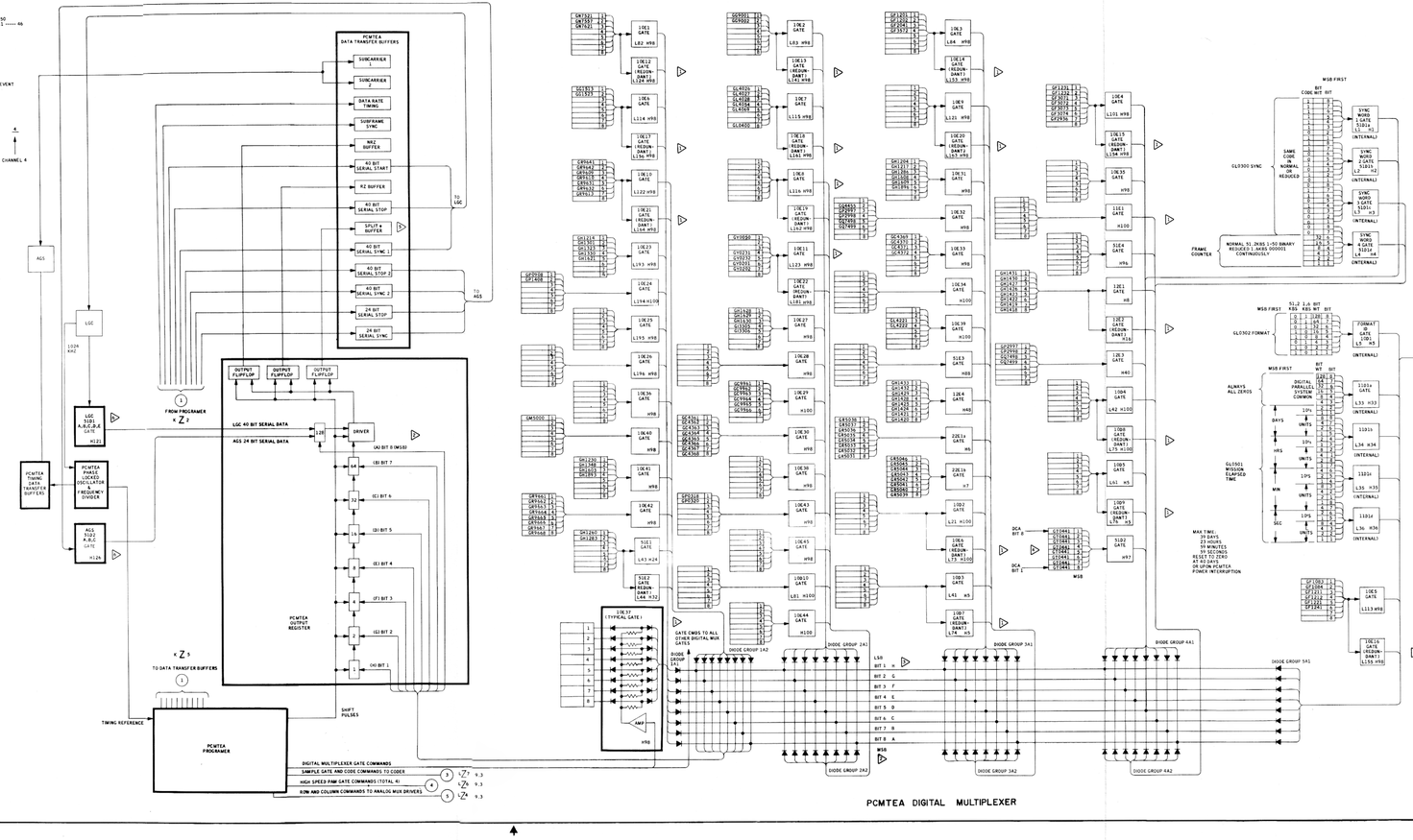

2 DIGITAL

PCMTEA DIGITAL MULTIPLEXER

SIGNATURES	DATE
Dr. Clifton Taylor	
COOR. Robert Piland	7/20
ENGR. Robert Piland	7/20
ENGR. Wm. Hathaway	7/20
REPR. Robert Piland	7/20
TEC. Jim Hall	7/20
AUTH. Ed. Grau	7-20-6

NATIONAL AERONAUTICS & SPACE ADMINISTRATION
MANNED SPACECRAFT CENTER — HOUSTON, TEXAS

INSTRUMENTATTATION DIGITAL MUX

LM LM-3 J | SUB (DWG NO) 9-2 | 93.5 X 54 | PAGE 9-3 | SHEET 1 OF 1

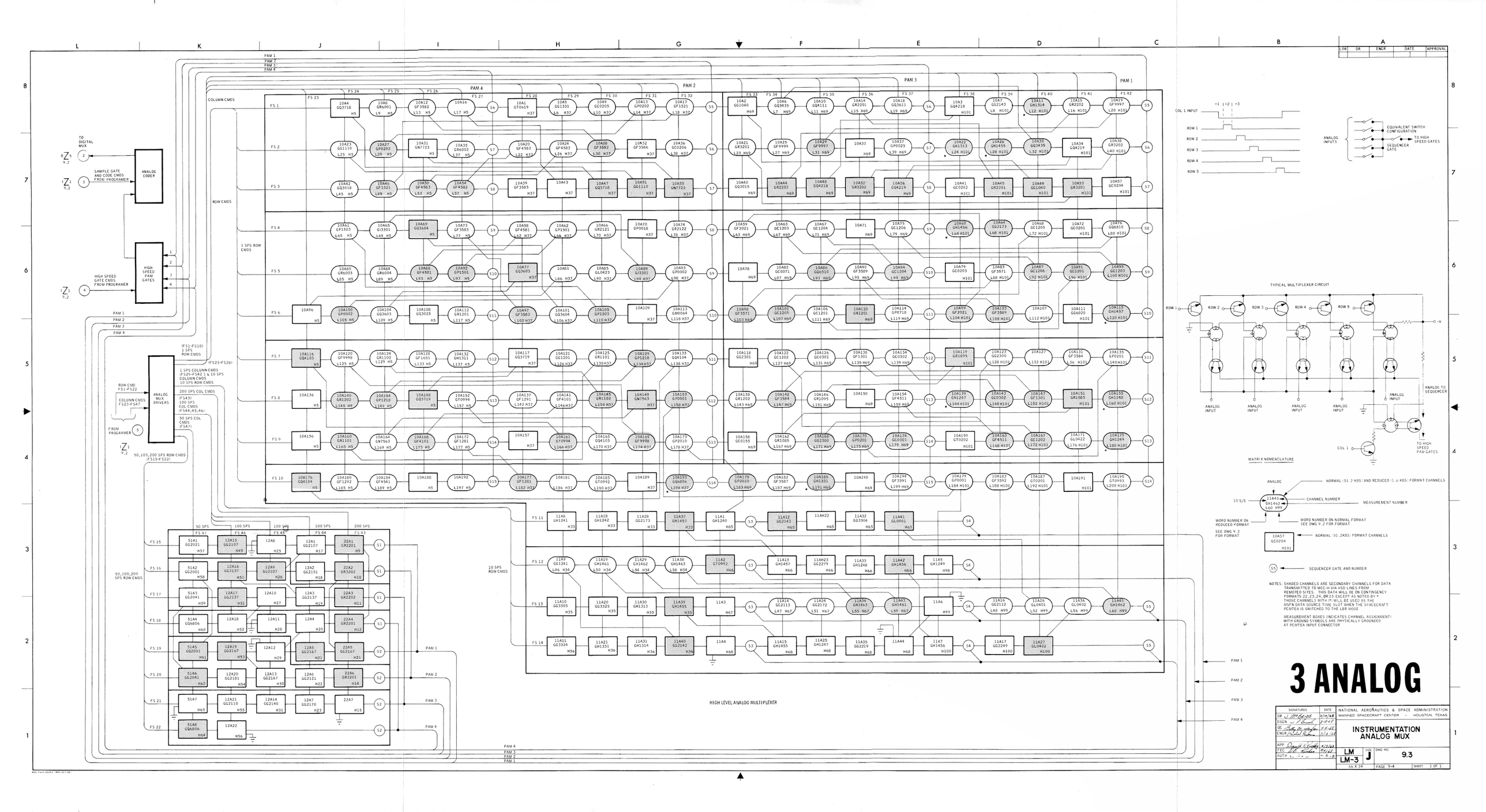
3 ANALOG
INSTRUMENTATION ANALOG MUX
NATIONAL AERONAUTICS & SPACE ADMINISTRATION
MANNED SPACECRAFT CENTER · HOUSTON, TEXAS
LM-3
DWG NO 9.3
SIZE J
PAGE 9-4
SHEET 1 OF 1
TYPICAL MULTIPLEXER CIRCUIT
MATRIX NOMENCLATURE
ANALOG
NORMAL (51.2 KBS) AND REDUCED (1.6 KBS) FORMAT CHANNELS
CHANNEL NUMBER
MEASUREMENT NUMBER
WORD NUMBER ON REDUCED FORMAT
WORD NUMBER ON NORMAL FORMAT SEE DWG 9.2 FOR FORMAT
NORMAL (51.2KBS) FORMAT CHANNELS
SEQUENCER GATE AND NUMBER
NOTES: SHADED CHANNELS ARE SECONDARY CHANNELS FOR DATA TRANSMITTED TO MCC-H VIA HSD LINES FROM REMOTED SITES. THIS DATA WILL BE ON CONTINGENCY FORMATS 22,23,24, OR 25 EXCEPT AS NOTED BY * THOSE CHANNELS WITH (*) WILL BE USED AS THE MSFN DATA SOURCE TIME SLOT WHEN THE SPACECRAFT PCMTEA IS SWITCHED TO THE LBR MODE
MEASUREMENT BOXES (INDICATES CHANNEL ASSIGNMENT) WITH GROUND SYMBOLS ARE PHYSICALLY GROUNDED AT PCMTEA INPUT CONNECTOR
HIGH LEVEL ANALOG MULTIPLEXER
COLUMN CMDS
ROW CMDS
ANALOG CODER
HIGH SPEED PAM GATES
ANALOG MUX DRIVERS
SAMPLE GATE AND CODE CMDS FROM PROGRAMER
HIGH SPEED GATE CMDS FROM PROGRAMER
TO DIGITAL MUX
FROM PROGRAMER
1 SPS ROW CMDS
1 SPS COLUMN CMDS (FS29-FS42 1 & 10 SPS COLUMN CMDS 10 SPS ROW CMDS
200 SPS COL CMDS (FS43) 100 SPS COL CMDS (FS44,45,46)
50 SPS COL CMDS (FS47)
50,100,200 SPS ROW CMDS (FS15-FS22)
ROW CMD FS1-FS22
COLUMN CMDS FS23-FS47
(FS1-FS10) 1 SPS ROW CMDS
(FS23-FS28)
10 SPS ROW CMDS
EQUIVALENT SWITCH CONFIGURATION
TO HIGH SPEED GATES
SEQUENCER GATE
ANALOG INPUTS
COL 1 INPUT
ROW 1
ROW 2
ROW 3
ROW 4
ROW 5
ANALOG INPUT
ANALOG TO SEQUENCER
TO HIGH SPEED PAM GATES
COL 1
+V
PAM 1
PAM 2
PAM 3
PAM 4

LTR	DR	ENGR	DATE	APPROVAL

+5VDC PRECISION REFERENCE VOLTAGE

(DUAL SERIES REGULATOR WITH ZENER REFERENCE)

2 — 16.3 VDC — C AND W POWER SUPPLY

+5 VDC — C AND W DATA INPUTS

C AND WEA CHANNEL DETECTOR LOGIC

VOLTAGE RESET 8 DISCRETES

+5 VDC

THRUST CONTROL ASSEMBLY LOGIC (8 PAIRS)

TCA COMMANDS 16 DISCRETES

C AND WEA CHANNEL DETECTOR RELAY DRIVERS (32 STAGES)

CAUTION ANNUNCIATORS

WARNING ANNUNCIATORS

TELEMETRY

1 — 15.5 VAC — ELECTRONIC SWITCH (FUNCTIONAL REPRESENTATION)

+4 VDC AUTO RESET DELAYED

TCA FLAG RELAY DRIVERS AND RELAYS 8 STAGES

Z — PWR FROM LIGHTING — CREW DISPLAY

LTG — MASTER ALARM — 3A — PNL 16 4CB99 — V_{LMP}

TO COMM Q Z 9 8.2 — Q Z 1 8.2 — 30

3-KC TONE GENERATOR

MASTER ALARM — PNL 1 6S2

MASTER ALARM — PNL 2 6S3

LIGHTING

LAMP/TONE TEST

OFF · COMPNT · C/W 4 · C/W 3 · ENG PB - C/W 2 · C/W 1 · ALARM TONE OFF

ENG PB - C/W 2 · C/W 3 · C/W 1 · C/W 4 · ALARM TONE · COMPNT · OFF · OFF

PNL 3 16S10

MASTER FLIP FLOP AND RELAY DRIVER

SET FF / RESET — RELAY DRIVER

SET FF / RESET — RELAY DRIVER

SET FF / RESET — RELAY DRIVER

+9 VDC AUTO RESET

GL4069 MASTER ALARM 0 = ON — SC-2 — F Z 1 9.1 — 5 — TO DIGITAL POWER COMMON

K1 · K2 · K3

GL4054 C AND W POWER FAIL 0 = FAIL — SC-2 — F Z 1 9.1 — 5 — TO DIGITAL POWER COMMON

K5 · K7

C/W PWR CAUTION — 2-TO VDC FROM COMMON

CWEA DC TO DC POWER SUPPLY

16.3 VDC — 2

7 VDC

1 — 15.5 VAC

0 VDC · CD · +23 VDC · -3 VDC · +9 VDC · +4 VDC

LTG — CWEA — 2A — PNL 16 4CB147 — V_{LMP}

CAUTION AND WARNING POWER SUPPLY FAIL DETECTOR LOGIC

+23 VDC · +9 VDC · +4 VDC · -3 VDC · 0 VDC · CD

RELAY DRIVER A

RELAY DRIVER B (SAME AS A)

RELAY DRIVER C (SAME AS A)

RELAY DRIVER D (SAME AS A)

4 C AND W

SIGNATURES	DATE
DR J. McBride	4-11-68
DSGN L. F. Bunch	5-16-68
QC Betty M. Hodge	4-9-68
ENGR David N. Smith	5-15-68
APP Donald K. Hurley	4/23/68
FEC Wm. D. Gould	4/9/68
AUTH [illegible]	4-8-68

NATIONAL AERONAUTICS & SPACE ADMINISTRATION
MANNED SPACECRAFT CENTER · HOUSTON, TEXAS

CAUTION AND WARNING INSTRUMENTATION

LM
LM-3

SIZE E

DWG NO. 94

44X34

PAGE 9-5

SHEET 1 OF 1

5 WARNING

SIGNATURES	DATE	NATIONAL AERONAUTICS & SPACE ADMINISTRATION
DESIGN		MANNED SPACECRAFT CENTER — HOUSTON, TEXAS
DESIGN		INSTRUMENTATION
ENGR		C AND W WARNING
APP		
PEC		LM J 9.5
ASTN		LM-3 SHEET 1 OF 1
		SD 63-33 PAGE 5-5

LTR	DR	ENGR	DATE	APPROVAL

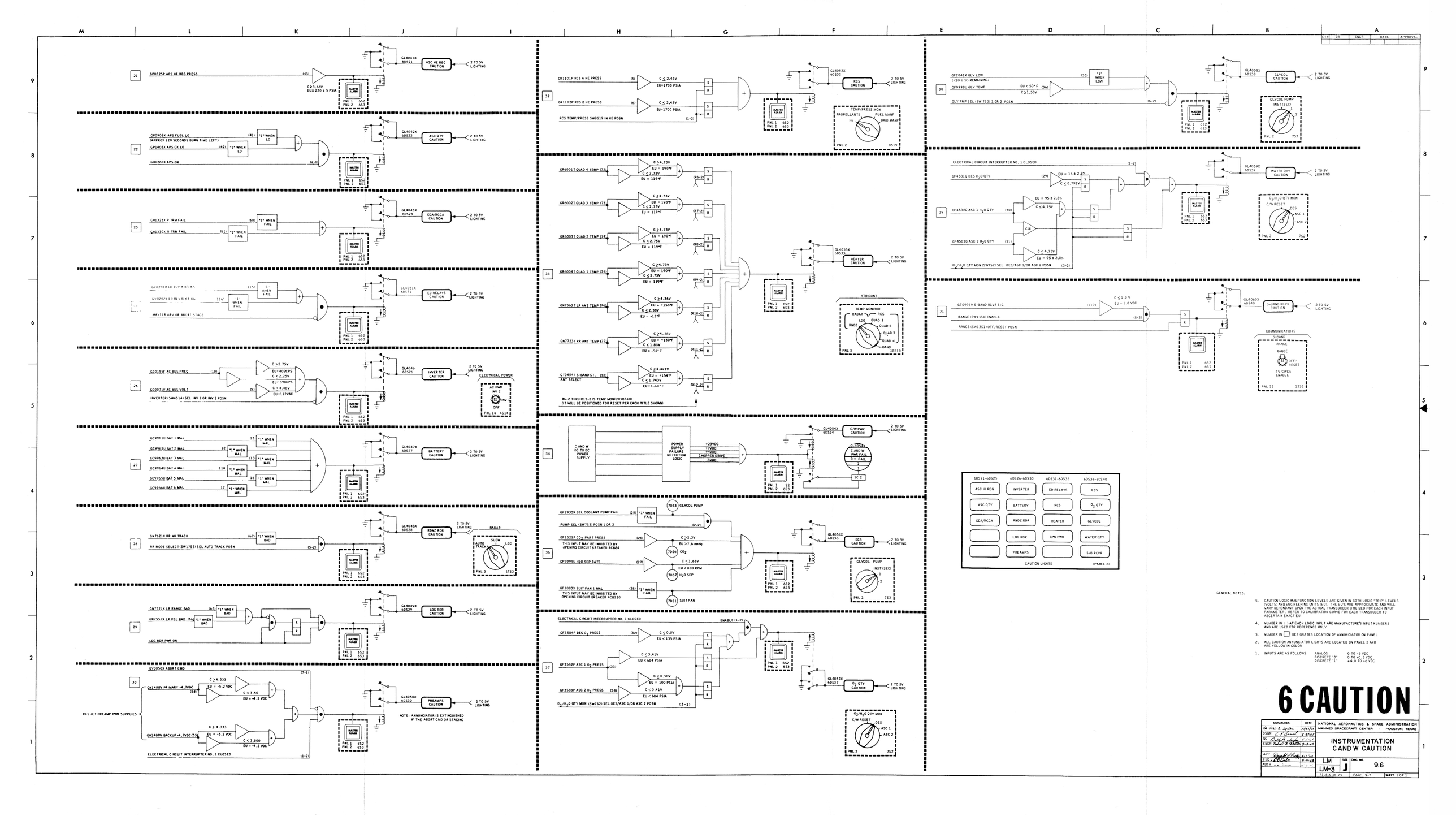
6 CAUTION
GENERAL NOTES:
5. CAUTION LOGIC MALFUNCTION LEVELS ARE GIVEN IN BOTH LOGIC "TRIP" LEVELS (VOLTS) AND ENGINEERING UNITS (EU). THE EU'S ARE APPROXIMATE AND WILL VARY DEPENDANT UPON THE ACTUAL TRANSDUCER UTILIZED FOR EACH INPUT PARAMETER. REFER TO CALIBRATION CURVE FOR EACH TRANSDUCER TO ASCERTAIN EXACT EU
4. NUMBER IN ( ) AT EACH LOGIC INPUT ARE MANUFACTURE'S INPUT NUMBERS AND ARE USED FOR REFERENCE ONLY
3. NUMBER IN ☐ DESIGNATES LOCATION OF ANNUNCIATOR ON PANEL
2. ALL CAUTION ANNUNCIATOR LIGHTS ARE LOCATED ON PANEL 2 AND ARE YELLOW IN COLOR
1. INPUTS ARE AS FOLLOWS: ANALOG 0 TO +5 VDC; DISCRETE "0" 0 TO +0.5 VDC; DISCRETE "1" +4.0 TO +6 VDC
60521-60525 ASC HI REG; ASC QTY; GDA/RCCA
60526-60530 INVERTER; BATTERY; RNDZ RDR
60531-60535 ED RELAYS; RCS; HEATER; C/W PWR; PREAMPS
60536-60540 ECS; O_2 QTY; GLYCOL; WATER QTY; S-B RCVR
CAUTION LIGHTS (PANEL 2)
INSTRUMENTATION C AND W CAUTION
NATIONAL AERONAUTICS & SPACE ADMINISTRATION MANNED SPACECRAFT CENTER - HOUSTON, TEXAS
LM-3
SIZE J
DWG NO. 9.6
PAGE 9-7
SHEET 1 OF 1

LTR	DR	ENGR	DATE	APPROVAL

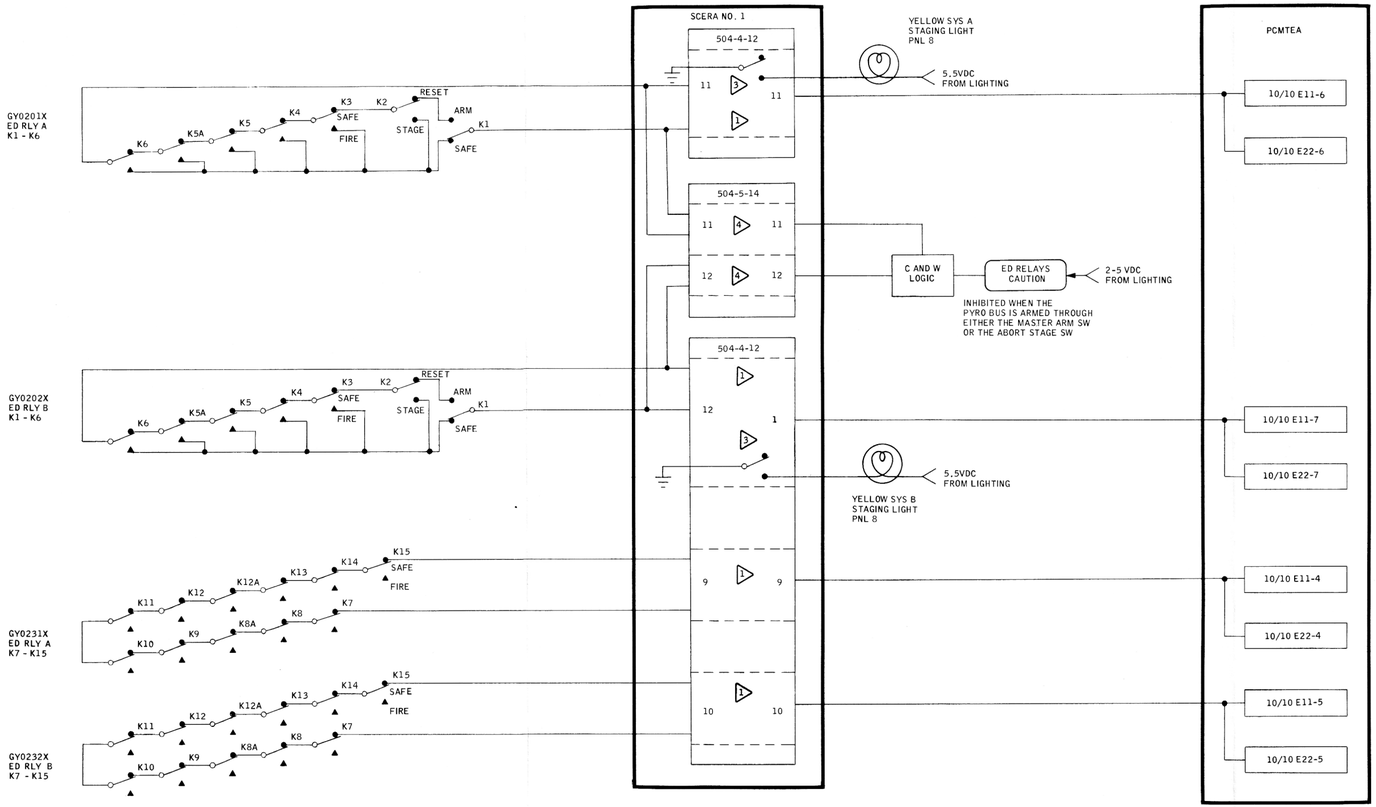

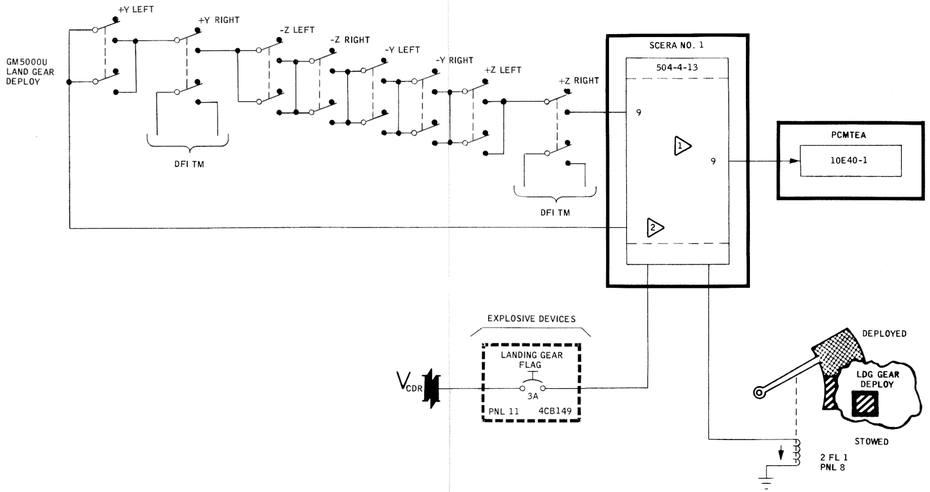

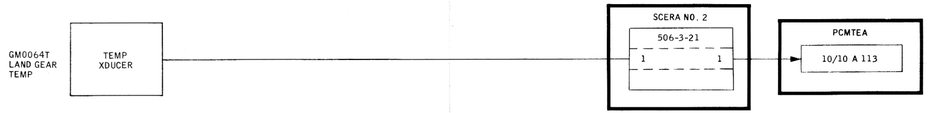

7 PYRO

NOTES:

4. A CONTACT CLOSURE ON THE INPUT OF THE SIGNAL CONDITIONER INITIATES A CAUTION LIGHT HOWEVER, THIS FUNCTION IS INHIBITED WHEN THE PYRO BUS IS ARMED THROUGH EITHER THE MASTER ARM SWITCH OR THE ABORT STAGE SWITCH
3. A CONTACT CLOSURE TO THE INPUT OF THE SIGNAL CONDITIONER ACTUATES A COMPONENT CAUTION LIGHT
2. A CONTACT CLOSURE TO THE INPUT OF THE SIGNAL CONDITIONER CAUSES POWER TO BE APPLIED TO THE FLAG
1. A CONTACT CLOSURE TO THE INPUT OF THE SIGNAL CONDITIONER EQUALS A BINARY "ONE" ON TELEMETRY

SIGNATURES	DATE
DR Eugene F. Lucas	4/7/68
DSGN Donald R. Allen	4-2-68
QC Billy D. Hogan	4-5-68
ENGR William D. Rowan	3/27/68
APP Donald K. Slayton	4/5/68
FEC J. D. Goodloe	4-8-68
AUTH Dr. Rees	4-9-68

NATIONAL AERONAUTICS & SPACE ADMINISTRATION
MANNED SPACECRAFT CENTER · HOUSTON, TEXAS

INSTRUMENTATION
PYROTECHNIC

LM
LM-3

SIZE J

DWG NO. 9.7

49.5 X 21.25 PAGE 9-8

SHEET 1 OF 1

LTR	DR	ENGR	DATE	APPROVAL

EPS
DISP
2A
PNL 16 4CB16
V_{LMP}

GC1201C BAT 1 CUR — BAT 1 CURRENT MONITOR
GC1202C BAT 2 CUR — BAT 2 CURRENT MONITOR
GC1203C BAT 3 CUR — BAT 3 CURRENT MONITOR
GC1204C BAT 4 CUR — BAT 4 CURRENT MONITOR
GC1205C BAT 5 CUR — BAT 5 CURRENT MONITOR
GC1206C BAT 6 CUR — BAT 6 CURRENT MONITOR

PCMTEA
10/10 A 91
10/10 A 106
10/10 A 122
10/10 A 167
10/10 A 63
10/10 A 95
10/10 A 67
10/10 A 94
10/10 A 68
10/10 A 102
10/10 A 75
10/10 A 87

ELECTRICAL POWER
POWER/TEMP MON
ED/OFF
SE
CDR
AC
BUS
PNL 14 4S15
PNL 14 4M3
PNL 14 4M2

SCERA NO. 1
504-1-7

SCERA NO. 2
504-4-12
504-5-13
502-2-16
502-2-17
502-2-18

BATTERY FAULT AMBER
2-5 VDC FROM LIGHTING
C & W LOGIC
BATTERY CAUTION
T > 145° F
C < -5 AMPS FOR 5 SEC
C > 150 AMPS FOR 10 SEC

10E29-1
10E29-2
10E29-3
10E29-4
10E29-5
10E29-6
10 A 72
10 A 41
10 A 79
10 A 57
10/10 A 9
10/10 A 36

ELECTRICAL POWER
ED VOLTS
ED BAT A
ED BAT B
OFF
PYRO BAT A 0.75 AH
PYRO BAT B 0.75 AH
1/8A
PNL 14 4S17

GC9961U BAT 1 MAL
GC9962U BAT 2 MAL
GC9963U BAT 3 MAL
GC9964U BAT 4 MAL
GC9965U BAT 5 MAL
GC9966U BAT 6 MAL
NORM
MAL

BAT 1 400 AH
BAT 2 400 AH
BAT 3 400 AH
BAT 4 400 AH
BAT 5 300 AH
BAT 6 300 AH

GC0201V BAT 1 VOLT
GC0202V BAT 2 VOLT
GC0203V BAT 3 VOLT
GC0204V BAT 4 VOLT
GC0205V BAT 5 VOLT
GC0206V BAT 6 VOLT

SCERA NO. 2
504-4-4
501-1-8

GC4361X BAT 1 HI TAP
GC4362X BAT 1 LOW TAP
GC4363X BAT 2 HI TAP
GC4364X BAT 2 LOW TAP
GC4365X BAT 3 HI TAP
GC4366X BAT 3 LOW TAP
GC4367X BAT 4 HI TAP
GC4368X BAT 4 LOW TAP
GC4369X BAT 5 B/U CDR
GC4370X BAT 6 NORM CDR
GC4371X BAT 5 NORM SE
GC4372X BAT 6 B/U SE
RESET HI
RESET LOW
RESET B/U
RESET NORM

BAT 1
BAT 2
BAT 3
BAT 4
BAT 5 B/U
BAT 6 NORM
BAT 5 NORM
BAT 6 B/U

PCMTEA
10E30-1
10E30-2
10E30-3
10E30-4
10E30-5
10E30-6
10E30-7
10E30-8
10E33-1
10E33-2
10E33-3
10E33-4
10/10 A 134
10/10 A 143

GC0302V
TO POWER/TEMP MON SW

EPS
DC BUS VOLT
V_{LMP}
GC0302V LMP BUS VOLT
PNL 16 4CB21
V_{CDR}
GC0301V CDR BUS VOLT
PNL 11 4CB22
BUS FAULT AMBER

SCERA NO. 2
502-2-15
SCERA NO. 1
502-2-15
C & W LOGIC
2-5 VDC FROM LIGHTING
DC BUS WARNING
V < 26.5V

504-1-18
GC0301V
GC0071V
GC0155F
TO POWER/TEMP MON SW
10/10 A 174
10/10 A 126
10/10 A 82
10 A 158

EPS
AC BUS VOLT
$V_{115A-400\sim}$
GC0071V AC BUS VOLT
GC0155F AC BUS FREQ
PNL 11 4CB27

505-1-16
503-2-17
C & W LOGIC
2-5 VDC FROM LIGHTING
INVERTER WARNING
V < 112
f > 402 HZ
f < 398 HZ

NOTE 1: HI TAP - GRAY; LO TAP - LD; OFF - BARBERPOLE
NOTE 2: ON - GRAY; OFF - BARBERPOLE
NOTE 3: CONTACTS SHOWN IN 504-4 ARE SOLID STATE SWITCHES. GROUND INPUT CLOSES SWITCH
NOTE 4: DIVIDE METER SCALE BY 2 WHEN READING DESCENT BATTERY CURRENT

8 EPS

SIGNATURES	DATE
DR H. Henderson	11/19/62
DSGN L. P. Brandt	12-6-62
QC	12-4-62
ENGR W. Allen D. Rouch	3/14/63
APP	
FEC	4-4-63
AUTH	4-4-63

NATIONAL AERONAUTICS & SPACE ADMINISTRATION
MANNED SPACECRAFT CENTER · HOUSTON, TEXAS

INSTRUMENTATION
ELECTRICAL

LM
LM-3
SIZE J
DWG NO. 9.8
55 X 38.25 PAGE 9-9 SHEET 1 OF 1

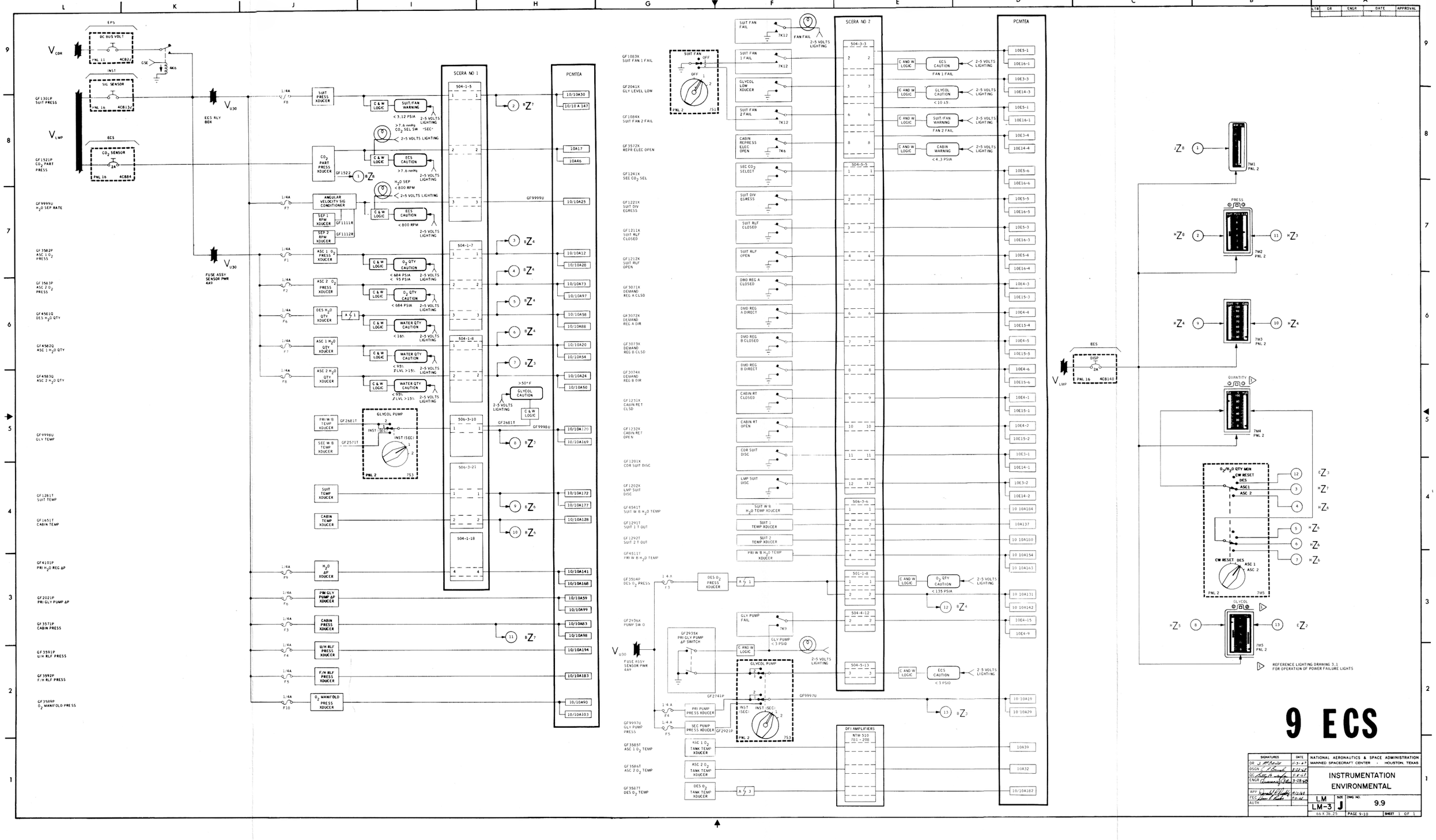

9 ECS

LTR	DR	ENGR	DATE	APPROVAL

SIGNATURES	DATE
DR J. McBride	2-3-67
DSGN C. Brock	2-24-67
DC Ralph Wade	2-6-67
ENGR Ramsey Dale	3-28-67
APP Donald K. Slayton	4/3/68
FEC John P. Mayer	4-4-68
AUTH	

NATIONAL AERONAUTICS & SPACE ADMINISTRATION
MANNED SPACECRAFT CENTER - HOUSTON, TEXAS

INSTRUMENTATION ENVIRONMENTAL

LM	SIZE	DWG NO.
LM-3	J	9.9
44 X 36.25	PAGE 9-10	SHEET 1 OF 1

LTR	DR	ENGR	DATE	APPROVAL

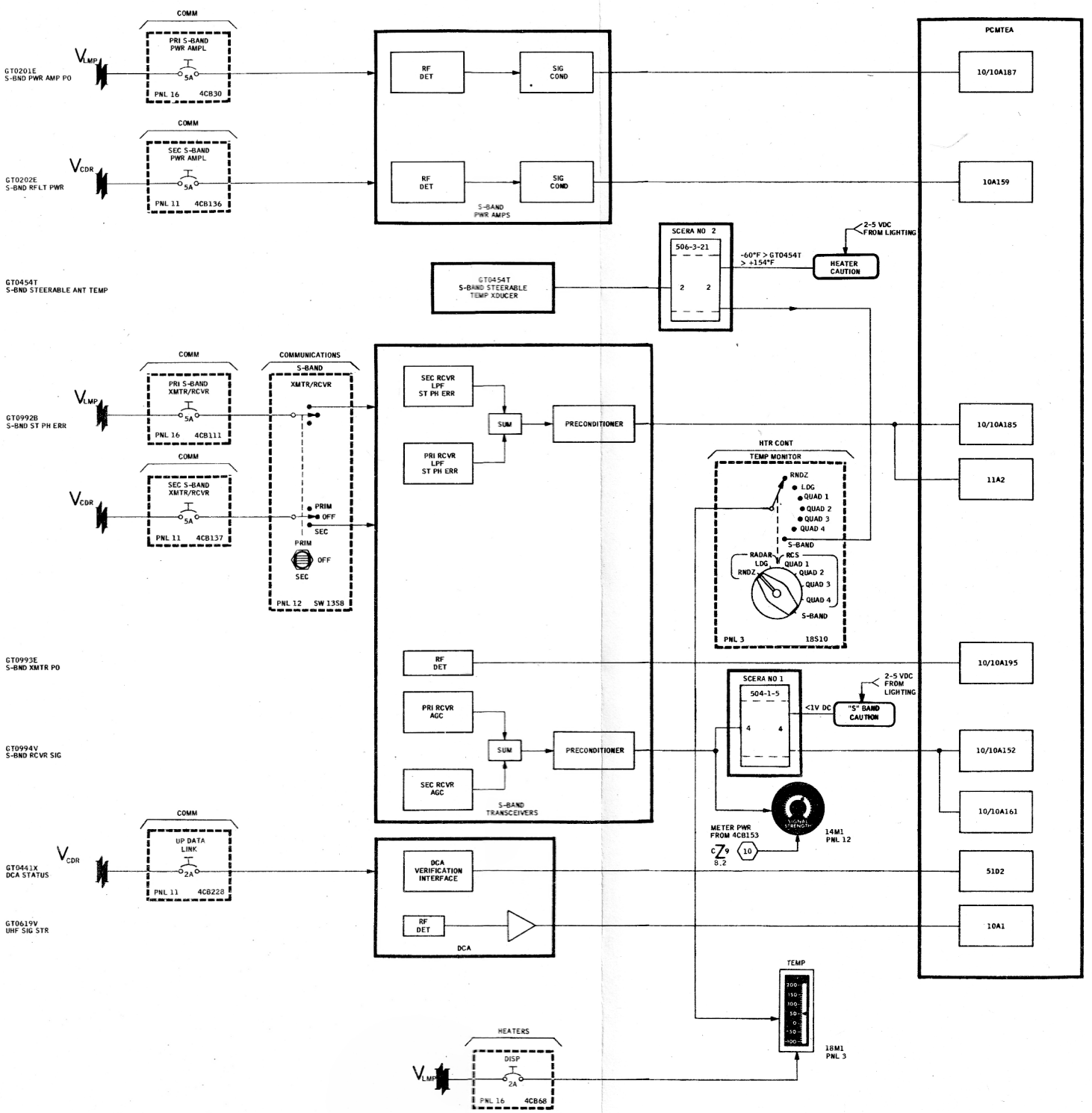

10 COMM

SIGNATURES		DATE
ORD OLSON		
DSGN		5-25-67
QC		7-7-67
ENGR		7/24/67
APP		8/3/68
FEC		7-8-68
AUTH		7-8-68

NATIONAL AERONAUTICS & SPACE ADMINISTRATION
MANNED SPACECRAFT CENTER • HOUSTON, TEXAS

INSTRUMENTATION
COMMUNICATIONS

LM	SIZE	DWG NO.
LM-3	E	9.10
44 X 34	PAGE 9-11	SHEET 1 OF 1

LTR	DR	ENGR	DATE	APPROVAL

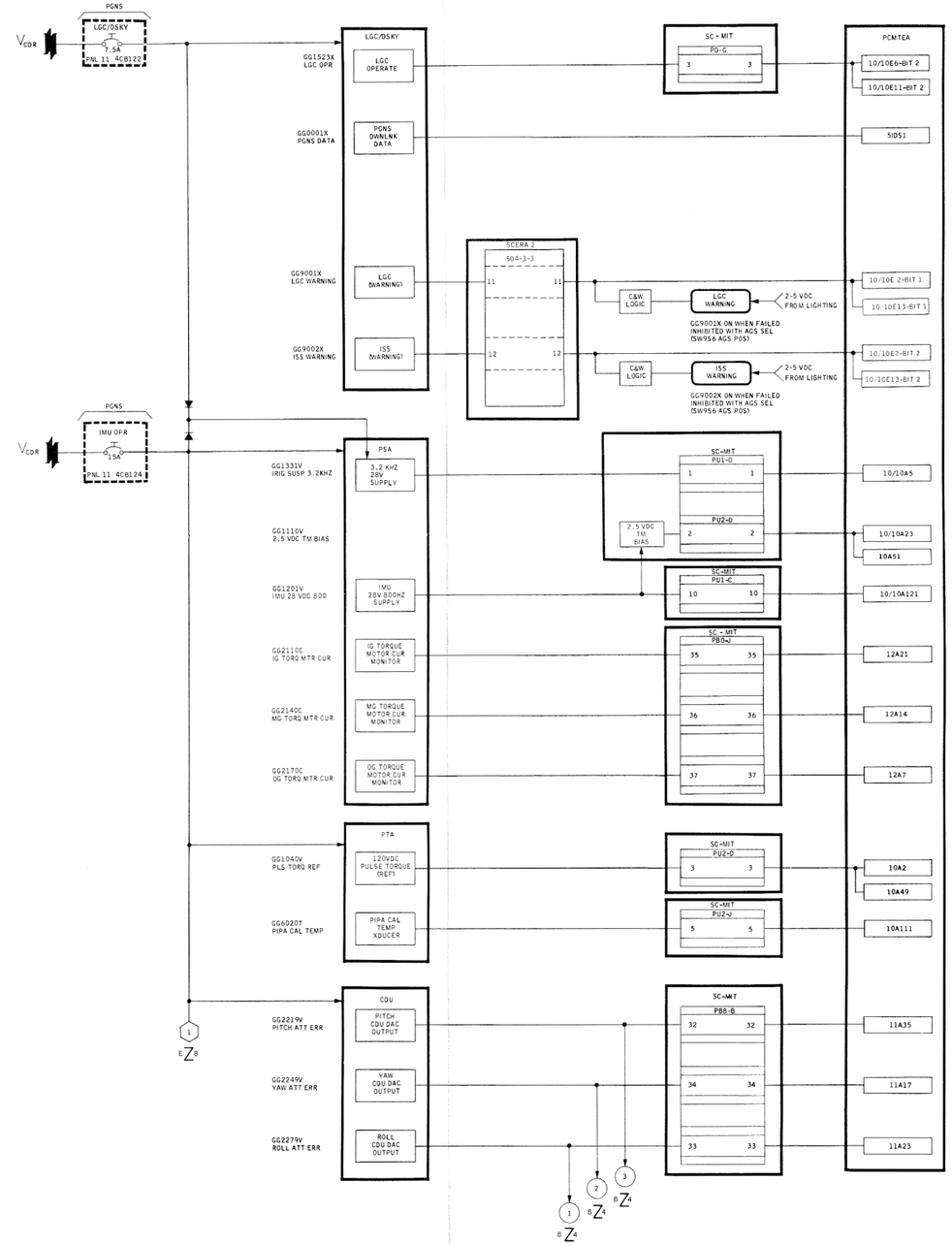

11 GUIDANCE

SIGNATURES	DATE	NATIONAL AERONAUTICS & SPACE ADMINISTRATION
DR H. D. Murphy	3-15-68	MANNED SPACECRAFT CENTER · HOUSTON, TEXAS
DSGN G. A. Smith	2-26-68	INSTRUMENTATION GUIDANCE
QC		
ENGR	2/26/68	
APP	3/5/68	LM / LM-3 · SIZE J · DWG NO. 9.11
FEC	2/26/68	40.5 X 34 · PAGE 9-12 · SHEET 1 OF 1
AUTH		

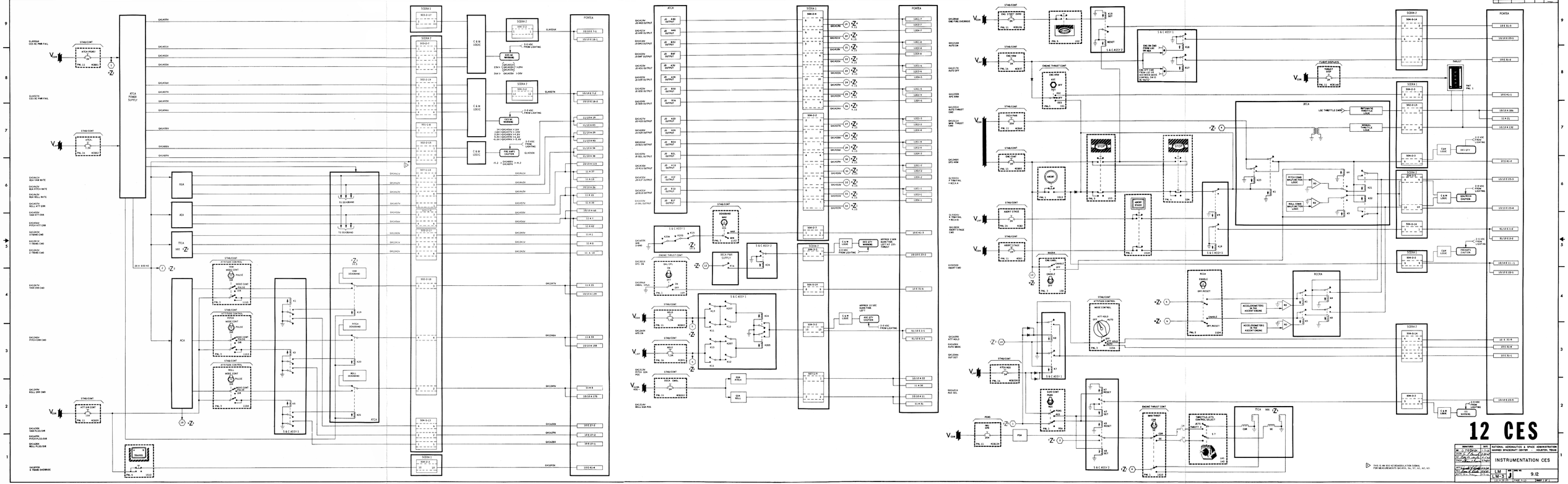
ATCA POWER SUPPLY
ATCA
ACA
RGA
TTCA
S & C ASSY 1
S & C ASSY 2
S & C ASSY 3
S & C ASSY 4
S & C ASSY 5
S & C ASSY 6
S & C ASSY 7
S & C ASSY 8
S & C ASSY

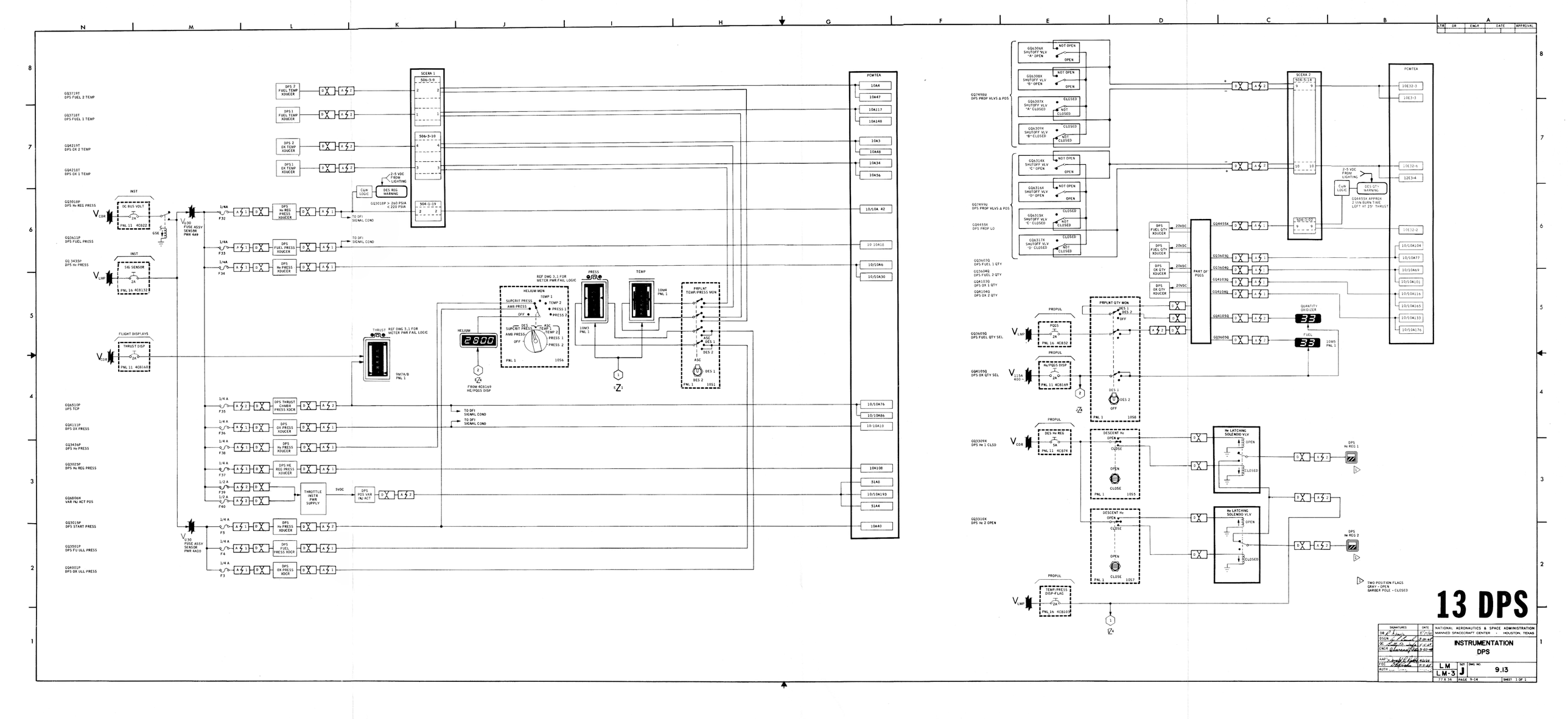
GQ3719T DPS FUEL 2 TEMP
GQ3718T DPS FUEL 1 TEMP
GQ4219T DPS OX 2 TEMP
GQ4218T DPS OX 1 TEMP
GQ3018P DPS He REG PRESS
GQ3611P DPS FUEL PRESS
GQ 3435P DPS He PRESS
GQ6510P DPS TCP
GQ4111P DPS OX PRESS
GQ3434P DPS He PRESS
GQ3025P DPS He REG PRESS
GQ6808H VAR INJ ACT POS
GQ3015P DPS START PRESS
GQ3501P DPS FU ULL PRESS
GQ4001P DPS OX ULL PRESS
INST
DC BUS VOLT
PNL 11 4CB122
INST
5KG SENSOR
PNL 16 4CB132
FLIGHT DISPLAYS
THRUST DISP
PNL 11 4CB160
FUSE ASSY SENSOR PWR 4A9
FUSE ASSY SENSOR PWR 4A10
DPS 2 FUEL TEMP XDUCER
DPS 1 FUEL TEMP XDUCER
DPS 2 OX TEMP XDUCER
DPS 1 OX TEMP XDUCER
DPS He REG PRESS XDUCER
DPS FUEL PRESS XDUCER
DPS He PRESS XDUCER
DPS THRUST CHMBR PRESS XDCR
DPS OX PRESS XDUCER
DPS He PRESS XDUCER
DPS HE REG PRESS XDUCER
THROTTLE INSTR PWR SUPPLY
DPS POS VAR INJ ACT
DPS He PRESS XDUCER
DPS FUEL PRESS XDCR
DPS OX PRESS XDCR
C&W LOGIC
DES REG WARNING
2-5 VDC FROM LIGHTING
GQ3018P > 260 PSIA < 220 PSIA
TO DFI SIGNAL COND
SCERA 1
504-3-9
506-3-10
504-1-19
PCMTEA
10A4
10A47
10A117
10A148
10A3
10A48
10A34
10A56
10/10A 42
10 10A18
10/10A6
10/10A30
10/10A76
10/10A86
10/10A10
10A108
51A8
10/10A193
51A4
10A40
REF DWG 3.1 FOR METER PWR FAIL LOGIC
THRUST
9M7A/B PNL 1
HELIUM
2800
FROM 4CB169 HE/PQGS DISP
HELIUM MON
SUPCRIT PRESS
AMB PRESS
OFF
TEMP 1
TEMP 2
PRESS 1
PRESS 2
DES 1
DES 2
ASC
TEMP 1
TEMP 2
PRESS 1
PRESS 2
PNL 1
1056
PRESS
TEMP
10M4 PNL 1
10M3 PNL 1
PRPLNT TEMP/PRESS MON
ASC
DES 1
DES 2
PNL 1
1051
GQ4798U DPS PROP VLVS A POS
GQ4799U DPS PROP VLVS B POS
GQ4455X DPS PROP LO
GQ3603Q DPS FUEL 1 QTY
GQ3604Q DPS FUEL 2 QTY
GQ4103Q DPS OX 1 QTY
GQ4104Q DPS OX 2 QTY
GQ6304X SHUTOFF VLV "A" OPEN
GQ6308X SHUTOFF VLV "B" OPEN
GQ6307X SHUTOFF VLV "A" CLOSED
GQ6309X SHUTOFF VLV "B" CLOSED
GQ6314X SHUTOFF VLV "C" OPEN
GQ6316X SHUTOFF VLV "D" OPEN
GQ6315X SHUTOFF VLV "C" CLOSED
GQ6317X SHUTOFF VLV "D" CLOSED
NOT OPEN
OPEN
CLOSED
NOT CLOSED
SCERA 2
504-5-14
504-1-09
2-5 VDC FROM LIGHTING
C&W LOGIC
DES QTY WARNING
GQ4455X APPROX 2 MIN BURN TIME LEFT AT 25° THRUST
PCMTEA
10E32-3
10E3-3
10E32-6
12E3-4
10E32-2
10/10A104
10/10A77
10/10A69
10/10A101
10/10A116
10/10A165
10/10A133
10/10A176
PART OF PQGS
DPS FUEL QTY XDUCER
DPS FUEL QTY XDUCER
DPS OX QTY XDUCER
DPS OX QTY XDUCER
20VDC
GQ3605Q DPS FUEL QTY SEL
GQ4105Q DPS OX QTY SEL
PROPUL
PQGS
PNL 16 4CB32
He/PQGS DISP
PNL 11 4CB160
PRPLNT QTY MON
DES 1
DES 2
OFF
PNL 1
1058
QUANTITY OXIDIZER
FUEL
33
10M5 PNL 1
GQ3309X DPS He 1 CLSD
GQ3310X DPS He 2 OPEN
DES He REG
5A
PNL 11 4CB76
DESCENT He
OPEN
CLOSE
PNL 1
1053
1057
He LATCHING SOLENOID VLV
DPS He REG 1
DPS He REG 2
TWO POSITION FLAGS GRAY - OPEN BARBER POLE - CLOSED
TEMP/PRESS DISP-FLAG
PNL 16 4CB103
LTR
DR
ENGR
DATE
APPROVAL
13 DPS
SIGNATURES
DATE
DR
DSGN
DR
ENGR
NASA
USE
AUTH
NATIONAL AERONAUTICS & SPACE ADMINISTRATION
MANNED SPACECRAFT CENTER · HOUSTON, TEXAS
INSTRUMENTATION
DPS
LM
LM-3
SIZE J
DWG NO 9.13
SCALE NTS
PAGE 9-14
SHEET 1 OF 1

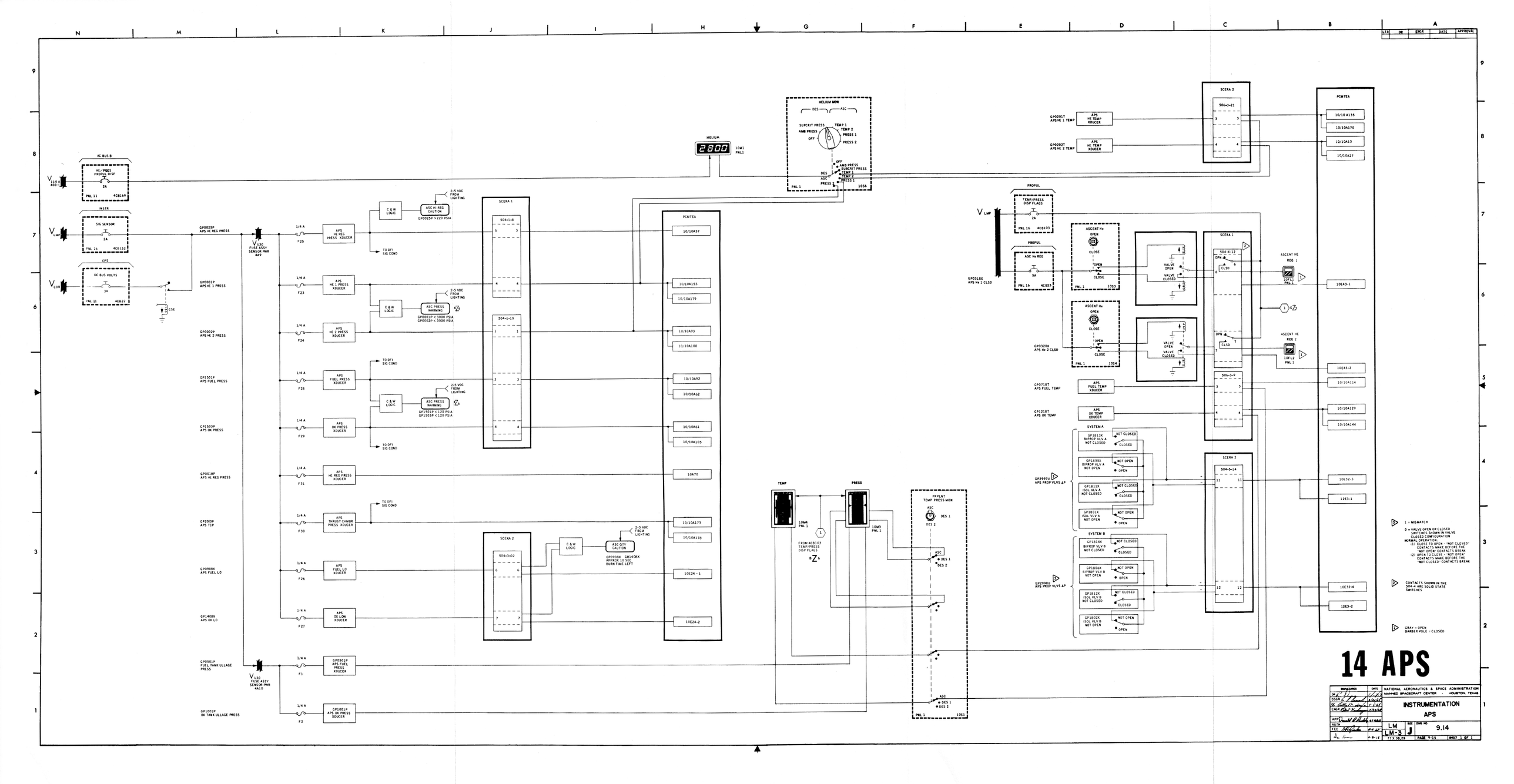
14 APS
AC BUS B
HE / PQGS PROPUL DISP
2A
PNL 11
4CB169
INSTR
SIG SENSOR
2A
PNL 16
4CB132
EPS
DC BUS VOLTS
3A
PNL 11
4CB22
CSE
GP0025P APS HE REG PRESS
GP0001P APS HE 1 PRESS
GP0002P APS HE 2 PRESS
GP1501P APS FUEL PRESS
GP1503P APS OX PRESS
GP0018P APS HE REG PRESS
GP2010P APS TCP
GP0908X APS FUEL LO
GP1408X APS OX LO
GP0501P FUEL TANK ULLAGE PRESS
GP1001P OX TANK ULLAGE PRESS
FUSE ASSY SENSOR PWR 4A9
FUSE ASSY SENSOR PWR 4A10
1/4 A
F25
F23
F24
F28
F29
F31
F30
F26
F27
F1
F2
APS HE REG PRESS XDUCER
APS HE 1 PRESS XDUCER
APS HE 2 PRESS XDUCER
APS FUEL PRESS XDUCER
APS OX PRESS XDUCER
APS HE REG PRESS XDUCER
APS THRUST CHMBR PRESS XDUCER
APS FUEL LO XDUCER
APS OX LOW XDUCER
GP0501P APS FUEL PRESS XDUCER
GP1001P APS OX PRESS XDUCER
C & W LOGIC
ASC HI REG CAUTION
GP0025P >220 PSIA
TO DFI SIG COND
ASC PRESS WARNING
GP0001P < 3000 PSIA
GP0002P < 3000 PSIA
2-5 VDC FROM LIGHTING
GP1501P < 120 PSIA
GP1503P < 120 PSIA
ASC QTY CAUTION
GP0908X GR140BX
APPROX 10 SEC BURN TIME LEFT
SCERA 1
504-1-08
504-1-19
SCERA 2
504-3-02
PCMTEA
10/10A37
10/10A153
10/10A179
10/10A93
10/10A100
10/10A92
10/10A62
10/10A61
10/10A105
10A70
10/10A173
10/10A178
10E24-1
10E24-2
HELIUM
2800
10M1
PNL1
HELIUM MON
DES
ASC
SUPCRIT PRESS
AMB PRESS
OFF
TEMP 1
TEMP 2
PRESS 1
PRESS 2
PNL 1
105A
TEMP
PRESS
10M4
PNL 1
FROM 4CB103 TEMP/PRESS DISP FLAGS
10M3
PNL 1
PRPLNT TEMP PRESS MON
ASC
DES 1
DES 2
PNL 1
105J
GP0201T APS HE 1 TEMP
GP0202T APS HE 2 TEMP
APS HE TEMP XDUCER
SCERA 2
506-3-21
PROPUL
TEMP/PRESS DISP FLAGS
2A
PNL 16
4CB103
ASC He REG
5A
PNL 16
4CB53
GP0318X APS He 1 CLSD
ASCENT He
OPEN
CLOSE
PNL 1
105J
GP0320X APS He 2 CLSD
105K
VALVE OPEN
VALVE CLOSED
SCERA 1
504-4-12
504-3-9
ASCENT HE REG 1
ASCENT HE REG 2
1OF L2 PNL 1
GP0718T APS FUEL TEMP
GP1218T APS OX TEMP
APS FUEL TEMP XDUCER
APS OX TEMP XDUCER
SYSTEM A
GP1813X BIPROP VLV A NOT CLOSED
GP1803X BIPROP VLV A NOT OPEN
GP1811X ISOL VLV A NOT CLOSED
GP1801X ISOL VLV A NOT OPEN
GP2997U APS PROP VLVS ΔP
SYSTEM B
GP1814X BIPROP VLV B NOT CLOSED
GP1804X BIPROP VLV B NOT OPEN
GP1812X ISOL VLV B NOT CLOSED
GP1802X ISOL VLV B NOT OPEN
GP2998U APS PROP VLVS ΔP
504-4-14
10E43-1
10E43-2
10/10A114
10/10A129
10/10A144
10E32-3
12E3-1
10E32-4
12E3-2
1 = MISMATCH
0 = VALVE OPEN OR CLOSED SWITCHES SHOWN IN VALVE CLOSED CONFIGURATION
NORMAL OPERATION
(1) CLOSE TO OPEN - 'NOT CLOSED' CONTACTS MAKE BEFORE THE 'NOT OPEN' CONTACTS BREAK
(2) OPEN TO CLOSE - 'NOT OPEN' CONTACTS MAKE BEFORE THE 'NOT CLOSED' CONTACTS BREAK
CONTACTS SHOWN IN THE 504-4 ARE SOLID STATE SWITCHES
GRAY = OPEN
BARBER POLE = CLOSED
NATIONAL AERONAUTICS & SPACE ADMINISTRATION
MANNED SPACECRAFT CENTER - HOUSTON, TEXAS
INSTRUMENTATION
APS
LM
LM-3
SHT J
DWG NO. 9.14
77.3.28.28
PAGE 9-15
SHEET 1 OF 1

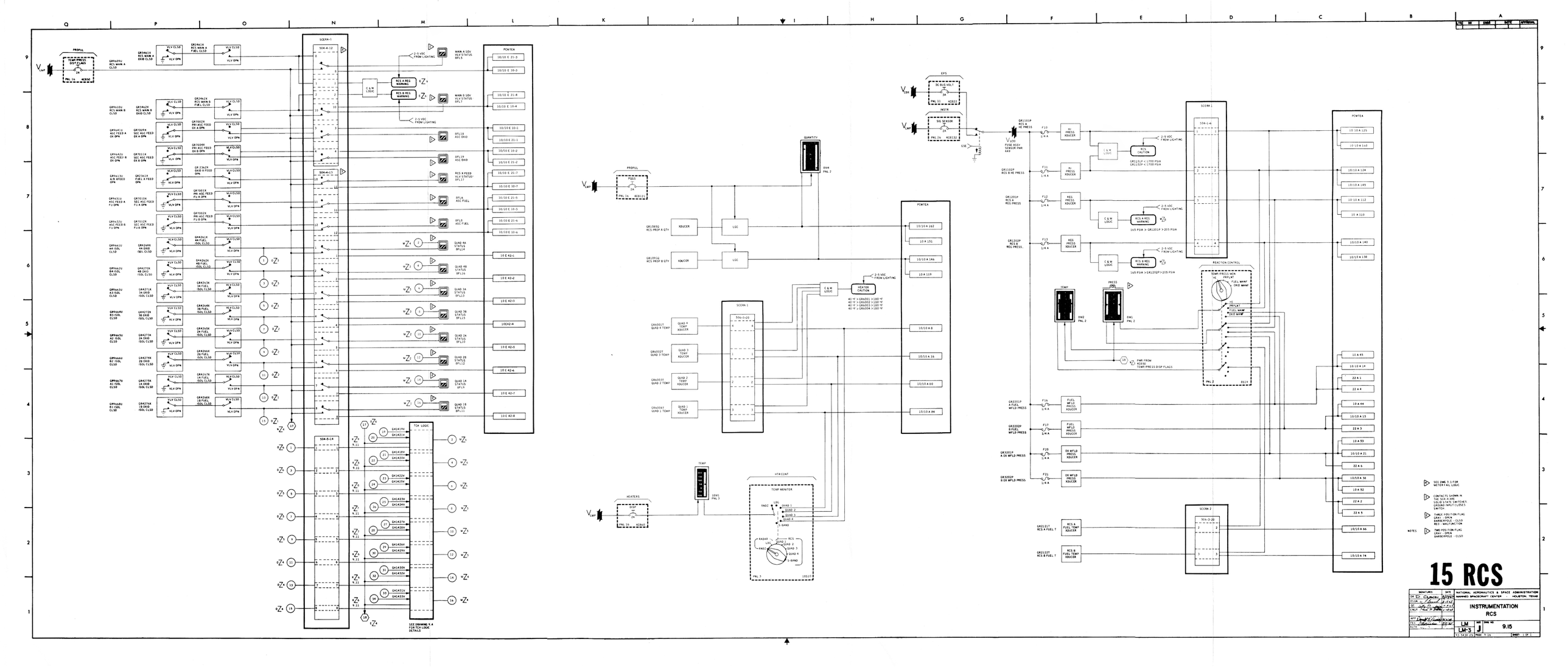
15 RCS
INSTRUMENTATION
RCS
LM-3
9.15
NATIONAL AERONAUTICS & SPACE ADMINISTRATION
MANNED SPACECRAFT CENTER · HOUSTON, TEXAS
PROPUL
EPS
INSTR
SCE#A-1
SCE#A-2
PCM/TEA
REACTION CONTROL
HTR CONT
TEMP MONITOR
QUANTITY
TEMP
HEATERS
TCA LOGIC
C & W LOGIC
RCS CAUTION
HEATER CAUTION
SEE DRAWING X-X FOR TCA LOGIC DETAILS
SEE DWG 2.1 FOR MOTHER A/L LOGIC
CONTACTS SHOWN IN ENGINE OFF/ISOLATION VALVE SWITCHES GROUND INPUT CLOSES SWITCH
THREE POSITION FLAG
GRAY - OPEN
BARBERPOLE - CLSD
RED - MALFUNCTION
TWO POSITION FLAG
GRAY - OPEN
BARBERPOLE - CLSD
NOTES

LTR	DR	ENGR	DATE	APPROVAL

PGNS
RNDZ RDR
15A
PNL 11 4CB29
V_{CDR}

AC BUS A
RNDZ RDR
2A
PNL 11 4CB206
$V_{115A\ 400\sim}$

FLIGHT DISPLAYS
CDR FDAI
2A
PNL 11 4CB209
$V_{115A\ 400\sim}$

FLIGHT DISPLAYS
SE FDAI
2A
PNL 11 4CB210
$V_{115B\ 400\sim}$

9M1 PNL 1

9M6 PNL 2

GN7611H GG3324V RR TRUN SIN
GG3225V RR TRUN COS
GN7609H GG3304V RR SHAFT SIN
GG3305V RR SHAFT COS

TRUNNION DATA RESOLVER SINE
TRUNNION DATA RESOLVER COSINE
SHAFT DATA RESOLVER SINE
SHAFT DATA RESOLVER COSINE

GN7611H 44.2K
GG3324V
TO MIT SIG COND
GN7609H 44.2K
GG3304V
TO MIT SIG COND
9.11

SHFT/TURN-4
±50°
±5°
576Ω
6.04KΩ
576Ω
6.04KΩ
± 50°
± 5°
PNL 1 9S8

FLIGHT DISPLAYS
CDR FDAI
2A
PNL 11 4CB97
V_{CDR}

RATE/ERROR MON
RNDZ RADAR
LDG RDR CMPTR
RNDZ RADAR
LDG RDR/CMPTR
PNL 1 9S2

9K33A
9K32A
AUX SW RLY BOX

9M2 PNL 1

X-POINTER SCALE
HI MULT
LO MULT
HI MULT
LO MULT
PNL 3 9S17

FLIGHT DISPLAYS
EVENT TIMER SE FDAI
2A
PNL 16 4CB126
V_{LMP}

RATE ERROR MON
RNDZ RADAR
LDG RDR CMPTR
RNDZ RADAR
LDG RDR/CMPTR
PNL 2 9S7

9K31B
9K30A
AUX SW RLY BOX

9M3 PNL 2

X-POINTER SCALE
HI MULT
LO MULT
HI MULT
LO MULT
PNL 3 9S18

GN7610R RR SHAFT ANGLE RATE
GN7612R RR TRUNNION ANGLE RATE

SHAFT CDU
TRUNNION CDU

FLIGHT DISPLAYS
XPNTR
2A
PNL 11 4CB133
V_{CDR}

FLIGHT DISPLAYS
X-PNTR
2A
PNL 16 4CB134
V_{LMP}

RNG/ALT MON
RNG/RNG RT
ALT/ALT RT
RNG/RNG RT
ALT/ALT RT
PNL 1 9S4

9M9 PNL 1

GN7613H RR RANGE (XPONDER MODE)
GN7614R RANGE/RATE (PRF)

TRANSPONDER MODE RANGE TRACKER
FREQ TRACKER

FLIGHT DISPLAYS
RNG/RNG RT
ALT/ALT RT
PNL 11 4CB123
RNG/RNG RT
ALT/ALT RT
PNL 11 4CB204
V_{CDR}
$V_{115A\ 400\sim}$

NO TRACK
FROM LIGHTING CONTROL ASSY
Z
PNL 3 17OS1

RD
PART OF COMPUTER INTERFACE UNIT

SECRA 2
504-3-02
5 5

SCERA 1
506-3-21
5

RADAR
SLEW LGC
AUTO TRACK
LGC SLEW AUTO
PNL 3 TRACK 17S3

C & W LOGIC

2-5 VDC FROM LIGHTING
RNDZ RDR CAUTION

GN7621

PCMTEA
10/10 E1-3
10/10 E12-3
10 A 31
10 A 55

GN7621X RR NO TRACK

TRANSPONDER MODE RANGE TRACKER
FREQ TRACKER

GN7723T RR ANT TEMP

TEMP SENSOR ON ANT ASSEMBLY

HTR CONT
C & W RESET
C & W LOGIC
2-5 VDC FROM LIGHTING
HEATER CAUTION
-51°F > T > 149°F
GN 7723

TEMP MONITOR
RADAR LDG RNDZ
RCS QUAD 1 QUAD 2 QUAD 3 QUAD 4 S-BAND
PNL 3 18S10

TEMP
18M1 PNL 3

GN7644V RR ATM OUT TRUNNION
GN7646V RR ATM OUT SHAFT
GN7642E RR RF PWR OUT
GN7648V RR ATM AGC OUT

ANGLE TRACKER TRUNNION OUT
ANGLE TRACKER SHAFT OUT
RF PWR OUT
ANGLE TRACKER AGC OUT

RADAR
RNDZ RADAR TRUN ERR
SHAFT ERR
XMTR PWR
AGC
TEST MONITOR
VEL XMTR
LDG RADAR PWR
ALT XMTR
PNL 3 17S8

17M1 PNL 3

PGNS
SIG STR DISP
2A
PNL 11 4CB154
V_{CDR}

HEATERS
DISP
2A
PNL 16 4CB68
V_{LMP}

SEE DWG 3.1 FOR METER POWER FAIL LOGIC.

16 RR

SIGNATURES		DATE
DR	D Olson	3/12/67
DSGN	G. P. Brush	3-27-68
QC	Lee D. Wolfe	4-4-68
ENGR	A.R. Parkinson	3/27/68
APP	Donald K Reilly	4/4/68
AUTH		
FEC	J. H. Kinder	4-4-68
	Don Young	4-8-68

NATIONAL AERONAUTICS & SPACE ADMINISTRATION
MANNED SPACECRAFT CENTER · HOUSTON, TEXAS

INSTRUMENTATION
RR

LM
LM-3
SIZE E
DWG NO. 9.16
44X34
PAGE 9-17
SHEET 1 OF 1

MSC Form 1814 E (REV OCT 65)

LTR	DR	ENGR	DATE	APPROVAL

LANDING RADAR ELECTRONIC ASSY

GN7524L LR LATERAL VEL — VELOCITY CONVERTER (D/A)

GN7525L LR FWD VEL — VELOCITY CONVERTER (D/A)

GN 7527H LR RANGE — RANGE VEL X-AXIS CONVERTER

GN7523H LR LANDING VEL/ALT RATE — RANGE VEL X-AXIS CONVERTER

GN7545E LR VEL XMIT RF PW OUT — XTAL DETECTOR AND BUFFER

GN 7546E LR ALT XMIT RF PW OUT — XTAL DETECTOR AND BUFFER

GN7563T LR ANT TEMP — LANDING RADAR ANTENNA ASSY: TEMP SENSOR ON ANTENNA ASSEMBLY

GN7521X LR RANGE BAD — LANDING RADAR ELECTRONIC ASSY: SOLID STATE SW CLOSURE

GN7557X LR VEL BAD — LANDING RADAR ELECTRONIC ASSY: SOLID STATE SW CLOSURE

FLIGHT DISPLAYS

V_{CDR} — X-PNTR 2A — PNL 11 4CB133

V_{LMP} — X-PNTR 2A — PNL 16 4CB134

V_{CDR} — RNG/RNG RT ALT/ALT RT — PNL 11 4CB123

$V_{115\,A\ 400\,HZ}$ — RNG/RNG RT ALT/ALT RT — PNL 11 4CB204

MODE SEL: LDG RADAR, PGNS, AGS — PNL 1 9S9

9K29A&B

RNG/ALT MON: RNG/RNG RT, ALT/ALT RT — PNL 1 9S4

B+ OUT FOR ALT/ALT RT FUNCTION FROM INTERNAL PWR SUPPLY IN 9M9 ASSEMBLY

B+

RANGE ALT; RANGE RATE ALT RATE — 9M9 PNL 1

RATE/ERR MON: RNDZ RADAR, LDG RDR / CMPTR — RNDZ RADAR — LDG RDR/CMPTR PNL 2 9S7

RATE/ERR MON: RNDZ RDR, LDG RDR / CMPTR — RNDZ RADAR — LDG RDR/CMPTR PNL 1 9S2

9K32A

9K30A

9M2 PNL 1

9M3 PNL 2

X-POINTER SCALE: HI MULT, LO MULT — HI MULT, LO MULT — PNL 3 9S17

X-POINTER SCALE: HI MULT, LO MULT — HI MULT, LO MULT — PNL 3 9S18

SEE DWG 3.1 FOR METER FAIL LIGHT LOGIC

RADAR

TEST MONITOR: TRUN ERR, SHAFT ERR, XMTR PWR, AGC, VEL XMTR, ALT XMTR; LDG RADAR PWR, RNDZ RADAR AGC, XMTR PWR, VEL XMTR, ALT XMTR, SHAFT ERR, TRUN ERR — PNL 3 17S8

17M1 PNL 3

PGNS

V_{CDR} — SIG STR DISP 2A — PNL 11 4CB154

PGNS

V_{CDR} — LDG RDR 10A — PNL 11 4CB105

2-5 VDC FROM LIGHTING — HEATER CAUTION (-15°F > GN7563 > +150°F) — C AND W LOGIC — RESET

HEATER CONT

TEMP MONITOR: S-BAND, QUAD 4, QUAD 3, QUAD 2, QUAD 1, LDG, RNDZ; RADAR, RCS: LDG, RNDZ, QUAD 1, QUAD 2, QUAD 3, QUAD 4, S-BAND — PNL 3 18S10

HEATERS

V_{LMP} — DISP 2A — PNL 16 4CB68

18M1 PNL 3

SCERA 1: 506-3-21

SCERA 2: 504-3-02

C AND W LOGIC — L/R RADAR CAUTION — 2-5 VDC FROM LIGHTING

PCMTEA

10/10A164

10/10A149

10/10E 1 BIT 1

10/10E 12 BIT 1

10/10E 1 BIT 2

10/10E 12 BIT 2

17 LR

SIGNATURES		DATE
DR	Daniel C. Allen	3-10-68
DSGN	L. P. Kinard	3-25-68
QC	Betty A. Taylor	4-9-68
ENGR	Herbert Fellers	5-21-68
APP	Ronald R. Ruthy	4/3/68
FEC	Jean P. Linder	4-4-68
AUTH	Lyn Briscoe	4-8-68

NATIONAL AERONAUTICS & SPACE ADMINISTRATION
MANNED SPACECRAFT CENTER · HOUSTON, TEXAS

INSTRUMENTATION
LR

LM
LM-3

SIZE E

DWG NO. 9.17

44 X 34

PAGE 9-18

SHEET 1 OF 1

MSC Form 3616 R (REV OCT 65)

LTR	DR	ENGR	DATE	APPROVAL

STAB/CONT
AGS
2A
PNL 11 4CB203

V_{115} 400 HZ

LGC
(LM GUIDANCE COMPUTER)

AGS INITIALIZATION
(PGNS DOWNLINK DATA)

AEA
(ABORT ELECTRONICS ASSEMBLY)
3

DEDA
224
OPR ERR
+53582
+ 7 8 9
− 4 5 6
0 1 2 3
HOLD
PNL 3

ALT/ALT RT
LAT VEL

9M9 PNL 1
9M1 PNL 1
1 9M6 PNL 2
9M2 PNL 1
2 9M3 PNL 2

PCMTEA

PGNS DOWNLINK STOP PULSES
AGS DOWNLINK BIT SYNC PULSES
AGS DOWNLINK STOP PULSES
PGNS DOWNLINK BIT SYNC PULSES

DATA TRANSFER BUFFER OF PCMTEA

GI0001X
AGS DOWNLINK DATA TO TM

STAB/CONT
AEA
10A
PNL 16 4CB28

GI3232X
AEA TEST MODE FAIL

AGS DOWNLINK DATA TO TM GI0001X
GI3232X AEA TEST MODE FAIL

GI0001X
51DS2

V_{LMP}

STAB/CONT
ASA
20A
PNL 16 4CB79

GI3301T
ASA TEMP

GI3215V
ASA +12 VDC

GI3233F
ASA FREQ 400 HZ (29 VRMS)

DATA

GI3301T ASA TEMP
GI3215V ASA +12VDC
GI3233F ASA 400HZ (29 VRMS)

ASA
(ABORT SENSOR ASSEMBLY)

GI3214V ASA +28VDC

GI3214X
ASA +28 VDC

GL4028X
AGS PWR FAIL

GI3306X
AGS STBY

GI3305X
AGS WARMUP

AGS STATUS
OPERATE
STANDBY
OFF
PNL 6 12517

GI3306X
GI3305X

SCERA 1
504-2-4
506-3-10
502-2-15
505-1-16

SCERA 2
502-2-15
504-5-13
504-3-2

CWEA

AGS WARNING
2-5 VDC FROM LIGHTING

GI3215V <10.8>13.2VDC
GI3233F <385>415HZ
GI3214V <25.2>30.8VDC
GI3232X TEST MODE FAIL

SCERA 2
504-3-2

GI3301T
GL4028X
GI3306X
GI3305X

10A65
10A89
10E7-BIT 3
10E18-BIT 3
10E27-BIT 5
10E27-BIT 4

3 AEA NOW HAS SELF CONTAINED OSCILLATOR (CLOCK).

2 TOTAL OF TWO X-POINTER METERS- ONE ON PANEL 1 AND THE OTHER ON PANEL 2.

1 TOTAL OF TWO FDAI METERS - ONE ON PANEL 1 AND THE OTHER ON PANEL 2.

18 AGS

SIGNATURES	DATE
DR Alice Stevens	8-25-67
DSGN G. P. Bunch	3-25-68
QC Betty D. Hubbard	3-26-68
ENGR Harold Moore	3/21/68
APP Donald D. Duffy	9/9/68
AUTH	
FEC Thomas L. Gilbert	4-4-68
Ben Bracy	4-4-68

NATIONAL AERONAUTICS & SPACE ADMINISTRATION
MANNED SPACECRAFT CENTER • HOUSTON, TEXAS

INSTRUMENTATION
AGS

LM-3 | SIZE E | DWG NO. 9.18
44 X 34 | PAGE 9-19 | SHEET 1 OF 1

MSC Form 1616 E (REV OCT 65)

TABLE 9-I. SIGNAL CONDITIONING SUBASSEMBLIES

SUB ASSY	FUNCTION	INPUTS		CHANNEL AVAILABILITY	REMARKS
		BI-POLAR	UNI-POLAR		
501-1	DC AMP	-100 MV TO +100 MV -2.5 V TO +2.5 V	0 TO +200 MV 0 TO +5.0 V	4 SINGLE CHANNELS	RECEIVES ANALOG VOLTAGES AND CONDITIONS THEM TO A ZERO TO +5.0 VDC FULL SCALE OUTPUT.
502-2	ATTENUATOR	-20 VDC TO +20 VDC -2.5 VDC TO +2.5 VDC	0 TO +40 VDC 0 TO +5.0 VDC	4 SINGLE CHANNELS	PROVIDES ISOLATION AND ATTENUATES INPUT SIGNAL TO A ZERO TO +5.0 VDC OUTPUT.
503-2	AC TO DC CONVERTER	0 TO 21 VOLTS RMS 0 TO 31 VOLTS RMS 0 TO 100 VOLTS RMS 0 TO 150 VOLTS RMS		3 SINGLE CHANNELS	FULL SCALE OUTPUT (5.0 VDC)
504-1	ANALOG BUFFER	0 TO 5 VDC		4 SINGLE CHANNELS	UNITY GAIN DEVICE
504-2	DISCRETE BUFFER	DISCRETE SWITCH CLOSURE		10 DUAL CHANNELS	OUTPUT IS A STEP VOLTAGE BETWEEN 4 AND 6 VDC FOR "ON" AND 0+.5 VDC FOR "OFF". -0
504-3	DISCRETE BUFFER	DISCRETE SWITCH CLOSURE		12 DUAL CHANNELS	OUTPUT IS A STEP VOLTAGE BETWEEN 4 AND 6 VDC FOR "ON" AND 0+.5 VDC FOR "OFF". -0
504-4	DISCRETE BUFFER	DISCRETE SWITCH CLOSURE		12 DUAL CHANNELS AND SOLID STATE SW CLOSURES	ONE OUTPUT IS A STEP VOLTAGE BETWEEN 4 AND 6 VDC FOR "ON" AND 0+.5 VDC FOR "OFF". -.1 OTHER OUTPUT IS A SOLID STATE SW CLOSURE USED NORMALLY FOR FLAG INDICATORS.
504-5	DISCRETE BUFFER	DISCRETE SWITCH CLOSURE		12 CHANNELS SINGLE STEP	OUTPUT IS A STEP VOLTAGE BETWEEN 4 AND 6 VDC FOR "ON" AND 0+.5 VDC FOR "OFF". -.1
505-1	FREQUENCY TO DC CONVERTER	20 TO 130 VOLTS RMS WITH FREQUENCY VARIATIONS BETWEEN 380 AND 420 CPS		3 SINGLE CHANNELS	OUTPUT OF ZERO VOLTS DC WILL CORRESPOND TO 380 CPS AND +5 VDC WILL CORRESPOND TO 420 CPS.
506-2,3	RESISTANCE TO DC CONVERTER	BRIDGE UNBALANCE ERRORS OF 0 TO 130 MV		4 DUAL CHANNELS	CONVERTS A RESISTANCE CHANGE TO A 0 TO +5.0 VDC OUTPUT
507-1	PHASE DEMODULATOR	15 TO 26 VOLTS RMS		4 SINGLE CHANNELS	COMPARES INPUT PHASE AND AMPLITUDE WITH A REFERENCE SIGNAL AND PRODUCES A 0-5 VDC OUTPUT AS COMPARED TO THE REFERENCE.

TABLE 9-II.- MEASUREMENTS ON UNREGULATED DC

Circuit Breaker 4CB132, 2A, LMP Pnl Signal Sensor Fuse Assy Sensor Power

Fuse No.	Meas No.	Field Title
I. Block 4A9 Connector		
F1	GF3582P	ASC 1 O_2 Press
2	GF3583P	ASC 2 O_2 Press
3	GF3584P	DES O_2 Press
4	GF2741P	Gly Pump Press
5	GF2921P	GF9997U
6	GF4581Q	DES H_2O Qty
7	GF4582Q	ASC 1 H_2O Qty
8	GF4583Q	ASC 2 H_2O Qty
9	--	--
10	GR1101P	RCS A He Press
11	GR1102P	RCS B He Press
12	GR1201P	RCS A Reg Press
13	GR1202P	RCS B Reg Press
14	--	--
15	--	--
16	GR2201P	A Fuel Mfld Press
17	GR2202P	B Fuel Mfld Press
18	--	--
19	--	--
20	GR3201P	A Ox Mfld Press
21	GR3202P	B Ox Mfld Press
22	--	--
23	GP0001P	APS He 1 Press
24	GP0002P	APS He 2 Press
25	GP0025P	APS He Reg Press
26	GP0908X	APS Fuel Lo
27	GP1408X	APS Ox Lo
28	GP1501P	APS Fuel Press
29	GP1503P	APS Ox Press
30	GP2010P	APS TCP
31	GP0018P	APS He Reg Press (Redundant)
32	GQ3018P	DPS He Reg Press
33	GQ3611P	DPS Fuel Press
34	GQ3435P	DPS He Press
35	GQ6510P	DPS TCP
36	GQ4111P	DPS Ox Press
37	GQ3025P	DPS He Reg Press (Redundant)
38	GQ3436P	DPS He Press (Redundant)
39	Throttle Instrumentation	
40	Reference Power Supply for GQ6806H	
II. Block 4A10		
1	GP0501P	APS Fu Ull Press
2	GP1001P	APS Ox Ull Press
3	GQ3501P	DPS Fu Ull Press
4	GQ4001P	DPS Ox Ull Press
5	GQ3015P	DPS Start Tank Press
6-40	Not Loaded	
III. ECS Relay Box		
3	GF3571P	Cabin Press
4	GF3591P	U/F Rlf Press
5	GF3592P	F/H Rlf Press
6	GF2021P	Pri Gly Pump ΔP
7	GF1111F / GF1112F	H_2O Sep Rate / GF9999U
8	GF1301P	Suit Press
9	GF4101P	Pri H_2O Reg ΔP
10	GF3589P	O_2 Manifold Press

TABLE 9-III.- TELEMETERED AND DISPLAYED PARAMETERS

MEAS ID	MEAS DESCRIPTION	PAM LOCATION PAM NO/SEQ NO	SCERA LOCATION SCERA/LOC		TM DATA RANGE LOW	HIGH	UNITS	RSS ACC PCT	ONBOARD DISPLAY RANGE LOW	HIGH	RSS ACC PCT
GC0071V	AC BUS VOLTS	3-10	1/17	1/18	0	125	VRMS	1.3	62.5	125	4.6
GC0155F	AC BUS FREQ	3-14	1/16	1/18	380	420	CPS	1.7	---		
GC0201V	BAT 1 VOLT	1-8	2/16		0	40	VDC	1.1	20	40	2.8
GC0202V	BAT 2 VOLT	1-7	2/16		0	40	VDC	1.1	20	40	2.8
GC0203V	BAT 3 VOLT	1-9	2/16		0	40	VDC	1.1	20	40	2.8
GC0204V	BAT 4 VOLT	1-7	2/16		0	40	VDC	1.1	20	40	2.8
GC0205V	BAT 5 VOLT	2-5	2/17		0	40	VDC	1.1	20	40	2.8
GC0206V	BAT 6 VOLT	2-6	2/18		0	40	VDC	1.1	20	40	2.8
GC0301V	CDR BUS VOLT	3-12/3-14	1/15	1/18	0	40	VDC	1.3	20	40	3.1
GC0302V	LMP BUS VOLT	3-12/1-12	2/8	2/15	0	40	VDC	1.5	20	40	3.5
GC1201C	BAT 1 CUR	1-9/3-11	---		0	60	AMPS	1.6	0	120	2.5
GC1202C	BAT 2 CUR	3-12/1-13	---		0	60	AMPS	1.6	0	120	2.5
GC1203C	BAT 3 CUR	3-9/1-9	---		0	60	AMPS	1.6	0	120	2.5
GC1204C	BAT 4 CUR	3-9/3-10	---		0	60	AMPS	1.6	0	120	2.5
GC1205C	BAT 5 CUR	1-8/3-11	---		0	120	AMPS	1.6	0	120	2.5
GC1206C	BAT 6 CUR	3-9/1-9	---		0	120	AMPS	1.6	0	120	2.5
GC4361X	BAT 1 HI TAP	---	2/4		1 = HI				---		
GC4362X	BAT 1 LO TAP	---	2/4		1 = LO				---		
GC4363X	BAT 2 HI TAP	---	2/4		1 = HI				---		
GC4364X	BAT 2 LO TAP	---	2/4		1 = LO				---		
GC4365X	BAT 3 HI TAP	---	2/4		1 = HI				---		
GC4366X	BAT 3 LO TAP	---	2/4		1 = LO				---		
GC4367X	BAT 4 HI TAP	---	2/4		1 = HI				---		
GC4368X	BAT 4 LO TAP	---	2/4		1 = LO				---		
GC4369X	BAT 5 B/U CDR	---	2/4		1 = ON				---		
GC4370X	BAT 6 NORM CDR	---	2/4		1 = ON				---		
GC4371X	BAT 5 NORM LMP	---	2/4		1 = ON				---		
GC4372X	BAT 6 B/U LMP	---	2/4		1 = ON				---		
GC9961U	BAT 1 MAL	---	2/12	2/13	1 = MAL				---		
GC9962U	BAT 2 MAL	---	2/12	2/13	1 = MAL				---		
GC9963U	BAT 3 MAL	---	2/12	2/13	1 = MAL				---		
GC9964U	BAT 4 MAL	---	2/12	2/13	1 = MAL				---		
GC9965U	BAT 5 MAL	---	2/12	2/13	1 = MAL				---		
GC9966U	BAT 6 MAL	---	2/12	2/13	1 = MAL				---		
GF1083X	SUIT FAN 1 MAL	---	2/3		1 = MAL				---		
GF1084X	SUIT FAN 2 MAL	---	2/3		1 = MAL				---		

TABLE 9-III.- TELEMETERED AND DISPLAYED PARAMETERS - CONTINUED

MEAS ID	MEAS DESCRIPTION	PAM LOCATION PAM NO/SEQ NO	SCERA LOCATION SCERA/LOC	TM DATA RANGE LOW	HIGH	UNITS	RSS ACC PCT	ONBOARD DISPLAY RANGE LOW	HIGH	RSS ACC PCT
GF1087X	SEL SUIT COMP FAIL	---	---		---				---	
GC1201X	CDR SUIT DISC	---	2/5		1 = CLOSED				---	
GF1202X	LMP SUIT DISC	---	2/5		1 = CLOSED				---	
GF1211X	SUIT RLF CLSD	---	2/5		1 = CLOSED				---	
GF1212X	SUIT RLF OPEN	---	2/5		1 = OPEN				---	
GF1221X	SUIT DIV EGRESS	---	2/5		1 = CLOSED				---	
GF1231X	CABIN RET CLSD	---	2/5		1 = CLOSED				---	
GF1232X	CABIN RET OPEN	---	2/5		1 = OPEN				---	
GF1241X	SEC CO_2 SEL	---	2/5		1 = SEC SELECTED				---	
GF1281T	SUIT TEMP	4-14/2-14	1/21	20	120	DEG F	2.8	40	100	5.0
GF1291T	SUIT 1 T OUT	2/12	2/6	20	120	DEG F	2.8		---	
GF1292T	SUIT 2 T OUT	4-15	2/6	20	120	DEG F	2.8		---	
GF1301P	SUIT PRESS	3-12/1-12	1/5	0	10	PSIA	2.0	0	10	2.8
GF1521P	CO_2 PART PRESS	2-5/4-8	1/5	0	30	MMHG	0.9		---	
GF1522P	CO_2 PART PRESS	---	---		---			0	30 MMHG	
GF1651T	CABIN TEMP	4-12	1/21	20	120	DEG F	2.8	40	100	5.0
GF2021P	PRI GLY PUMP ΔP	3-9/1-10	---	0	50	PSID	1.9		---	
GF2041X	GLY LEVEL LOW	---	2/3		1 = LOW				---	
GF2935X	SEL GLY PUMP FAIL	---	2/13		---				---	
GF2936X	GLY PUMP SWITCHOVER	---	2/12		1 = FAIL				---	
GF3071X	DEMAND REG A CLSD	---	2/5		1 = CLOSED				---	
GF3072X	DEMAND REG A DIR	---	2/5		1 = DIRECT				---	
GF3073X	DEMAND REG B CLSD	---	2/5		1 = CLOSED				---	
GF3074X	DEMAND REG B DIR	---	2/5		1 = DIRECT				---	
GF3571P	CABIN PRESS	1-9/3-11	---	0	10		2.6	0	10	3.2
GF3572X	REPR ELEC OPEN	---	2/3		1 = OPEN				---	
GF3582P	ASC 1 O_2 PRESS	4-6/2-6	1/7	0	1000	PSIA	1.9	0	100	3.0
GF3583P	ASC 2 O_2 PRESS	4-9/2-10	1/7	0	1000	PSIA	1.9	0	100	3.0
GF3584P	DES O_2 PRESS	1-11/3-13	2/8 2/8	0	3000	PSIA	2.3	0	100	3.2
GF3585T	ASC 1 O_2 TEMP	2-7	---	0	200	DEG F	1.6		---	
GF3586T	ASC 2 O_2 TEMP	2-6	---	0	200	DEG F	1.6		---	
GF3587T	DES O_2 TEMP	3-15	---	0	200	DEG F	1.6		---	
GF3589P	O_2 MANIFOLD PRESS	3-10/1-10		0	1400	PSIA	1.9		---	
GF3591P	U/H RLF PRESS	3-15	---	0	25	PSIA	2.6		---	
GF3592P	F/H RLF PRESS	1-14	---	0	25	PSIA	2.6		---	
GF4101P	PRI H_2O REG ΔP	2-12/4-14	1/18	0	2	PSID	3.1		---	

MEAS ID	MEAS DESCRIPTION	PAM LOCATION PAM NO/SEQ NO	SCERA LOCATION SCERA/LOC	TM DATA RANGE LOW	HIGH	UNITS	RSS ACC PCT	ONBOARD DISPLAY RANGE LOW	HIGH	RSS ACC PCT
GF4511T	PRI W/B H_2O TEMP	3-13/1-13	2/6	20	160	DEG F	2.4	---		
GF4541T	SUIT W/B H_2O TEMP	4-15	2/6	20	160	DEG F	2.4	---		
GF4581Q	DES H_2O QTY	2-8/4-10	1/7	0	100	PCT	2.9	0	100	3.5
GF4582Q	ASC 1 H_2O QTY	2-6/4-8	1/8	0	100	PCT	2.9	0	100	3.5
GF4583Q	ASC 2 H_2O QTY	2-6/4-8	1/8	0	100	PCT	2.9	0	100	3.5
GF9993U	HI CO_2	---	---		---				---	
GF9997U	GLY PUMP PRESS	1-5/3-7	---	0	60	PSIA	2.1	0	80	2.5
GF9998U	GLY TEMP	4-12/2-13	1/10	20	120	DEG F	3.2	0	80	4.5
GF9999U	H_2O SEP RATE	3-7	1/5	500	3600	RPM	2.2		---	
GG0001X	PGNS DATA	---	---		---				---	
GG0117H	POS ALT (LGC)	---	---		---			0	60.5 KFT	
GG0118L	VEL ALT RATE (LGC)	---	---		---			-700	+700 F/S	
GG0119L	VEL FWD (LGC)	---	---		---			-200	+200 F/S	
GG0120L	VEL LAT (LGC)	---	---		---			-200	+200 F/S	
GG1040V	PLS TORQ REF	3-6/1-7	---	85	135	VDC			---	
GG1110V	2.5 VDC TM BIAS	4-7/2-7	---	0	5	VDC			---	
GG1201V	IMU 28 VAC 800	2-11	---	0	31.1	VRMS			---	
GG1331V	IRIG SUSP 3.2 KC	2-5	---	0	31.1	VRMS			---	
GG1513X	IMU STBY	---	---		1 = STBY				---	
GG1523X	LGC OPR	---	---		1 = OPR				---	
GG2001V	X PIPA OUT IN ϕ	2-1/1-2	---	-2.5	+2.5	VRMS			---	
GG2021V	Y PIPA OUT IN ϕ	1-1	---	-2.5	+2.5	VRMS			---	
GG2041V	Z PIPA OUT IN ϕ	3-1/2-2	---	-2.5	+2.5	VRMS			---	
GG2107V	IG SVO ERR IN ϕ	1-1/2-1	---	-3	+3	VRMS			---	
GG2110C	IG TORQ MTR CUR	3-2	---	-0.5	+0.5	AMPS			---	
GG2112V	IG RSVR OUT SIN	3-5	---	-20.25	+20.25	VRMS			---	
GG2113V	IG RSVR OUT COS	3-4	---	-20.25	+20.25	VRMS			---	
GG2121V	IG 1X RSVR SIN X	2-2	---	-5	+5	VRMS			---	
GG2122V	IG RES OUT SIN	---	---		---			0 -90 -180 0	28 VRMS +90 DEG PITCH +180 DEG ROLL 360 DEG YAW	
GG2123V	IG RES OUT COS	---	---		---			0 -90 -180 0	28 VRMS +90 DEG PITCH +180 DEG ROLL 360 DEG YAW	
GG2137V	MG SVO ERR IN ϕ	3-1/2-1	---	-3	+3	VRMS			---	
GG2140C	MG TORQ MTR CUR	3-2	---	-0.5	+0.5	AMP			---	

MEAS ID	MEAS DESCRIPTION	PAM LOCATION PAM NO/SEQ NO	SCERA LOCATION SCERA/LOC	TM DATA RANGE LOW	HIGH	UNITS	RSS ACC PCT	ONBOARD DISPLAY RANGE LOW	HIGH	RSS ACC PCT
GG2142V	MG RSVR OUT SIN	2-3/4-3	---	-20.25	+20.25	VRMS		---		
GG2143V	MG RSVR OUT COS	1-5/1-4	---	-20.25	+20.25	VRMS		---		
GG2151V	MG 1X RSVR SIN X	2-1	---	-5	+5	VRMS		---		
GG2152V	MG RSVR OUT SIN X	---	---	---				0 -90 -180 0	28 VRMS +90 DEG PITCH +180 DEG ROLL 360 DEG YAW	
GG2153V	MG RSVR OUT COS X	---	---	---				0 -90 -180 0	28 VRMS +90 DEG PITCH +180 DEG ROLL 360 DEG YAW	
GG2167V	OG SVO ERR IN ϕ	2-2/1-2	---	-3	+3	VRMS		---		
GG2170C	OG TORQ MTR CUR	3-2	---	-0.9	+0.9	AMP		---		
GG2172V	OG RSVR OUT SIN	3-4	---	-20.25 128	+20.25 242	VRMS COUNTS		---		
GG2173V	OG RSVR OUT COS	1-3/1-8	---	-20.25 128	+20.25 242	VRMS COUNTS		---		
GG2181V	OG 1X RSVR SIN X	2-2	---	-5 -11.1	+5 +11.2	VRMS DEG		---		
GG2182V	OG RSVR OUT SIN	---	---	---				0 -90 -180 0	28 VRMS +90 DEG PITCH +180 DEG ROLL 360 DEG YAW	
GG2183V	OG RSVR OUT COS	---	---	---				0 -90 -180 0	28 VRMS +90 DEG PITCH +180 DEG ROLL 360 DEG YAW	
GG2217V	PITCH ATT ERR (PGNS)	---	---	---				-30	+30 DEG	3.92
GG2219V	PITCH ATT ERR	4-4	---	-5 -20.4	+5 +20.6	VRMS DEG		---		
GG2247V	PITCH ATT ERR (PGNS)	---	---	---				-30	+30 DEG	
GG2249V	YAW ATT ERR	4-5	---	-5 -20.4	+5 +20.5	VRMS DEG		---		
GG2277V	YAW ATT ERR (PGNS)	---	---	---				-30	+30 DEG	
GG2279V	ROLL ATT ERR	2-4	---	-5 -20.4	+5 +20.6	VRMS DEG		---		
GG2300T	PIPA TEMP	1-11/3-14	---	120	140	DEG F		---		
GG2301T	IRIG TEMP	3-12	---	123	143	DEG F		---		
GG3304V	RR SHFT SIN	1-4	---	-21.5	+21.5	VRMS		---		

MEAS ID	MEAS DESCRIPTION	PAM LOCATION PAM NO/SEQ NO	SCERA LOCATION SCERA/LOC	TM DATA RANGE LOW	HIGH	UNITS	RSS ACC PCT	ONBOARD DISPLAY RANGE LOW	HIGH	RSS ACC PCT
GG3305V	RR SHFT COS	3-3	---	-21.5	+21.5	VRMS		---		
GG3324V	RR TRUN SIN	4-3	---	-21.5	+21.5	VRMS		---		
GG3325V	RR TRUN COS	3-3	---	-21.5	+21.5	VRMS		---		
GG6020T	PIPA CAL TEMP	1-10	---	10	150	DEG F		---		
GG9001X	LGC WARNING	---	2/3	1 = WARNING				---		
GG9002X	ISS WARNING	---	2/3	1 = WARNING				---		
GG9003X	PGNS CAUTION	---	2/3	1 = CAUTION				---		
GH1204X	OUT DET	---	2/14	1 = OUT				---		
GH1214X	AUTO ON	---	2/14	1 = ON				---		
GH1217X	AUTO OFF	---	2/14	1 = OFF				---		
GH1230X	APS ARM	---	1/3	1 = ARM				---		
GH1240V	X TRANS CMD	1-3	2/17	-10	+10	VDC		---		
GH1241V	Y TRANS CMD	1-3	2/17	-10	+10	VDC		---		
GH1242V	Z TRANS CMD	1-3	2/17	-10	+10	VDC		---		
GH1247V	YAW ERR CMD	4-4/1-12	2/18	-13	+13	VDC	1.1	---		
GH1248V	PITCH ERR CMD	2-4/1-12	2/18	-13	+13	VDC	1.1	---		
GH1249V	ROLL ERR CMD	2-4/1-13	2/18	-13	+13	VDC	1.1	---		
GH1260X	APS ON	---	2/2	1 = ON				---		
GH1283X	ABORT STAGE CMD	---	2/14	1 = STAGE				---		
GH1286X	ENG FIRE OVERRIDE	---	2/14	1 = ON				---		
GH1301X	DPS ON	---	2/3	1 = ON				---		
GH1311V	MAN THRUST CMD	4-12	1/15	0 -11.3	14.6 VDC +108.2 PCT		1.2	0	100 PCT	2.3
GH1313V	PITCH GDA POS	3-3/1-6	2/9	-15 -2 -5.5	+15 VRMS +2 INCHES +5.5 DEG		1.5	---		
GH1314V	ROLL GDA POS	4-3/1-5	2/9	-15 -2 -5.5	+15 VRMS +2 INCHES +5.5 DEG		1.5	---		
GH1323X	P TRM FAIL RCCA A	---	2/3	1 = FAIL				---		
GH1330X	R TRM FAIL RCCA B	---	2/3	1 = FAIL				---		
GH1331V	AUTO THRUST CMD	4-3/3-15	1/15	0 0	12 VDC 98.2 PCT		5.8	0	100 PCT	6.1
GH1348X	DPS ARM	---	1/3	1 = ARM				---		
GH1401V	RGA SP MTR A-B	---	2/7	---				---		
GH1402V	RGA SP MTR B-C	---	2/7	---				---		
GH1403V	RGA SP MTR C-A	---	2/7	---				---		
GH1405V	RGA PICKOFF EXCIT	---	1/17	---				---		

MEAS ID	MEAS DESCRIPTION	PAM LOCATION PAM NO/SEQ NO	SCERA LOCATION SCERA/LOC	TM DATA RANGE LOW	HIGH	UNITS	RSS ACC PCT	ONBOARD DISPLAY RANGE LOW	HIGH	RSS ACC PCT
GH1406V	+15 VDC SUP	---	2/19	---				---		
GH1407V	-15 VDC SUP	---	2/19	---				---		
GH1408V	4.3 VDC SUP	---	2/8	---				---		
GH1418V	JD B4U OUTPUT	---	1/4	1 = ON				---		
GH1419V	JD A4D OUTPUT	---	1/4	1 = ON				---		
GH1420V	JD B4F OUTPUT	---	1/4	1 = ON				---		
GH1421V	JD A4R OUTPUT	---	1/4	1 = ON				---		
GH1422V	JD A3U OUTPUT	---	1/4	1 = ON				---		
GH1423V	JD B3D OUTPUT	---	1/4	1 = ON				---		
GH1424V	JD B3A OUTPUT	---	1/4	1 = ON				---		
GH1425V	JD A3R OUTPUT	---	1/4	1 = ON				---		
GH1426V	JD B2U OUTPUT	---	1/2	1 = ON				---		
GH1427V	JD A2D OUTPUT	---	1/2	1 = ON				---		
GH1428V	JD A2A OUTPUT	---	1/2	1 = ON				---		
GH1429V	JD B2L OUTPUT	---	1/2	1 = ON				---		
GH1430V	JD A1U OUTPUT	---	1/2	1 = ON				---		
GH1431V	JD B1D OUTPUT	---	1/2	1 = ON				---		
GH1432V	JD A1F OUTPUT	---	1/2	1 = ON				---		
GH1433V	JD B1L OUTPUT	---	1/2	1 = ON				---		
GH1455V	YAW ATT ERR	4-4/3-3/1-6	2/9	-3.5	+3.5	VRMS	2.0	---		
GH1456V	PITCH ATT ERR	4-4/2-4/1-8	2/9	-3.5	+3.5	VRMS	2.0	---		
GH1457V	ROLL ATT ERR	2-4/1-3/1-10	2/10	-3.5	+3.5	VRMS	2.0			
GH1461V	RGA YAW RATE	2-3/3-4	2/10	-3.5 -2.5	+3.5 +25	VRMS DEG/SEC	2.7	---		
GH1462V	RGA PITCH RATE	2-3/3-5	2/10	-3.5 -2.5	+3.5 +25	VRMS DEG/SEC	2.7	---		
GH1463V	RGA ROLL RATE	2-3/3-4	2/10	-3.5 -25	+3.5 +25	VRMS DEG/SEC	2.7			
GH1488V	PRIME -4.7 VDC	---	2/15							
GH1489V	BACKUP -4.7 VDC	---	2/15							
GH1493V	+6 VDC SUPPLY	---	2/19							
GH1494V	-6 VDC SUPPLY	---	2/19	---						
GH1497V	YAW RGA SIG	---	---	---				-25	+25	DEG/SEC
GH1498V	PITCH RGA SIG	---	---	---				-25	+25	DEG/SEC
GH1499V	ROLL RGA SIG	---	---	---				-25	+25	DEG/SEC
GH1603X	MIN DBND (REVERSE LOGIC)	---	1/3	1 = WIDE 0 = NARROW				---		
GH1608X	AUTO MODE	---	2/14	1 = ON				---		
GH1609X	ATT HOLD	---	2/14	1 = HOLD (ON)				---		

MEAS ID	MEAS DESCRIPTION	PAM LOCATION PAM NO/SEQ NO	SCERA LOCATION SCERA/LOC	TM DATA RANGE LOW	HIGH	UNITS	RSS ACC PCT	ONBOARD DISPLAY RANGE LOW	HIGH	RSS ACC PCT
GH1621X	AGS SEL	---	2/3	1 = AGS SEL 0 = PGNS SEL				---		
GH1628X	ROLL PLSD/DIR	---	2/13	1 = ON (IN)				---		
GH1629X	PITCH PLSD/DIR	---	2/13	1 = ON (IN)				---		
GH1630X	YAW PLSD/DIR	---	2/13	1 = ON (IN)				---		
GH1893X	X TRANS OVERRIDE		1/3	1 = OFF				---		
GH1896X	UNBAL CPLS	---	2/14	1 = ON (YES)				---		
GI0001X	AGS DATA	---	---	AGS CMPTR DATA				---		
GI3151V	VOLT SIN ALPHA	---	---	---				---		
GI3152V	VOLT COS ALPHA	---	---	---				---		
GI3153V	VOLT SIN BETA	---	---	---				---		
GI3154V	VOLT COS BETA	---	---	---				---		
GI3155V	VOLT SIN GAM	---	---	---				---		
GI3156V	VOLT COS GAM	---	---	---				---		
GI3166V	VOLT EX (YAW)	---	---	---				---		
GI3167V	VOLT EY (PITCH)	---	---	---				---		
GI3168V	VOLT EZ (ROLL)	---	---	---				---		
GI3203H	POS ALT	---	---	---				---		
GI3204L	VEL ALT RATE	---	---	---				---		
GI3205L	VEL VY (LAT VEL)	---	---	---				-200	+200 FPS	
GI3214V	+28 VDC ASA	---	2/15	---				---		
GI3215V	+12 VDC ASA	---	1/15	---				---		
GI3232X	AEA TST MOD FAIL	---	1/4	---				---		
GI3233F	ASA FREQ	---	1/16	---				---		
GI3301T	ASA TEMP	4-9/2-9	1/10	20	200	DEG F		---		
GI3305X	AGS WARMUP	---	2/2	1 = WARMUP				---		
GI3306X	AGS STBY	---	2/13	1 = STBY				---		
GL0300	FRAME SYNC & ID	---	---	---				---		
GL0302	LBR	---	---	---				---		
GL0400X	PCM OSC FAIL 1		---	1 = FAIL				---		
GL0401V	CAL 85 PCT	3-5/1-4	---	0	5.00	VDC	0.50	---		
GL0402V	CAL 15 PCT	3-5/4-5	---	0	5.00	VDC	0.50	---		
GL0422V	PCM OSC FAIL 2	1-13	---	0	5	VDC		---		
GL0423V	PCM OSC FAIL 3	2-9	---	0	5	VDC		---		
GL0501W	MET	---	---	---	40	DAYS	--	---		
GL4022X	ASC LOW PRESS	---	---	---				---		
GL4023X	HE REG PRESS OUT	---	---	---				---		

MEAS ID	MEAS DESCRIPTION	PAM LOCATION PAM NO/SEQ NO	SCERA LOCATION SCERA/LOC	TM DATA RANGE LOW	HIGH	UNITS	RSS ACC PCT	ONBOARD DISPLAY RANGE LOW	HIGH	RSS ACC PCT
GL4024X	LO DES PROP QUAN	---	---		---					
GL4026X	CES AC PWR FAIL	---	2-2		0 = FAIL				---	
GL4027X	CES DC PWR FAIL	---	2-2		0 = FAIL				---	
GL4028X	ASA PWR/AEA FAIL	---	2-2		0 = FAIL				---	
GL4054X	C&W PWR FAIL	---	2-12		0 = FAIL				---	
GL4069X	MASTER ALARM ON	---	2-2		0 = ON					
GL4221X	DFI CAL ON	---	---		1 = ON				---	
GL4222X	LM/SLA MATED	---	---		1 = MATED				---	
GL9011W	M ELAPSED TIME	---	---		---			0	60 HRS	0.8
GL9012W	EVENT TIME	---	---		---			0	60 MIN	0.8
GL9013A	THR/WEIGHT RATIO	---	---		---			0	6 LNRG	3.3
GM0064T	LAND GEAR TEMP	2/10	2/21	-200	+500	DEG F	1.7		---	
GM5000U	LAND GEAR DEPLOY	---	1/13		1 = DEPLOY				---	
GN7521X	LR RANGE BAD	---	2/2		1 = BAD				---	
GN7523L	LR VXA A VEL	---	---		---			-700	+700	FT/SEC
GN7524L	LR VYA A VEL	---	---		---			-200	+200	FT/SEC
GN7525L	LRV VZA A VEL	---	---		---			-200	+200	FT/SEC
GN7527H	POS LR RNG DATA	---	---		---			0	60.5K	KFT
GN7545E	VEL XMTR PWR OUT	---	---		---			0	5.0 MW	2.0
GN7546E	ALT XMTR PWR OUT	---	---		---			0	5.0 MW	2.0
GN7557X	LR VEL BAD	---	2/2		1 = BAD				---	
GN7563T	LR ANT TEMP	4-14/2-12	1/21	-200	+200	DEG F	1.7	-200	+200	3.0
GN7609H	RR SHFT ANGLE 1X	---	---		---				---	
GN7610	RR SHFT ANG RATE	---	---		---				---	
GN7611H	RR TRUN ANGLE 1X	---	---		---				---	
GN7612R	RR TRUN ANG RATE	---	---		---				---	
GN7613H	RR RANGE	---	---		---				---	
GN7614L	RR RNG RATE	---	---		---			-700	+700	FT/SEC
GN7621X	RR NO TRACK	---	2/2		1 = NO TRACK				---	
GN7642E	RR PWR OUT	---	---		---			0	5.0	MW
GN7644V	RR ATM OUT TRUN	---	---		---			0	5.0	VDC
GN7646V	RR ATM OUT SHAFT	---	---		---			0	5.0	VDC
GN7648V	RR ATM OUT (AGC)	---	---		---			0	5.0	VDC
GN7723T	RR ANT TEMP	4-7/2-7	1/21	-200	+200	DEG F	1.6	-200	+200	5.4
GP0001P	APS HE 1 PRESS	2-12/1-14	1/8	0	4000	PSIA	2.0	0	4000	2.0
GP0002P	APS HE 2 PRESS	2-9/4-11	1/19	0	4000	PSIA	2.0	0	4000	2.0
GP0018P	APS HE REG PRESS	2-8	---	0	300	PSIA	1.9		---	

MEAS ID	MEAS DESCRIPTION	PAM LOCATION PAM NO/SEQ NO	SCERA LOCATION SCERA/LOC	TM DATA RANGE LOW	HIGH	UNITS	RSS ACC PCT	ONBOARD DISPLAY RANGE LOW	HIGH	RSS ACC PCT
GP0025P	APS HE REG PRESS	3-7	1/8	0	300	PSIA	2.0	---		
GP0201T	APS HE 1 TEMP	1-11/3-14	2/21	-200	+200	DEG F	1.7	-200	+200 DEG F	1.7
GP0202T	APS HE 2 TEMP	2-5/4-7	2/21	-200	+200	DEG F	1.7	-200	+200 DEG F	1.7
GP0318X	APS HE 1 CLSD	---	1/12		1 = CLSD			---		
GP0320X	APS HE 2 CLSD	---	1/12		1 = CLSD			---		
GP0501P	F.T. ULLAGE PRESS	---	---		---			0	300 PSIA	2.7
GP0718T	APS FUEL TEMP	3-11	1/9	20	120	DEG F	2.8	40	100 DEG F	5.0
GP0908X	APS FUEL LO	---	2/2		1 = LO			---		
GP1001P	OX T ULLAGE P	---	---		---			0	300 PSIA	2.7
GP1218T	APS OX TEMP	4-13/2-11	1/9	20	120	DEG F	2.8	40	100	5.0
GP1408X	APS OX LO	---	2/2		1 = LO			---		
GP1501P	APS FUEL PRESS	2-8/4-10	1/19	0	250	PSIA	2.2			
GP1503P	APS OX PRESS	4-9/2-10	1/19	0	250	PSIA	2.2			
GP2010P	APS TCP	2-13/3-15	---	0	150	PSIA	2.1	---		
GP2997U GP2998U	APS PROP VLVS Δ POS	---	2/14		1 = MISMATCH			---		
GQ3015P	DPS START TANK P	3-8	---	200	1750	PSIA	1.9	0	1750	1.9
GQ3018P	DPS HE REG PRESS	4-8	1/19	0	300	PSIA	2.0	---		
GQ3025P	DPS HE REG PRESS	4-11	---	0	300	PSIA	1.9	---		
GQ3309X	DPS HE 1 CLSD	---	---		---			---		
GQ3310X	DPS HE 2 OPEN	---	---		---			---		
GQ3435P	DPS HE PRESS	3-6/1-6	---	0	2000	PSIA	1.4	---		
GQ3436P	HE SUPPLY TANK	---	---		---			0	2000	1.5
GQ3501P	ULLAGE FUEL TANK 1	---	---		---			0	300 PSIA	2.7
GQ3603Q	DPS FUEL 1 QTY	4-11/2-9	---	0 (8	95 PCT 25 PCT	1.2 0.7)		SELECTED		
GQ3604Q	DPS FUEL 2 QTY	4-9/2-10	---	0 (8	95 PCT 25 PCT	1.2 0.7)		SELECTED		
GQ3605Q	DPS FUEL QTY SEL	---	---		---			0 8	99 PCT 25 PCT	1.2 0.7
GQ3611P	DPS FUEL PRESS	3-6	---	0	300	PSIA	1.9	---		
GQ3718T	DPS FUEL 1 TEMP	4-6/2-7	1/9	20	120	DEG F	2.8	40	100	5.0
GQ3719T	DPS FUEL 2 TEMP	2-11/4-13	1/9	20	120	DEG F	2.8	40	100	5.0
GQ4001P	OX NO 1 ULLAGE	---	---		---			0	300 PSIA	2.7
GQ4103Q	DPS OX 1 QTY	2-13/4-12	---	0 (8	95 PCT 25 PCT	1.2 0.7)		SELECTED		
GQ4104Q	DP OX 2 QTY	2-11/4-15	---	0 (8	95 PCT 25 PCT	1.2 0.7)		SELECTED		

TABLE 9-III.- TELEMETERED AND DISPLAYED PARAMETERS - CONTINUED

MEAS ID	MEAS DESCRIPTION	PAM LOCATION PAM NO/SEQ NO	SCERA LOCATION SCERA/LOC	TM DATA RANGE LOW	HIGH	UNITS	RSS ACC PCT	ONBOARD DISPLAY RANGE LOW	HIGH	RSS ACC PCT
GQ4105Q	DPS OX QTY SEL	---	---	---				0	99 PCT	1.2
								(8	25 PCT	0.7)
GQ4111P	DPS OX PRESS	3-6	---	0	300	PSIA	1.9			
GQ4218T	DPS OX 1 TEMP	1-5/3-8	1/10	20	120	DEG F	2.8	40	100	5.0
GQ4219T	DPS OX 2 TEMP	1-6/3-8	1/10	20	120	DEG F	2.8	40	100	5.0
GQ4455X	DPS PROP LO	---	2/2	LOW = 1					---	
GQ6510P	DPS TCP	1-8/3-10	---	0	200	PSIA	1.9	0	100 PCT	2.7
GQ6806H	VAR INJ ACT POS	4-1/2-14/4-2	---	.72	4.65	VDC				
				10	102.45	PCT	1.1		---	
GQ7498U GQ7499U	DPS PROP VLVS Δ POS	---	2/14	1 = Δ POSITION MISMATCH					---	
GR1085Q	RCS PROP A QTY	3-14/1-12	---	0	100	PCT	3.0	0	100	3.6
GR1095Q	RCS PROP B QTY	3-13/1-11	---	0	100	PCT	3.0	0	100	3.6
GR1101P	RCS A HE PRESS	2-11/4-14	1/6	0	3500	PSIA	2.0	0	4000	2.60
GR1102P	RCS B HE PRESS	4-12/2-12	1/6	0	3500	PSIA	2.0	0	4000	2.60
GR1201P	RCS A REG PRESS	4-11/3-11	1/6	0	350	PSIA	2.0	0	400	2.60
GR1202P	RCS B REG PRESS	3-13/4-13	1/6	0	350	PSIA	2.0	0	400	2.60
GR2121T	RCS A FUEL TEMP	2-8	2/20	20	120	PSIA	2.8	20	120	3.4
GR2122T	RCS B FUEL TEMP	2-8	2/20	20	120	PSIA	2.8	20	120	3.4
GR2201P	A FUEL MFLD PRESS	3-6/1-1/1-7/4-1	---	0	350	PSIA	1.9	0	400	2.6
GR2202P	B FUEL MFLD PRESS	1-5/3-1/3-8	---	0	350	PSIA	1.9	0	400	2.6
GR3201P	A OX MFLD PRESS	3-7/1-7/2-2	---	0	350	PSIA	1.9	0	400	2.6
GR3202P	B OX MFLD PRESS	1-6/1-2/2-1/3-8	---	0	350	PSIA	1.9	0	400	2.6
GR5031X	RCS TCP B4U	---	1/11	1 = ON					---	
GR5032X	RCS TCP A4D	---	1/11	1 = ON					---	
GR5033X	RCS TCP B4F	---	1/11	1 = ON					---	
GR5034X	RCS TCP A4R	---	1/11	1 = ON					---	
GR5035X	RCS TCP A3U	---	1/11	1 = ON					---	
GR5036X	RCS TCP B3D	---	1/11	1 = ON					---	
GR5037X	RCS TCP B3A	---	1/11	1 = ON					---	
GR5038X	RCS TCP A3R	---	1/11	1 = ON					---	
GR5039X	RCS TCP B2U	---	1/11	1 = ON					---	
GR5040X	RCS TCP A2D	---	1/11	1 = ON					---	
GR5041X	RCS TCP A2A	---	1/3	1 = ON					---	
GR5042X	RCS TCP B2L	---	1/3	1 = ON					---	
GR5043X	RCS TCP A1U	---	1/3	1 = ON					---	
GR5044X	RCS TCP B1D	---	1/3	1 = ON					---	
GR5045X	RCS TCP A1F	---	1/3	1 = ON					---	

MEAS ID	MEAS DESCRIPTION	PAM LOCATION PAM NO/SEQ NO	SCERA LOCATION SCERA/LOC	TM DATA RANGE LOW	HIGH	UNITS	RSS ACC PCT	ONBOARD DISPLAY RANGE LOW	HIGH	RSS ACC PCT
GR5046X	RCS TCP B1L	---	1/3		1 = ON				---	
GR6001T	QUAD 4 TEMP	4-6	1/20	20	200	DEG F	2.2	-100	+200	2.4
GR6002T	QUAD 3 TEMP	4-7	1/20	20	200	DEG F	2.2	-100	+200	2.4
GR6003T	QUAD 2 TEMP	4-10	1/20	20	200	DEG F	2.2	-100	+200	2.4
GR6004T	QUAD 1 TEMP	4-10	1/20	20	200	DEG F	2.2	-100	+200	2.4
GR9609U	RCS MAIN A CLSD	---	1/12 1/12		1 = CLSD				---	
GR9610U	RCS MAIN B CLSD	---	1/12 1/12		1 = CLSD				---	
GR9613U	A/B XFEED OPEN	---	1/13		1 = OPEN				---	
GR9631U	ASC FEED A FU OPN	---	1/13		1 = OPEN				---	
GR9632U	ASC FEED B FU OPN	---	1/13		1 = OPEN				---	
GR9641U	ASC FEED A OX OPN	---	1/12		1 = OPEN				---	
GR9642U	ASC FEED B OX OPN	---	1/12		1 = OPEN				---	
GR9661U	A4 ISO CLSD	---	1/13 1/14		1 = CLSD				---	
GR9662U	B4 ISO CLSD	---	1/13 1/14		1 = CLSD				---	
GR9663U	A3 ISO CLSD	---	1/13 1/14		1 = CLSD				---	
GR9664U	B3 ISO CLSD	---	1/13 1/14		1 = CLSD				---	
GR9665U	A2 ISO CLSD	---	1/13 1/14		1 = CLSD				---	
GR9666U	B2 ISO CLSD	---	1/13 1/14		1 = CLSD				---	
GR9667U	A1 ISO CLSD	---	1/13 1/14		1 = CLSD				---	
GR9668U	B1 ISO CLSD	---	1/13 1/14		1 = CLSD				---	
GT0201E	S-BND PWR AMP PO	1-14	---	0	25	W				
GT0202E	S-BND RFLT PWR	1-13	---	0	25	W				
GT0441X	DCA STATUS	---	---		---				---	
GT0451H	Y POS GIMB OUT	---	---		---			-75	+255	2.0
GT0452H	X POS GIMB OUT	---	---		---			-75	+75 DEG	.91
GT0454T	S-BND ANT TEMP	---	2/21		---			-100	+200 DEG F	
GT0504V	S-BND RCVR AGC	---	---		---			0	5 VDC	2.0
GT0619V	UHF SIG STR	2-5	---	-99	-10	DBM			---	
GT0992B	S-BND ST PH ERR	2-14/2-3	---	-15 -90	+15 +90	DEG KC			---	
GT0993E	S-BND XMTR PO	1-14	---	0.3	1.5	W			---	
GT0994V	S-BND RCVR SIG	4-13/2-13	1/5	0 -140	5 -50	VDC DBM				
GY0050X	ABORT CMD	---	1/2		1 = CMD (ON)				---	
GY0201X	ED RLY A K1-K6	---	1/12 - 1/14		1 = YES				---	
GY0202X	ED RLY B K1-K6	---	1/12 - 1/14		1 = YES				---	

MEAS ID	MEAS DESCRIPTION	PAM LOCATION PAM NO/SEQ NO	SCERA LOCATION SCERA/LOC	TM DATA RANGE LOW	HIGH	UNITS	RSS ACC PCT	ONBOARD DISPLAY RANGE LOW	HIGH	RSS ACC PCT
GY0231X	ED RLY A K7-K15	---	1/14	1 = CLSD				---		
GY0232X	ED RLY B K7-K15	---	1/14	1 = CLSD				---		
GY0703U	SEL ED BAT VOLTS	---	1/7	---				20	40 VDC	2.1

TABLE 9-IV. - SIGNAL CONDITIONING MEASUREMENT ASSIGNMENTS

SCERA 1

SCERA LOCATION AND TYPE	ELEC/COMM	ECS	GNC	PROP	MEASUREMENT FIELD TITLES	C&W	PCM	DISP
LOC-1 GSE CHECKOUT								
LOC-2 SIGNAL ISOLATING DISCRETE BUFFER 504-2			GH1426V		μD B2U OUTPUT	X	X	
			GH1427V		μD A2D OUTPUT	X	X	
			GH1428V		μD A2F OUTPUT	X	X	
			GH1429V		μD B2L OUTPUT	X	X	
			GH1430V		μD A1U OUTPUT	X	X	
			GH1431V		μD B1D OUTPUT	X	X	
			GH1433V		μD B1S OUTPUT	X	X	
			GH1432V		μD A1F OUTPUT	X	X	
	GY0050X				ABORT CMD	X	X	
					OPEN	X	X	
LOC-3 SIGNAL ISOLATING DISCRETE BUFFER 504-2			GH1603X		MIN DBND		X	
			GH1230X		APS ARM		X	
				GR5041X	RCS TCP A2A	X	X	
				GR5042X	RCS TCP B2L	X	X	
				GR5043X	RCS TCP A1U	X	X	
				GR5044X	RCS TCP B1D	X	X	
				GR5045X	RCS TCP A1F	X	X	
				GR5046X	RCS TCP B1L	X	X	
			GH1348X		DPS ARM	X	X	
			GH1893X		X TRANS OVERRIDE		X	
LOC-4 SIGNAL ISOLATING DISCRETE BUFFER 504-2			G13232X		AEA TEST MODE FAIL	X		
					OPEN	X		
			GH1418V		μD B4U OUTPUT	X	X	
			GH1420V		μD B4F OUTPUT	X	X	
			GH1419V		μD A4D OUTPUT	X	X	
			GH1421V		μD A4R OUTPUT	X	X	
			GH1422V		μD A3U OUTPUT	X	X	
			GH1423V		μD B3D OUTPUT	X	X	
			GH1424V		μD B3A OUTPUT	X	X	
			GH1425V		μD A3R OUTPUT	X	X	
LOC-5 SIGNAL ISOLATING ANALOG BUFFER 504-1		GF1301P			SUIT PRESS	X	X	X
		GF1521P			CO_2 PART PRESS	X	X	
		GF9999U			H_2O SEP RATE	X	X	
	GT0994V				S-BND RCVR SIG	X	X	
LOC-6 SIGNAL ISOLATING ANALOG BUFFER 504-1				GR1101P	RCS A HE PRESS	X	X	X
				GR1102P	RCS B HE PRESS	X	X	X
				GR1201P	RCS A REG PRESS	X	X	X
				GR1202P	RCS B REG PRESS	X	X	X
LOC-7 SIGNAL ISOLATING ANALOG BUFFER 504-1		GF3582P			ASC 1 O_2 PRESS	X	X	X
		GF3583P			ASC 2 O_2 PRESS	X	X	X
		GF4581Q			DES H_2O QTY	X	X	X
	GY0703U				SEL ED BAT VOLTS			X
LOC-8 SIGNAL ISOLATING ANALOG BUFFER 504-1		GF4582Q			ASC 1 H_2O QTY	X	X	X
		GF4583Q			ASC 2 H_2O QTY	X	X	X
				GP0025P	APS HE REG PRESS	X	X	
				GP0001P	APS HE 1 PRESS	X	X	X
LOC-9 RESISTANCE TO DC CONVERTER 506-3				GQ3718T	DPS FUEL 1 TEMP		X	X
				GQ3719T	DPS FUEL 2 TEMP		X	X
				GP0218T	APS FUEL TEMP		X	X
				GP1218T	APS OX TEMP		X	X
LOC-10 RESISTANCE TO DC CONVERTER 506-3		GF9998U			GLY TEMP	X	X	X
			G13301T		ASA TEMP		X	
				GQ4218T	DPS OX 1 TEMP		X	X
				GQ4219T	DPS OX 2 TEMP		X	X
LOC 11 SIGNAL ISOLATING DISCRETE BUFFER 504-2				GR5031X	RCS TCP B4U	X	X	
				GR5032X	RCS TCP A4D	X	X	
				GR5033X	RCS TCP B4F	X	X	
				GR5034X	RCS TCP A4R	X	X	
				GR5035X	RCS TCP A3U	X	X	
				GR5036X	RCS TCP B3D	X	X	
				GR5037X	RCS TCP B3A	X	X	
				GR5038X	RCS TCP A3R	X	X	
				GR5039X	RCS TCP B2U	X	X	
				GR5040X	RCS TCP A2D	X	X	

SCERA LOCATION AND TYPE	ELEC/COMM	ECS	GNC	PROP	MEASUREMENT FIELD TITLES	C&W	PCM	DISP
LOC-12 SIGNAL ISOLATING DISCRETE BUFFER 504-4				GR9609U	RCS MAIN A CLSD	X		
				GR9610U	RCS MAIN B CLSD	X		
				GR9641U	ASC FEED A OX OPN		X	X
				GR9642U	ASC FEED B OX OPN		X	X
					OPEN	X		X
				GP0318X	APS HE 1 CLSD		X	X
				GP0320X	APS HE 2 CLSD		X	X
				GR9609U	RCS MAIN A CLSD		X	X
					OPEN	X		X
				GR9610U	RCS MAIN B CLSD		X	X
	GY0201X				ED RLY A K1-K6		X	X
	GY0202X				ED RLY B K1-K6		X	X
LOC-13 SIGNAL ISOLATING DISCRETE BUFFER 504-4				GR9661U	A4 ISO CLSD		X	X
				GR9662U	B4 ISO CLSD		X	X
				GR9663U	A3 ISO CLSD		X	X
				GR9664U	B3 ISO CLSD		X	X
				GR9665U	A2 ISO CLSD		X	X
				GR9666U	B2 ISO CLSD		X	X
				GR9667U	A1 ISO CLSD		X	X
				GR9668U	B1 ISO CLSD		X	X
	GM5000U				LAND GEAR DEPLOY		X	X
				GR9631U	ASC FEED A FU OPN		X	X
				GR9632U	ASC FEED B FU OPN		X	X
				GR9617U	AVR KEEP1 TEMP		X	X
LOC-14 SIGNAL ISOLATING DISCRETE BUFFER 504-5				GR9661U	A4 ISO CLSD	X		
				GR9662U	B4 ISO CLSD	X		
				GR9663U	A3 ISO CLSD	X		
				GR9664U	B3 ISO CLSD	X		
				GR9665U	A2 ISO CLSD	X		
				GR9666U	B2 ISO CLSD	X		
				GR9667U	A1 ISO CLSD	X		
				GR9668U	B1 ISO CLSD	X		
	GY0231X				ED RLY A K7-K15		X	
	GY0232X				ED RLY B K7-K15		X	
	GY0201X				ED RLY A K1-K6	X		
	GY0202X				ED RLY B K1-K6	X		
LOC-15 ATTENUATOR 502-2			GH1331V		AUTO THRUST CMD		X	X
			GH1311V		MAN THRUST CMD		X	X
	GC0301V				CDR BUS VOLT	X		
			G13215V		+12 VDC ASA	X		
LOC-16 FREQ TO DC CONVERTER 505-1	GC0155F				AC BUS FREQ	X		
			G13233F		ASA FREQ	X		
					OPEN		X	
LOC-17 AC TO DC CONVERTER 503-2	GC0071V				AC BUS VOLT	X		
					OPEN		X	
			GH1405V		RGA EXCIT	X		
LOC-18 SIGNAL ISOLATING ANALOG BUFFER 504-1	GC0155F				AC BUS FREQ		X	
	GC0071V				AC BUS VOLT		X	X
	GC0301V				CDR BUS VOLT		X	X
		GF4101P			PRI H_2O REG ΔP		X	
LOC-19 SIGNAL ISOLATING ANALOG BUFFER 504-1				GP0002P	APS HE 2 PRESS	X	X	X
				GQ3018P	DPS HE REG PRESS	X	X	
				GP1501P	APS FUEL PRESS	X	X	
				GP1503P	APS OX PRESS	X	X	
LOC-20 RESISTANCE TO DC CONVERTER 506-3				GR6002T	QUAD 3 TEMP	X	X	X
				GR6003T	QUAD 2 TEMP	X	X	X
				GR6004T	QUAD 1 TEMP	X	X	X
				GR6001T	QUAD 4 TEMP	X	X	X
LOC-21 RESISTANCE TO DC CONVERTER 506-3		GF1281T			SUIT TEMP		X	X
		GF1651T			CABIN TEMP		X	X
			GN7723T		RR ANT TEMP	X	X	X
			GN7563T		LR ANT TEMP	X	X	X
LOC-22 CAPPED								

SCERA 2

SCERA LOCATION AND TYPE	ELEC/COMM	ECS	GNC	PROP	MEASUREMENT FIELD TITLES	C&W	PCM	DISP
LOC-1 GSE CHECKOUT								
LOC-2 SIGNAL ISOLATING DISCRETE BUFFER 504-3	GL4026X				CES AC PWR FAIL		X	
	GL4028X				ASA PWR/AEA FAIL		X	
			GN7521X		LR RANGE BAD	X	X	
			GN7557X		LR VEL BAD	X	X	
			GN7621X		RR NO TRACK	X	X	
				GP0908X	APS FUEL LO	X	X	
				GP1408X	APS OX LO	X	X	
	GL4069X				MASTER ALARM ON		X	
				GQ4455X	DPS PROP LO	X	X	
			GH1260X		APS ON	X	X	
			GI3305X		AGS WARMUP	X	X	
	GL4027X				CES DC PWR FAIL		X	
LOC-3 SIGNAL ISOLATING DISCRETE BUFFER 504-3					OPEN	X	X	
		GF1083X			SUIT FAN 1 MAL	X	X	
		GF2041X			GLY LEVEL LOW	X	X	
			GH1301X		DPS ON	X	X	
			GH1621X		AGS SEL	X	X	
		GF1084X			SUIT FAN 2 MAL	X	X	
					OPEN	X	X	
		GF3572X			REPR ELEC OPEN	X	X	
			GH1323X		P TRM FAIL RCCA A	X	X	
			GH1330X		R TRM FAIL RCCA B	X	X	
			GG9001X		LGC WARNING	X	X	
			GG9002X		ISS WARNING	X	X	
LOC-4 SIGNAL ISOLATING DISCRETE BUFFER 504-4	GC4361X				BAT 1 HI TAP		X	X
	GC4362X				BAT 1 LOW TAP		X	X
	GC4363X				BAT 2 HI TAP		X	X
	GC4364X				BAT 2 LOW TAP		X	X
	GC4365X				BAT 3 HI TAP		X	X
	GC4366X				BAT 3 LOW TAP		X	X
	GC4367X				BAT 4 HI TAP		X	X
	GC4368X				BAT 4 LOW TAP		X	X
	GC4369X				BAT 5 B/U CDR		X	X
	GC4370X				BAT 6 NORM CDR		X	X
	GC4371X				BAT 5 NORM SE		X	X
	GC4372X				BAT 6 B/U SE		X	X
LOC-5 SIGNAL ISOLATING DISCRETE BUFFER 504-5		GF1241X			SEC CO_2 SEL		X	
		GF1221X			SUIT DIV EGRESS		X	
		GF1211X			SUIT RLF CLSD		X	
		GF1212X			SUIT RLF OPEN		X	
		GF3071X			DEMAND REG A CLSD		X	
		GF3072X			DEMAND REG A DIR		X	
		GF3073X			DEMAND REG B CLSD		X	
		GF3074X			DEMAND REG B DIR		X	
		GF1231X			CABIN RET CLSD		X	
		GF1232X			CABIN RET OPEN		X	
		GF1201X			CDR SUIT DISC		X	
		GF1202X			SE SUIT DISC		X	
LOC-6 RESISTANCE TO DC CONVERTER 506-3		GF4541T			SUIT W/B H_2O TEMP		X	
		GF1291T			SUIT 1 T OUT		X	
		GF1292T			SUIT 2 T OUT		X	
		GF4511T			PRI W/B H_2O TEMP		X	
LOC-7 AC TO DC CONVERTER 503-2			GH1401V		RGA SP MTR A-B	X		
			GH1402V		RGA SP MTR B-C	X		
			GH1403V		RGA SP MTR C-A	X		
LOC-8 DC AMPLIFIER 501-1		GF3584P			DES O_2 PRESS	X		
		GF3584P			DES O_2 PRESS		X	X
			GH1408V		4.3 VDC SUP	X		
	GC0302V				LMP BUS VOLT		X	X
LOC-9 PHASE SENSITIVE DEMODULATOR 507-1			GH1313V		PITCH GDA POS		X	
			GH1314V		ROLL GDA POS		X	
			GH1455V		YAW ATT ERROR		X	
			GH1456V		PITCH ATT ERROR		X	
LOC-10 PHASE SENSITIVE DEMODULATOR 507-1			GH1457V		ROLL ATT ERROR		X	
			GH1461V		RGA YAW RATE		X	
			GH1462V		RGA PITCH RATE		X	
			GH1463V		RGA ROLL RATE		X	
LOC-11 CAPPED								

SCERA LOCATION AND TYPE	ELEC/COMM	ECS	GNC	PROP	MEASUREMENT FIELD TITLES	C&W	PCM	DISP
LOC-12 SIGNAL ISOLATING DISCRETE BUFFER 504-4	GL4054X				C&W PWR FAIL		X	
		GF2936X			GLY PUMP SWITCHOVER		X	X
					OPEN		X	X
					OPEN		X	X
					OPEN		X	
					OPEN		X	
	GC9961U				BAT 1 MAL		X	X
	GC9962U				BAT 2 MAL		X	X
	GC9963U				BAT 3 MAL		X	X
	GC9964U				BAT 4 MAL		X	X
	GC9965U				BAT 5 MAL		X	X
	GC9966U				BAT 6 MAL		X	X
LOC-13 SIGNAL ISOLATING DISCRETE BUFFER 504-5			GH1628X		ROLL PLSD/DIR		X	
			GH1629X		PITCH PLSD/DIR		X	
		GF2935X			GLY PUMP FAIL	X		
					OPEN		X	
			GI3306X		AGS STBY		X	
			GH1630X		YAW PLSD/DIR		X	
	GC9961U				BAT 1 MAL	X		
	GC9962U				BAT 2 MAL	X		
	GC9963U				BAT 3 MAL	X		
	GC9964U				BAT 4 MAL	X		
	GC9965U				BAT 5 MAL	X		
	GC9966U				BAT 6 MAL	X		
LOC-14 SIGNAL ISOLATING DISCRETE BUFFER 504-5			GH1283X		ABORT STAGE		X	
			GH1286X		ENG FIRE OVERRIDE		X	
			GH1608X		AUTO MODE		X	
			GH1609X		ATT HOLD		X	
			GH1204X		OUT DET		X	
			GH1214X		AUTO ON		X	
			GH1217X		AUTO OFF		X	
			GH1896X		UNBAL CPLS		X	
				GQ7498U	DPS PROP VLVS ΔPOS		X	
				GQ7499U	DPS PROP VLVS ΔPOS		X	
				GP2997U	APS PROP VLVS ΔPOS		X	
				GP2998U	APS PROP VLVS ΔPOS		X	
LOC-15 ATTENUATOR 502-2			GH1488V		PRI -4.7 VDC	X		
			GH1489V		SEC -4.7 VDC	X		
			GI3214V		+28 VDC ASA	X		
	GC0302V				LMP BUS VOLT	X		
LOC-16 ATTENUATOR 502-2	GC0201V				BAT 1 VOLT		X	X
	GC0202V				BAT 2 VOLT		X	X
	GC0203V				BAT 3 VOLT		X	X
	GC0204V				BAT 4 VOLT		X	X
LOC-17 ATTENUATOR 502-2	GC0205V				BAT 5 VOLT		X	X
			GH1240V		X TRANS CMD		X	
			GH1241V		Y TRANS CMD		X	
			GH1242V		Z TRANS CMD		X	
LOC-18 ATTENUATOR 502-2	GC0206V				BAT 6 VOLT		X	X
			GH1249V		ROLL ERR CMD		X	
			GH1247V		YAW ERR CMD		X	
			GH1248V		PITCH ERR CMD		X	
LOC-19 ATTENUATOR 502-2			GH1406V		+15 VDC SUP	X		
			GH1407V		-15 VDC SUP	X		
			GH1493V		+6 VDC SUP	X		
			GH1494V		-6 VDC SUP	X		
LOC-20 RESISTANCE TO DC CONVERTER 506-3					OPEN		X	X
				GR2121T	RCS A FUEL TEMP		X	X
				GR2122T	RCS B FUEL TEMP		X	X
					OPEN		X	X
LOC-21 RESISTANCE TO DC CONVERTER 506-3	GN0064T				LAND GEAR TEMP		X	
	GT0454T				S-BAND ANT TEMP	X		X
				GP0201T	APS HE 1 TEMP		X	X
				GP0202T	APS HE 2 TEMP		X	X
LOC-22 CAPPED								

TABLE 9- V - TELEMETRY VERSUS PAM AND SEQUENCER GATES

PAM 1						PAM 2						PAM 3						PAM 4					
SEQ	CHANNEL(S)	ELEC/ COMM	ECS	GNC	PROP	SEQ	CHANNEL(S)	ELEC/ COMM	ECS	GNC	PROP	SEQ	CHANNEL(S)	ELEC/ COMM	ECS	GNC	PROP	SEQ	CHANNEL(S)	ELEC/ COMM	ECS	GNC	PROP
1	22A1 (22A4) 12A1 (12A9) 12A8 12A15 51A1	----	INPUT	GG2107 GROUNDED GG2107† GG2101	GR2201† --	1	22A2 (22A5) 12A2 12A9 (12A1) 12A16 (12A3) 51A2 (51A5)			GG2151 GG2107† GG2137† GG2001	GR3202†	1	22A3 12A3 (12A16) 12A10 (12A18) 12A17 51A3 (51A6)	--	--	GG2137 -- GG2137† GG2041	GR2202† --	1	22A4 (22A1) 12A4 (12A12) 12A11 12A18 (12A10) 51A4	---- ---- -- --	INPUT INPUT -- --	GROUNDED GROUNDED -- --	GR2201† ---- ---- -- GQ6806
2	22A5 (22A2) 12A5 12A12 (12A4) 12A19 (12A13) 51A5 (51A2)	----	INPUT	GG2167† GROUNDED GG2167† GG2001†	GR3202† ----	2	22A6 12A6 12A13 (12A19) 12A20 51A6 (51A3)			GG2121 GG2167 GG2181 GG2041†	GR3201†	2	22A7 12A7 12A14 12A21 51A7	---- -- 	INPUT INPUT 	GROUNDED GG2170 GG2140 GG2110 GROUNDED	---- --	2	12A22 51A8	----	INPUT	GROUNDED	---- GQ6806†
3	11A1 11A8 11A18 11A28 11A37 (11A13)			GH1240 GH1241 GH1242 GG2173 GH1457†		3	11A2 11A9 (11A40):::: 11A19 (11A43) 11A29 (11A45) 11A38 (11A34)	GT0992†		::GG2142 ::GH1461 ::GH1462 ::GH1463		3	11A3 11A10 11A20 11A30 11A39 (11A15)	----	----	---- GG3305 GG3325 GH1313 GH1455†	----	3	11A4 11A11 11A21 11A31 11A40 (11A9)::::	----	INPUT	GROUNDED GG3324 GH1331 GH1314 GG2142†	----
4	11A12 11A22 11A32 11A41 (11A26):::	-- ::GL0401†	-- 	GG2143† -- GG3304	-- 	4	11A5 11A13 (11A37) 11A23 11A33 11A42 (11A7)			GH1249 GH1457 GG2279 GH1248 GH1456†		4	11A6 (11A44) 11A14 11A24 11A34 (11A38) 11A43 (11A19)	----	INPUT	GROUNDED ::GG2113 ::GG2172 ::GH1463† ::GH1461†	----	4	11A7 (11A42) 11A15 (11A39) 11A25 11A35 11A44 (11A6)	---	INPUT	GH1456 GH1455 GH1247 GG2219 GROUNDED	----
5	10A3 (10A48) 10A7 10A11 10A15 (10A44):::: 10A19 (10A29)		::GF9997	::GG2143 ::GH1314†	GQ4218 ::GR2202	5	10A1 10A5 10A9 10A13 (10A27) 10A17 (10A46)	GT0619 ::GC0205	::GF1521	::GG1331	::GP0202	5	11A16 11A26 (11A41):::: 11A36 (11A27):::: 11A45 (10A29)	::GL0401 ::GL0402		::GG2112 ::GH1462†		5	11A17 11A27 (11A36):::	GL0402†		GG2249	
6	10A22 10A26 10A30 (10A6) 10A34 (10A56) 10A38 (10A52)			::GH1313† ::GH1455†	::GQ3435† GQ4219 ::GR5202	6	10A20 (10A54) 10A24 (10A50) 10A28 (10A12) 10A32 10A36	::GC0206	::GF4582 ::GF4583 ::GF3582† GF3586			6	10A2 (10A49) 10A6 (10A30) 10A10 10A14 (10A45):::: 10A18			GG1040	::GQ3435 ::GQ4111 ::GR2201 ::GQ3611	6	10A4 (10A47) 10A8 10A12 (10A28) 10A16 (10A43):::: 	---	::GF3582 -- 	---	GQ3718 ::GR6001 --
7	10A41 10A45 (10A14):::: 10A49 (10A2) 10A53 (10A21):::: 10A57	GC0202 GC0204		GG1040†	::GR2201† ::GR3201†	7	10A39 10A43::(10A16):::: 10A47 (10A4) 10A51 (10A23):::: 10A55 (10A31)	---	GF3585 ---	--- ::GG1110† GN7727†	--- GQ3718†	7	10A21 (10A53):::: 10A25 10A29 (10A19) 10A33 10A37	 ---	::GF9999 ::GF9997† --- 	 ---	::GR3201 --- ::GP0025	7	10A23 (10A51):::: 10A27 (10A13) 10A31 (10A55) 10A35			::GG1110 GN7723	::GP0202† ::GR6002
8	10A60 10A64 10A68 (10A102) 10A72 10A76 (10A86)	::GC1205 GC0201		::GH1456† ::GG2173†	 ::GQ6510	8	10A58 (10A88) 10A62 (10A92) 10A66 10A70 10A74		::GF4581		::GP1501 ::GR2121 GP0018 ::GP2122	8	10A40 10A44 (10A15):::: 10A48 (10A3) 10A52 (10A38):::: 10A56 (10A34)				GQ3015 ::GR2202† GQ4218† ::GR3202† GQ4219†	8	10A42 10A46 (10A17) 10A50 (10A24) 10A54 (10A20)		::GF1521† ::GF4583† ::GF4582†		::GQ3018
9	10A79 10A83 (10A98) 10A87 (10A75) 10A91 (10A106) 10A95 (10A63)	GC0203 ::GC1206† ::GC1201 ::GC1203†	::GF3571			9	10A77 (10A104):::: ::10A81 (10AH96):::: 10A85 10A89 (10A65) 10A93 (10A100)	--- GL0423	---	--- ::GI3301†	::GQ3603† --- ::GP0002	9	10A99 (10A99) 10A63 (10A95) 10A67 (10A94) 10A71 10A75 (10A87)	 ::GC1203 ::GC1204 --- ::GC1206	::GF2021 --- ---	 --- ---	 --- ---	9	10A61 (10A105) 10A65 (10A89) 10A69 (10A101):::: 10A73 (10A97)		 ::GF3583	::GI3301	::GP1503 ::GQ3604†
10	10A99 (10A59) 10A103 (10A90) ::10A107 10A111 10A115	---	::GF2021† ::GF3589† ---	--- GG6020 ::GH1457†	--- 	10	10A97 (10A73) 10A101 (10A69):::: 10A105 (10A61) 10A109 10A113	--- ::GM0064	::GF3583† --- ---	 --- ---	::GQ3604 ::GP1503† --- ---	10	10A76 10A82 10A86 (10A76) 10A90 (10A103) 10A94 (10A67)	 --- ::GC0071 ::GC1204†	 --- ::GF3589 ---	 --- ---	 --- ::GQ6510† ---	10	10A80 10A84 10A88 (10A58) 10A92 (10A62)		 ::GF4581†		::GR6003 ::GR6004 ::GP1501†
11	10A119 (10A146):::: 10A123 (10A166) ::10A127 10A131 (10A142) 10A135 (10A170)	----	---- ::GF3584	::GG2300 ----	::GR1095† ---- ::GP0201	11	10A117 (10A148) 10A121 10A125 (10A160) 10A129 (10A144) 10A133 (10A176):::			::GG1201	GQ3719 ::GR1101 ::GP1218 ::GQ4104	11	10A98 (10A83) 10A102 (10A68) 10A106 (10A91) 10A110 10A114	::GC1205† ::GC1201†	::GF3571†		 ::GR1201† ::GP0718	11	10A96 (10A81):::: 10A100 (10A93) 10A104 (10A77):::: 10A108 10A112	---	---	---	--- ::GP0002† ::GQ3603 GQ3025 ::GR1201
12	10A139 10A143 (10A134) 10A147 (10A130) 10A151 (10A162) 10A155	::GC0302	::GF1301†	::GH1247† ::GH1248†	 GR1085†	12	10A137 10A141 (10A168) 10A145 (10A124) 10A149 (10A164):::: 10A153 (10A179)		::GF1291 ::GF4101	 GN7563†	::GR1102† ::GP0001	12	10A118 10A122 (10A167) 10A126 10A130 (10A147) 10A134 (10A143)	::GC1202 ::GC0301 ::GC0302	 ::GF1301	GG2301	 	12	10A116 (10A165):::: 10A120 (10A169) 10A124 (10A145) 10A128 10A132		::GF9998 ::GF1651 ::GH1311		GQ4103† ::GR1102
13	10A159 10A163 (10A154) 10A167 (10A122) 10A171 10A175	GT0202 ::GC1202† ::GL0422	::GF4511†	 ::GH1249†	 	13	10A157 10A161 (10A152) 10A165 (10A116):::: 10A169 (10A120) 10A173 (10A178)	--- ::GT0994†	--- ::GF9998†	--- 	--- ::GQ4103 ::GP2010	13	10A138 10A142 (10A131) 10A146 (10A119):::: 10A150 10A154 (10A163)	 ---	::GF3584† --- ::GF4511	 ---	::GR1202 ::GR1095 ---	13	10A136 10A140 10A144 (10A120) 10A148 (10A117) 10A152 (10A161)	--- GT0994	--- 	--- 	--- ::GR1202† ::GP1218† GQ3719†
14	10A179 (10A153) 10A183 10A187 10A191 10A195	 ::GT0201 --- ::GT0993	::GF3592 ---	 ---	::GP0001† ---	14	10A177 (10A172) ::10A181 10A185 10A189 10A193	--- ::GT0992 ---	::GF1281† --- ---	--- --- ---	--- --- ::GQ6806†	14	10A158 10A162 (10A151):::: 10A166 (10A123) 10A170 (10A135) 10A174	GC0155 ::GC0301†	 	::GG2300†	::GR1085 ::GP0201†	14	10A156 10A160 (10A125) 10A164 (10A149):::: 10A168 (10A141) 10A172 (10A177)	---	--- ::GF4101† ::GF1281	--- ::GN7563	--- ::GR1101†
						15	10A178 (10A173) 10A182 10A186 10A190 10A194	 ---	::GF3587 --- ::GF3591	::GH1331† ---	::GP2010† ---	15	10A176 (10A133):::: 10A180 10A184 10A188 ::10A192	 ---	::GF1292 ::GF4541 -- ----	 -- ----	GQ4104† -- ----

::LBR
:::REDUNDANT HBR

( ) REDUNDANT CHANNEL
† ON CONTINGENCY FORMATS ONLY

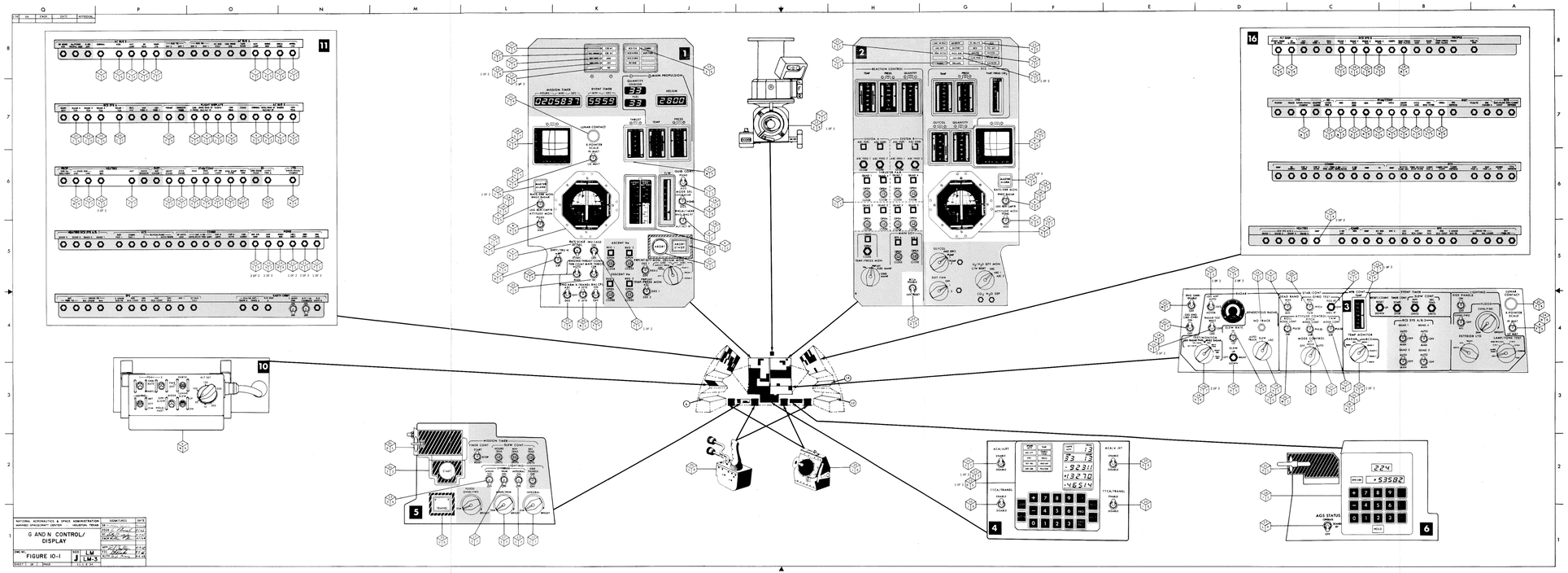

NATIONAL AERONAUTICS & SPACE ADMINISTRATION
MANNED SPACECRAFT CENTER HOUSTON, TEXAS

SIGNATURES	DATE

G AND N CONTROL/ DISPLAY

DWG NO. FIGURE IO-1 | REV | LM J LM-3

SHEET 1 OF 1 SCALE

G AND C LM-3 LSH DRAWING TREE

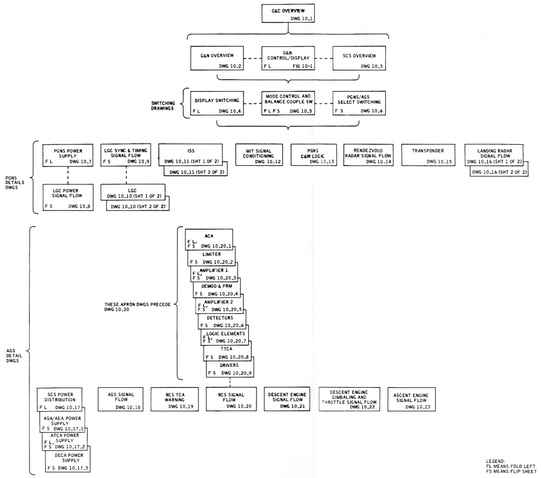

LEGEND:
FL MEANS FOLD LEFT
FS MEANS FLIP SHEET

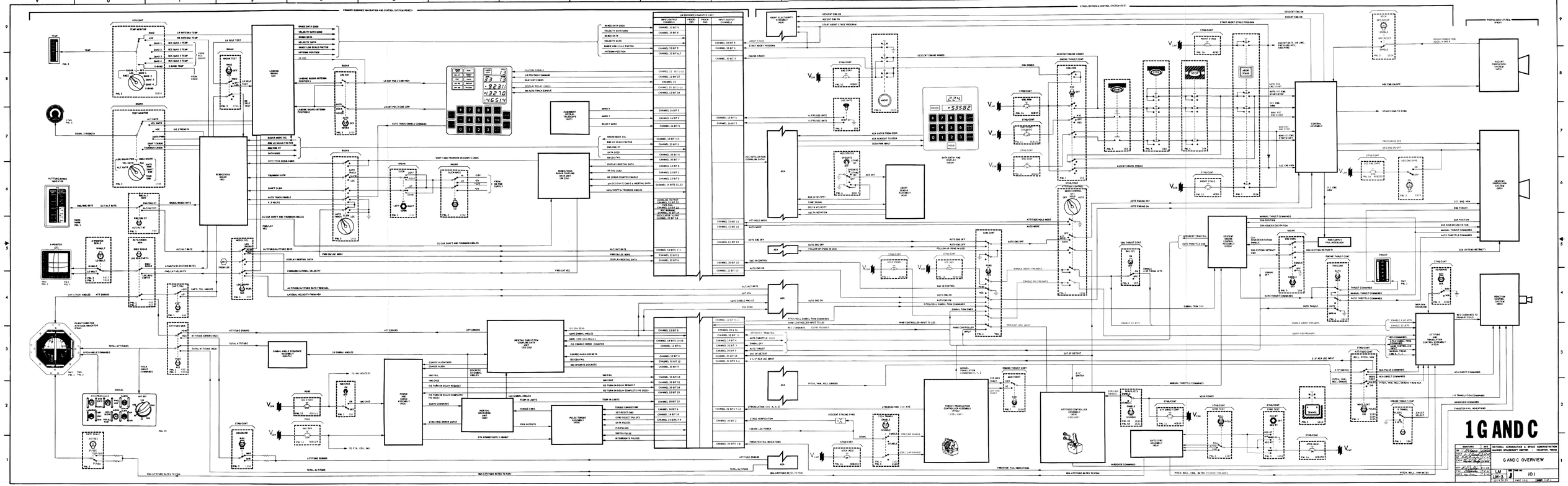
PRIMARY GUIDANCE NAVIGATION AND CONTROL SYSTEM (PGNCS)
STABILIZATION & CONTROL SYSTEM (SCS)
LM GUIDANCE COMPUTER (LGC)
1 G AND C
G AND C OVERVIEW
LM-3
10.1

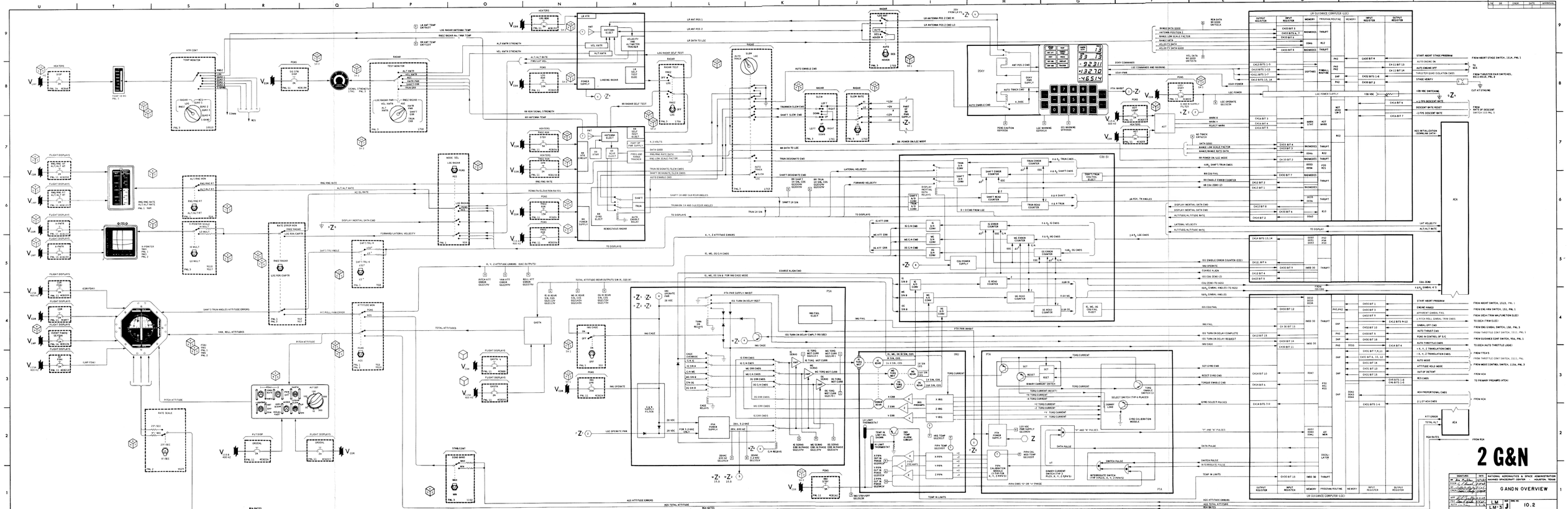
2 G&N
G AND N OVERVIEW
NATIONAL AERONAUTICS & SPACE ADMINISTRATION
MANNED SPACECRAFT CENTER - HOUSTON, TEXAS
LM LM-3J
10.2
LR GUIDANCE COMPUTER (LGC)
LGC POWER SUPPLY
AEA
PSA
IMU
GASTA
ATTITUDE MDA
ATTITUDE ERROR MDA
RATE SCALE
ATT SET
ATT/TRK
ATT DISP
ENG ARM
ENG GMBL
RCS CNTL
ATT DEAD BAND
STAB CONT
RADAR
LR ANT
LR ANT TEMP
LR ANT POS 1
LR ANT POS 2
LR DATA TO LGC
LGC RADAR ANTENNA TEMP
RNDZ RADAR RA / VMA TEMP
RR ANT TEMP
ALT RATE STRENGTH
VEL RATE STRENGTH
ALT RATE
P MILLI VEL
LGC RADAR SELF TEST
RR SIGNAL STRENGTH
RR ANTENNA TEMP
RR RADAR SELF TEST
RR ANTENNA
RR ELEV ELECT
RR AZIMUTH ELECT
RR ELEV ELECT
RR ANTENNA
RR DATA TO LGC
RR POWER ON/LGC MODE
RR DATA
RR ELEV ELECT
RR AZIMUTH ELECT
RR ELEV ELECT
RENDEZVOUS RADAR
AUTO ENABLE CMD
TRUN DESIGNATE/SLEW CMDS
SHAFT DESIGNATE/SLEW CMDS
TRUNNION 1X AND 16X RSVR ANGLES
SHAFT 1X AND 16X RSVR ANGLES
TRUN 1X SIN
SHAFT 1X SIN
TRUN DESIGNATE CMD
SHAFT DESIGNATE CMD
LATERAL VELOCITY
FORWARD VELOCITY
TO DISPLAYS
4.5 VOLTS
DATA GOOD
ENG/ENG RATE DATA
ENG LOW SCALE FACTOR
FAST DF (RR SUPPLY)
FREQ AND TRACKING
RADAR
SLEW
SLEW RATE
LEFT
RIGHT
DOWN
UP
AUTO BACK
AUTO
SLOW
+12V
+5V
-12V
-5V
PART OF RR PWR SUPPLY
ANT POS 2 CMD
ANT POS 1 CMD
AUTO TRACK CMD
4.3VDC
AUTO ENABLE CMD
RADAR DATA GOOD
RANGE DATA
RANGE LOW SCALE FACTOR
RANGE RATE DATA
VEL DATA GOOD
VELOCITY DATA
VELOCITY DATA GOOD
RR ANTENNA POS 2 CMD HI
RR ANTENNA POS 2 CMD LO
RR DATA GOOD
RR DATA
RR ANTENNA POS 2 CMD
RR ANTENNA POS 1 CMD

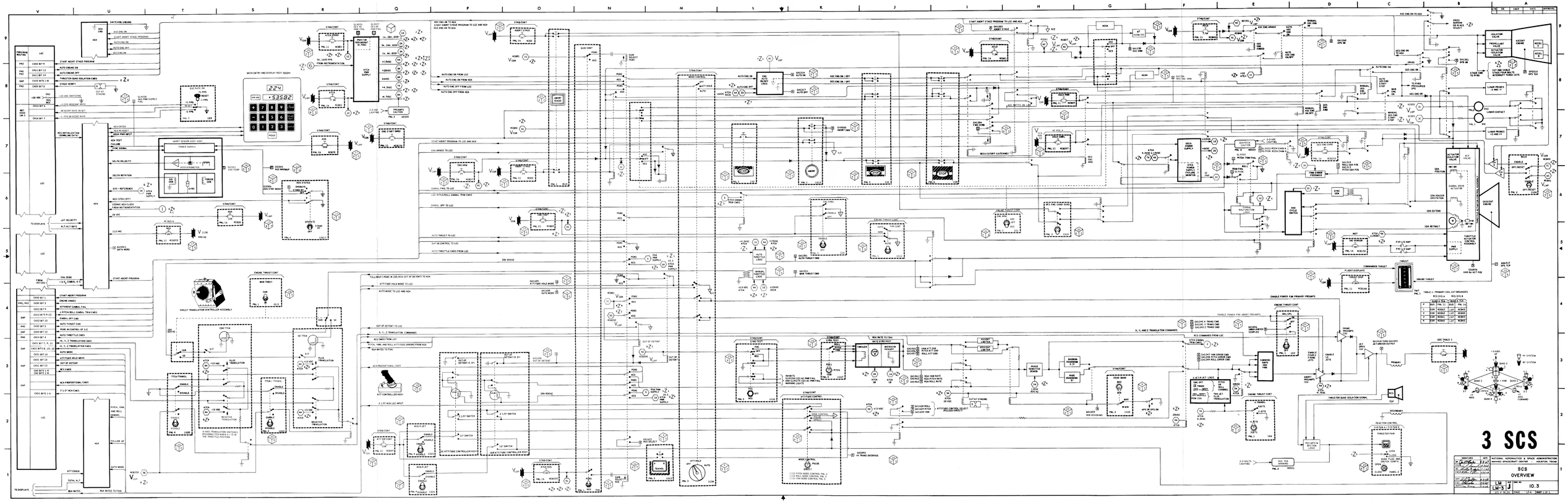
3 SCS
SCS OVERVIEW
NATIONAL AERONAUTICS & SPACE ADMINISTRATION
MANNED SPACECRAFT CENTER - HOUSTON, TEXAS
LM
LM-3
10.3
PROGRAM ROUTING
LGC
AEA
ABORT SENSOR ASSY
DATA ENTRY AND DISPLAY ASSY
ATT CONTROLLER ASSY
THRUST TRANSLATION CONTROLLER ASSEMBLY
ATTITUDE CONTROL
ENGINE THRUST CONT
ENGINE ARMED
ATTITUDE HOLD MODE
AUTO MODE
RCS JETS
ENGINE THRUST
ENGINE ON
ENGINE OFF
ABORT STAGE
DESCENT ENGINE
ASCENT ENGINE
RCS PROPELLANT VALVE
RCS ISOLATION VALVE
RCS ACTUATOR VALVE
ASCENT PROPELLANT VALVE
ASCENT PROPELLANT ISOLATION VALVE
ASCENT PROPELLANT ACTUATOR VALVE
CUT AND CAGE 3 STAGE PUSH TO INTERRUPT THREE CKTS
LUNAR PROBES 12 AND 19
LUNAR CONTACT PROBE
DESCENT ENGINE COMMAND OVERRIDE
ENGINE THRUST
COMMANDED THRUST
FLIGHT DISPLAYS
ENGINE THRUST CONT
ENABLE POWER FOR PRIMARY PREAMPS
ENABLE POWER FOR ABORT PREAMPS
THRUSTER QUAD ISOLATION SIGNAL
DECOMMAND
REACTION CONTROL
THRUSTER PAIR
ATTITUDE CONTROL SELECT
ROLL
PITCH
YAW
ATT HOLD
ATT ERROR
ATT RATES
RCS RATES TO FDAI
TOTAL ATT
TOTAL ATT RATE
ATT RATE
ATT ERROR
RCS TVC
ATT CONTROLLER ASSY
ATT HOLD
ATT ERROR
ATT RATE
TOTAL ATT
RCS RATES TO FDAI

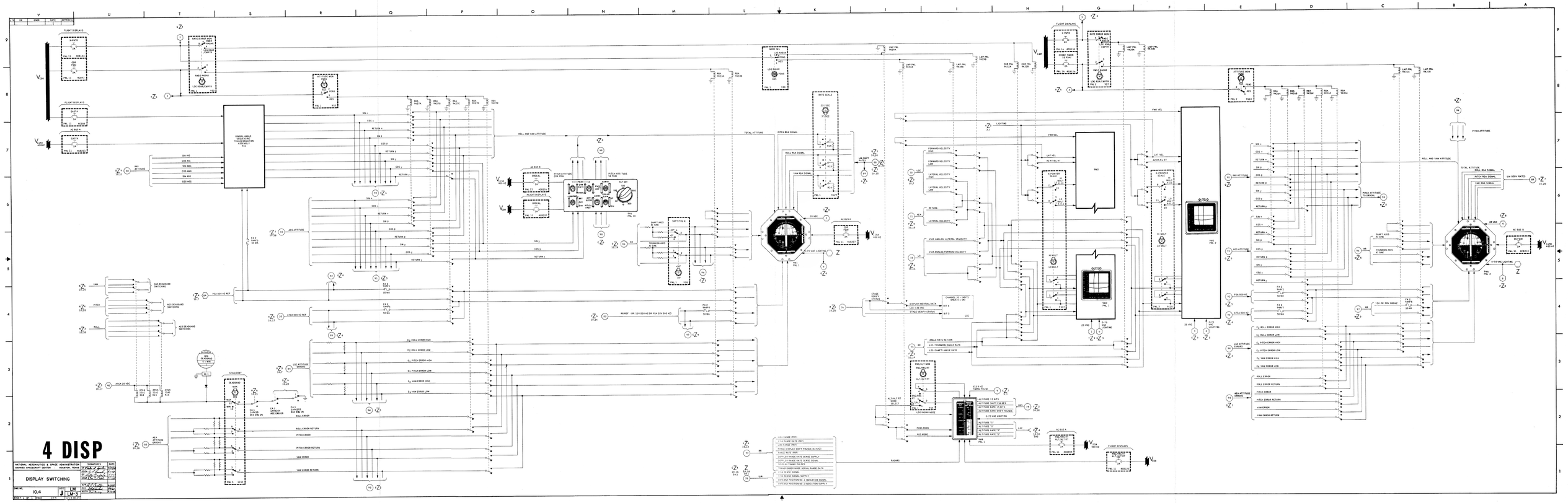
4 DISP
NATIONAL AERONAUTICS & SPACE ADMINISTRATION
MANNED SPACECRAFT CENTER - HOUSTON, TEXAS
DISPLAY SWITCHING
DWG NO. 10.4
SIZE J
LM LM-3
SHEET 1 OF 1
PAGE 10-5
FLIGHT DISPLAYS
GASTA
GASTA
AC BUS A
AC BUS B
ATTITUDE SCALE
ATTITUDE SCALE
SELECT
ROLL
PITCH
YAW
ACS DEADBAND SWITCHING
ACS DEADBAND SWITCHING
ACS DEADBAND SWITCHING
ATCA 115 VAC
ATCA 26 VDC
ATCA 5 VDC
ATCA 15 VDC
ATCA 5 VDC
ATCA 15 VDC
ATCA 5 VDC
ATCA 15

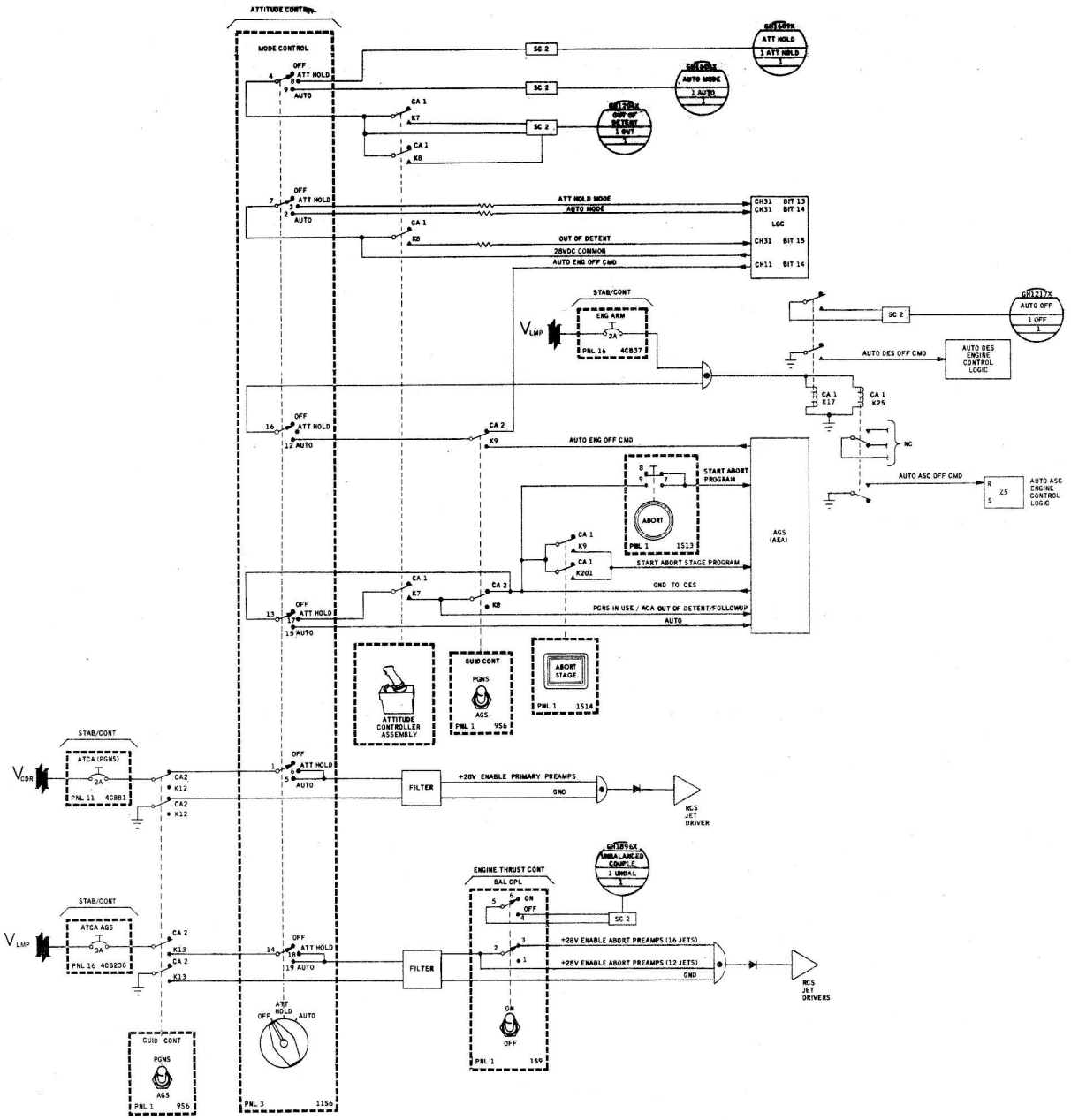

5 MODE

NATIONAL AERONAUTICS & SPACE ADMINISTRATION MANNED SPACECRAFT CENTER · HOUSTON, TEXAS	SIGNATURES	DATE
MODE CONTROL AND BALANCE COUPLE SWITCH	DR	11/1/67
	DSGN	12/1/67
	QC	1/5/68
	ENGR	2/1/68
	APP	4-3-68
DWG NO. 10.5 SIZE LM LM-3	FEC	4/1/68
SHEET 1 OF 1 PAGE 10-6 30 X 40	AUTH	4/8/68

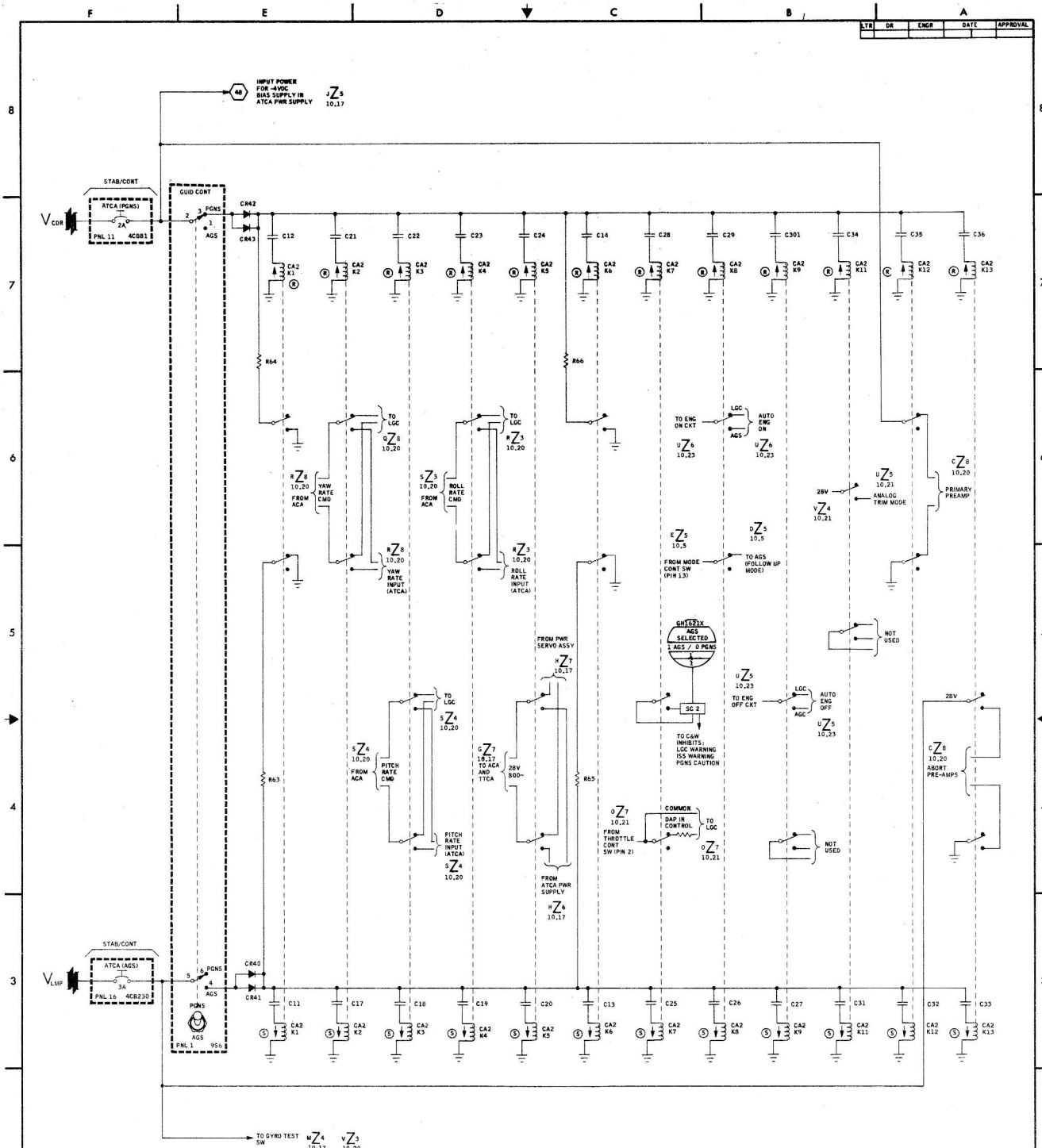

6 PGNS/AGS

SIGNATURES	DATE	NATIONAL AERONAUTICS & SPACE ADMINISTRATION
DR Charles J. Miller	1/7/1947	MANNED SPACECRAFT CENTER · HOUSTON, TEXAS
DSGN L. F. Engel	3/15/48	
QC Scott D. Wolfe	4-4-68	PGNS/AGS SEL SWITCHING
ENGR W. Klein	4/4/68	
APP R. J. Bolton	4-2-68	
FEC [illegible]	4-4-68	LM / LM-3 — SIZE D — DWG NO. 10.6
AUTH Ken Kraft	4-8-68	30 X 40 — PAGE 10-7 — SHEET 1 OF 1

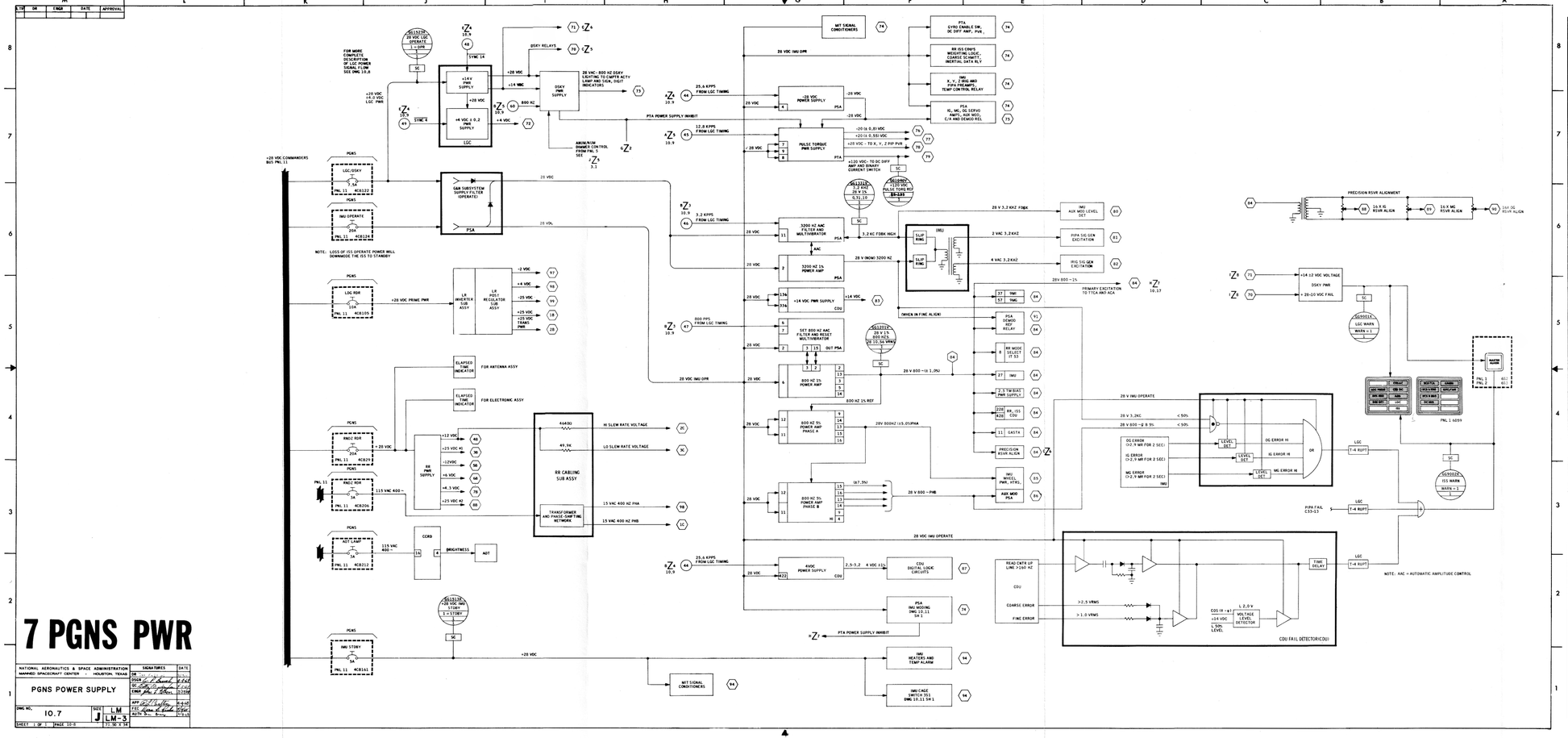
7 PGNS PWR
PGNS POWER SUPPLY
NATIONAL AERONAUTICS & SPACE ADMINISTRATION
MANNED SPACECRAFT CENTER - HOUSTON, TEXAS
DWG NO. 10.7
SIZE J
LM
J LM-3
SHEET 1 OF 1
PAGE 10-8
SIGNATURES
DATE
FOR MORE COMPLETE DESCRIPTION OF LGC POWER SIGNAL FLOW SEE DWG 10.8
+20 VDC +6.0 VDC LGC PWR
+14V PWR SUPPLY
+28 VDC
+4 VDC ± 0.2 PWR SUPPLY
LGC
DSKY RELAYS
DSKY PWR SUPPLY
28 VAC- 800 HZ DSKY LIGHTING, TO CMYK ACTY LIGHT, IMU STBY SGNL, DIGIT INDICATORS
ABUN/NUM DIMMER CONTROL FROM PNL 9 SEE
SYNC 14
SYNC 4
+28 VDC
+14 VDC
800 HZ
+4 VDC
PTA POWER SUPPLY INHIBIT
+20 VDC COMMANDERS BUS PNL 11
PGNS
LGC/DSKY
7.5A
PNL 11 4CB122
IMU OPERATE
20A
PNL 11 4CB124
NOTE: LOSS OF ISS OPERATE POWER WILL DOMINANDE THE ISS TO STANDBY
GSE SUBSYSTEM SUPPLY FILTER (OPERATE)
PSA
28 VDC
LDG RDR
5A
PNL 11 4CB105
+28 VDC PRIME PWR
LR ANTENNA SUB ASSY
LR POST REGULATOR SUB ASSY
-2 VDC
+4 VDC
-25 VDC
+25 VDC TRANS PWR
+25 VDC TRANS PWR
ELAPSED TIME INDICATOR
FOR ANTENNA ASSY
ELAPSED TIME INDICATOR
FOR ELECTRONIC ASSY
KNDZ RDR
5A
PNL 11 4CB129
KNDZ RDR
5A
PNL 11 4CB206
115 VAC 400 ~
RR PWR SUPPLY
+12 VDC
+25 VDC #1
+12VDC
+6 VDC
+4.3 VDC
+25 VDC #2
ADT LAMP
5A
PNL 11 4CB212
115 VAC 400 ~
CCRD
BRIGHTNESS
ADT
IMU STBY
5A
PNL 11 4CB161
+28 VDC
IMU STBY
1 = STBY
SC
MIT SIGNAL CONDITIONERS
44400
49.9K
HI SLEW RATE VOLTAGE
LO SLEW RATE VOLTAGE
RR CABLING SUB ASSY
TRANSFORMER AND PHASE SHIFTING NETWORK
15 VAC 400 HZ PHA
15 VAC 400 HZ PHB
28 VDC IMU OPR
25.6 KPPS FROM LGC TIMING
-28 VDC POWER SUPPLY
PSA
-28 VDC
-20 (± 0.8) VDC
+20 (± 0.55) VDC
PULSE TORQUE PWR SUPPLY
+20 VDC - TO X, Y, Z PIP PVR
+120 VDC- TO DC DIFF AMP AND GIMBAL CURRENT SWITCH
12.8 KPPS FROM LGC TIMING
3.2 KPPS FROM LGC TIMING
3200 HZ AAC FILTER AND MULTIVIBRATOR
3200 HZ 1% POWER AMP
28 V (NOM) 3200 HZ
AAC
+14 VDC PWR SUPPLY
CDU
+14 VDC
800 PPS FROM LGC TIMING
SET 800 HZ AAC FILTER AND RESET MULTIVIBRATOR
OUT PSA
800 HZ 1% POWER AMP
800 HZ 1% REF
28 V 800 ~(± 1.0%)
800 HZ 5% POWER AMP PHASE A
800 HZ 5% POWER AMP PHASE B
(±7.5%)
28V 800HZ (±5.0%)PHA
28 V 800 ~PHB
(WHEN IN FINE ALIGN)
IMU
SLIP RING
SLIP RING
3.2 KC FDBK HIGH
28 V 3.2KHZ FDBK
2 VAC 3.2KHZ
4 VAC 3.2KHZ
28V 800 ~1%
PRIMARY EXCITATION TO TTCA AND ACA
IMU AUX MOD LEVEL DET
PIPA SIG GEN EXCITATION
IRIG SIG GEN EXCITATION
PSA DEMOD RELAY
RR MODE SW 17 53
IMU
2.5 TM BIAT PWR SUPPLY
RR_ISS CDU
GASTA
PRECISION RSVR ALIGN
IMU MISSL PWR, HTRS.
ADP MUX PSA
28 V IMU OPERATE
6VDC POWER SUPPLY
CDU
2.5-3.2 4 VDC ±1%
CDU DIGITAL LOGIC CIRCUITS
PSA IMU MOUNG PWR 4A11
PTA POWER SUPPLY INHIBIT
IMU HEATERS AND TEMP ALARM
IMU CAGE SWITCH 31 DWG 10.11 SW 1
MIT SIGNAL CONDITIONERS
PTA GYRO ENABLE SW, DC DIFF AMP, PVR
RR ISS CDRVS BRIGHTNS LOGIC, COARSE SCHMITT, INERTIAL DATA RLY
IMU X, Y, Z IMU AMO PIPA PRE AMPS TEMP CONTROL RELAY
PSA IG, MG, OG SERVO AMPS, IMU CDU C/A AND DEMOD REL
READ GATE UP LINE 2.560 KC
CDU
COARSE ERROR
FINE ERROR
>2.5 VRMS
>1.0 VRMS
L 2.0 V
COS IR +ø1
+14 VDC
L 50% LEVEL
VOLTAGE LEVEL DETECTOR
FINE DELAY
CDU FAIL DETECTOR(CDU)
PIPA FAIL C33-13
LGC T-4 RUPT
NOTE: AAC = AUTOMATIC AMPLITUDE CONTROL
PRECISION RSVR ALIGNMENT
16 V IG RSVR ALIGN
16 V MG RSVR ALIGN
16K OG RSVR ALIGN
+14 V2 VDC VOLTAGE
DSKY PWR
28-10 VDC FAIL
SG50013
LGC WARN ~1
SG50012
ISS WARN ~1
WARN PWR
PNL 1 401
PNL 2 401
PNL 1 4059
PROJ
ABT MAN
ABT RNG
SUB ABT
ENGR
ABT MAN
ABT RNG
SUB ABT
PROJ
ENGR
REJECTS
ENGR
REJECTS
PGNS
APS
PGNS
APS
ISS
ISS
PGNS
APS
ISS
ISS
PGNS
APS
ISS
IS

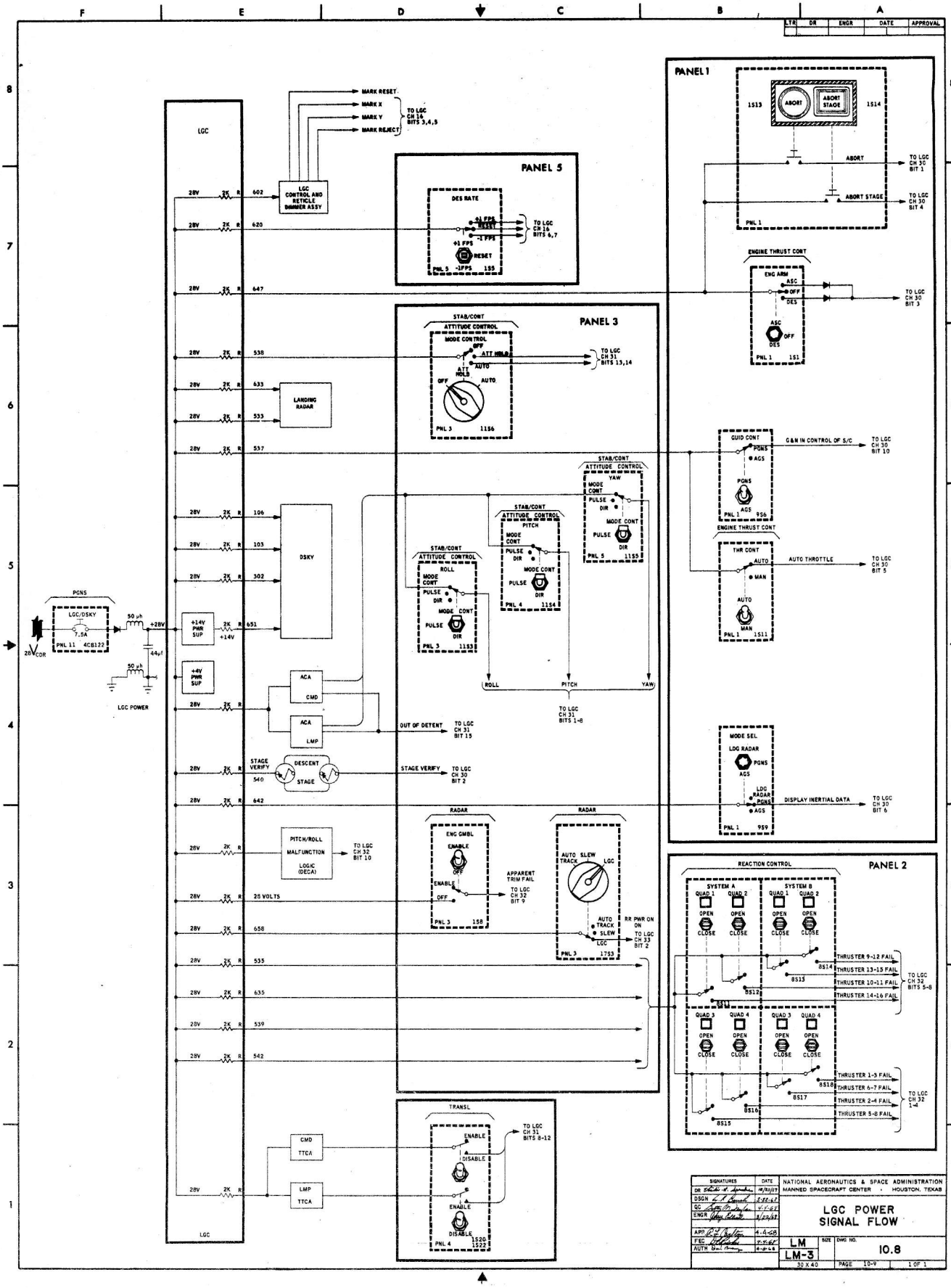
LGC
MARK RESET
MARK X
MARK Y
MARK REJECT
TO LGC CH 16 BITS 3,4,5
LGC CONTROL AND RETICLE DIMMER ASSY
28V 2K R 602
28V 2K R 620
28V 2K R 647
28V 2K R 538
28V 2K R 633
28V 2K R 533
28V 2K R 537
28V 2K R 106
28V 2K R 103
28V 2K R 302
28V 2K R 651
28V 2K R
28V 2K R 642
28V 2K R
28V 2K R 28 VOLTS
28V 2K R 658
28V 2K R 535
28V 2K R 635
28V 2K R 539
28V 2K R 542
28V 2K R
PANEL 5
DES RATE
+1 FPS
RESET
-1 FPS
TO LGC CH 16 BITS 6,7
PNL 5 -1FPS 155
PANEL 3
STAB/CONT
ATTITUDE CONTROL
MODE CONTROL
OFF
ATT HOLD
AUTO
TO LGC CH 31 BITS 13,14
PNL 3 1136
LANDING RADAR
DSKY
PGNS
LGC/DSKY
7.5A
PNL 11 4CB122
28 VDC
50 μh
+28V
44μf
+14V PWR SUP
+14V
+4V PWR SUP
LGC POWER
ACA
CMD
LMP
OUT OF DETENT
TO LGC CH 31 BIT 15
STAGE VERIFY
DESCENT STAGE
TO LGC CH 30 BIT 2
PITCH/ROLL MALFUNCTION LOGIC (DECA)
TO LGC CH 32 BIT 10
RADAR
ENG GMBL
ENABLE
OFF
APPARENT TRIM FAIL
TO LGC CH 32 BIT 9
PNL 3 158
AUTO SLEW TRACK
LGC
AUTO TRACK
SLEW
RR PWR ON ON
TO LGC CH 33 BIT 2
PNL 3 1753
STAB/CONT
ATTITUDE CONTROL
ROLL
PITCH
YAW
MODE CONT
PULSE
DIR
PNL 3 1153
PNL 4 1154
PNL 5 1155
ROLL
PITCH
YAW
TO LGC CH 31 BITS 1-8
TRANSL
ENABLE
DISABLE
TO LGC CH 31 BITS 9-12
CMD
TTCA
LMP
TTCA
PNL 4 1520 1522
PANEL 1
1513
ABORT
ABORT STAGE
1514
ABORT
ABORT STAGE
TO LGC CH 30 BIT 1
TO LGC CH 30 BIT 4
PNL 1
ENGINE THRUST CONT
ENG ARM
ASC
OFF
DES
TO LGC CH 30 BIT 3
PNL 1 1S1
GUID CONT
PGNS
AGS
G&N IN CONTROL OF S/C
TO LGC CH 30 BIT 10
PNL 3 956
ENGINE THRUST CONT
THR CONT
AUTO
MAN
AUTO THROTTLE
TO LGC CH 30 BIT 5
PNL 1 1511
MODE SEL
LDG RADAR
PGNS
AGS
DISPLAY INERTIAL DATA
TO LGC CH 30 BIT 6
PNL 1 959
PANEL 2
REACTION CONTROL
SYSTEM A
SYSTEM B
QUAD 1
QUAD 2
QUAD 3
QUAD 4
OPEN
CLOSE
8S11
8S12
8S13
8S14
8S15
8S16
8S17
8S18
THRUSTER 9-12 FAIL
THRUSTER 13-15 FAIL
THRUSTER 10-11 FAIL
THRUSTER 14-16 FAIL
THRUSTER 1-3 FAIL
THRUSTER 6-7 FAIL
THRUSTER 2-4 FAIL
THRUSTER 5-8 FAIL
TO LGC CH 32 BITS 5-8
TO LGC CH 32 1-4
LTR DR ENGR DATE APPROVAL
SIGNATURES DATE
DR 10/30/67
DSGN 2/22/67
QC 2/22/67
ENGR 2/22/67
APP 4-4-68
FEC 4-4-68
AUTH 4-4-68
NATIONAL AERONAUTICS & SPACE ADMINISTRATION
MANNED SPACECRAFT CENTER · HOUSTON, TEXAS
LGC POWER SIGNAL FLOW
LM
LM-3
SIZE
30 X 40
DWG NO. 10.8
PAGE 10-9 1 OF 1

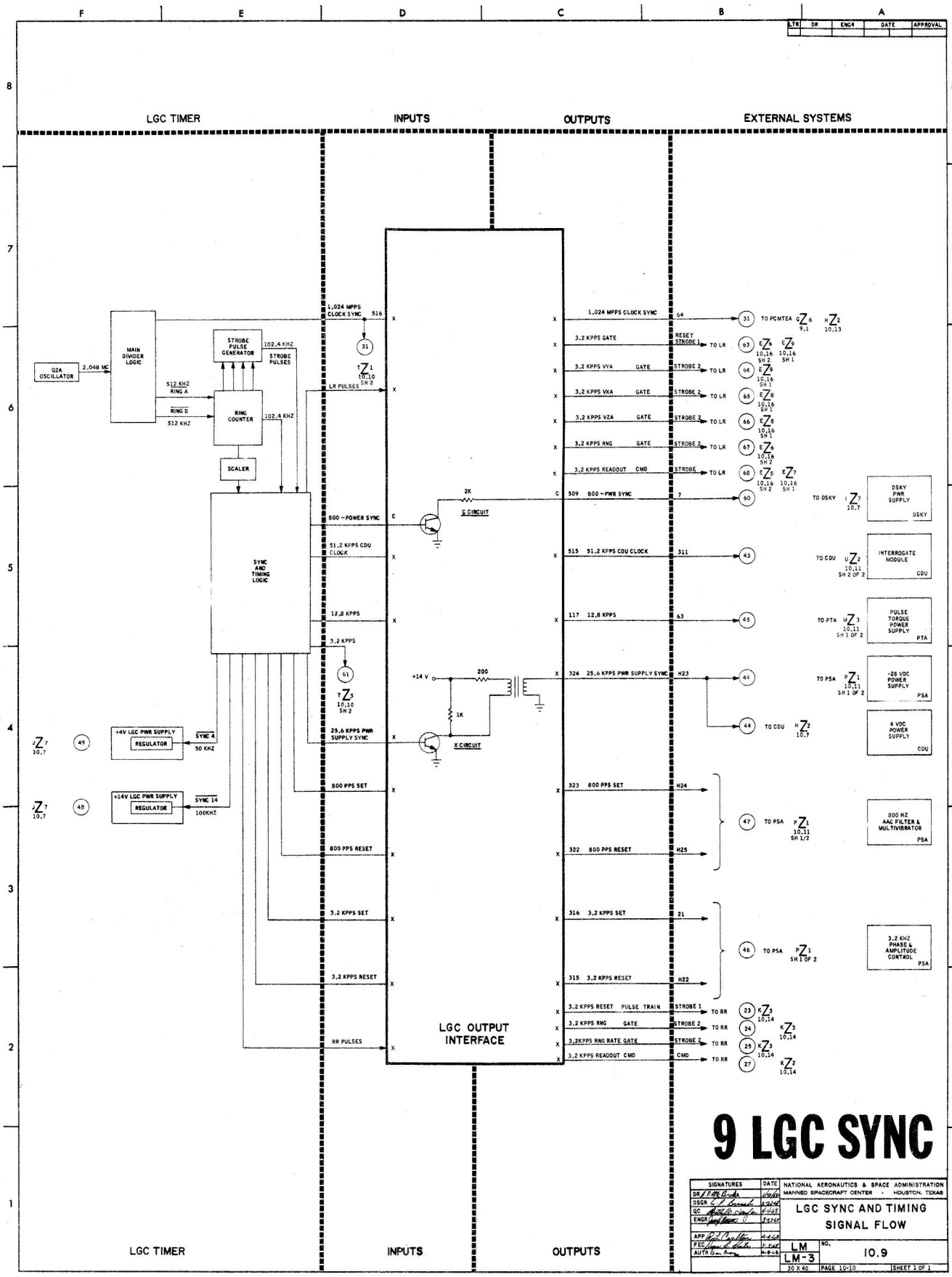

9 LGC SYNC

SIGNATURES	DATE
DR	10/65
DSGN	4-24-67
QC	5-1-67
ENGR	5-1-67
APP	4-4-68
FEC	11-2-67
AUTH	11-8-68

NATIONAL AERONAUTICS & SPACE ADMINISTRATION
MANNED SPACECRAFT CENTER · HOUSTON, TEXAS

LGC SYNC AND TIMING SIGNAL FLOW

LM
LM-3

NO. 10.9

20 X 40 | PAGE 10-10 | SHEET 1 OF 1

10 LGC 1

NO	DR	CHCK	DATE	AUTHORITY

DOWNTUBES	DATE
DR [illegible]	[illegible]
CHK [illegible]	[illegible]
DSGN [illegible]	[illegible]
APPROVED [illegible]	[illegible]

NATIONAL AERONAUTICS & SPACE ADMINISTRATION
MANNED SPACECRAFT CENTER — HOUSTON, TEXAS

LGC INPUT INTERFACE

CONTRACT NO.	DSN/CSN NO.	DWG NO.	REV LTR
NAS 9-153	LM	10	
FSC 34-00	SCALE	SHEET NO.	
ALL DIM IN INCHES	NONE	10.10	
	FSN 80-10-00	10-11	SHEET 1 OF 1

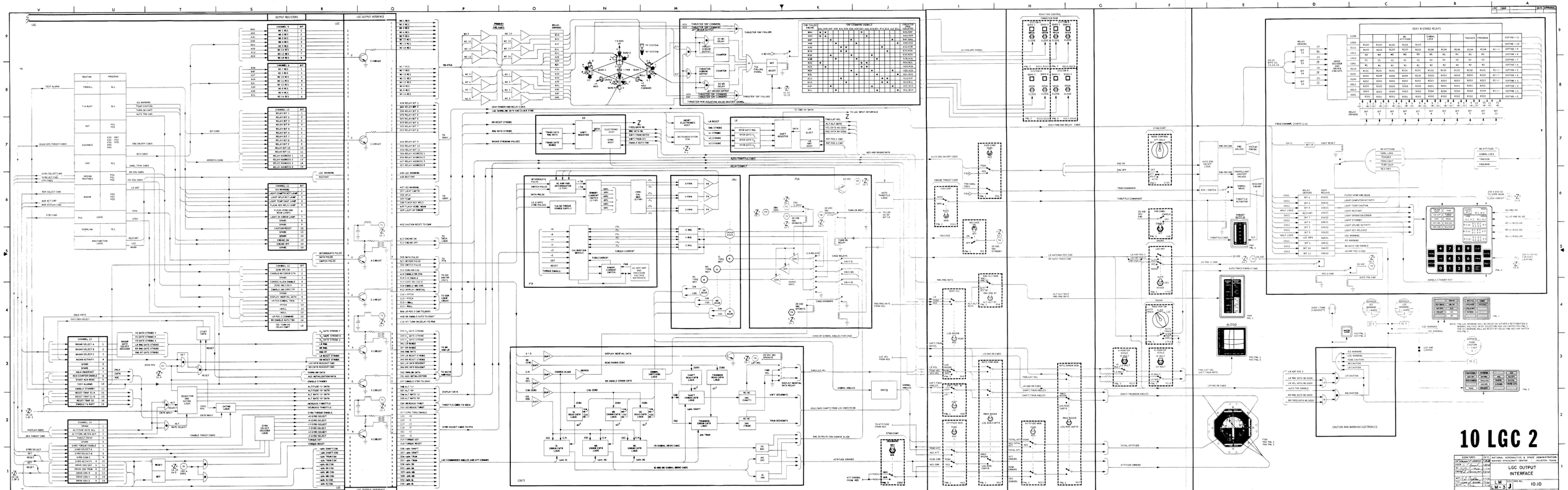
LGC
LGC OUTPUT INTERFACE
OUTPUT REGISTERS
CHANNEL 10
CHANNEL 11
CHANNEL 12
CHANNEL 13
CHANNEL 14
TO ATEA
TO DSKY
TO PTA
TO RR
TO MAIN AMP/SUM
TO GIMBAL DRIVE
TO SCS
TO RCS
TO EMS
TO TELCOM
TO DOWNLINK
TO RADAR
TO IMU
TO OPTICS
TO DAP
TO ENGINE
TO ATTITUDE CONTROLLER ASSEMBLY
TO ENGINE THRUST CONT
TO ENGINE ON/OFF CMDS
TO THROTTLE CONTROL ASSEMBLY
TO ENGINE ON/OFF CMDS
TO ENGINE THRUST CONT
TO ATTITUDE CONTROLLER

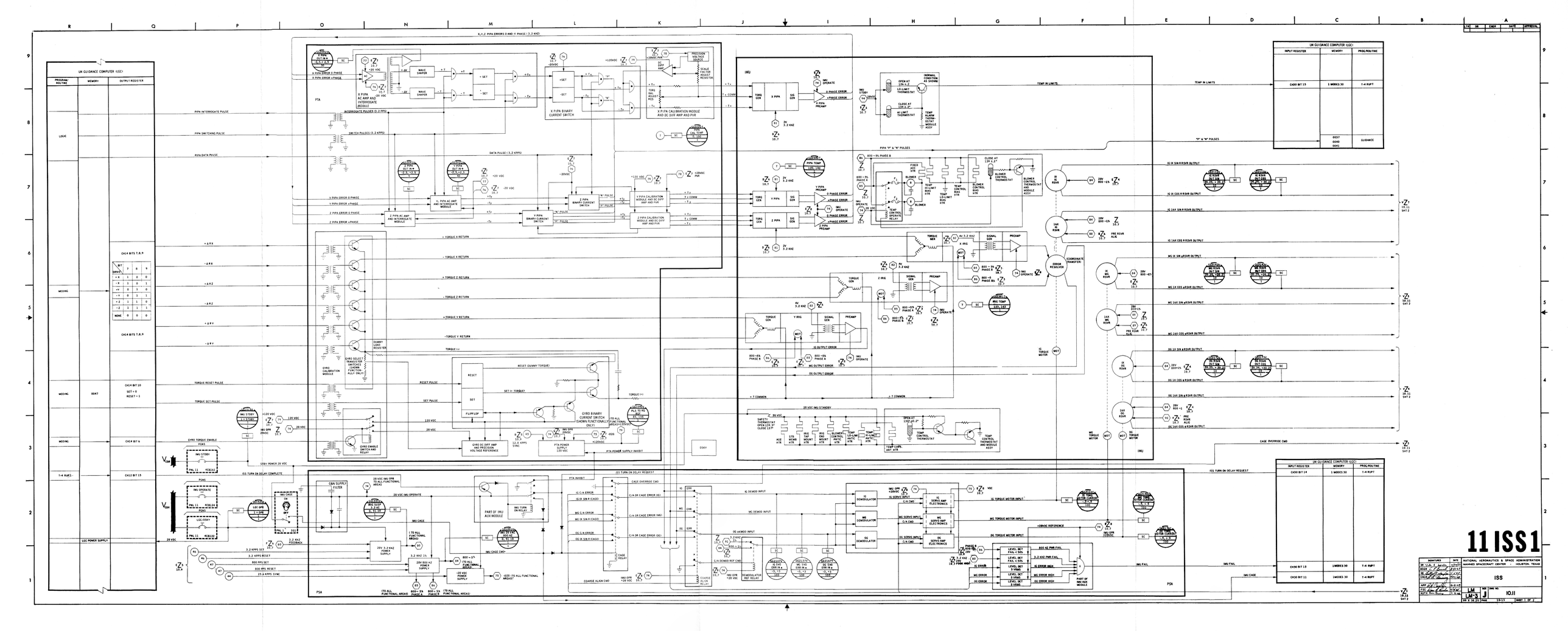
LM GUIDANCE COMPUTER (LGC)
PROGRAM/ ROUTINE
MEMORY
OUTPUT REGISTER
LOGIC
MCOMG
MCOMG
MCOMG
T-4 RUPT
LGC POWER SUPPLY
0047
CH4 BIT 10
SET = 0
RESET = 1
CH4 BIT 6
CH12 BIT 15
CH4 BITS 7,8,9
CH4 BITS 7,8,9
BIT (BRCH)
7
8
9
+X 1 0 0
-X 1 0 1
+Y 0 1 0
-Y 0 1 1
+Z 1 1 0
-Z 1 1 1
NONE 0 0 0
X,Y,Z PIPA ERRORS (1 AND ½ PHASE) (3.2 KHZ)
PIPA INTERROGATE PULSE
PIPA SWITCHING PULSE
PIPA DATA PULSE
INTERROGATE PULSES (3.2 KPPS)
SWITCH PULSES (3.2 KPPS)
DATA PULSE (3.2 KPPS)
X PIPA ERROR Q PHASE
X PIPA ERROR +PHASE
Y PIPA ERROR Q PHASE
Y PIPA ERROR +PHASE
Z PIPA ERROR Q PHASE
Z PIPA ERROR +PHASE
+ TORQUE X RETURN
- TORQUE X RETURN
+ TORQUE Z RETURN
- TORQUE Z RETURN
+ TORQUE Y RETURN
- TORQUE Y RETURN
TORQUE (+)
TORQUE RESET PULSE
TORQUE SET PULSE
RESET (DUMMY TORQUE)
SET (+ TORQUE)
RESET PULSE
SET PULSE
GYRO TORQUE ENABLE PGNS
STBY POWER 28 VDC
ISS TURN ON DELAY COMPLETE
IMU CAGE
3.2 KPPS SET
3.2 KPPS RESET
800 PPS SET
800 PPS RESET
25.6 KPPS SYNC
3.2 KHZ FEEDBACK
28 VDC
IMU
PIPA
IMU OPERATE
IMU CAGE
ON
OFF
PWL 11
PWL 1
PWL 2
PWL 3
PWL 4
PWL 5
PWL 6
PWL 7
PWL 8
PWL 9
PWL 10
PWL 11
PWL 12
PWL 13
PWL 14
PWL 15
PWL 16
PWL 17
PWL 18
PWL 19
PWL 20
PWL

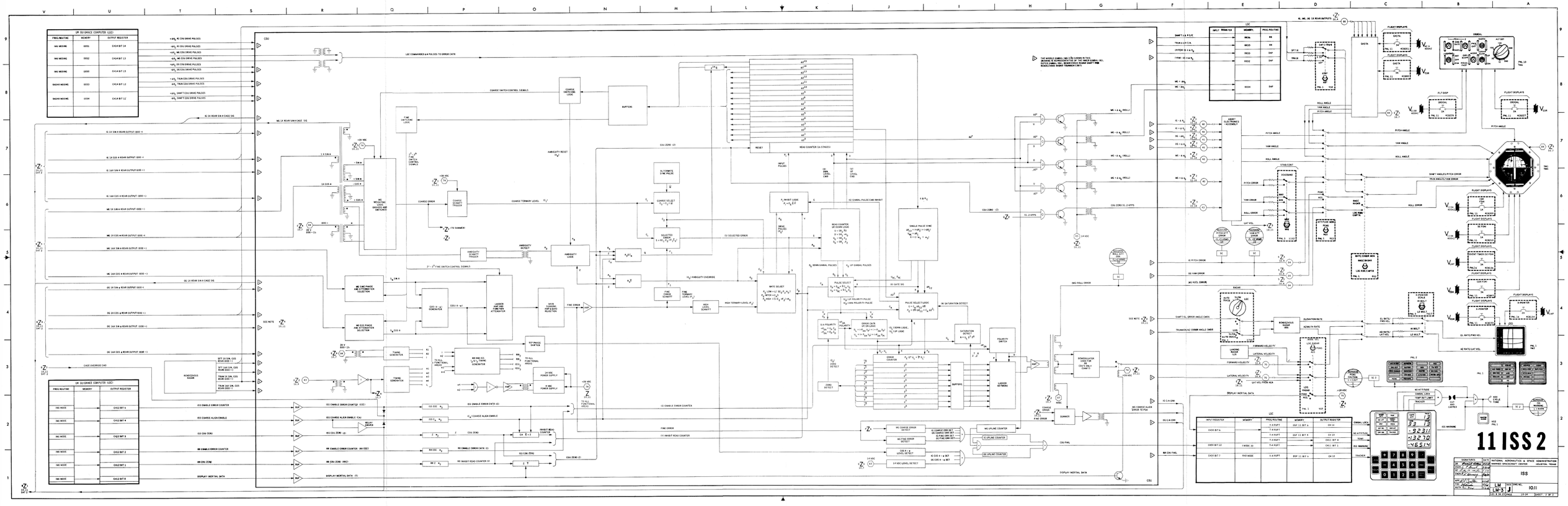
LGC
CDU
IMU
AGC
DSKY
11 ISS 2
ISS
LM-3 J
NATIONAL AERONAUTICS & SPACE ADMINISTRATION
MANNED SPACECRAFT CENTER
HOUSTON, TEXAS

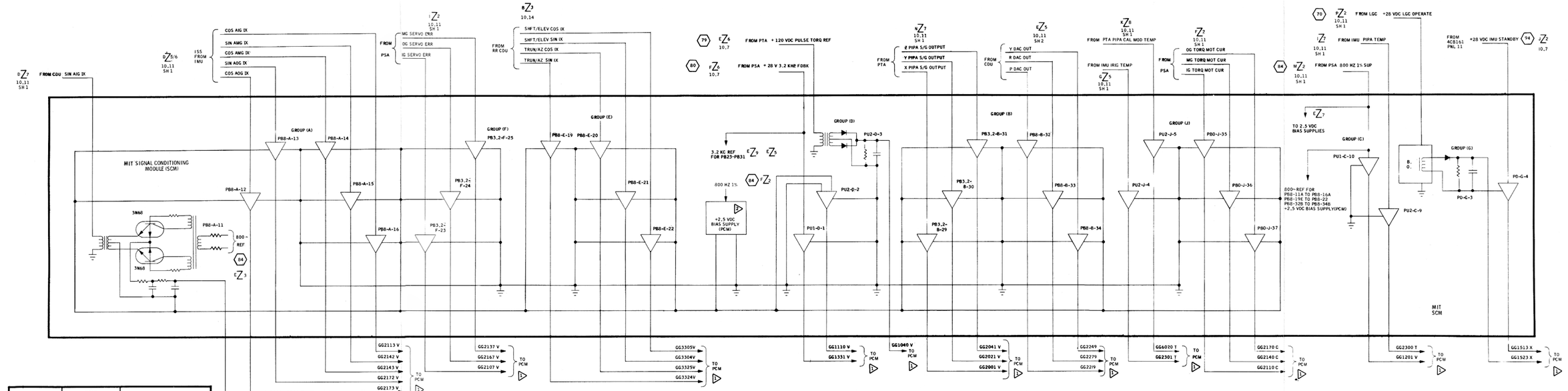

MEAS ID	MEAS DESCRIPTION	SC LOCATION (MIT)*
GG1040 V	PLS TORQ REF	PU2-D-3
GG1110 V	2.5 VDC TM BIAS	PU2-D-2
GG1201 V	IMU 28 VAC 800-	PU1-C-10
GG1331 V	IRIG SUSP 3.2 KH$_Z$	PU1-D-1
GG1513 X	IMU STBY	PD-G-4
GG1523 X	LGC OPR	PD-G-3
GG2001 V	X PIPA OUT IN Q	PB3.2-B-29
GG2021 V	Y PIPA OUT IN Q	PB3.2-B-30
GG2041 V	Z PIPA OUT IN Q	PB3.2-B-31
GG2107 V	IG SVO ERR IN Q	PB3.2-F-23
GG2137 V	MG SVO ERR IN Q	PB3.2-F-25
GG2167 V	OG SVO ERR IN Q	PB3.2-F-24
GG2110 C	IG TORQ MOT CUR	PB0-J-35
GG2140 C	MG TORQ MOT CUR	PB0-J-36
GG2170 C	PG TORQ MOT CUR	PB0-J-37
GG2112 V	IG RSVR OUT SIN	PB8-A-11
GG2113 V	IG RSVR OUT COS	PB8-A-16
GG2142 V	MG RSVR OUT SIN	PB8-A-15
GG2143 V	MG RSVR OUT COS	PB8-A-14
GG2172 V	OG RSVR OUT SIN	PB8-A-13
GG2173 V	OG RSVR OUT COS	PB8-A-12
GG2219 V	P CDU DAC OUT	PB8-B-32
GG2249 V	Y CDU DAC OUT	PB8-B-34
GG2279 V	R CDU DAC OUT	PB8-B-33
GG3304 V	SHFT/ELEV SINX	PB8-E-21
GG3305 V	SHFT/ELEV COS IX	PB8-E-22
GG3324 V	TRUN/AZ SIN IX	PB8-E-19
GG3325 V	TRUN/AZ COS IX	PB8-E-20
GG2300 T	PIPA TEMP	PU2-C-9
GG2301 T	IRIG TEMP	PU2-J-4
GG6020 T	PIPA CAL TEMP	PU2-J-5

* THE FOLLOWING CODE WAS USED FOR IDENTIFYING TYPE AND LOCATION OF SIGNAL CONDITIONER (MIT).

PU2 -D -3 ← IDENTIFYING NUMBER OF S.C.
GROUP LOCATION OF S. C.
TYPE OF SIGNAL CONDITIONER (SEE TABLE 6-1, SUPPLEMENT 1).

SPACECRAFT INSTRUMENTATION FOR GNC

ANALOG SUBASSEMBLIES

MIT SIGNAL CONDITIONING

SUB ASSY	FUNCTION	INPUTS	CHANNEL AVAILABILITY	REMARKS
PB0	ATTENUATOR	-28 VDC TO +28 VDC	1 SINGLE CH	PROVIDES ISOLATION AND ATTENUATES INPUT SIGNAL TO A ZERO TO +5.0 VDC OUTPUT USING A +2.5 VDC BIAS.
PB8	PHASE DEMODULATOR	-20.25 TO +20.25 VRMS	1 SINGLE CH	COMPARES INPUT PHASE WITH A 800 HZ 1 PERCENT REFERENCE SIGNAL AND PRODUCES A 0-5 VDC OUTPUT AS COMPARED TO THE REFERENCE USING A +2.5 VDC BIAS.
PB 3.2	PHASE DEMODULATOR	-2.5 TO +2.5 VRMS -3.0 TO +3.0 VRMS	1 SINGLE CH	COMPARES INPUT PHASE WITH A 3.2 KHZ 1 PERCENT REFERENCE SIGNAL AND PRODUCES A 0-5 VDC OUTPUT AS COMPARED TO THE REFERENCE USING A +2.5 VDC BIAS
PD	DISCRETE BUFFER	DISCRETE SWITCH CLOSURE	1 SINGLE CH	OUTPUT IS A STEP VOLTAGE BETWEEN 4 AND 6 VOLTS FOR "ON" AND 0 +.5 FOR "OFF".
PU1	AC TO DC CONVERTOR	0 TO 28 V 800 0 TO 28 V 3.2 KHZ	1 SINGLE CH	PROVIDES OUTPUT SCALE OF 0-5 VDC.
PU2	ANALOG BUFFER	0 - 5 VDC 0 - 120 VDC	1 SINGLE CH	PROVIDES A 0 TO 5.0 VDC SCALE WITH +2.5 VDC AS A NOMINAL READING.

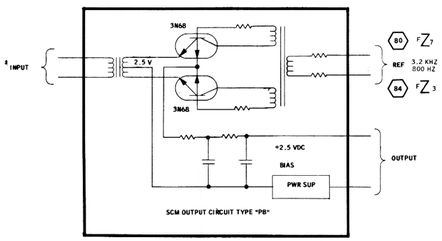

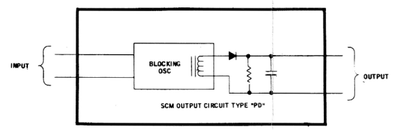

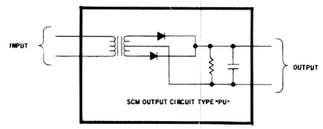

NOTES

+2.5 VDC BIAS FOR "PB" CIRCUITS ONLY

SEE DRAWING 9.11 INSTRUMENTATION

12 MIT

SIGNATURES	DATE
OR GP MAL IFF	7 JAN 69
DSGN G. T. Russell	3 JAN 69
QC Ralph E. Parker	9 JAN 69
ENGR W. H. Tenney	1/10/69
APP Neil J. Hutton	1-14-69
FE Edward K. Parker	1-14-69
AUTH Don Puddy	1-14-69

NATIONAL AERONAUTICS & SPACE ADMINISTRATION
MANNED SPACECRAFT CENTER - HOUSTON, TEXAS

MIT SIGNAL CONDITIONING PGNS

LM LM-3 | SIZE J | DWG NO. 10.12 | 66 X 34 | PAGE 10-15 | SHEET 1 OF 1

LTR	DR	ENGR	DATE	APPROVAL

13 PGNS C&W

INERTIAL SUBSYSTEM

IMU TEMP ALARM AMPLIFIER

134±.2°F HI
126±.2°F LO

+28 V IMU STANDBY

NO PIP PULSES FOR 312.5 ± SEC
BOTH + AND − PULSES FOR 312.5 ± SEC
NO + AND − PULSES 1.28 TO 3.84 SEC

COARSE ERROR
SIN(θ − φ)
>30° OR >2.5 VRMS

FINE ERROR
SIN(θ − φ)
>.7° OR >1 VRMS

NOT IN CDU ZERO MODE

ISS CDU FAIL
(CH30-12)

UP LINE
(READ CNTR OSC
FREQ < 250 CPS)

COS(θ − φ) > 30°
< 3.5 V

+14 VDC ± 4 VDC

IG SERVO ERROR >2.9 MR FOR 2 SECS
MG SERVO ERROR >2.9 MR FOR 2 SECS
OG SERVO ERROR >2.9 MR FOR 2 SECS
(GG13331V) 3200 CPS 1% < 14V
WHEEL SUPPLY 800 CPS 5% < 14V

OUT OF COARSE ALIGN FOR >5 SEC

IMU FAIL (CH30-13)

ISS

RENDEZVOUS RADAR

+14 VDC ± 4 VDC

COARSE ERROR
>2.5V

FINE ERROR
>1V

COS(θ − φ) > 30°
< 3.5 V

UP LINE
(READ COUNTER
OSC FREQ < 250 CPS)

RANGE TRACKER ACQ

FREQ TRACKER ACQ

RR DATA NO GOOD
(CH33-4)

RR CDU FAIL (CH30-07)

RR

LANDING RADAR

BEAM 1 ACQ
BEAM 2 ACQ
ALT ACQ

RNG DATA NO GOOD
(GN 7521)

BEAM 1 ACQ
BEAM 2 ACQ
BEAM 3 ACQ
ALT ACQ

VEL DATA NO GOOD
(GN7557)

(CH33-7) ANT POSITION 2

LR

RR TRACK ENABLE CH12-14

LR ENABLE

CWEA

LGC

COARSE ALIGN

T4 RUPT

LGC CDU Z(M) REGISTER > 70° VIA T4 RUPT

GIMBAL LOCK WARN

CH10-COM

I MODES 33-1 (LIGHT TEST)
CH30-15 (TEMP IN LIMITS)

< 126°F OR > 134°F

CH11-04 TEMP CAUTION

PIPA COUNTS

THRUSTING (LGC CONTROL)

PIPA FAIL DETECT

I MODES 30-5 INHIBIT (CAGE OR TURNOVR)
PIPA FAIL (CH33-13)

PROG CAUTION

CH10-COM

PIPA FAIL

PIPA FAIL (THRUSTING)

I MODES 30-1 INHIBIT

ISS CDU FAIL

I MODES 3083 INHIBIT

IMU FAIL

I MODES 3084 INHIBIT

CH11-01 ISS FAILURE

RR OPERATE

RR ZERO

CH30-07

RR TRK ENABLE

CH33-04

CH10-COM

CH33-05

CH33-08

CH33-07

LR ENABLE

T4 RUPT ROUTINE

SCAFAL (STG 17)
TIMING SIGNALS
+14 VDC (B+)
+4 VDC
(FROM ALARM P S) + 5 VDC

SCALER ALARM CIRCUIT

LOSS OF STAGE 17 PULSES (1.28 SEC PERIOD)

SCA DBL (100 PPS)
TIMING SIGNALS
+14 VDC (B+)
+4 VDC
+5 VDC

DOUBLE FREQ SCALER ALARM CIRCUIT

SCALER INPUT > 200 PPS

ALARM TEST
CNTR FAIL

SEE NOTE 6.

WARNING FILTER AND INTEGRATOR CIRCUIT

SCAFAL

LGC FAIL (CH33-14)

PRI PWR FAIL

+28 VDC < −22.6 V
+14 VDC > 16 V, < 12.5 V
+4 VDC > 4.4 V, < 3.65 V
TIMING SIGNALS
(FOSA AND FOSB)

VOLTAGE ALARM CIRCUIT

(P06) STANDBY

VOLTAGE FAIL

FRESH START

PARITY FAIL
RUPT LOCK
TC TRAP
NIGHT WATCHMAN

LOGIC ALARM CIRCUIT (HARDWARE)

0-12 μ SEC TIME DELAY

ALARM GATE

PRIORITY CONTROL

RESTART

STANDBY

GOJAM (RESTART)

1.024 MHZ (OSC FAIL)
(RESET) CLEAR CH33
+14 VDC (B+)
+14 VDC (B+ SW)
+4 VDC < 2V
0 VDC

OSCILLATOR ALARM CIRCUIT

FRESH START (CH33-15)
OSC FAIL

RNDZ RDR CAUTION

LDG RDR CAUTION

DSKY

NO ATT (DSPTAB 11 BIT 4)

GIMBAL LOCK WARN (DSPTAB 11 BIT 6)

TEMP (CH-04)

PROG CAUT PLUS ERROR CODE (DSPTAB 11 B 1)

STANDBY (P06)

RESTART

TRACKER (DSPTAB 11 BIT 8)

K17 D5
K21 D2
K21 D5
K18 D3
K21 D4
K21 D3
K18 D5
K21 D4

D1171

CUT AND CAPPED

DSKY

GG9003X
PGNS CAUT
CAUT = 1
1.5Ω

SC 2

ISS WARN
LGC WARN

GG9001X
LGC WARN
WARN = 1
1.5Ω

GG9002X
ISS WARN
WARN = 1
1.5Ω

D1171

RNDZ RDR CAUTION
LDG RDR CAUTION
PGNS CAUTION

CWEA

LGC WARN
ISS WARN

PUSH TO RESET

PNL 2 653

PUSH TO RESET

PNL 1 652

PNL 2

OR

AND

PNL 1

COMMANDER

LM PILOT

HEAD SETS (3000 CPS TONE)

6 NO OUTPUT IF INPUT PULSES OCCUR AT A FREQUENCY < 0.9 PPS; OUTPUT REMAINS ON IF PULSES OCCUR AT FREQ > 0.6 PPS OR MORE, ~6 CONSECUTIVE STRETCHED PULSES (160 MILLISEC DELAY PERIOD) CAUSE LGC WARN TO TURN ON FOR 5 SECS

5 THE LDG RDR CAUTION LIGHT IS EXTINGUISHED WHEN A "DATA GOOD" CONDITION IS RESTORED, OR IF THE LANDING RADAR IS TURNED OFF

4 THE RENDEZVOUS CAUTION LIGHT IS EXTINGUISHED WHEN A "DATA GOOD" CONDITION IS RESTORED, OR IF THE RENDEZVOUS RADAR IS TURNED OFF. THIS SIGNAL IS ENABLED ONLY IF THE RENDEZVOUS RADAR MODE SWITCH (1753) IS IN THE AUTO TRACK POSITION

3 LGC, ISS, AND PGNS INDICATOR LIGHTS ARE EXTINGUISHED BY PLACING GUIDANCE CONTROL SWITCH (956) TO AGS POSITION

2 IN THE EVENT OF A PROGRAM ALARM, AN APPROPRIATE ERROR CODE WILL BE DISPLAYED IN THE DSKY DATA REGISTERS

NOTES:

1 ALL LGC ALARMS ARE INHIBITED DURING THE STANDBY MODE WITH THE EXCEPTIONS OF LGC WARNING. LGC WARNING, DURING STANDBY, CAN BE CAUSED BY VOLTAGE FAIL OR SCALER FAIL

SIGNATURES	DATE
DR	
DSGN	2-26-68
QC	2-26-68
ENGR	2-26-68
APP	4-4-68
FEC	4-4-68
AUTH	4-4-68

NATIONAL AERONAUTICS & SPACE ADMINISTRATION
MANNED SPACECRAFT CENTER · HOUSTON, TEXAS

PGNS C AND W LOGIC

LM LM-3 | SIZE J | DWG NO. 10.13

71.50 X 34 | PAGE 10-16 | SHEET 1 OF 1

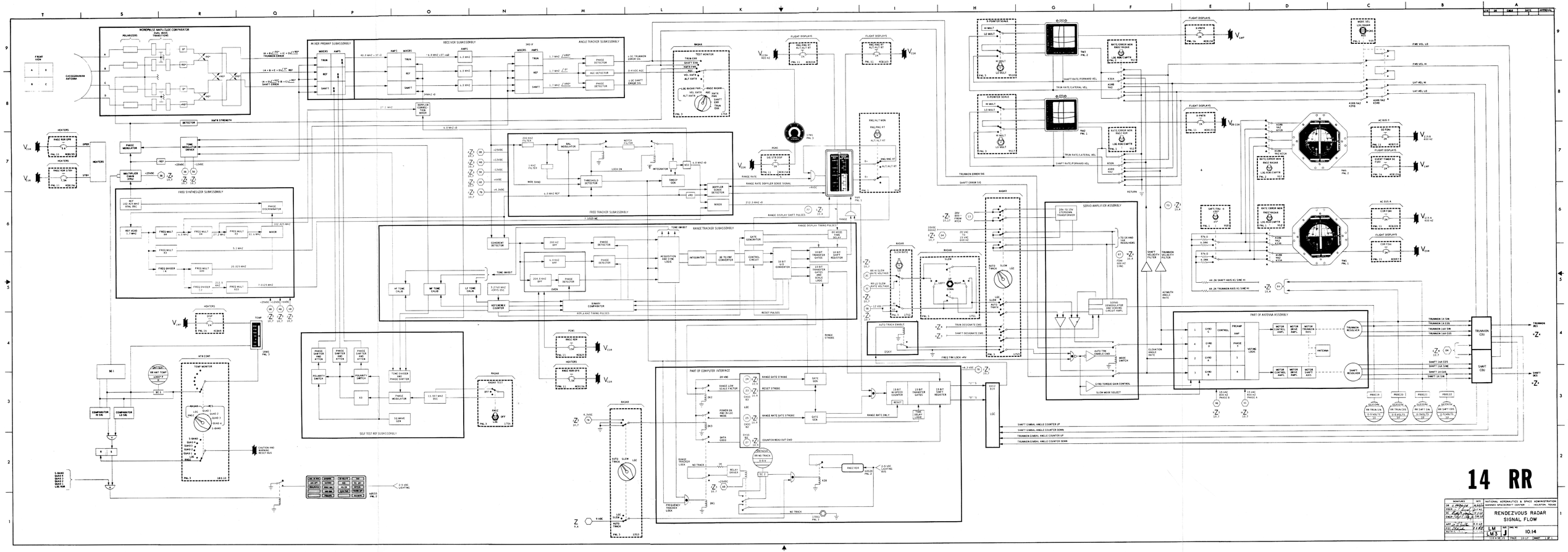
MONOPULSE AMPLITUDE COMPARATOR DUAL MODE TRANSPONDER
POLARIZERS
CASSEGRANIAN ANTENNA
MIXER PREAMP SUBASSEMBLY
RECEIVER SUBASSEMBLY
ANGLE TRACKER SUBASSEMBLY
RADAR
TEST MONITOR
FLIGHT DISPLAYS
HEATERS
DETECTOR
XMTR STRENGTH
PHASE MODULATOR
TONE MODULATOR DRIVER
MULTIPLIER CHAIN (XTAL)
FREQ SYNTHESIZER SUBASSEMBLY
FREQ TRACKER SUBASSEMBLY
RANGE TRACKER SUBASSEMBLY
SELF TEST REF SUBASSEMBLY
PART OF COMPUTER INTERFACE
SERVO AMPLIFIER ASSEMBLY
PART OF ANTENNA ASSEMBLY
RANGE/ALT MON
RANGE RATE
RANGE RATE DOPPLER SENSE SIGNAL
RANGE DISPLAY SHAFT PULSES
RANGE DISPLAY TIMING PULSES
TRUNNION ERROR SIG
SHAFT ERROR SIG
TRUNNION VELOCITY FILTER
SHAFT VELOCITY FILTER
AZIMUTH RATE
ELEVATION RATE
RETURN
TRUNNION CDU
SHAFT CDU
TRUNNION SHAFT
SHAFT SHAFT
14 RR
NATIONAL AERONAUTICS & SPACE ADMINISTRATION
MANNED SPACECRAFT CENTER
HOUSTON, TEXAS
RENDEZVOUS RADAR
SIGNAL FLOW
LM
LM3
10.14

LTR	DR	ENGR	DATE	APPROVAL

SM

CM

A - RF PWR (1.25 TO 5 VDC)
B - RCVR AGC (0 TO 4.5 VDC)
C - FREQ LOCK (4.5 VDC)
D - RCVR AGC (0 TO 4.5 VDC)

NOTE:
B READOUT IS TEST AGC
AND D READOUT IS RECEIVED
AGC VIA ANTENNA

FREQ LOCK
RCVR AGC
RF PWR
SIGNAL COND
FREQ LOCK
RCVR AGC
RF PWR

+25 VDC
SELF TEST DSC
ON
+12 VDC

CIRCULATOR
fo
AUTO PCQ AND PHASE LOCK RCVR 9832.8 MHZ
RECEIVED TONES

RENDEZVOUS RADAR TRANSPONDER ANTENNA

XMTR CARRIER FREQ REF

6.4 HZ AND 204.8 KHZ FILTER HEATER

fo 240/241
XMTR 9792 MHZ

200 HZ 6.4 KHZ AND 204.8 KHZ TONES

POWER SUPPLY

+12 VDC | -12 VDC | +25 VDC

RENDEZVOUS RADAR TRANSPONDER

SYSTEMS TEST

D
C
B
A

A B C D

LEB 101 S2

SYSTEMS TEST

XPNDR
OFF
6
5
4
3
2
1
OFF

3 4 5
2 6
1 OFF
OFF XPNDR

LEB 101 S1

SYSTEMS TEST

0 1 2 3 4 5
DC VOLTS

LEB 101

RNDZ XPNDR PWR

RNDZ XPNDR PWR
OFF
HEATER

RNDZ XPNDR PWR

OFF

HEATER

LEB 100 S3

RNDZ XPNDR FLT BUS
5A
RHEB 225 CB15

V_F +28 VDC

15 XPNDR

SIGNATURES	DATE
DR Marvelina Martinez	1/10/68
DSGN C. P. Brock	3-27-68
QC Betty M. Taylor	4-4-68
ENGR Floyd E. Craig Jr.	3/29/68
APP R. L. Carlton	4-4-68
FEC D. H. Fisher	4-4-68
AUTH Don Bruns	4-8-68

NATIONAL AERONAUTICS & SPACE ADMINISTRATION
MANNED SPACECRAFT CENTER · HOUSTON, TEXAS

TRANSPONDER

LM
LM-3

SIZE D

DWG NO. 10.15

33 X 21.25 | PAGE 10-18 | SHEET 1 OF 1

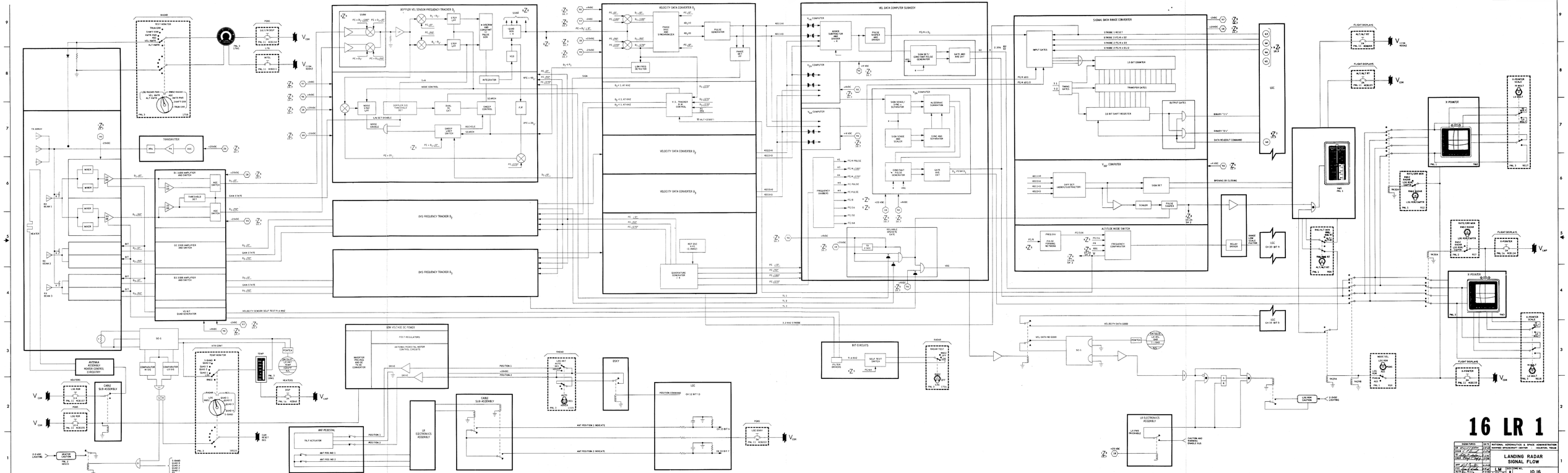

16 LR 1

SIGNATURES	DATE
LR Lead Engr	
LR Sys Engr	
LR Design Engr	
LR Design Engr	
APP Mgr LR Sys Engr	
ACTG Mgr Engrg Data Control	

NATIONAL AERONAUTICS & SPACE ADMINISTRATION
MANNED SPACECRAFT CENTER HOUSTON, TEXAS

LANDING RADAR
SIGNAL FLOW

SYSTEM	DRAWING NO.
LM-3J	10.16

10 X 10.25 | PAGE 10-LR | SHEET 1 OF 2

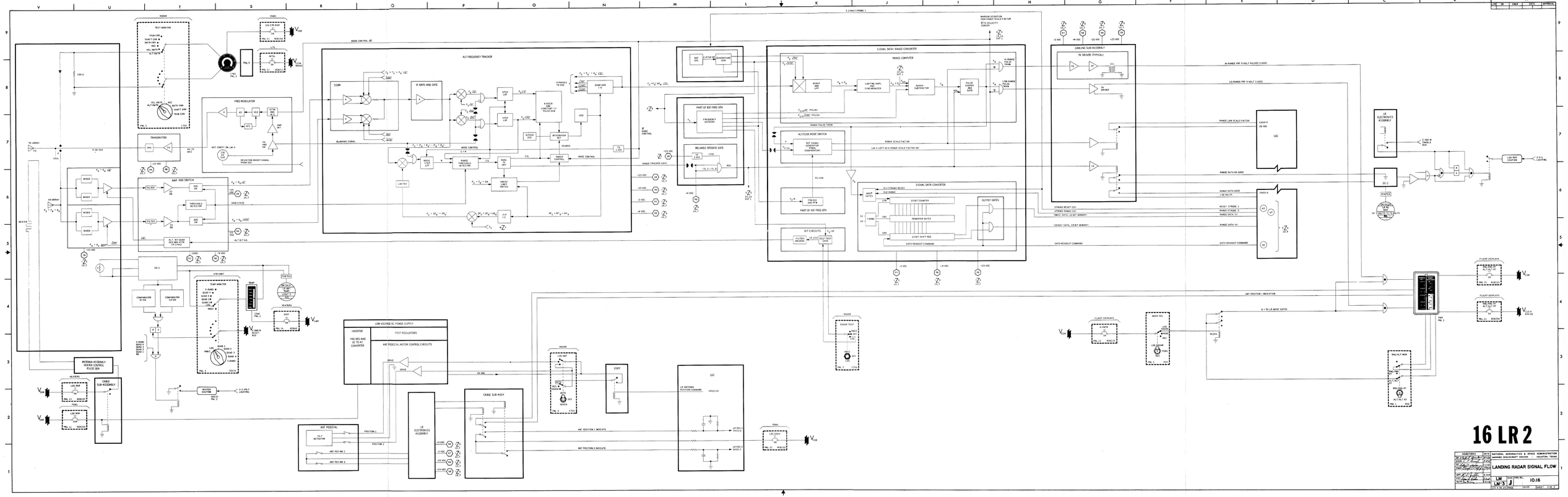
16 LR 2
LANDING RADAR SIGNAL FLOW
NATIONAL AERONAUTICS & SPACE ADMINISTRATION
MANNED SPACECRAFT CENTER — HOUSTON, TEXAS
LM LM-5 J
10.16
SHEET 1 OF 2
RADAR
TEST MONITOR
ANTENNA ASSEMBLY
VELOCITY
RANGE CONTROL
PULSE GEN
CABLE SUB-ASSEMBLY
TRANSMITTER
RF AMP AND SWITCH
MIXER
FREQ MODULATOR
ALT FREQUENCY TRACKER
SSBR
IF AMPS AND GATE
STEP LOP
STEP LOP
H DOCK DOC CONSTANT "1" PULSE GEN
VCO
INTEGRATOR SET
SWEEP CONTROL
SWEEP LIMIT SWITCH
GUARD GEN
SIGNAL DATA / RANGE CONVERTER
RANGE COMPUTER
MIXER AND LPF
LIMITING AMPL AND SYNCHRONIZER
ADDER-SUBTRACTOR
PULSE WIDTH GATE
ALTITUDE MODE SWITCH
REF SIGNAL GENERATOR (PRA) COMPARATORS
SIGNAL DATA CONVERTER
INPUT GATES
13 BIT COUNTER
TRANSFER GATES
13 BIT SHIFT REG
OUTPUT GATES
DATA READOUT COMMAND
BIT CIRCUITS
FILTERS DRIVERS
SELF TEST GATES
PART OF RGP FREQ GEN
FREQUENCY DIVIDERS
RELIABLE OPERATE GATE
FAIL
RGC
CABLING SUB-ASSEMBLY
5V DRIVER (TYPICAL)
5V DRIVER
LGC
LR ELECTRONICS ASSEMBLY
SC-1
SC-0
LOW VOLTAGE DC POWER SUPPLY
INVERTER
PRE-REG AND DC TO AC CONVERTER
POST REGULATORS
ANT PEDESTAL MOTOR CONTROL CIRCUITS
ANT PEDESTAL
TLT ALTIMETER
DSKY
CDR
MODE SEL
LDG ALTIMETER
ALT/VEL MTR
ANT POSITION / INDICATION
FLIGHT DISPLAYS
HEATERS
HTR CONT
TEMP MONITOR
HEATER CAUTION
2-3 VOLT LIGHTING
ANT POS IND 1
ANT POS IND 2
ANT POSITION 1 INDICATE
ANT POSITION 2 INDICATE
LR ANTENNA POSITION COMMAND
LR POS 1 CH33-A
LR POS 2 CH33-B
LGC DSKY
RANGE LOW SCALE FACTOR
RANGE DATA NO GOOD
RANGE DATA GOOD
+28 VOLTS
RESET STROBE 1
RANGE STROBE 2
RANGE DATA "1"
RANGE DATA "0"
STROBE RESET (S1)
STROBE RANGE (S2)
"ONES"-DATA, 13 BIT BINARY
"ZEROS"-DATA, 15 BIT BINARY
DATA READOUT COMMAND
HI-RANGE PRF 5 VOLT PULSES 3 VOSC
LO-RANGE PRF 5 VOLT 3 VOSC
LR ELECTRONICS ASSEMBLY
S AND W ENABLE BUS
LR RGP CAUTION
2-3 V LIGHTING
ALT/VEL MTR
RNG/RNG RT
ALT/VEL RT
RADAR TEST
LR ANT
RNG
VEL
DATA
LR RGP
LR ANT
RNG
VEL
DATA
LR RGP
RADAR
LR ANT
RNG
VEL
DATA
LR RGP

TABLE 10-11. - SCS POWER DISTRIBUTION

	POWER	DWG NO	Z	REFERENCED TO:
10	4CB79 ASA CKT BREAKER ($I_{V_{LMP}}$)	10.18	S-5	ASA TEMPERATURE CONTROL UNIT
11	+28 VDC FROM ASA POWER SUPPLY	10.18	T-2 T-8	PULSE TORQUING SERVO AMPLIFIER PULSE TORQUING SERVO AMPLIFIER
12	+12 VDC FROM ASA POWER SUPPLY	10.18	U-3 U-8 U-9	PULSE TORQUING SERVO AMPLIFIER PULSE TORQUING SERVO AMPLIFIER ACCELEROMETER
13	+4 VDC FROM ASA POWER SUPPLY	10.18	T-3 T-8 U-6	PULSE TORQUING SERVO AMPLIFIER PULSE TORQUING SERVO AMPLIFIER FREQUENCY COUNTDOWN UNIT
14	-2 VDC FROM ASA POWER SUPPLY	10.18	T-3 T-5 T-8	PULSE TORQUING SERVO AMPLIFIER FREQUENCY COUNTDOWN UNIT PULSE TORQUING SERVO AMPLIFIER
15	-6 VDC FROM ASA POWER SUPPLY	10.18	T-3 U-8	PULSE TORQUING SERVO AMPLIFIER PULSE TORQUING SERVO AMPLIFIER
16	-12 VDC FROM ASA POWER SUPPLY	10.18	T-3 T-8 U-8	PULSE TORQUING SERVO AMPLIFIER PULSE TORQUING SERVO AMPLIFIER ACCELEROMETER
17	2-5 VDC FROM 16R2 AND 16S4	10.18	I-1	DEDA OPERATOR ERROR LIGHTING
18	+ 28 VDC FROM AEA POWER SUPPLY	10.18	F-3	AEA TEST FAILURE, ENGINE ON, AND ENGINE OFF POWER
19	NOT USED			
20	+4 VDC FROM C&W POWER SUPPLY	10.17	M-5	C&W RESET BUS TO GYRO TEST SW 11S1
21	29 VAC 3ø 400 HZ FROM ASA POWER SUPPLY	10.18	U-2	ASA GYRO SPIN MOTOR POWER
22	+9 VDC FROM C&W POWER SUPPLY	10.17	I-1	C&W ENABLE BUS FOR PREAMPS CAUTION
23	D/A 400 HZ FROM AEA POWER SUPPLY	10.18	F-8	AEA D/A 400 HZ POWER
24	20-115 VAC 800 HZ FROM 16R2 AND 16S5	10.18	N-7	DEDA DIGIT DISPLAY
25	15-75 VAC 400 HZ FROM 16R3 AND 16S3	10.18	I-2	DEDA KEYBOARD
26	+4 VDC FROM AEA POWER SUPPLY	10.18	N-6	DEDA LOGIC POWER
27	+22 VAC 8 K HZ FROM ASA POWER SUPPLY	10.18	V-4	ASA GYRO PICKOFF EXCITATION
28	-2 VDC FROM AEA POWER SUPPLY	10.18	N-6	DEDA LOGIC POWER
29	1.5 VAC 8 KHZ FROM ASA POWER SUPPLY	10.18	V-9	ASA ACCELEROMETER EXCITATION
30	NOT USED			
31	26 VAC 800 HZ PHASE A FROM ATCA POWER SUPPLY	10.20 10.20 10.20	T-7 T-5 T-3	YAW RGA MOTOR POWER PITCH RGA MOTOR POWER ROLL RGA MOTOR POWER
32	26 VAC 800 HZ PHASE B FROM ATCA POWER SUPPLY	10.20 10.20 10.20	T-7 T-6 T-3	YAW RGA MOTOR POWER PITCH RGA MOTOR POWER ROLL RGA MOTOR POWER
33	26 VAC 800 HZ PHASE C FROM ATCA POWER SUPPLY	10.20 10.20 10.20	T-6 T-4 T-2	YAW RGA MOTOR POWER PITCH RGA MOTOR POWER ROLL RGA MOTOR POWER
34	26 VAC 800 HZ NEUTRAL FROM ATCA POWER SUPPLY	10.20 10.20 10.20	T-6 T-4 T-2	YAW RGA MOTOR NEUTRAL PITCH RGA MOTOR NEUTRAL ROLL RGA MOTOR NEUTRAL
35	NOT USED			
36	28 VAC 800 HZ SINGLE PHASE FROM ATCA POWER SUPPLY	10.20 10.20 10.20	U-6 U-4 U-2	YAW RGA MICROSYN EXCITATION PITCH RGA MICROSYN EXCITATION ROLL RGA MICROSYN EXCITATION
37	28 VAC 800 HZ SINGLE PHASE FROM PSA/ATCA POWER SUPPLY THRU PGNS/AGS SWITCH 9S6	10.20 10.20.1 10.20.1 10.20.1	T-9 F-7 F-4 F-3	ACA EXCITATION YAW ACA EXCITATION PITCH ACA EXCITATION ROLL ACA EXCITATION
38	NOT USED			
39	NOT USED			
40	+28 VDC FROM ATCA POWER SUPPLY	10.20 10.20 10.20 10.20 10.20 10.20 10.20 10.20 10.20 10.20 10.20 10.4 10.20.9 10.23	P-6 Q-5 P-4 Q-4 P-3 Q-2 M-6 M-4 M-3 I-6 I-2 I-1 U-3 B-5 P-7	YAW ACA AND RGA INPUT SIGNAL GAINS YAW AEA ATT INPUT SIGNAL GAINS PITCH ACA AND RGA INPUT SIGNAL GAINS PITCH AEA ATT INPUT SIGNAL GAINS ROLL ACA AND RGA INPUT SIGNAL GAINS ROLL AEA ATT INPUT SIGNAL GAINS YAW MODE CONTROL SW 11S5 PITCH MODE CONTROL SW 11S3 ROLL MODE CONTROL SW 11S4 YAW 2/4 JET PITCH 2/4 JET ROLL 2/4 JET AGS DEADBAND SWITCHING RELAY DRIVER RELAY DRIVER ASC ENG ON/OFF
41	-4.7 VDC FROM ATCA POWER SUPPLY	10.20 10.17.2 10.20.9	F-2 B-2 F-2	RCS PREAMP BIAS VOLTAGE RCS PREAMP BIAS VOLTAGE SOURCE RCS PREAMP BIAS VOLTAGE
42	NOT USED			
43	+6 VDC FROM ATCA POWER SUPPLY	10.17.2 10.20.2 10.20.2 10.20.2 10.20.3 10.20.3 10.20.4 10.20.4 10.20.4 10.20.5 10.20.6 10.20.6 10.20.9 10.20.9	C-6 E-7 C-8 E-4 F-7 F-3 B-6 F-4 A-2 F-6 F-6 E-2 E-6 F-3	+6 VDC ATCA POWER SUPPLY SOURCE PITCH LIMITER ROLL AND YAW LIMITER ATTITUDE AND RATE INPUT BUFFER AMP, INPUT SUMMING AMP, DEADBAND, NARROW MODULATOR, PULSE RATIO STROBE AND KEY DEMODULATOR STROBE AND KEY DEMODULATOR AMP, DEADBAND, WIDE ZERO CROSSING DETECTOR 0.5 V REF ZERO CROSSING DETECTOR 0.4 V REF DRIVER, RELAY PRIMARY PREAMP, ABORT PREAMP AND DRIVER SOLENOID
44	-6 VDC FROM ATCA POWER SUPPLY	10.17.2 10.20.2 10.20.2 10.20.3 10.20.3 10.20.4 10.20.4 10.20.5 10.20.5 10.20.6 10.20.6 10.20.9 10.20.9	C-6 E-7 A-8 F-6 F-3 F-3 A-2 F-6 C-2 F-6 E-3 E-5 F-3	-6 VDC ATCA POWER SUPPLY SOURCE PITCH LIMITER ROLL AND YAW LIMITER AMP, INPUT SUMMING AMP, DEADBAND, NARROW STROBE AND KEY DEMODULATOR STROBE AND KEY DEMODULATOR AMP, DEADBAND, WIDE AMP ABSOLUTE VALUE ZERO CROSSING DETECTOR 0.5 V REF ZERO CROSSING DETECTOR 0.4 V REF DRIVER, RELAY PRIMARY PREAMP, ABORT PREAMP, AND DRIVER SOLENOID
45	+4.3 VDC FROM ATCA POWER SUPPLY	10.17.2 10.20.5 10.20.6 10.20.6 10.21 10.23	C-6 C-2 F-7 E-3 T-9 Q-6	+4.3 VDC ATCA POWER SUPPLY SOURCE AMP ABSOLUTE VALUE ZERO CROSSING DETECTOR 0.5 V REF ZERO CROSSING DETECTOR 0.4 V REF ASC ENG AUTO ON/OFF CKT ASC ENG AUTO ON/OFF CKT
46	-15 VDC FROM ATCA POWER SUPPLY	10.17.2 10.20 10.20 10.20.1 10.20.1 10.20.1 10.20.2 10.20.2 10.20.3 10.20.3 10.20.4 10.20.4 10.20.4 10.20.5 10.20.5 10.20.5 10.20.8 10.20.8 10.20.8 10.23	C-6 M-9 K-9 B-8 B-5 B-3 D-8 E-4 B-2 F-5 B-2 D-5 F-2 A-3 C-6 C-4 C-2 F-7 F-5 F-3 Q-6	-15 VDC ATCA POWER SUPPLY SOURCE LMP ACA VOLTAGE SOURCE LMP TTCA VOLTAGE SOURCE YAW ACA CHANNEL PITCH ACA CHANNEL ROLL ACA CHANNEL PITCH LIMITER ATTITUDE AND RATE INPUT BUFFER FILTER ACTIVE AMP, INPUT SUMMING AMP, DEADBAND, NARROW MODULATOR, PULSE RATIO STROBE AND KEY DEMODULATOR STROBE AND KEY DEMODULATOR AMP, DEADBAND, WIDE SUMMING AMP, 2 AND 4 AMP ABSOLUTE VALUE Z TRANSLATION SW Y TRANSLATION SW X TRANSLATION SW ASC ENG AUTO ON/OFF CKT

	POWER	DWG NO	Z	REFERENCED TO:
47	+15 VDC FROM ATCA POWER SUPPLY	10.17.2 10.20 10.20 10.20.1 10.20.1 10.20.1 10.20.2 10.20.2 10.20.2 10.20.3 10.20.3 10.20.4 10.20.4 10.20.5 10.20.5 10.20.5 10.20.8 10.20.8 10.20.8 10.23 10.23	C-5 M-7 J-9 B-8 B-5 B-3 F-8 E-6 B-3 F-7 B-4 D-7 F-4 B-8 C-5 C-3 F-7 F-5 F-3 S-6 F-6	+15 VDC ATCA POWER SUPPLY SOURCE LMP ACA VOLTAGE SOURCE LMP TTCA VOLTAGE SOURCE YAW ACA CHANNEL PITCH ACA CHANNEL ROLL ACA CHANNEL PITCH LIMITER ATTITUDE AND RATE INPUT BUFFER FILTER ACTIVE AMP, INPUT, SUMMING AMP, DEADBAND, NARROW MODULATOR, PULSE RATIO STROBE AND KEY DEMODULATOR AMP, DEADBAND, WIDE SUMMING AMP, 2 AND 4 AMP, ABSOLUTE VALUE +Z TRANSLATION VOLTAGE +Y TRANSLATION VOLTAGE +X TRANSLATION VOLTAGE ASC ENG AUTO ON/OFF ASC ENG AUTO ON/OFF CA 1-K14
48	28 VDC PRIMARY POWER INPUT TO ATCA POWER SUPPLY FROM 4CB82	10.17.2	F-7	PRIMARY POWER INPUT TO ATCA POWER SUPPLY
49	28 VDC REDUNDANT - 4.7 VDC BIAS POWER SUPPLY INPUT	10.17.2	F-2	INPUT VOLTAGE FOR -4.7 VDC BIAS POWER SUPPLY
50	+28 VDC AVAILABLE ONLY WHEN DESCENT ENGINE IS ARMED NOTE THE +28 VDC ON DWG 10.21 K Z 6 AND DWG 10.17 C Z 2 ARE THE SAME POWER SOURCE	10.17.3 10.21 10.21 10.21 10.21 10.21 10.22 10.22 10.22	F-8 P-7 K-7 K-7 J-8 K-4 I-4 I-2 F-6	28 VDC INPUT TO DECA POWER SUPPLY DESCENT ENGINE AUTO ON/OFF LOGIC DECA K21 - PITCH TRIM FAIL DECA K22 - ROLL TRIM FAIL DECA K3 - MANUAL DES ENGINE OFF DECA K26 - ATCA POWER FAIL MONITOR DECA - K22 - ROLL TRIM FAIL DECA K-21 - PITCH TRIM FAIL 28 VDC INPUT TO THROTTLE ACTUATOR
51	NOT USED			
52	+15 VDC INPUT TO DECA POWER SUPPLY WHEN DESCENT ENGINE IS ARMED THAT BYPASSES ATCA POWER FAILURE RELAY	10.17.3	B-3	USED TO GENERATE +5.6 VDC TO SEND TO DESCENT ENGINE ON/OFF CKT. THIS IS ONE OF THREE SOURCES FOR THAT CKT
53	115 VAC 400 HZ INPUT TO DECA POWER SUPPLY WHEN DESCENT ENGINE IS ARMED	10.17.3 10.21	F-6 I-2	VOLTAGE INPUT TO AUXILIARY POWER SUPPLY AND TO GIMBAL DRIVE ASSEMBLY
54	+4.3 VDC INPUT TO DECA POWER SUPPLY AND INTERNAL DECA CKTS WHEN DESCENT ENGINE IS ARMED	10.17.3 10.21 10.22 10.22 10.22 10.22 10.22 10.22 10.22 10.22	E-4 I-3 U-5 U-1 S-4 S-1 R-6 L-6 L-4 L-2 I-8	VOLTAGE INPUT TO PWR FAILURE COMPARATOR INPUT TO DECA POWER SUPPLY ROLL TRIM ERROR PITCH TRIM ERROR ROLL 400 HZ SWITCH PITCH 400 HZ SWITCH SYNC GENERATOR AUTOMATIC THROTTLE LOGIC ROLL TRIM COMBINATION AND MALFUNCTION LOGIC PITCH TRIM COMBINATION AND MALFUNCTION LOGIC AUTOMATIC THROTTLE LOGIC
55	-15 VDC INPUT TO DECA POWER SUPPLY AND INTERNAL DECA CKTS WHEN DESCENT ENGINE IS ARMED	10.17.3 10.21 10.22 10.22 10.22 10.22 10.22 10.22 10.22	F-5 I-4 S-6 R-4 R-1 O-5 O-2 K-8 F-5	VOLTAGE INPUT TO DECA POWER SUPPLY INPUT TO DECA POWER SUPPLY SYNC GENERATOR ROLL 400 HZ SWITCH PITCH 400 HZ SWITCH ROLL TRIM ERROR FEEDBACK PITCH TRIM ERROR FEEDBACK AUTOMATIC THROTTLE LOGIC -15 VDC INPUT TO THROTTLE ACTUATOR
56	+15 VDC INPUT TO DECA POWER SUPPLY AND INTERNAL DECA CKTS WHEN DESCENT ENGINE IS ARMED	10.17.3 10.21 10.22 10.22 10.22 10.22 10.22 10.22 10.22	F-3 I-3 S-4 S-1 O-5 O-2 K-9 F-5	VOLTAGE INPUT TO DECA POWER SUPPLY INPUT TO DECA POWER SUPPLY ROLL 400 HZ SWITCH PITCH 400 HZ SWITCH ROLL TRIM ERROR FEEDBACK PITCH TRIM ERROR FEEDBACK AUTOMATIC THROTTLE LOGIC +15 VDC INPUT TO THROTTLE ACTUATOR
57	-22/-15 VDC FROM DECA PWR SUPPLY	10.17.3 10.22	A-7 I-5	SOURCE OF REDUNDANT VOLTAGE FOR MANUAL THROTTLE LOGIC CKT MANUAL THROTTLE LOGIC
58	+22/+15 VDC FROM DECA PWR SUPPLY	10.17.3 10.22	A-7 I-5	SOURCE OF REDUNDANT VOLTAGE FOR MANUAL THROTTLE LOGIC CKT MANUAL THROTTLE LOGIC
59	+6.2/+6.0/+5.6 VDC FROM DECA POWER SUPPLY	10.17.3 10.21	A-3 R-8	SOURCE OF REDUNDANT VOLTAGE FOR DESCENT ENG AUTO ON/OFF CKT DESCENT ENGINE AUTO ON/OFF LOGIC
60	NOT USED			
61	NOT USED			
62	NOT USED			
63	28 VAC 800 HZ SINGLE PHASE FROM PSA/ATCA POWER SUPPLY THRU PGNS/AGS SW 9S6	10.22	N-6	TTCA MANUAL THROTTLE EXCITATION
64	+6.2 VDC FROM DECA PWR SUPPLY	10.17.3 10.22 10.22 10.22 10.22	A-3 U-5 U-1 N-5 N-3	+6.2 VDC DECA POWER SUPPLY SOURCE ROLL TRIM ERROR PITCH TRIM ERROR ROLL TRIM ERROR FEEDBACK PITCH TRIM ERROR FEEDBACK
65	+0.79 VDC FROM DECA PWR SUPPLY	10.17.3 10.22 10.22	A-2 U-5 T-1	+0.79 VDC DECA POWER SUPPLY SOURCE ROLL TRIM ERROR PITCH TRIM ERROR
66	+0.20 VDC FROM DECA PWR SUPPLY	10.17.3 10.22 10.22	A-2 N-5 N-3	+0.20 VDC DECA POWER SUPPLY SOURCE ROLL TRIM ERROR FEEDBACK PITCH TRIM ERROR FEEDBACK
67	+6.2 VDC FROM DECA PWR SUPPLY	10.17.3 10.22 10.22 10.22 10.22	A-2 N-5 N-3 K-8 I-8	+6.2 VDC DECA POWER SUPPLY SOURCE ROLL TRIM ERROR FEEDBACK PITCH TRIM ERROR FEEDBACK AUTOMATIC THROTTLE LOGIC AUTOMATIC THROTTLE LOGIC
68	-0.79 VDC FROM DECA PWR SUPPLY	10.17.3 10.22 10.22	A-2 T-5 T-1	-0.79 VDC FROM DECA POWER SUPPLY ROLL TRIM ERROR PITCH TRIM ERROR
69	-0.20 VDC FROM DECA PWR SUPPLY	10.17.3 10.22 10.22	A-1 N-5 N-3	-0.20 VDC DECA POWER SUPPLY SOURCE ROLL TRIM ERROR FEEDBACK PITCH TRIM ERROR FEEDBACK

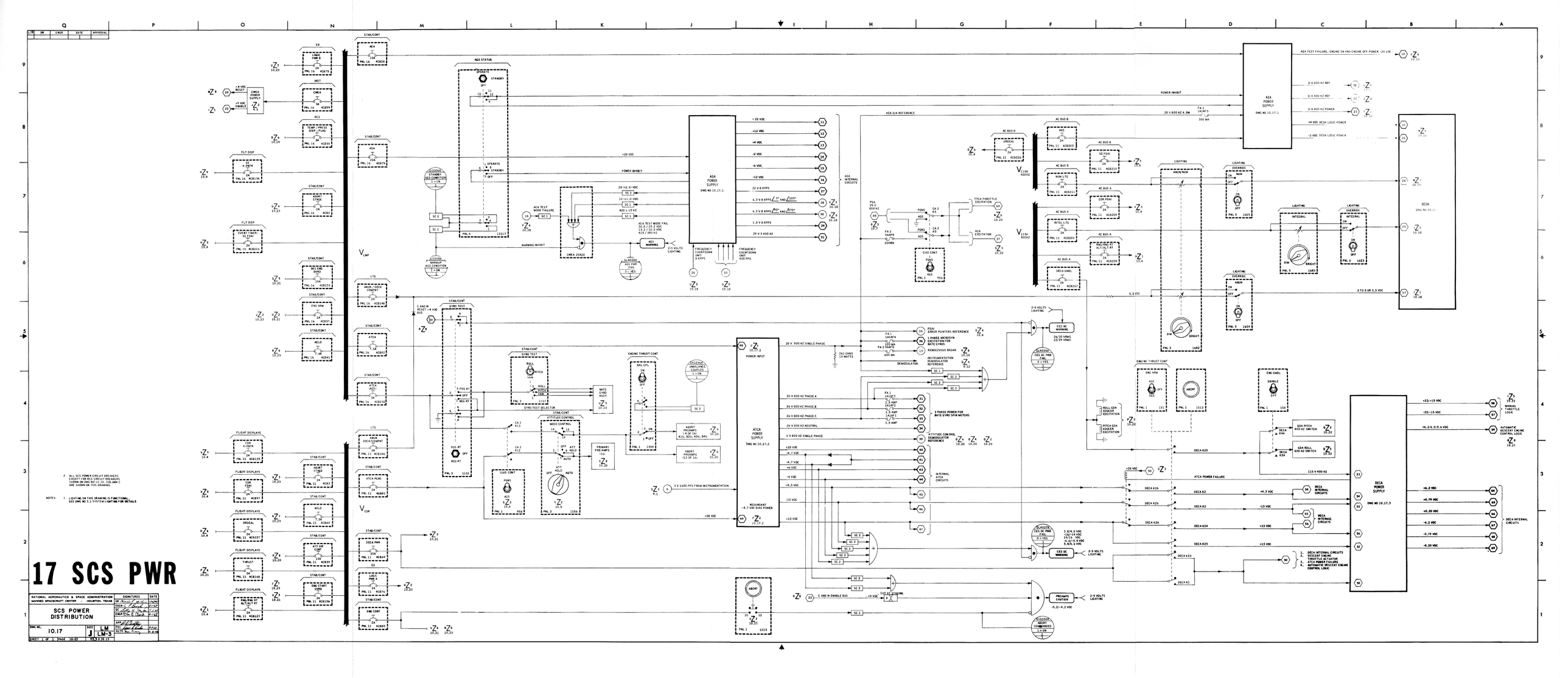
17 SCS PWR
SCS POWER DISTRIBUTION
NATIONAL AERONAUTICS & SPACE ADMINISTRATION
MANNED SPACECRAFT CENTER - HOUSTON, TEXAS
DWG NO. 10.17
SIZE J
LM LM-3
SHEET 1 OF 1 PAGE 10-22
NOTES:
1. LIGHTING ON THIS DRAWING IS FUNCTIONAL SEE DWG NO 3.1.1 SYSTEM LIGHTING FOR DETAILS
2. ALL SCS POWER CIRCUIT BREAKERS EXCEPT 7 OR RCS CIRCUIT BREAKERS SHOWN ON DWG NO 10.20, COLUMN 2 ARE SHOWN ON THIS DRAWING.
ASA POWER SUPPLY DWG NO 10.17.1
ATCA POWER SUPPLY DWG NO 10.17.2
DECA POWER SUPPLY DWG NO 10.17.3
ASA INTERNAL CIRCUITS
DECA INTERNAL CIRCUITS
ATCA INTERNAL CIRCUITS
3 PHASE POWER FOR RATE GYRO SPIN MOTORS
ATTITUDE CONTROL DEMODULATOR REFERENCE
3 V 1600 PPS FROM INSTRUMENTATION
28 V 800 HZ SINGLE PHASE
26 V 800 HZ PHASE A
26 V 800 HZ PHASE B
26 V 800 HZ PHASE C
26 V 800 HZ NEUTRAL
6 V 800 HZ SINGLE PHASE
+28 VDC
-4.7 VDC
+6 VDC
+4.3 VDC
-15 VDC
+15 VDC
REDUNDANT -4.7 VDC BIAS POWER
ASA TEST FAILURE, ENGINE ON AND ENGINE OFF POWER +28 VDC
POWER INHIBIT
28 V 800 HZ 4.5W
300 MA
D/A 800 HZ REF
D/A 400 HZ REF
D/A 400 HZ POWER
+6 VDC DECA LOGIC POWER
-2 VDC DECA LOGIC POWER
ASA D/A REFERENCE
+28 VDC
POWER INHIBIT
22 V 8 KPPS
6.3 V 8 KPPS
1.5 V 8 KPPS
29 V 3 400 HZ
FREQUENCY COUNTDOWN 8 KPPS
FREQUENCY COUNTDOWN 400 PPS
2-5 VOLTS LIGHTING
ASA TEST MODE FAIL
ASA TEST MODE FAIL
AGS WARNING
CMEA 2DAGS
AGS STATUS
STANDBY
OPERATE
ASA
ATCA
DECA
ECA
CMEA
RCS
FLT DISP
LTG
ENG ARM
ABORT
ABORT STAGE
ACA
ATCA PEMS
ATT SW CONT
ATT SW START
ENG START
ENG CONT
ALTI/ALT RT
ORDEAL
THRUST
EVENT TIMER
AVION / DOCK COMPNT
GYRO TEST
GYRO TEST SELECTOR
ATTITUDE CONTROL
MODE CONTROL
ENGINE THRUST CONT
ABORT PREAMPS (2 OF 16)
ABORT PREAMPS (12 OF 16)
PRIMARY PREAMPS (16)
RATE GYRO ASSY
ASA POWER SUPPLY
ATCA POWER SUPPLY
DECA POWER SUPPLY
PREAMPS CAUTION
CES AC WARNING
CES AC PWR FAIL
CES DC PWR FAIL
CES DC WIRING
ENG CNTL
ENABLE
ASC ARM
ABORT
ROLL GDA XDUCER EXCITATION
PITCH GDA XDUCER EXCITATION
GDA PITCH 400 HZ SWITCH
GDA ROLL 400 HZ SWITCH
AUTOMATIC DESCENT ENGINE CONTROL LOGIC
MANUAL THROTTLE LOGIC
AC BUS A
AC BUS B
LIGHTING
ANUN/NUM
OVERRIDE
INTEGRAL
BRIGHT
2 TO 5 OR 5.5 VDC
5.5 VDC
115 V 400 HZ
ATCA POWER FAILURE
+28 VDC
+22/+15 VDC
-22/-15 VDC
+6.2/+6.0/5.5 VDC
+6.2 VDC
+0.79 VDC
+0.20 VDC
-6.2 VDC
-0.79 VDC
-0.20 VDC
+4.3 VDC
-15 VDC
+15 VDC
2-5 VOLTS LIGHTING
-5.2/-4.2 VDC
3.8/4.0 VDC
-12/-14 VDC
14/16 VDC
5.6/5.4 VDC
DECA INTERNAL CIRCUITS
1. DECA INTERNAL CIRCUITS
2. DESCENT ENGINE CONTROL SELECTOR
3. ATCA POWER FAILURE
4. AUTOMATIC DESCENT ENGINE CONTROL LOGIC

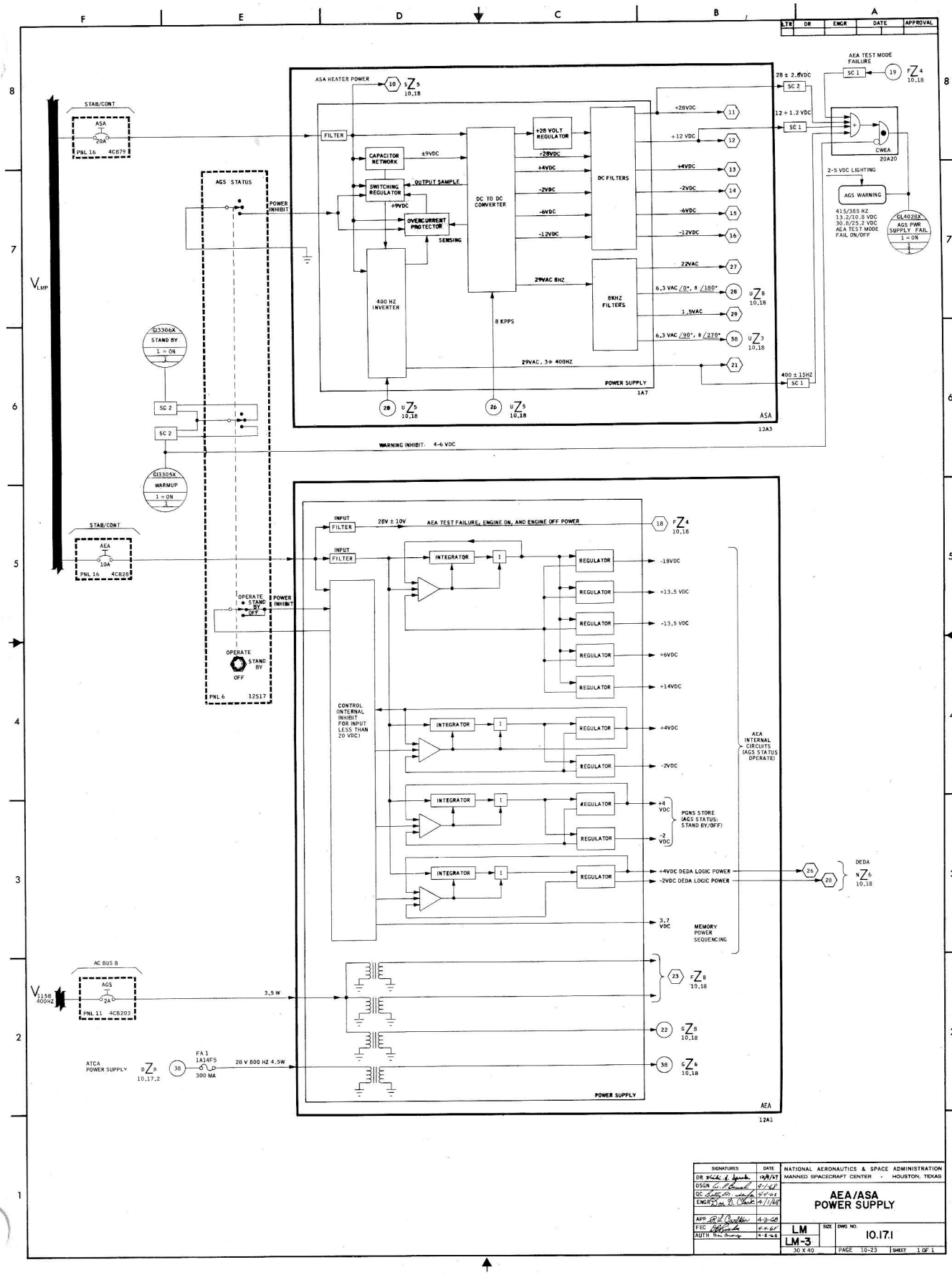

SIGNATURES	DATE
DR	10/9/67
DSGN	11-16
QC	4-24-68
ENGR	4/16/68
APD	4-2-68
FEC	4-6-68
AUTH	4-8-68

NATIONAL AERONAUTICS & SPACE ADMINISTRATION
MANNED SPACECRAFT CENTER - HOUSTON, TEXAS

AEA/ASA POWER SUPPLY

LM
LM-3
SIZE
DWG NO. 10.17.1
30 X 40
PAGE 10-23
SHEET 1 OF 1

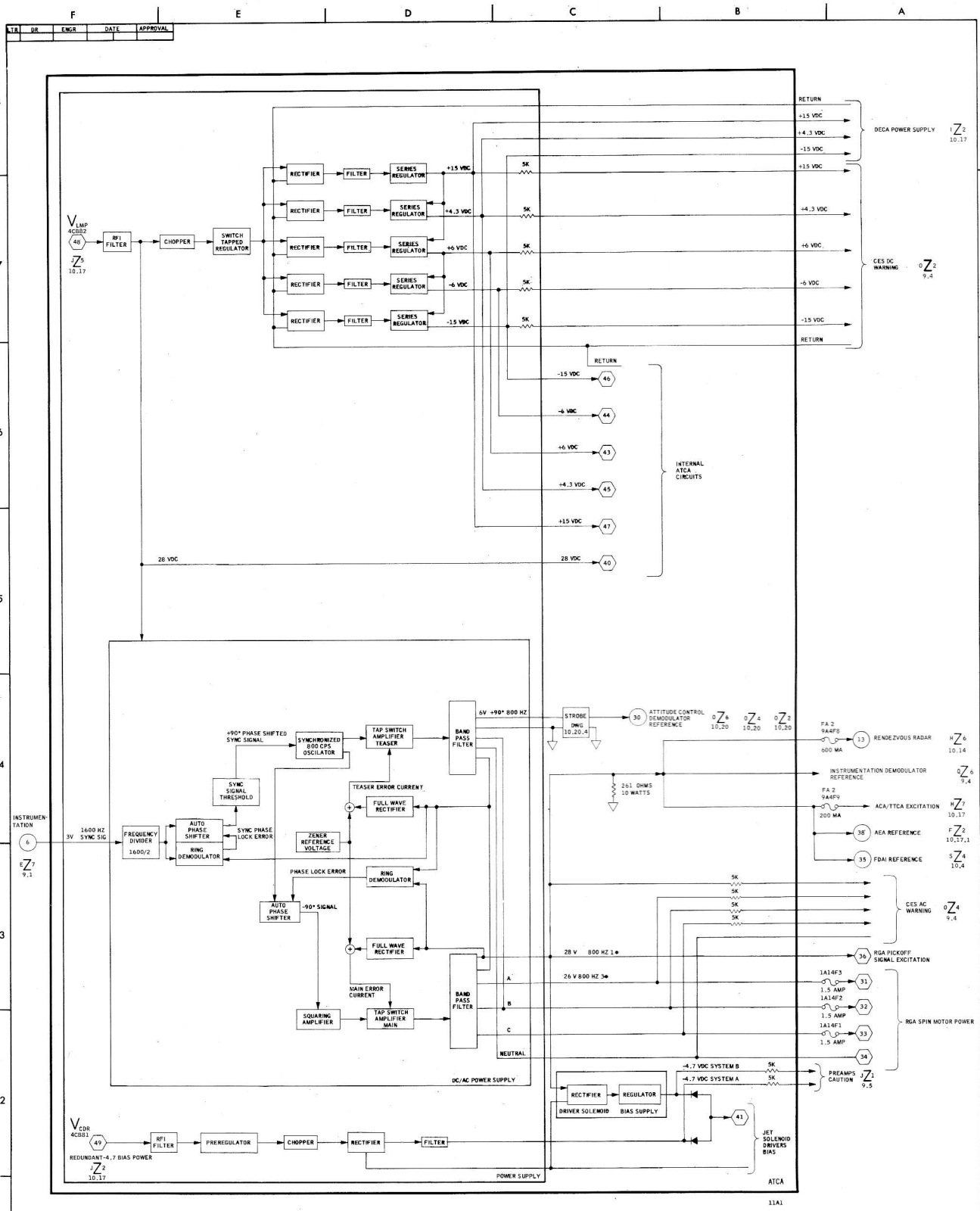

NATIONAL AERONAUTICS & SPACE ADMINISTRATION MANNED SPACECRAFT CENTER - HOUSTON, TEXAS	SIGNATURES	DATE
	DR	1/11/67
	DSGN	4-1-68
	QC	4-4-68
	ENGR	4-1-68
	APP	4-3-68
	FEC	4-4-68
	AUTH	4-4-68

ATCA POWER SUPPLY

DWG NO.	SIZE	
10.17.2	LM	LM 3

SHEET 1 OF 1 | PAGE 10-24 | 30 X 40

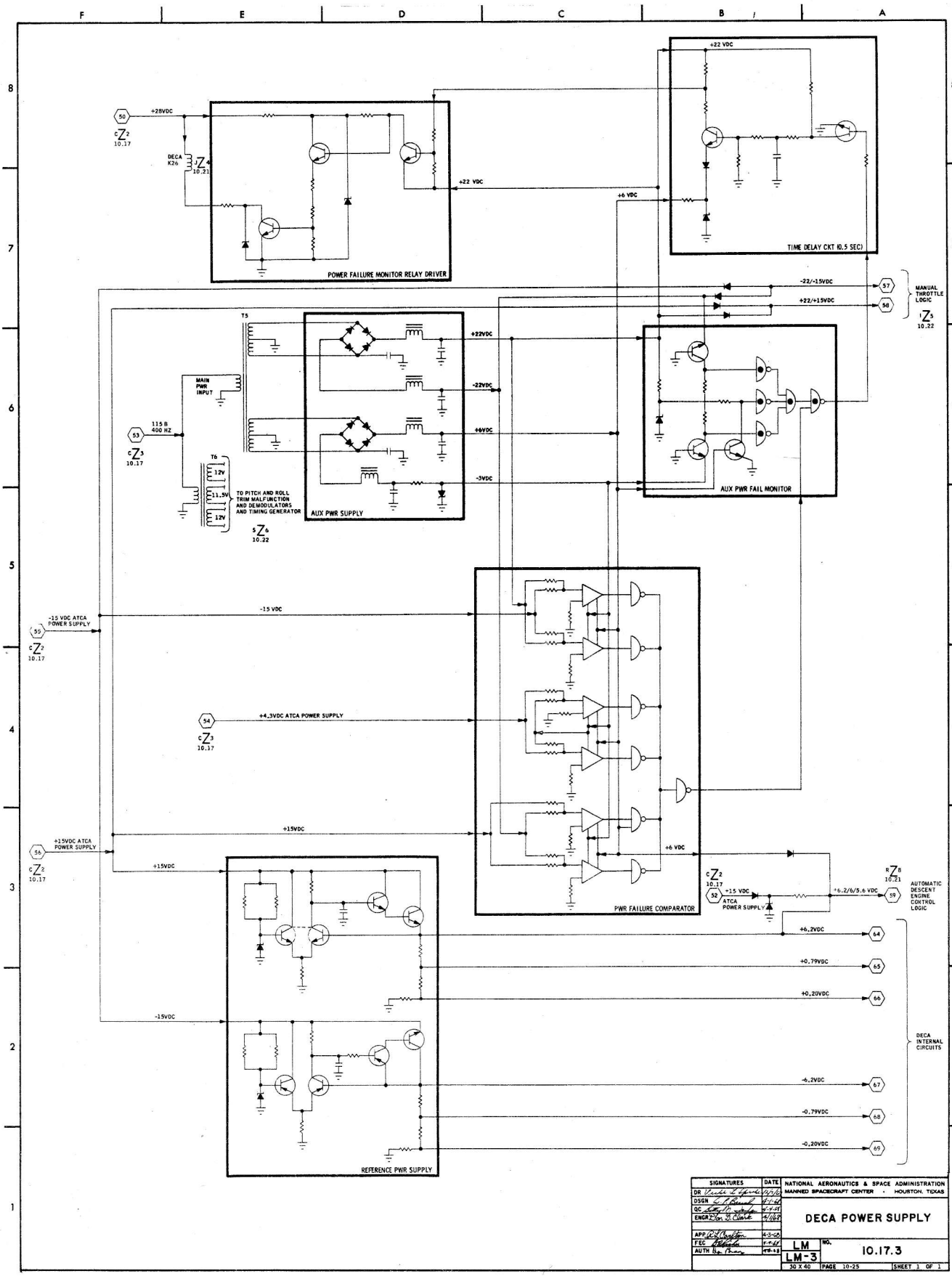

SIGNATURES	DATE
DR	4-4-68
DSGN	4-4-68
QC	4-4-68
ENGR	4/4/68
APP	4-3-68
FEC	4-4-68
AUTH	4-8-68

NATIONAL AERONAUTICS & SPACE ADMINISTRATION
MANNED SPACECRAFT CENTER · HOUSTON, TEXAS

DECA POWER SUPPLY

LM
LM-3
NO. 10.17.3
30 X 40 PAGE 10-25 SHEET 1 OF 1

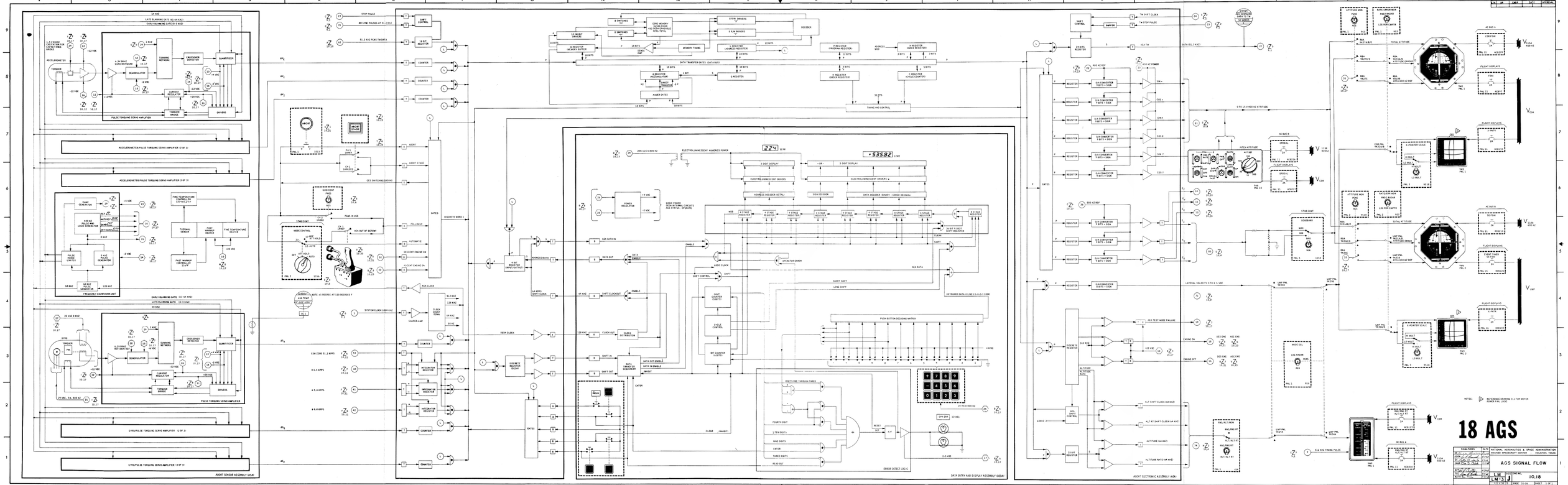
18 AGS
AGS SIGNAL FLOW
LM-3 J
ABORT SENSOR ASSEMBLY (ASA)
ABORT ELECTRONIC ASSEMBLY (AEA)
DATA ENTRY AND DISPLAY ASSEMBLY (DEDA)
PULSE TORQUING SERVO AMPLIFIER
ACCELEROMETER/PULSE TORQUING SERVO AMPLIFIER (2 OF 3)
CYRO/PULSE TORQUING SERVO AMPLIFIER (3 OF 3)
ERROR DETECT LOGIC
NOTES:
REFERENCE DRAWING 2.3 FOR MOTOR POWER PHS. LOGIC
NATIONAL AERONAUTICS & SPACE ADMINISTRATION
MANNED SPACECRAFT CENTER
HOUSTON, TEXAS

LTR	DR	ENGR	DATE	APPROVAL

FROM SC 1 (JD 1)
GR9662U
FROM SC 1 (JD 10)
GR9665U
FROM SC 1 (JD 2)
FROM SC 1 (JD 4)
FROM SC 1 (JD 8)
GR9663U
FROM SC 1 (JD 16)
GR9668U
GR9661U QUAD 4 SYS A CLOSE

INST
CWEA
2A
PNL 16 4CB99
CWEA PWR SUPPLY
RCS MAL DET LOGIC PWR

PWD 80MS DELAY
PWD 80MS DELAY

LOSS OF 6 IN SEQUENCE
RESET
LOSS OF 6 IN SEQUENCE
RESET

A4D TCP
GR5032P TCP
A4R TCP
GR5034P

LGC CH 32 BIT 1

8K13R
8K13S

RCS
THRUSTER PAIR
QUAD 4
OPEN
CLOSE
RCS SYS A
ISOL VALVE A
5A
PNL 11 4CB67
OPEN
CLOSE
PNL 2 8S16
FUEL
OXIDIZER

2-5 VDC LIGHTING
RCS TCA WARNING
GL4031X PNL 1 6DS11

MASTER ALARM

PROPUL
TEMP/PRESS DISP/FLAGS
2A
PNL 16 4CB50
FAIL (RED)
OPEN (GRAY)
CLOSE (BARBERPOLE)
PNL 2 8FL 14

SCERA NO 1
BUFF SIG ISOL CLD
PCM/TEA
BUFF SIG ISOL CLD

THESE CONTACTS ARE MAGNETICALLY ACTUATED AND SHOW STATE OF VALVE POSITION

19 RCS TCA

SIGNATURES	DATE
DR Alice Lowe	3/3/68
DSGN L. A. Bennett	3-27-68
QC Betty M. Taylor	3-3-68
ENGR Odell Stamper	3-27-68
APP R. L. Dalton	4-3-68
FEC D. Brasher	4/4/68
AUTH Don Ling	4-8-68

NATIONAL AERONAUTICS & SPACE ADMINISTRATION
MANNED SPACECRAFT CENTER · HOUSTON, TEXAS

RCS TCA WARNING

LM	SIZE	DWG NO.
LM-3	F	10.19

40 X 28 | PAGE 10-27 | SHEET 1 OF 1

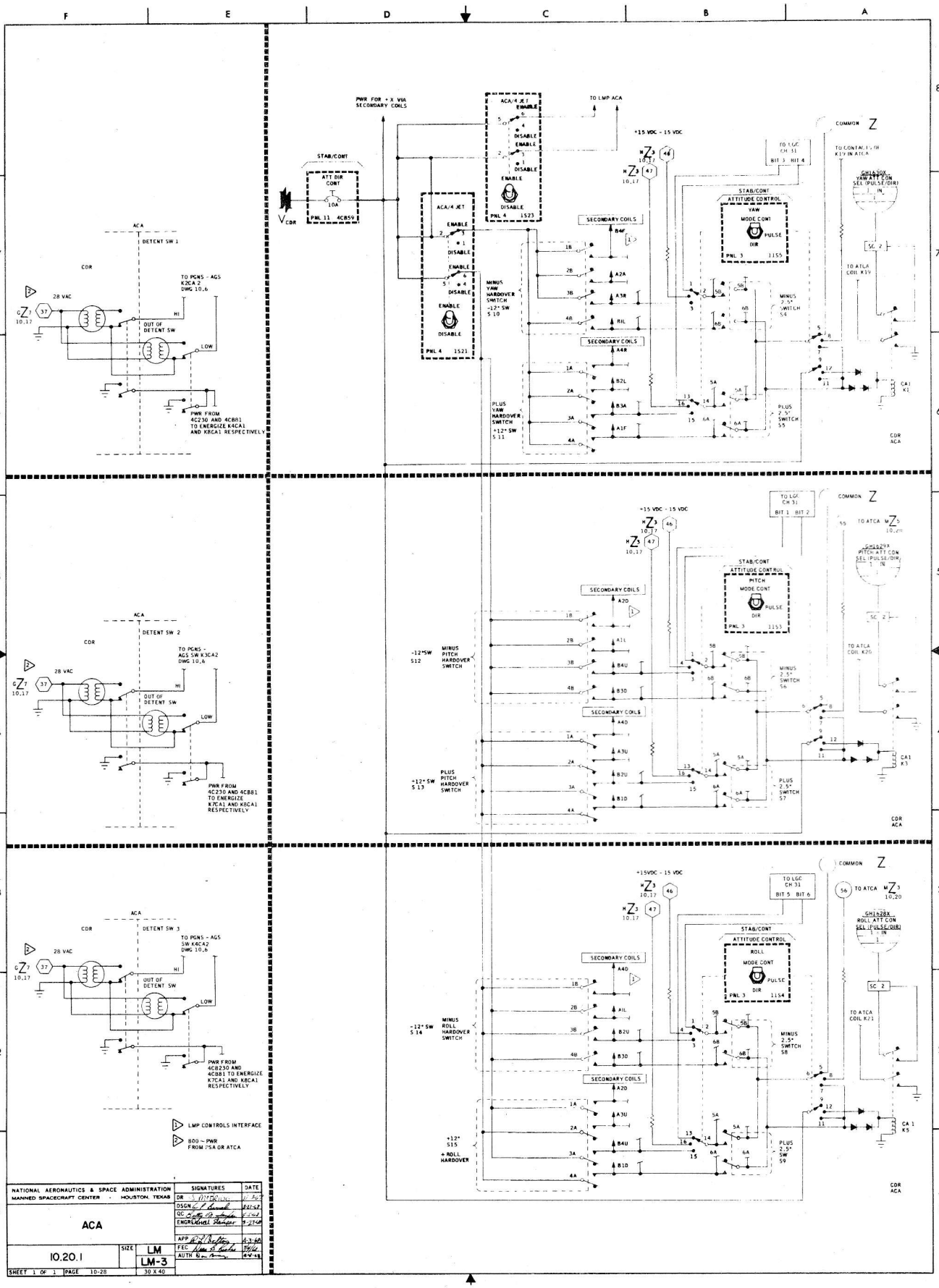

NATIONAL AERONAUTICS & SPACE ADMINISTRATION MANNED SPACECRAFT CENTER · HOUSTON, TEXAS	SIGNATURES	DATE
	DR S. Mitchell	4-5-68
	DSGN C. Smith	4-5-68
	QC Cary D. Smith	4-5-68
	ENGR Daniel Stamper	4-27-68
	APP R. J. Bettes	4-30-68
	FEC Jean C. Smith	5/1/68
	AUTH R. Bettes	4-30-68

ACA

10.20.1	SIZE	LM
		LM-3

SHEET 1 OF 1 | PAGE 10-28 | 30 X 40

LIMITER

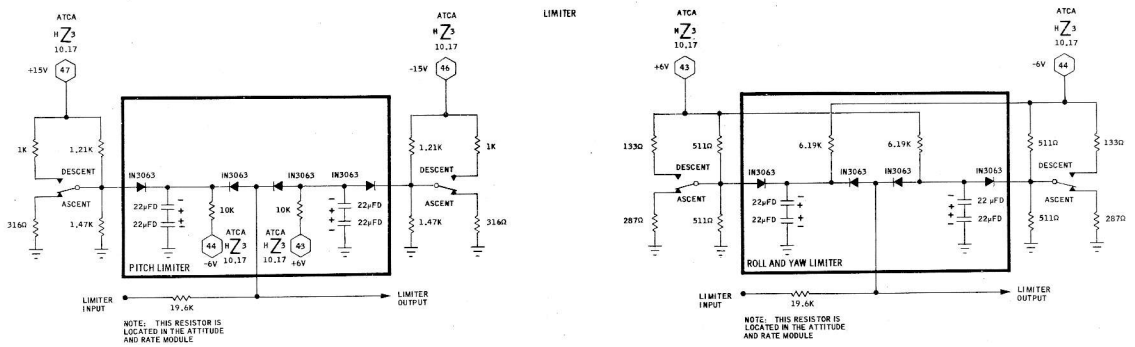

ATTITUDE AND RATE INPUT BUFFER

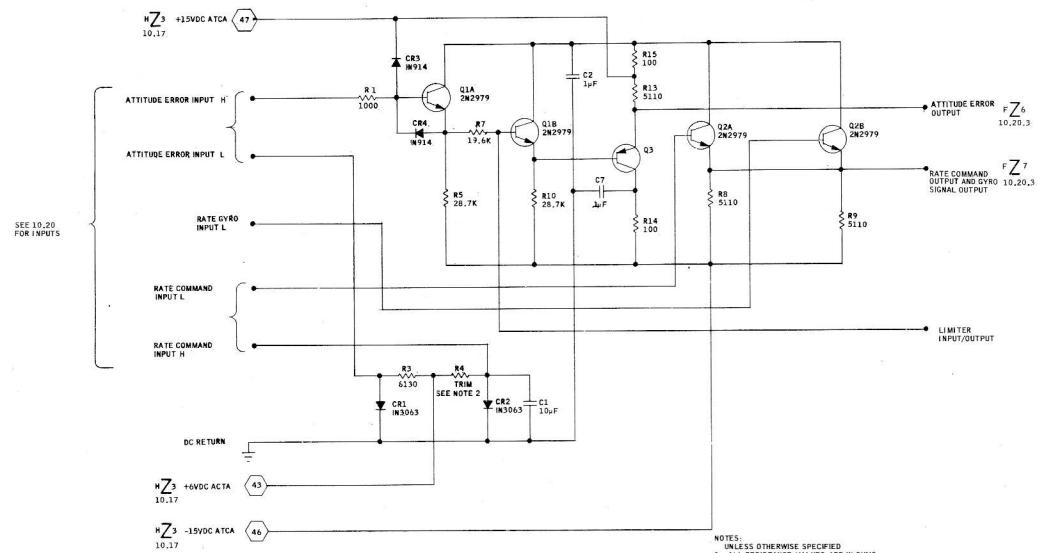

FILTER ACTIVE

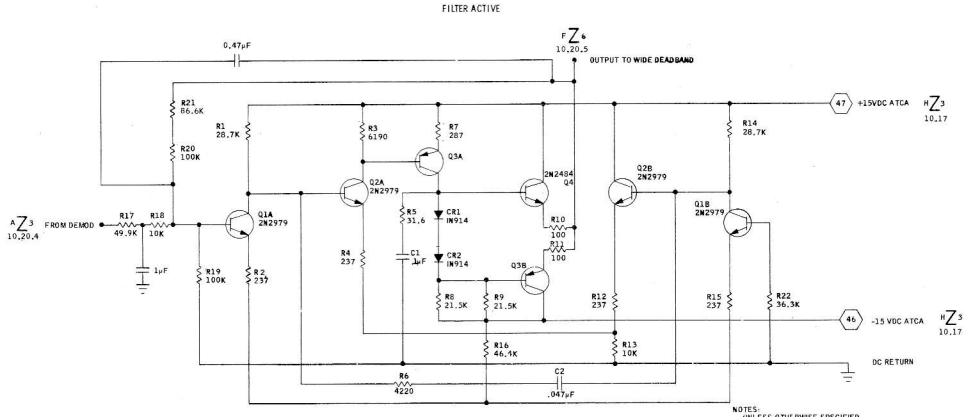

SIGNATURES	DATE
DR J. McBride	1/3/67
DSGN L. L. Bunch	1/3/67
QC Betty D. Hinds	1-4-67
ENGR Kermit Johnson	1/3/67
APP	
FEC	1-4-67
AUTH	1-4-67
	4-28-68

NATIONAL AERONAUTICS & SPACE ADMINISTRATION
MANNED SPACECRAFT CENTER · HOUSTON, TEXAS

LIMITER

LM NO. 10.20.2
LM-3
30 X 40 PAGE 10-29 SHEET 3 OF 1

LTR	DR	ENGR	DATE	APPROVAL

AMP, INPUT SUMMING

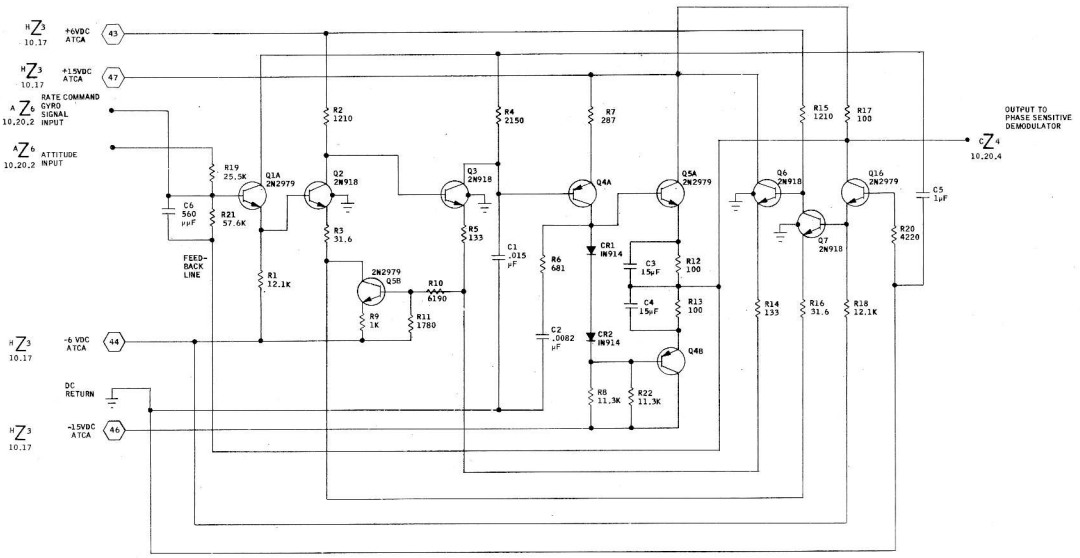

NOTES: 1. ALL RESISTANCE VALUES ARE IN OHMS UNLESS OTHERWISE SPECIFIED.
2. Q2,Q3,Q6,Q7 HAVE GROUNDED CASES.

AMP, DEADBAND, NARROW

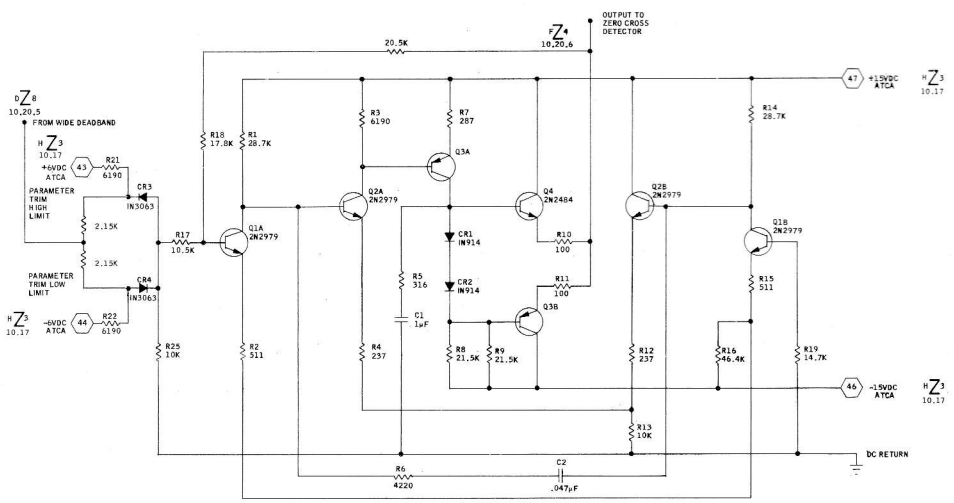

NOTES:
UNLESS OTHERWISE SPECIFIED
1. ALL RESISTANCE VALUES ARE IN OHMS

20.3 AMP 1

NATIONAL AERONAUTICS & SPACE ADMINISTRATION MANNED SPACECRAFT CENTER · HOUSTON, TEXAS	SIGNATURES	DATE
	DR J. McBRIDE	1/2/62
	DSGN L. P. Arnold	1-2-62
	QC	1-4-62
	ENGR	1-2-62
AMPLIFIER I	APP	1-4-62
	FEC	1-4-62
	AUTH	1-8-62

DWG NO.	SIZE	
10.20.3	LM	LM-3

SHEET 1 OF 1 | PAGE 10-30 | 30 X 40

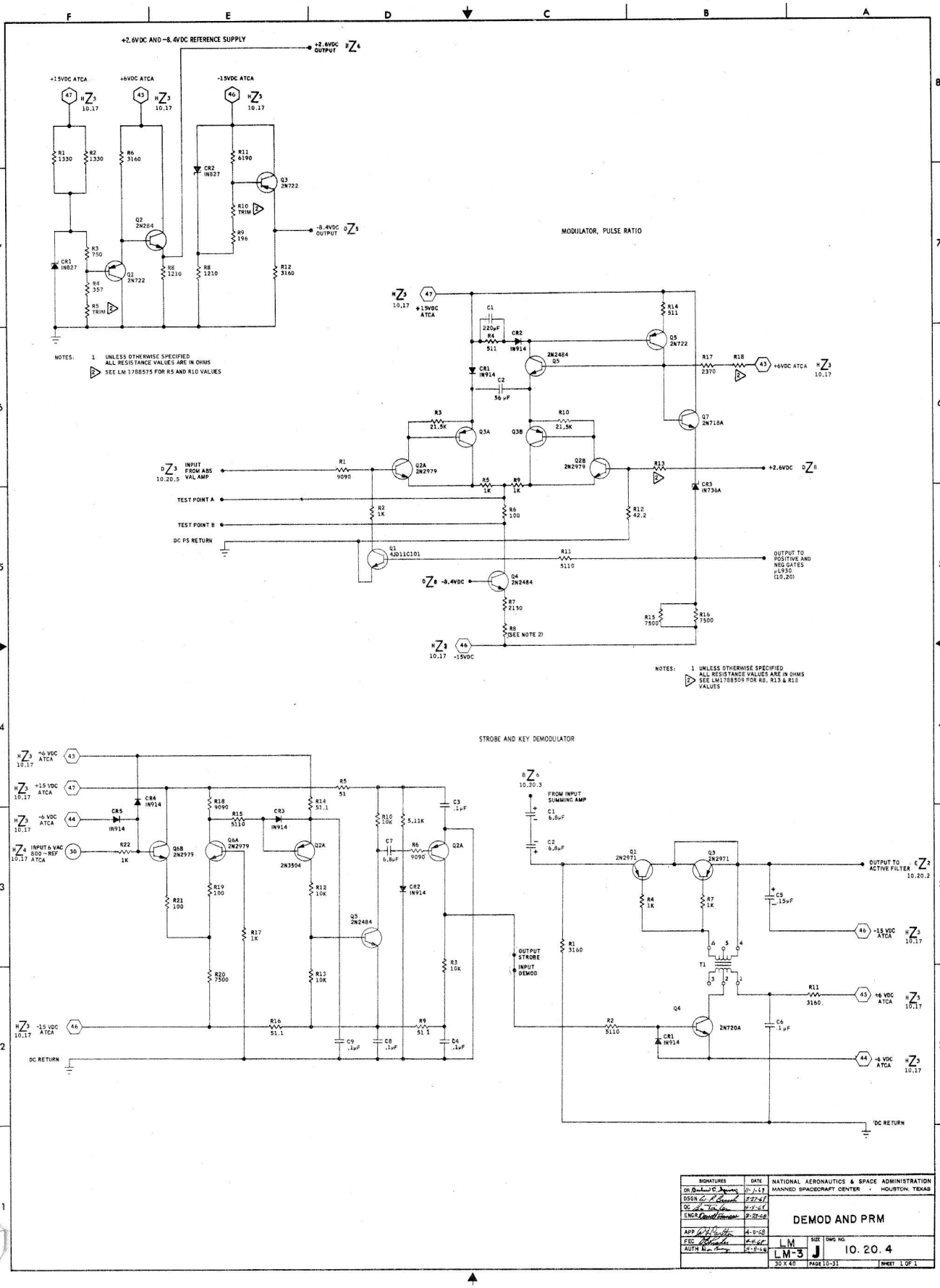

SIGNATURES	DATE
DR	4-1-68
DSGN	5-27-68
QC	4-4-68
ENGR	5-27-68
APP	4-8-68
FEC	4-8-68
AUTH	4-8-68

NATIONAL AERONAUTICS & SPACE ADMINISTRATION
MANNED SPACECRAFT CENTER · HOUSTON, TEXAS

DEMOD AND PRM

LM
LM-3

SIZE J

DWG NO. 10. 20. 4

30 X 40 PAGE 10-31 SHEET 1 OF 1

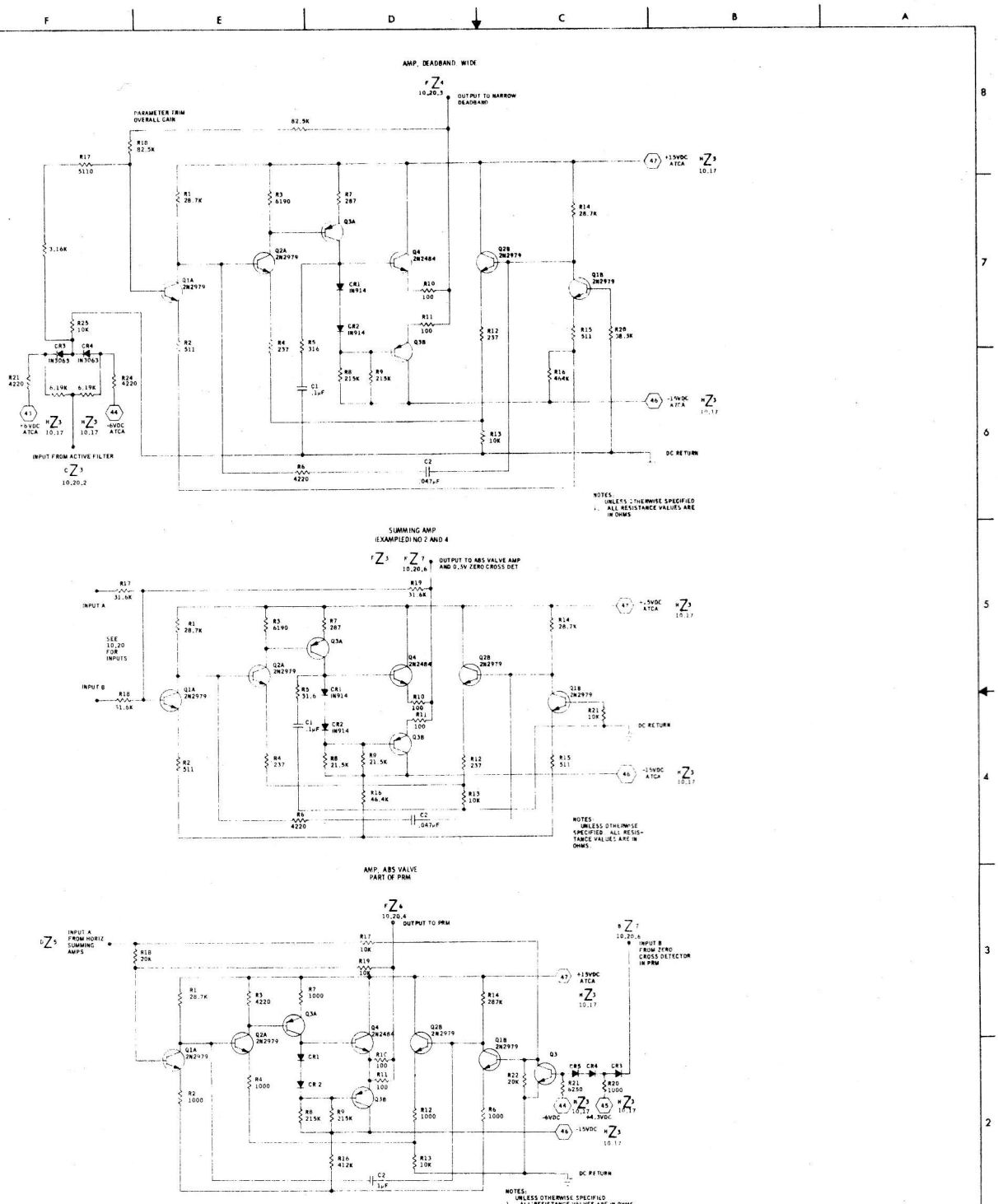

20.5 AMP 2

NATIONAL AERONAUTICS & SPACE ADMINISTRATION MANNED SPACECRAFT CENTER · HOUSTON, TEXAS	SIGNATURES	DATE
	DR	
	DSGN	
AMPLIFIER 2	CK	
	ENGR	
	APP	
	FEC	
	AUTH	
DWG NO. 10.20.5	SIZE LM	
SHEET 1 OF 1 PAGE	LM-3	
	10 X 15	

ZERO CROSSING DETECTOR
0.5 VOLT REF.
PART OF PRM

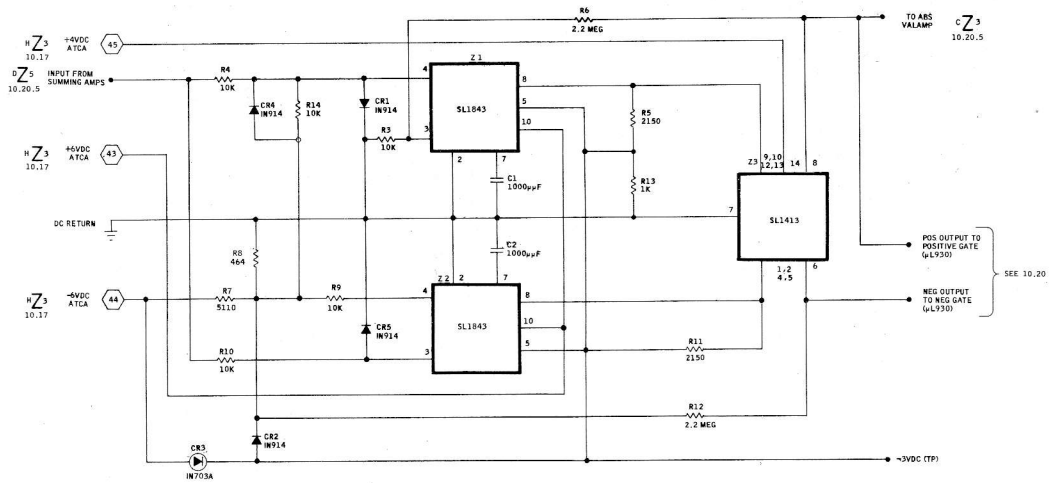

NOTES: UNLESS OTHERWISE SPECIFIED
1. ALL RESISTANCE VALUES ARE IN OHMS.

DETECTOR
ZERO CROSSING
0.4 VOLT
REF.

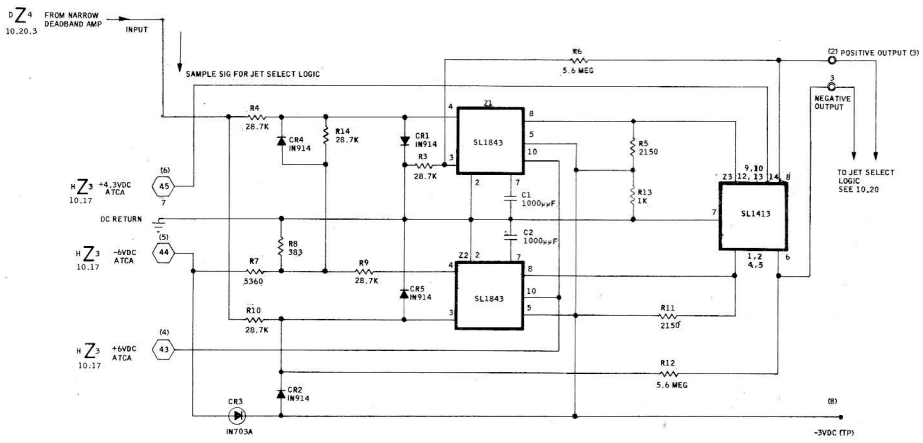

NOTE:
UNLESS OTHERWISE SPECIFIED
1. ALL RESISTANCE VALUES ARE IN OHMS

20.6 DETECT

SIGNATURES	DATE
DR	
DSGN	
QC	
ENGR	
APP	
FEC	
AUTH	

NATIONAL AERONAUTICS & SPACE ADMINISTRATION
MANNED SPACECRAFT CENTER - HOUSTON, TEXAS

DETECTORS

LM
LM-3

SIZE J

DWG NO. 10.20.6

30X40

PAGE 10-33 SHEET 1 OF 1

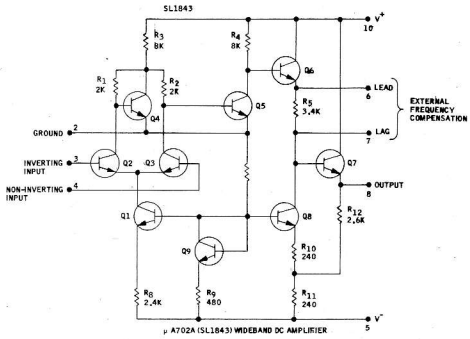

μ A702A (SL1843) WIDEBAND DC AMPLIFIER

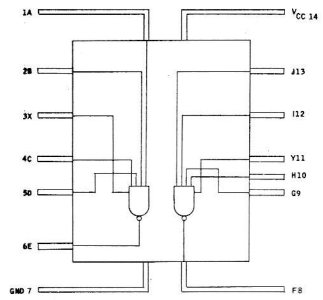

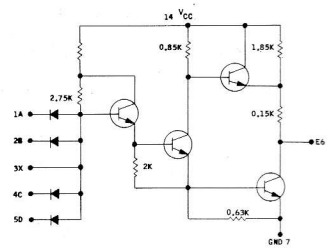

DTμL 932 (SL1888) DUAL FOUR INPUT GATE

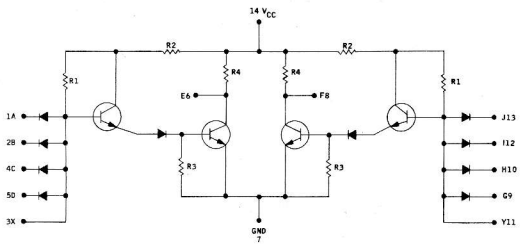

TYPICAL RESISTOR VALUES
R_1 2.0KΩ
R_2 1.75KΩ
R_3 5.00KΩ
R_4 6.00KΩ

LOGIC ELEMENT DTμL-930

A	B	C	D	E
1	1	1	1	0
0	1	1	1	1
1	0	1	1	1
0	0	0	0	1

POSITIVE (NAND) LOGIC

A	B	C	D	E
0	0	0	0	1
1	0	0	0	0
0	1	0	0	0
1	1	1	1	0

NEGATIVE (NOR) LOGIC

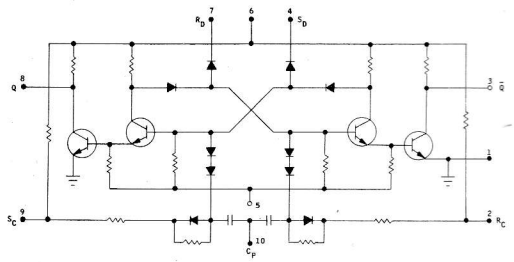

SE124 (SL1886) DTL B_1 STABLE MULTIBRATOR

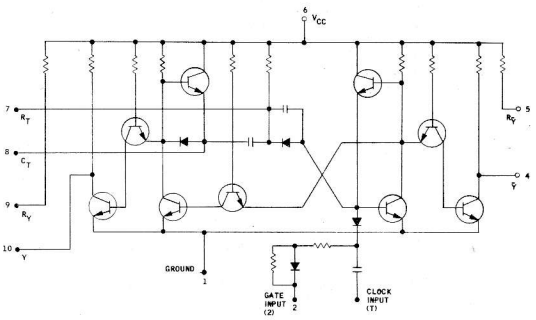

SE 161G - DTL MONOSTABLE MULTIVIBRATOR

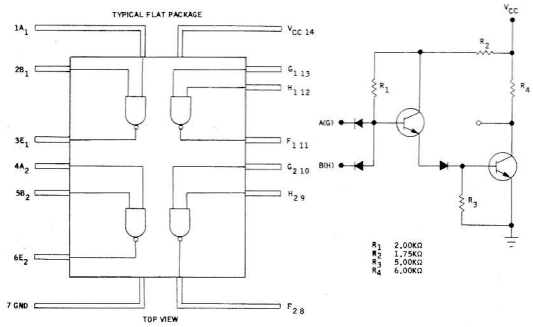

R_1 2.00KΩ
R_2 1.75KΩ
R_3 5.00KΩ
R_4 6.00KΩ

DTμL946 (SL1842) QUAD TWO INPUT GATE

20.7 LOGIC

NATIONAL AERONAUTICS & SPACE ADMINISTRATION MANNED SPACECRAFT CENTER - HOUSTON, TEXAS	SIGNATURES	DATE
LOGIC ELEMENTS	DR Tony Nicholson	11-20
	DSGR G. T. Bennett	3-27-61
	QC Philip O. Wilson Jr.	4-24-61
	ENGR Richard Stamm	5-2-61
	APP A. J. Calio	4-3-61
	FEC [illegible]	4-4-61
	AUTH Sam Mancuso	4-8-61

DWG NO.	SIZE	
10.20.7	LM	LM-3
SHEET 1 OF 1	PAGE 10-34	30 X 40

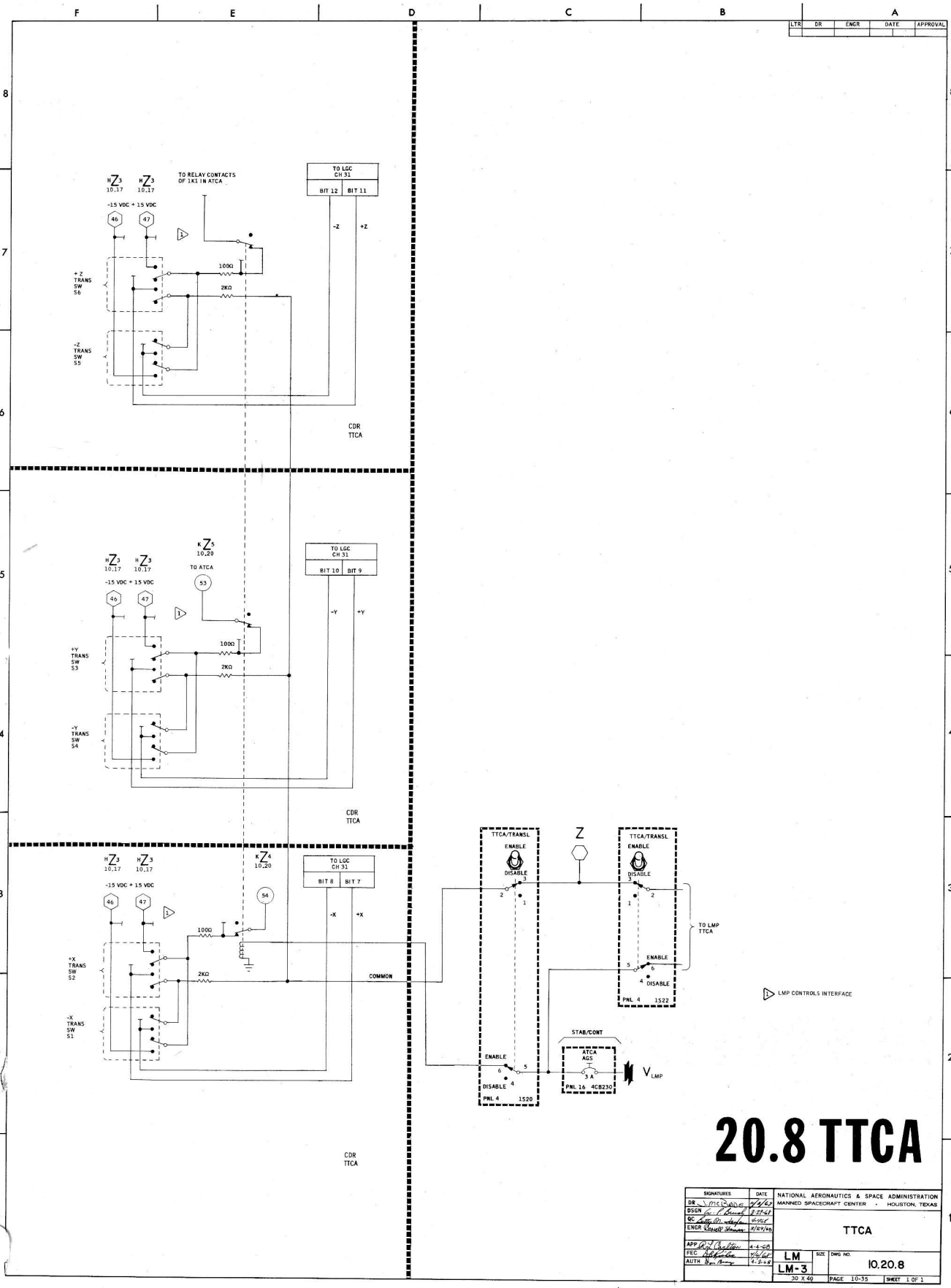

20.8 TTCA

SIGNATURES	DATE
DR J. McCabe	4/8/68
DSGN G. Brunk	3-27-68
QC Betty D. Hyde	4-10-68
ENGR Donald Hanes	3/29/68
APP R. J. Collier	4-4-68
FEC [illegible]	4/4/68
AUTH [illegible]	4-5-68

NATIONAL AERONAUTICS & SPACE ADMINISTRATION
MANNED SPACECRAFT CENTER - HOUSTON, TEXAS

TTCA

LM
LM-3

SIZE: 30 X 40

DWG NO. 10.20.8

PAGE 10-35

SHEET 1 OF 1

LTR	ENGR		DATE	APPROVAL

DRIVER, RELAY

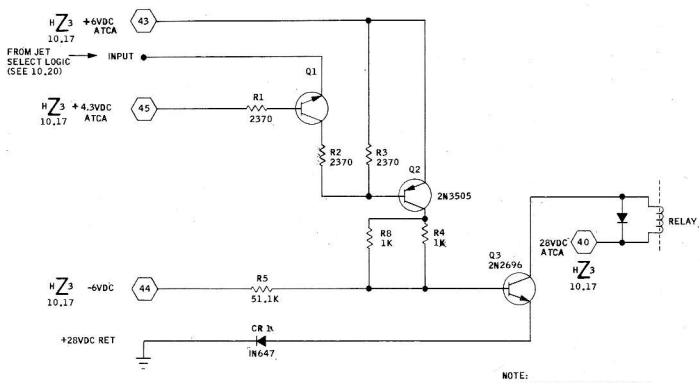

NOTE:
UNLESS OTHERWISE SPECIFIED
ALL RESISTANCE VALUES ARE IN OHMS

DRIVER SOLENOID

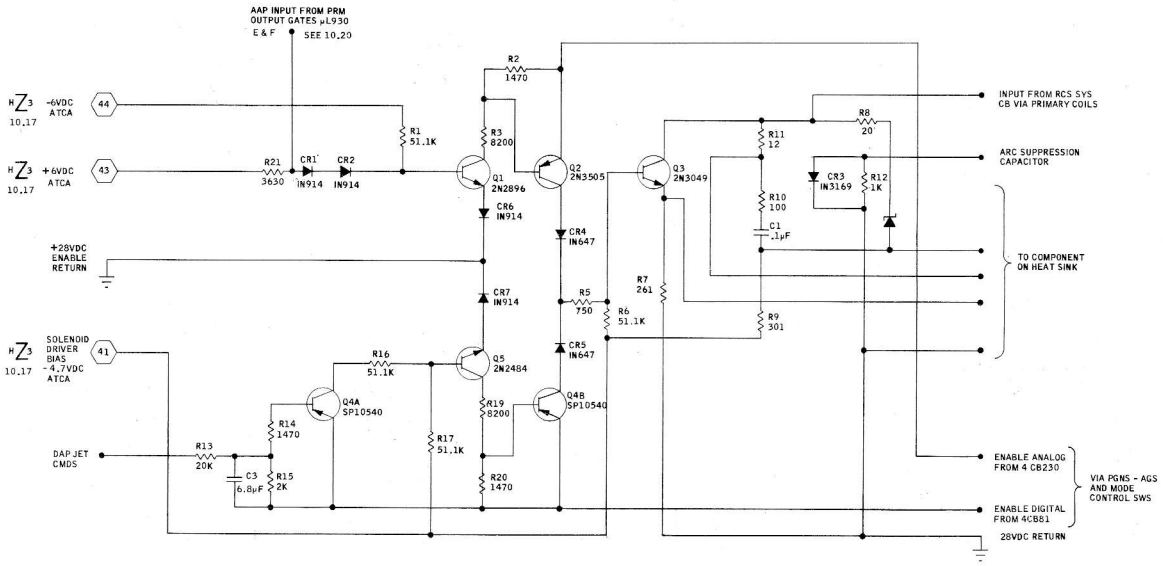

NOTE:
UNLESS OTHERWISE SPECIFIED
ALL RESISTANCE VALUES ARE IN OHMS

20.9 DRIVERS

NATIONAL AERONAUTICS & SPACE ADMINISTRATION MANNED SPACECRAFT CENTER · HOUSTON, TEXAS	SIGNATURES	DATE
	DR	11-3-67
	DSGN	3-27-68
	QC	3-27-68
	ENGR	3-27-68
	APP	4-3-68
	FEC	4-4-68
	AUTH	4-8-68

DRIVERS

DWG NO.	SIZE	
10.20.9		LM
		LM-3
SHEET 1 OF 1	PAGE 10-36	25.5 X 30

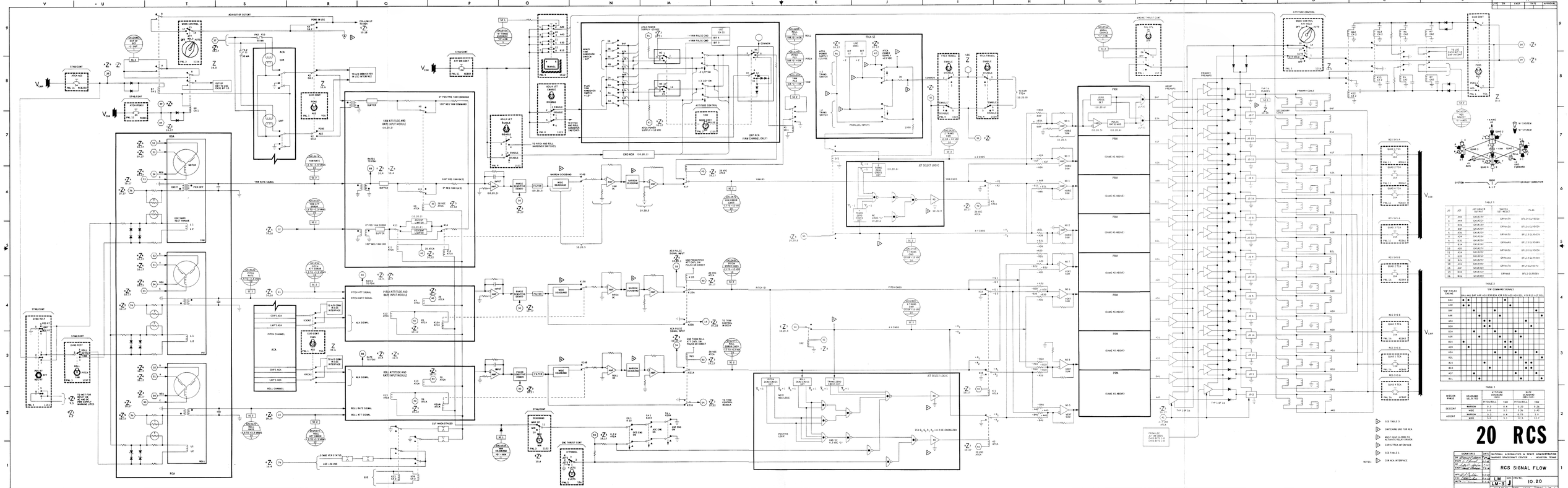
20 RCS
RCS SIGNAL FLOW
LM-SJ
NATIONAL AERONAUTICS & SPACE ADMINISTRATION
MANNED SPACECRAFT CENTER - HOUSTON, TEXAS
10.20
ACA OUT OF DETENT
PGNS IN USE
FOLLOW UP
+Z1
10.18
ACA
COR
LAM
TO A/D CONVERTER IN LGC INTERFACE
OUT OF DET TO LGC CMPTR BIT 9
GUID CONT
PGNS
AGS
ATTITUDE CONTROL
MODE CONTROL
AUTO
ATT/TRANS
RATE CMD
OFF
PRI
VERN
ATT/TRANS
RATE CMD
ACCEL CMD
ATT HOLD
SCS
ATT CONT

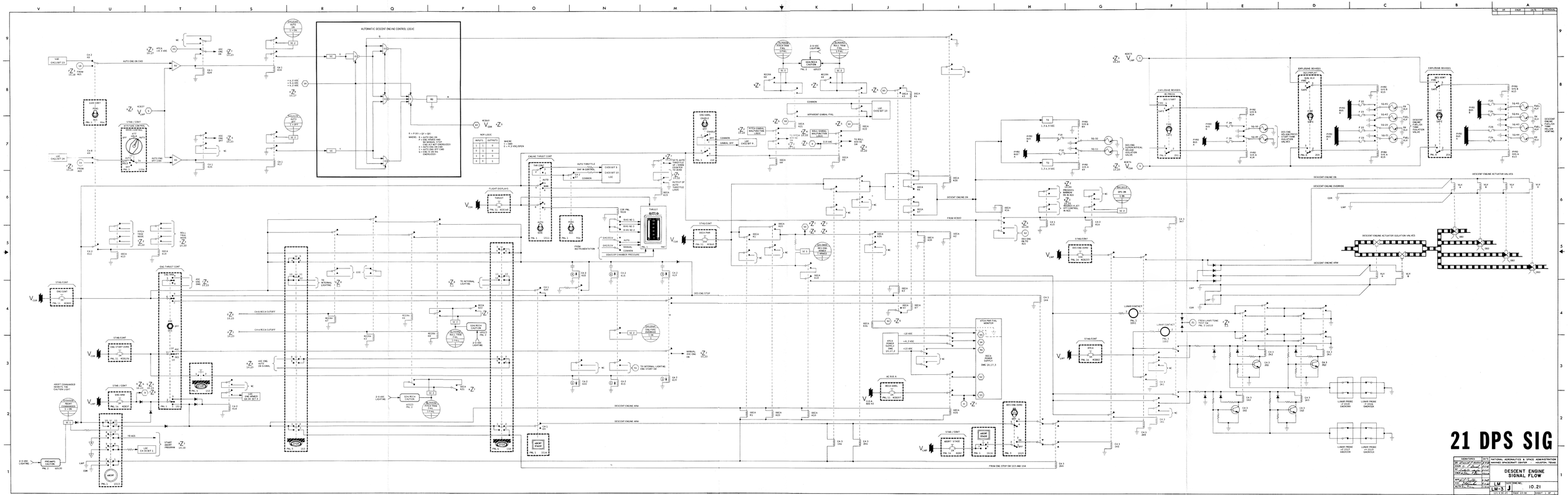
AUTOMATIC DESCENT ENGINE CONTROL LOGIC
21 DPS SIG
DESCENT ENGINE SIGNAL FLOW
NATIONAL AERONAUTICS & SPACE ADMINISTRATION
MANNED SPACECRAFT CENTER
HOUSTON, TEXAS
LM
LM-3
J
10.21
SHEET 1 OF 1
DESCENT ENGINE ON
DESCENT ENGINE OVERRIDE
DESCENT ENGINE ARM
DESCENT ENGINE ACTUATOR SOLENOID VALVES
DESCENT ENGINE SUPERCRITICAL HELIUM PRESS ISOLATION VALVES
DESCENT ENGINE PROPELLANT TANK ISOLATION VALVES
EXPLOSIVE DEVICES
DES ENG OVRD
DES ENG STOP
ABORT COMMANDED INHIBITS THE CAUTION LIGHT
FROM ACS90
FROM ACS91
FROM ENG STOP SW 113 AND 114
TO INTERNAL LIGHTING
TO INTERNAL LIGHTING ENG START SW
TO ROLL ACS SEC
TO PITCH ACS SEC
TO YAW ACS SEC
ENG THRUST CONT
ENG START CONT
STAB/CONT
ATTITUDE CONTROL MODE CONTROL
ATTITUDE CONTROL MODE SELECTOR
ENGINE THRUST CONT
AUTO THROTTLE DAP IN CONTROL
THRUST CONTROL
FLIGHT DISPLAYS
ENGINE START PROGRAM
ABORT STAGE
ABORT GAUGE
ABORT STAGE / CONT
ENG ARMED
ENG START CONT
ENG ARM
ENG START SW
ENG ARMED SW 30 & 31
ENG ARMED SW 32 & 33
ENG ARMED SW 34 & 35
ENG ARMED SW 36 & 37
ENG ARMED SW 38 & 39
ENG ARMED SW 40 & 41
ENG ARMED SW

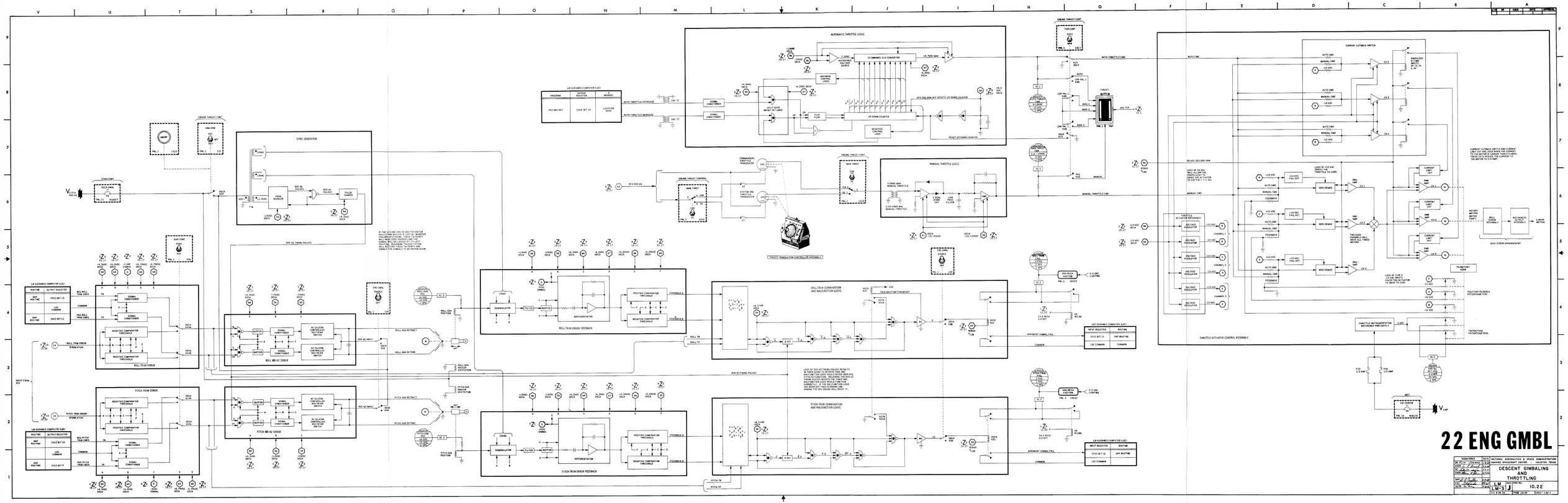
22 ENG GMBL
DESCENT GIMBALING AND THROTTLING
10.22
LM-3J
AUTOMATIC THROTTLE LOGIC
MANUAL THROTTLE LOGIC
SYNC GENERATOR
ROLL TRIM ERROR
PITCH TRIM ERROR
ROLL 400 HZ ERROR
PITCH 400 HZ ERROR
ROLL TRIM ERROR FEEDBACK
PITCH TRIM ERROR FEEDBACK
ROLL TRIM COMBINATION AND MALFUNCTION LOGIC
PITCH TRIM COMBINATION AND MALFUNCTION LOGIC
CURRENT CUTBACK SWITCH
THROTTLE ACTUATOR CONTROL ASSEMBLY
THRUST TRANSLATION CONTROLLER ASSEMBLY
LM GUIDANCE COMPUTER (LGC)
ROUTINE
OUTPUT REGISTER
SAP ROUTINE
CH12 BIT 13
LGC COMMON
CH12 BIT 11
ROLL TRIM ERROR FROM RTCA
PITCH TRIM ERROR FROM RTCA
ROLL PITCH TRIM CMDS
COMMON
PRO ROLL TRIM CMD
PRO PITCH TRIM CMD
SAP ROUTINE
CH12 BIT 10
CH12 BIT 9
AUTO THROTTLE INCREASE
AUTO THROTTLE DECREASE
CH11 T5
CH11 T6
ENGINE THRUST CONT
ENG ARM
ABORT
ABORT STAGE
SYNC CONT
DESCENT ENGINE CONTROL ASSEMBLY
ENGINE THRUST CONTROL
MAIN THROT
VERNIER THROT
ENG CMD
PUSH ABORT
ABORT STAGE
ENG ON CAUTION
ENG MFCA CAUTION
ENG GMBL TRANSF CAUTION
ENG GMBL TRANSF CAUTION LIGHT
ENG GMBL CAUTION LIGHT
ENG MFCA CAUTION LIGHT
ENG ON CAUTION LIGHT
ENGINE GMBL FAIL
ENGINE MFCA FAIL
ENGINE GMBL TRANSF FAIL
APPARENT GIMBAL FAIL
COMMON
ENGINE GMBL TRANSF CAUTION LIGHT
ENGINE MFCA CAUTION LIGHT
ENGINE ON CAUTION LIGHT
ENGINE GMBL FAIL
ENGINE MFCA FAIL
ENGINE GMBL TRANSF FAIL
APPARENT GIMBAL FAIL
COMMON
LGC GUIDANCE COMPUTER (LGC)
INPUT REGISTER
ROUTINE
CH32 BIT 16
SAP ROUTINE
LGC COMMON
COMMON
CH32 BIT 15
LGC GUIDANCE COMPUTER (LGC)
PROGRAM
OUTPUT REGISTER
MEMORY
P40 AND P47
CH34 BIT 14
LOCATION 0035
AUTO THROTTLE CMD
MANUAL THROTTLE CMD
MANUAL CMD
AUTO CMD
28 VDC DES ENG ARM
LOSS OF 28 VDC WILL ALLOW THE PROPELLANT TO FLOW TO THE ENGINE TO DESTROY IT (10 TO 14 SEC)
LOSS OF +22 VDC WILL DRIVE THROTTLE TO LOW
LOSS OF 2 OR 3 +15 VDC WILL DRIVE ACTUATOR TO ZERO THRUST
LOSS OF ONE +15 VDC WILL HAVE NO EFFECT
CURRENT CUTBACK SWITCH AND CURRENT LIMITER WILL LIMIT THE CURRENT TO THE MOTOR TO LESS THAN 4.9 AMPS. THESE UNITS REDUCE THE CURRENT TO THE MOTOR TO 2.9 AMPS
IF THE 120 KHZ AND 400 HZ EXCITATION FOR RESOLVER#1 FAILS TO LOST RV INVERTER #1 OR BOTH, THE 400 HZ ERROR SIGNAL WILL BE LOST RESULTING IN A LOSS OF ROLL AND PITCH TRIM CONTROL. REGARDING THE EXCITATION FOR RESOLVER#2, THE ENGINE WILL BE UNABLE TO GIMBAL TO BE DRIVEN AGAIN.
LOSS OF 800 HZ TIMING PULSES RESULTS IN TIMER SIGNALS TO INITIATE TIMER, MALFUNCTION LOGIC WOULD NEVER INDICATE THAT THE TIMER HAD TIMED OUT. LOSS OF TIMING PULSES RESETS THE TIMER AND MALFUNCTION LOGIC WOULD INDICATE MALFUNCTION AFTER 1.5 SECONDS. THE LOSS OF 800 HZ TIMING PULSES WOULD ALSO DISABLE ROLL RESET (P).
800 HZ TIMING PULSES
400 HZ INPUT
ROLL GDA EXTEND
ROLL GDA RETRACT
PITCH GDA EXTEND
PITCH GDA RETRACT
ROLL GDA POSITION
PITCH GDA POSITION
ROLL GDA RESOLVER EXCITATION
PITCH GDA RESOLVER EXCITATION
ROLL TM
ROLL TP
PITCH TM
PITCH TP
INPUT FROM RCS
ROLL TRIM ERROR FROM RTCA
PITCH TRIM ERROR FROM RTCA
ROLL TRIM ERROR
PITCH TRIM ERROR
ROLL 400 HZ ERROR
PITCH 400 HZ ERROR
ROLL TRIM ERROR FEEDBACK
PITCH TRIM ERROR FEEDBACK
ROLL TRIM COMBINATION AND MALFUNCTION LOGIC
PITCH TRIM COMBINATION AND MALFUNCTION LOGIC
TRIM MALFUNCTION RESET
SYNC GENERATOR
SYNC SIGNAL
800 HZ PULSES
PULSE SHAPER
FREQ DOUBLER
120 KHZ
400 HZ
800 HZ TIMING PULSES
ENGINE THRUST CONTROL
MAIN THROT
VERNIER THROT
CONDENSERS AND PRESS TRANSDUCER
SYSTEM ENG AND PRESS TRANSDUCER
MANUAL THROTTLE LOGIC
5 VDMS MAX MANUAL THROTTLE
5.25 VDMS MIN MANUAL THROTTLE
LOW PASS FILTER
AUTOMATIC THROTTLE LOGIC
SIGNAL CONDITIONER
MAXIMUM CONTROL LIMIT
7.2VDC REFERENCE VOLTAGE SOURCE
12 OMNIBIT, D/A CONVERTER
+5.7VDC MAX
SPLIT OVER WEIGHT BIT LATCH
FLIP FLOP
UP-DOWN COUNTER
DES ENG ARM OFF RESETS UP/DOWN COUNTER
NEGATIVE CONTROL LIMIT
RESET UP/DOWN COUNTER
THRUST TRANSLATION CONTROLLER ASSEMBLY
THRUST 9470 LB
CDR PNL 2 41R
CDR PNL 2 42R
DECA #2 A2A1
DECA #2 A2A2
DECA #2 A2A3
DECA #2 A2A4
DECA #2 A2A5
DECA #2 A2A6
DECA #2 A2A7
DECA #2 A2A8
DECA #2 A2A9
DECA #2 A2A10
DECA #2 A2A11
DECA #2 A2A12
DECA #2 A2A13
DECA #2

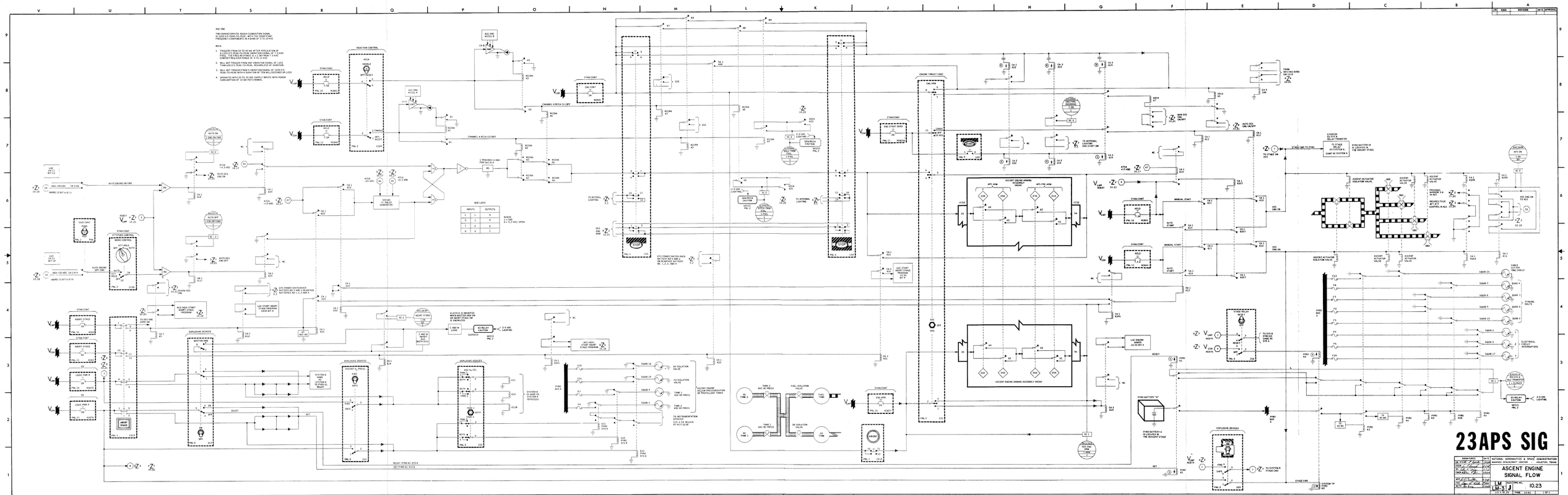
ASC ENG
THE CHARACTERISTIC ROUGH-COMBUSTION SIGNAL IS 2200 P-P PEAK-TO-PEAK, WITH THE SIGNIFICANT FREQUENCY COMPONENTS IN A BAND OF 5 TO 25 KHZ
RCCA
1. TRIGGERS FROM 20 TO 40 MS AFTER APPLICATION OF A 2200 P-P PEAK-TO-PEAK VIBRATION SIGNAL OF 7.5 RMS G'S AT 14 HZ WITH A SWEEP RATE OF 2 OCTAVES PER MINUTE CENTER FREQUENCY RANGE OF 5 TO 25 KHZ
2. WILL NOT TRIGGER FROM ANY VIBRATION SIGNAL OF LESS THAN 600 G'S PEAK-TO-PEAK, REGARDLESS OF DURATION
3. WILL NOT TRIGGER FROM A VIBRATION SIGNAL OF 1500 P-P PEAK-TO-PEAK APPLIED FOR 10 MS OR LESS AT 14 MILLISECONDS OR LESS
4. OPERATES WITH 22 TO 34 VDC SUPPLY INPUTS WITH POWER CONSUMPTION OF 15 MA PER CHANNEL
REACTION CONTROL
ENABLE
APS RESET
ENABLE
DISABLE
ASC ENG ACCELS
STAG/CONT
ENG CONT
ENG STOP
ENGINE THRUST CONT
ENG STOP
ENG START (NOR)
ENG START (EMER)
ENGINE ARMING ASSEMBLY (EAM) OVERRIDE
ENGINE ARMING ASSEMBLY (EAM)
APS PRE-HTR
APS HTR
ASCENT ENGINE ARMING ASSEMBLY (AEAM)
ASCENT ENGINE ARMING ASSEMBLY (AEAM)
MAN ENG SHUT OFF
AUTO SEQ ENG ON/OFF
AUTO ENGINE ON CMD
AUTO ENGINE OFF CMD
ATTITUDE CONTROL MODE CONTROL
ATT HOLD
AUTO
CSM
ATT HOLD
AUTO
CSM
AUTO OFF
AUTO ON
AUTO OFF
AUTO ON
AUTO DES ENG OFF
AUTO DES ENG OFF
AUTO ENGINE OFF CMD
AUTO ENGINE ON CMD
EPS POWER SWITCHOVER BATTERIES NO. 1, 2, AND 4 TO BATTERIES NO. 1, 2, AND 3
EPS POWER SWITCHOVER BATTERIES NO. 1, 2, AND 3 TO BATTERIES NO. 1, 2, AND 4
LGC START ASCENT STAGE PROGRAM CA3 B37 #1
ASC HEAT START ASCENT STAGE PROGRAM
ASC HEAT START ASCENT STAGE PROGRAM
ASCENT STAGE
DESCENT STAGE
LOGIC
ASCENT STAGE
DESCENT STAGE
LOGIC
LOGIC
LOGIC
EXPLOSIVE DEVICES
EXPLOSIVE DEVICES
EXPLOSIVE DEVICES
EXPLOSIVE DEVICES
ARM
SAFE
FIRE
ARM
SAFE
FIRE
ARM
SAFE
FIRE
ARM
SAFE
FIRE
ASCENT STAGE
DESCENT STAGE
LOGIC
LOGIC
RESET
SET
RESET PYRO A1 SYS A
SET PYRO A1 SYS A
SYSTEM A ARM AND FIRE RELAY
SYSTEM B ARM AND FIRE RELAY
SYSTEM A (DESCENT STAGE) OR SYSTEM B (ASCENT STAGE)
SYSTEM A (DESCENT STAGE) OR SYSTEM B (ASCENT STAGE)
ASC ENG ACCELS B
ASC ENG ACCELS A
CHANNEL B RCCA CUTOFF
CHANNEL A RCCA CUTOFF
3 PROCEED A GNO FOR CA2 E2 X
3 PROCEED A GNO FOR CA2 E2 X
RCCA
RCCA
RCCA

LM AGS INITIALIZATION/UPDATE

WORD NUMBER	FIRST REGISTER	SECOND REGISTER
1	DOWNLIST ID	SYNC BITS (77340-OCTAL)
2	LM X POSITION	GARBAGE
3	LM Y POSITION	GARBAGE
4	LM Z POSITION	GARBAGE
5	LM EPOCH TIME MSB	GARBAGE
6	LM X VELOCITY	GARBAGE
7	LM Y VELOCITY	GARBAGE
8	LM Z VELOCITY	GARBAGE
9	LM EPOCH TIME LSB	GARBAGE
10	CM X POSITION CAL BY LM	GARBAGE
11	CM Y POSITION CAL BY LM	GARBAGE
12	CM Z POSITION CAL BY LM	GARBAGE
13	CM EPOCH TIME MSB CAL BY LM	GARBAGE
14	CM X VELOCITY CAL BY LM	GARBAGE
15	CM Y VELOCITY CAL BY LM	GARBAGE
16	CM Z VELOCITY CAL BY LM	GARBAGE
17	CM EPOCH TIME LSB CAL BY LM	GARBAGE
18	COMPNUMB	UPOLDMOD
19	UPVERB	UPCOUNT
20	UPBUFF+0	UPBUFF+1
21	UPBUFF+2	UPBUFF+3
22	UPBUFF+4	UPBUFF+5
23	UPBUFF+6	UPBUFF+7
24	UPBUFF+8D	UPBUFF+9D
25	UPBUFF+10D	UPBUFF+11D
26	UPBUFF+12D	UPBUFF+13D
27	UPBUFF+14D	UPBUFF+15D
28	UPBUFF+16D	UPBUFF+17D
29	UPBUFF+18D	UPBUFF+19D
30	SPARE	SPARE
31	SPARE	SPARE
32	SPARE	SPARE
33	K FACTOR MSB	K FACTOR LSB
34	LM CURRENT WEIGHT MSB	LM CURRENT WEIGHT LSB
35	RSBBQ	RSBBQ+1
36	RR CDU SHAFT	ACTUAL PIPA X
37	ACTUAL PIPA Y	ACTUAL PIPA Z
38	ACTUAL CDU X	ACUTAL CDU Y
39	ACTUAL CDU Z	RR CDU TRUNNION
40	FLAGWORD 0	FLAGWORD 1
41	FLAGWORD 2	FLAGWORD 3
42	FLAGWORD 4	FLAGWORD 5
43	FLAGWORD 6	FLAGWORD 7
44	FLAGWORD 8D	FLAGWORD 9D
45	DSPTAB +0	DSPTAB +1
46	DSPTAB +2	DSPTAB +3
47	DSPTAB +4	DSPTAB +5
48	DSPTAB +6	DSPTAB +7
49	DSPTAB +8D	DSPTAB +9D
50	DSPTAB +10D	DSPTAB +11D

LM AGS INITIALIZATION/UPDATE - CONTINUED

WORD NUMBER	FIRST REGISTER	SECOND REGISTER
51	TIME 2	TIME 1
52	LAT CAL LM ST VEC X POS MSB	LAT CAL LM ST VEC X POS LSB
53	LAT CAL LM ST VEC Y POS MSB	LAT CAL LM ST VEC Y POS LSB
54	LAT CAL LM ST VEC Z POS MSB	LAT CAL LM ST VEC Z POS LSB
55	LAT CAL LM ST VEC X VEL MSB	LAT CAL LM ST VEC X VEL LSB
56	LAT CAL LM ST VEC Y VEL MSB	LAT CAL LM ST VEC Y VEL LSB
57	LAT CAL LM ST VEC Z VEL MSB	LAT CAL LM ST VEC Z VEL LSB
58	STATE VECTOR TIME MSB	STATE VECTOR TIME LSB
59	GARBAGE	DESIRED CDU X INTERMED
60	DESIRED CDU Y INTERMED	DESIRED CDU Z INTERMED
61	BODY RATE (P)	BODY RATE (Q)
62	BODY RATE (R)	GARBAGE
63	SPARE	SPARE
64	REDO CNTR	DESIRED CDU X FINAL
65	DESIRED CDU Y FINAL	DESIRED CDU Z FINAL
66	SPARE	SPARE
67	SPARE	SPARE
68	COMPNUMB	UPOLDMOD
69	UPVERB	UPCOUNT
70	UPBUFF+0	UPBUFF+1
71	UPBUFF+2	UPBUFF+3
72	UPBUFF+4	UPBUFF+5
73	UPBUFF+6	UPBUFF+7
74	UPBUFF+8D	UPBUFF+9D
75	UPBUFF+10D	UPBUFF+11D
76	UPBUFF+12D	UPBUFF+13D
77	UPBUFF+14D	UPBUFF+15D
78	UPBUFF+16D	UPBUFF+17D
79	UPBUFF+18D	UPBUFF+19D
80	SPARE	SPARE
81	SPARE	SPARE
82	SPARE	SPARE
83	RADMODES	DAPBOOLS
84	SUMRATE (Q)	SUMRATE (R)
85	CADRFLSH	CADRFLSH+1
86	CADRFLSH+2	FAILREG
87	FAILREG +1	FAILREG +2
88	ACTUAL CDU X	ACTUAL CDU Y
89	ACTUAL CDU Z	RR CDU TRUNNION
90	IMODES 30	IMODES 33
91	CHANNEL 11	CHANNEL 12
92	CHANNEL 13	CHANNEL 14
93	CHANNEL 30	CHANNEL 31
94	CHANNEL 32	CHANNEL 33
95	DSPTAB +0	DSPTAB +1
96	DSPTAB +2	DSPTAB +3
97	DSPTAB +4	DSPTAB +5
98	DSPTAB +6	DSPTAB +7
99	DSPTAB +8D	DSPTAB +9D
100	DSPTAB +10D	DSPTAB +11D

LM POWERED

WORD NUMBER	FIRST REGISTER	SECOND REGISTER
1	DOWNLIST I.D.	SYNC BITS (77340-OCTAL)
2	LAT CAL CM ST VEC X POS MSB	LAT CAL CM ST VEC X POS LSB
3	LAT CAL CM ST VEC Y POS MSB	LAT CAL CM ST VEC Y POS LSB
4	LAT CAL CM ST VEC Z POS MSB	LAT CAL CM ST VEC Z POS LSB
5	LAT CAL CM ST VEC X VEL MSB	LAT CAL CM ST VEC X VEL LSB
6	LAT CAL CM ST VEC Y VEL MSB	LAT CAL CM ST VEC Y VEL LSB
7	LAT CAL CM ST VEC Z VEL MSB	LAT CAL CM ST VEC Z VEL LSB
8	STATE VECTOR TIME MSB	STATE VECTOR TIME LSB
9	GARBAGE	DESIRED CDU X INTERMED
10	DESIRED CDU Y INTERMED	DESIRED CDU Z INTERMED
11	BODY RATE (P)	BODY RATE (Q)
12	BODY RATE (R)	GARBAGE
13	RR TRUNNION ERROR	RR SHAFT ERROR
14	LR VEL X (RAW DATA)	LR VEL Y (RAW DATA)
15	LR VEL Z (RAW DATA)	LR RANGE (RAW DATA)
16	TIME OF EVENT MSB	TIME OF EVENT LSB
17	RR RANGE (RAW DATA)	RR RANGE RATE (RAW DATA)
18	REFSMMAT ROW 1 COL 1 MSB	REFSMMAT ROW 1 COL 1 LSB
19	REFSMMAT ROW 1 COL 2 MSB	REFSMMAT ROW 1 COL 2 LSB
20	REFSMMAT ROW 1 COL 3 MSB	REFSMMAT ROW 1 COL 3 LSB
21	REFSMMAT ROW 2 COL 1 MSB	REFSMMAT ROW 2 COL 1 LSB
22	REFSMMAT ROW 2 COL 2 MSB	REFSMMAT ROW 2 COL 2 LSB
23	REFSMMAT ROW 2 COL 3 MSB	REFSMMAT ROW 2 COL 3 LSB
24	GDT/2 X MSB	GDT/2 X LSB
25	GDT/2 Y MSB	GDT/2 Y LSB
26	GDT/2 Z MSB	GDT/2 Z LSB
27	REDO CNTR	DESIRED CDU X FINAL
28	DESIRED CDU Y FINAL	DESIRED CDU Z FINAL
29	OMEGADP	OMEGADQ
30	OMEGADR	GARBAGE
31	VRPREV X MSB	VRPREV X LSB
32	VRPREV Y MSB	VRPREV Y LSB
33	VRPREV Z MSB	VRPREV Z LSB
34	LM CURRENT WEIGHT MSB	LM CURRENT WEIGHT LSB
35	RSBBQ	RSBBQ+1
36	RR CDU SHAFT	ACTUAL PIPA X
37	ACTUAL PIPA Y	ACTUAL PIPA Z
38	ACTUAL CDU X	ACTUAL CDU Y
39	ACTUAL CDU Z	RR CDU TRUNNION
40	FLAGWORD 0	FLAGWORD 1
41	FLAGWORD 2	FLAGWORD 3
42	FLAGWORD 4	FLAGWORD 5
43	FLAGWORD 6	FLAGWORD 7
44	FLAGWORD 8D	FLAGWORD 9D
45	DSPTAB +0	DSPTAB +1
46	DSPTAB +2	DSPTAB +3
47	DSPTAB +4	DSPTAB +5
48	DSPTAB +6	DSPTAB +7
49	DSPTAB +8D	DSPTAB +9D
50	DSPTAB +10D	DSPTAB +11D

LM POWERED - CONTINUED

WORD NUMBER	FIRST REGISTER	SECOND REGISTER
51	TIME 2	TIME 1
52	LAT CAL LM ST VEC X POS MSB	LAT CAL LM ST VEC X POS LSB
53	LAT CAL LM ST VEC Y POS MSB	LAT CAL LM ST VEC Y POS LSB
54	LAT CAL LM ST VEC Z POS MSB	LAT CAL LM ST VEC Z POS LSB
55	LAT CAL LM ST VEC X VEL MSB	LAT CAL LM ST VEC X VEL LSB
56	LAT CAL LM ST VEC Y VEL MSB	LAT CAL LM ST VEC Y VEL LSB
57	LAT CAL LM ST VEC Z VEL MSB	LAT CAL LM ST VEC Z VEL LSB
58	STATE VECTOR TIME MSB	STATE VECTOR TIME LSB
59	GARBAGE	DESIRED CDU X INTERMED
60	DESIRED CDU Y INTERMED	DESIRED CDU Z INTERMED
61	BODY RATE (P)	BODY RATE (Q)
62	BODY RATE (R)	GARBAGE
63	RR TRUNNION ERROR	RR SHAFT ERROR
64	LR VEL X (RAW DATA)	LR VEL Y (RAW DATA)
65	LR VEL Z (RAW DATA)	LR RANGE (RAW DATA)
66	TIGN MSB	TIGN LSB
67	VGX MSB	VGX LSB
68	VGY MSB	VGY LSB
69	VGZ MSB	VGZ LSB
70	CENTRAL ANGLE MSB	CENTRAL ANGLE LSB
71	PIPTIME 1 MSB	PIPTIME 1 LSB
72	DELV X MSB	DELV X LSB
73	DELV Y MSB	DELV Y LSB
74	DELV Z MSB	DELV Z LSB
75	TGO MSB	TGO LSB
76	COMMANDS TO DECA MSB	COMMANDS TO DECA LSB
77	TPI TIME MSB	TPI TIME LSB
78	TPI DELTA VEL X MSB	TPI DELTA VEL X LSB
79	TPI DELTA VEL Y MSB	TPI DELTA VEL Y LSB
80	TPI DELTA VEL Z MSB	TPI DELTA VEL Z LSB
81	ELEVATION ANGLE MSB	ELEVATION ANGLE LSB
82	TPF TIME MSB	TPF TIME LSB
83	RADMODES	DAPBOOLS
84	MOMENT OFFSET (Q)	MOMENT OFFSET (R)
85	CADRFLSH	CADRFLSH +1
86	CADRFLSH +2	FAILREG
87	FAILREG +1	FAILREG +2
88	ACTUAL CDU X	ACTUAL CDU Y
89	ACTUAL CDU Z	RR CDU TRUNNION
90	IMODES 30	IMODES 33
91	CHANNEL 11	CHANNEL 12
92	CHANNEL 13	CHANNEL 14
93	CHANNEL 30	CHANNEL 31
94	CHANNEL 32	CHANNEL 33
95	DSPTAB +0	DSPTAB +1
96	DSPTAB +2	DSPTAB +3
97	DSPTAB +4	DSPTAB +5
98	DSPTAB +6	DSPTAB +7
99	DSPTAB +8D	DSPTAB +9D
100	DSPTAB +10D	DSPTAB +11D

LM COAST AND ALIGN

WORD NUMBER	FIRST REGISTER	SECOND REGISTER
1	DOWNLIST I.D.	SYNC BITS (77340-OCTAL)
2	LAT CAL CM ST VEC X POS MSB	LAT CAL CM ST VEC X POS LSB
3	LAT CAL CM ST VEC Y POS MSB	LAT CAL CM ST VEC Y POS LSB
4	LAT CAL CM ST VEC Z POS MSB	LAT CAL CM ST VEC Z POS LSB
5	LAT CAL CM ST VEC X VEL MSB	LAT CAL CM ST VEC X VEL LSB
6	LAT CAL CM ST VEC Y VEL MSB	LAT CAL CM ST VEC Y VEL LSB
7	LAT CAL CM ST VEC Z VEL MSB	LAT CAL CM ST VEC Z VEL LSB
8	STATE VECTOR TIME MSB	STATE VECTOR TIME LSB
9	GARBAGE	DESIRED CDU X INTERMED
10	DESIRED CDU Y INTERMED	DESIRED CDU Z INTERMED
11	BODY RATE (P)	BODY RATE (Q)
12	BODY RATE (R)	GARBAGE
13	RR TURNNION ERROR	RR SHAFT ERROR
14	LR VEL X (RAW DATA)	LR VEL Y (RAW DATA)
15	LR VEL Z (RAW DATA)	LR RANGE (RAW DATA)
16	TIME OF EVENT MSB	TIME OF EVENT LSB
17	RR RANGE (RAW DATA)	RR RANGE RATE (RAW DATA)
18	REFSMMAT ROW 1 COL 1 MSB	REFSMMAT ROW 1 COL 1 LSB
19	REFSMMAT ROW 1 COL 2 MSB	REFSMMAT ROW 1 COL 2 LSB
20	REFSMMAT ROW 1 COL 3 MSB	REFSMMAT ROW 1 COL 3 LSB
21	REFSMMAT ROW 2 COL 1 MSB	REFSMMAT ROW 2 COL 1 LSB
22	REFSMMAT ROW 2 COL 2 MSB	REFSMMAT ROW 2 COL 2 LSB
23	REFSMMAT ROW 2 COL 3 MSB	REFSMMAT ROW 2 COL 3 LSB
24	STARAD +0	STARAD +1
25	STARAD +2	STARAD +3
26	STARAD +4	STARAD +5
27	STARAD +6	STARAD +7
28	STARAD +8D	STARAD +9D
29	STARAD +10D	STARAD +11D
30	STARAD +12D	STARAD +13D
31	STARAD +14D	STARAD +15D
32	STARAD +16D	STARAD +17D
33	K FACTOR MSB	K FACTOR LSB
34	LM CURRENT WEIGHT MSB	LM CURRENT WEIGHT LSB
35	RSBBQ	RSBBQ+1
36	RR CDU SHAFT	ACTUAL PIPA X
37	ACTUAL PIPA Y	ACTUAL PIPA Z
38	ACTUAL CDU X	ACUTAL CDU Y
39	ACTUAL CDU Z	RR CDU TRUNNION
40	FLAGWORD 0	FLAGWORD 1
41	FLAGWORD 2	FLAGWORD 3
42	FLAGWORD 4	FLAGWORD 5
43	FLAGWORD 6	FLAGWORD 7
44	FLAGWORD 8D	FLAGWORD 9D
45	DSPTAB +0	DSPTAB +1
46	DSPTAB +2	DSPTAB +3
47	DSPTAB +4	DSPTAB +5
48	DSPTAB +6	DSPTAB +7
49	DSPTAB +8D	DSPTAB +9D
50	DSPTAB +10D	DSPTAB +11D

LM COAST AND ALIGN - CONTINUED

WORD NUMBER	FIRST REGISTER	SECOND REGISTER
51	TIME 2	TIME 1
52	LAT CAL LM ST VEC X POS MSB	LAT CAL LM ST VEC X POS LSB
53	LAT CAL LM ST VEC Y POS MSB	LAT CAL LM ST VEC Y POS LSB
54	LAT CAL LM ST VEC Z POS MSB	LAT CAL LM ST VEC Z POS LSB
55	LAT CAL LM ST VEC X VEL MSB	LAT CAL LM ST VEC X VEL LSB
56	LAT CAL LM ST VEC Y VEL MSB	LAT CAL LM ST VEC Y VEL LSB
57	LAT CAL LM ST VEC Z VEL MSB	LAT CAL LM ST VEC Z VEL LSB
58	STATE VECTOR TIME MSB	STATE VECTOR TIME LSB
59	GARBAGE	DESIRED CDU X INTERMED
60	DESIRED CDU Y INTERMED	DESIRED CDU Z INTERMED
61	BODY RATE (P)	BODY RATE (Q)
62	BODY RATE (R)	GARBAGE
63	RR TURNNION ERROR	RR SHAFT ERROR
64	LR VEL X (RAW DATA)	LR VEL Y (RAW DATA)
65	LR VEL Z (RAW DATA)	LR RANGE (RAW DATA)
66	OGC MSB	OGC LSB
67	IGC MSB	IGC LSB
68	MGC MSB	MGC LSB
69	STAR +0	STAR +1
70	STAR +2	STAR +3
71	STAR +4	STAR +5
72	REDO CNTR	DESIRED CDU X FINAL
73	DESIRED CDU Y FINAL	DESIRED CDU Z FINAL
74	SPARE	SPARE
75	SPARE	SPARE
76	STAR I.D. 1	STAR I.D. 2
77	STAR SIGHTING VEC 1 X POS MSB	STAR SIGHTING VEC 1 X POS LSB
78	STAR SIGHTING VEC 1 Y POS MSB	STAR SIGHTING VEC 1 Y POS LSB
79	STAR SIGHTING VEC 1 Z POS MSB	STAR SIGHTING VEC 1 Z POS LSB
80	STAR SIGHTING VEC 2 X POS MSB	STAR SIGHTING VEC 2 X POS LSB
81	STAR SIGHTING VEC 2 Y POS MSB	STAR SIGHTING VEC 2 Y POS LSB
82	STAR SIGHTING VEC 2 Z POS MSB	STAR SIGHTING VEC 2 Z POS LSB
83	RADMODES	DAPBOOLS
84	SUMRATE (Q)	SUMRATE (R)
85	CADRFLSH	CADRFLSH +1
86	CADRFLSH +2	FAILREG
87	FAILREG +1	FAILREG +2
88	ACTUAL CDU X	ACTUAL CDU Y
89	ACTUAL CDU Z	RR CDU TRUNNION
90	IMODES 30	IMODES 33
91	CHANNEL 11	CHANNEL 12
92	CHANNEL 13	CHANNEL 14
93	CHANNEL 30	CHANNEL 31
94	CHANNEL 32	CHANNEL 33
95	DSPTAB +0	DSPTAB +1
96	DSPTAB +2	DSPTAB +3
97	DSPTAB +4	DSPTAB +5
98	DSPTAB +6	DSPTAB +7
99	DSPTAB +8D	DSPTAB +9D
100	DSPTAB +10D	DSPTAB +11D

LM RENDEZVOUS AND PRETHRUST

WORD NUMBER	FIRST REGISTER	SECOND REGISTER
1	DOWNLIST I.D.	SYNC BITS (77340-OCTAL)
2	LAT CAL CM ST VEC X POS MSB	LAT CAL CM ST VEC X POS LSB
3	LAT CAL CM ST VEC Y POS MSB	LAT CAL CM ST VEC Y POS LSB
4	LAT CAL CM ST VEC Z POS MSB	LAT CAL CM ST VEC Z POS LSB
5	LAT CAL CM ST VEC X VEL MSB	LAT CAL CM ST VEC X VEL LSB
6	LAT CAL CM ST VEC Y VEL MSB	LAT CAL CM ST VEC Y VEL LSB
7	LAT CAL CM ST VEC Z VEL MSB	LAT CAL CM ST VEC Z VEL LSB
8	STATE VECTOR TIME MSB	STATE VECTOR TIME LSB
9	GARBAGE	DESIRED CDU X INTERMED
10	DESIRED CDU Y INTERMED	DESIRED CDU Z INTERMED
11	BODY RATE (P)	BODY RATE (Q)
12	BODY RATE (R)	GARBAGE
13	RR TURNNION ERROR	RR SHAFT ERROR
14	LR VEL X (RAW DATA)	LR VEL Y (RAW DATA)
15	LR VEL Z (RAW DATA)	LR RANGE (RAW DATA)
16	SPARE	SPARE
17	RR RANGE (RAW DATA)	RR RANGE RATE (RAW DATA)
18	CDU Y AT MARKTIME	CDU Z AT MARKTIME
19	CDU X AT MARKTIME	NUMBER OF MARKS
20	RR TRUNNION AT MARKTIME	RR SHAFT AT MARKTIME
21	MARKTIME MSB	MARKTIME LSB
22	RR RANGE AT MARKTIME MSB	RR RANGE AT MARKTIME LSB
23	RR RANGE RATE AT MARKTIME MSB	RR RANGE RATE AT MARKTIME LSB
24	TRUNNION BIAS MSB	TRUNNION BIAS LSB
25	SHAFT BIAS MSB	SHAFT BIAS LSB
26	CSI TIME MSB	CSI TIME LSB
27	CSI DELTA VEL X MSB	CSI DELTA VEL X LSB
28	CSI DELTA VEL Y MSB	CSI DELTA VEL Y LSB
29	CSI DELTA VEL Z MSB	CSI DELTA VEL Z LSB
30	SPARE	SPARE
31	SPARE	SPARE
32	REDO CNTR	DESIRED CDU X FINAL
33	DESIRED CDU Y FINAL	DESIRED CDU Z FINAL
34	LM CURRENT WEIGHT MSB	LM CURRENT WEIGHT LSB
35	RSBBQ	RSBBQ+1
36	RR CDU SHAFT	ACTUAL PIPA X
37	ACTUAL PIPA Y	ACTUAL PIPA Z
38	ACTUAL CDU X	ACTUAL CDU Y
39	ACTUAL CDU Z	RR CDU TRUNNION
40	FLAGWORD 0	FLAGWORD 1
41	FLAGWORD 2	FLAGWORD 3
42	FLAGWORD 4	FLAGWORD 5
43	FLAGWORD 6	FLAGWORD 7
44	FLAGWORD 8D	FLAGWORD 9D
45	DSPTAB +0	DSPTAB +1
46	DSPTAB +2	DSPTAB +3
47	DSPTAB +4	DSPTAB +5
48	DSPTAB +6	DSPTAB +7
49	DSPTAB +8D	DSPTAB +9D
50	DSPTAB +10D	DSPTAB +11D

LM RENDEZVOUS AND PRETHRUST - CONTINUED

WORD NUMBER	FIRST REGISTER	SECOND REGISTER
51	TIME 2	TIME 1
52	LAT CAL LM ST VEC X POS MSB	LAT CAL LM ST VEC X POS LSB
53	LAT CAL LM ST VEC Y POS MSB	LAT CAL LM ST VEC Y POS LSB
54	LAT CAL LM ST VEC Z POS MSB	LAT CAL LM ST VEC Z POS LSB
55	LAT CAL LM ST VEC X VEL MSB	LAT CAL LM ST VEC X VEL LSB
56	LAT CAL LM ST VEC Y VEL MSB	LAT CAL LM ST VEC Y VEL LSB
57	LAT CAL LM ST VEC Z VEL MSB	LAT CAL LM ST VEC Z VEL LSB
58	STATE VECTOR TIME MSB	STATE VECTOR TIME LSB
59	GARBAGE	DESIRED CDU X INTERMED
60	DESIRED CDU Y INTERMED	DESIRED CDU Z INTERMED
61	BODY RATE (P)	BODY RATE (Q)
62	BODY RATE (R)	GARBAGE
63	RR TRUNNION ERROR	RR SHAFT ERROR
64	LR VEL X (RAW DATA)	LR VEL Y (RAW DATA)
65	LR VEL Z (RAW DATA)	LR RANGE (RAW DATA)
66	TIGN MSB	TIGN LSB
67	VGX MSB	VGX LSB
68	VGY MSB	VGY LSB
69	VGZ MSB	VGZ LSB
70	CENTRAL ANGLE MSB	CENTRAL ANGLE LSB
71	CDH TIME (MSB)	CDH TIME (LSB)
72	CDH DELTA VEL X (MSB)	CDH DELTA VEL X (LSB)
73	CDH DELTA VEL Y (MSB)	CDH DELTA VEL Y (LSB)
74	CDH DELTA VEL Z (MSB)	CDH DELTA VEL Z (LSB)
75	CDH DELTA ALTITUDE (MSB)	CDH DELTA ALTITUDE (LSB)
76	CDH APSIS (MSB)	CDH APSIS (LSB)
77	TPI TIME (MSB)	TPI TIME (LSB)
78	TPI DELTA VEL X (MSB)	TPI DELTA VEL X (LSB)
79	TPI DELTA VEL Y (MSB)	TPI DELTA VEL Y (LSB)
80	TPI DELTA VEL Z (MSB)	TPI DELTA VEL Z (LSB)
81	ELEVATION ANGLE (MSB)	ELEVATION ANGLE (LSB)
82	TPF TIME (MSB)	TPF TIME (LSB)
83	RADMODES	DAPBOOLS
84	SUMRATE (Q)	SUMRATE (R)
85	CADRFLSH	CADRFLSH +1
86	CADRFLSH +2	FAILREG
87	FAILREG +1	FAILREG +2
88	ACTUAL CDU X	ACTUAL CDU Y
89	ACTUAL CDU Z	RR CDU TRUNNION
90	IMODES 30	IMODES 33
91	CHANNEL 11	CHANNEL 12
92	CHANNEL 13	CHANNEL 14
93	CHANNEL 30	CHANNEL 31
94	CHANNEL 32	CHANNEL 33
95	DSPTAB +0	DSPTAB +1
96	DSPTAB +2	DSPTAB +3
97	DSPTAB +4	DSPTAB +5
98	DSPTAB +6	DSPTAB +7
99	DSPTAB +8D	DSPTAB +9D
100	DSPTAB +10D	DSPTAB +11D

TABLE 10-IV LGC DOWNLINK BIT ASSIGNMENTS

LGC DOWN-LINK LOCATION	BIT / CHANNEL	15	14	13	12	11	10	9	8	7	6	5	4	3	2	1
	OUTBITS 5 RCS (P&R)								B1D	A1U	A2D	B2U	B3D	A3U	A4D	B4U
	OUTBITS 6 RCS (YAW)								B1L	A4R	A3R	B2L	A2A	A1F	B4F	B3A
W91R1	OUTBITS 11 "A" RELAYS		ENGINE OFF	ENGINE ON			CAUTION RESET	TEST CONNECTOR OUTBIT		OPERATOR ERROR	VERB-NOUN FLASH	KEY RELEASE FLASH	TEMP CAUTION	UPLINK ACTIVITY	COMPUTER ACTIVITY	ISS WARNING
W91R2	OUTBITS 12 GN&C	ISS TURN-ON DELAY COMPLETE	RR ENABLE AUTO TRACK	LR POSITION COMMAND	+ROLL GIMBAL TRIM	-ROLL GIMBAL TRIM	+PITCH GIMBAL TRIM	-PITCH GIMBAL TRIM	DISPLAY INERTIAL DATA		IMU ERROR COUNTER ENABLE	IMU CDU ZERO	COARSE ALIGN ENABLE		RR ERROR COUNTER ENABLE	RR CDU ZERO
W92R1	OUTBITS 13 RADAR & LGC	ENABLE T6 RUPT	RESET TRAP 32	RESET TRAP 31-B	RESET TRAP 31-A	STANDBY ENABLE	TEST ALARMS	START RHC READ	RHC COUNTER ENABLE	DOWNLINK WORD ORDER			RADAR ACTIVITY	RADAR SELECTION A*	RADAR SELECTION B*	RADAR SELECTION C*
W92R2	OUTBITS 14 IMU	DRIVE CDU X	DRIVE CDU Y	DRIVE CDU Z	DRIVE CDU T	DRIVE CDU S	GYRO ACTIVITY	GYRO SIGN MINUS	GYRO SELECT A**	GYRO SELECT B**	GYRO ENABLE		THRUST DRIVE	ALTITUDE METER ACTIVITY	ALTITUDE RATE SELECT	
	INBITS 15 MAIN KEYBOARD											KEY 5M	KEY 4M	KEY 3M	KEY 2M	KEY 1M
	INBITS 16 AOT									DESCENT (-)	DESCENT (+)	MARK REJECT	MARK Y	MARK X		
W93R1	INBITS 30 GN&C	ISS TEMP IN LIMITS	ISS TURN ON REQUEST	IMU FAIL	IMU CDU FAIL	IMU CAGE	G&N CONTROL OF S/C	IMU OPERATE		RR CDU FAIL	DISPLAY INERTIAL DATA	AUTO THROTTLE	ABORT STAGE	ENG ARMED	STAGE NOT VERIFIED	ABORT
W93R2	INBITS 31 TRANS & ROT	ATT CONTROL OUT OF DETENT	AUTO STAB	ATT HOLD	-Z TRANS	+Z TRANS	-Y TRANS	+Y TRANS	-X TRANS	+X TRANS	-AZ (LPD) -RMI	+AZ (LPD) +RMI	-YMI	+YMI	-EL (LPD) -PMI	+EL (LPD) +PMI
W94R1	INBITS 32 IMPULSE		PROCEED				APPARENT GIMBAL FAIL	GIMBAL OFF	THRUSTER 10&11 FAIL	THRUSTER 9&12 FAIL	THRUSTER 13 & 15 FAIL	THRUSTER 14&16 FAIL	THRUSTER 6&7 FAIL	THRUSTER 1&3 FAIL	THRUSTER 5&8 FAIL	THRUSTER 2&4 FAIL
W94R2	INBITS 33 LGC & RADAR	OSC ALARM	LGC WARNING	PIPA FAIL	DWNLINK TOO FAST	UPLINK TOO FAST	BLOCK UPLINK INPUT	LR RANGE LOW SCALE	LANDING VEL DATA GOOD	LR POS #2	LR POS #1	LR DATA GOOD	RR DATA GOOD	RR RANGE LOW SCALE	RR POWER ON AUTO	
W83R1	RADAR MODES RADMODES	CONTINUOUS DESIGNATE	RR ANT REMODE	RR CDU BEING ZEROED	RR ANT MODE II	MONITOR REPOSITION IN PROGRESS	RR ANT DESIGNATE	LR HI SCALE (ALT)	LR VEL DATA FAIL	RR CDU GOOD	LR ANT POS 2	NO LR POS DATA	RR DATA NO GOOD	RR HI SCALE	RR NOT IN AUTO	RR TURN-ON SEQUENCE
W83R2	DAPBOOLS	MIN IMP COMMAND MODE	GTS NOT ALLOWED	CSM DOCKED	IN RATE COMMAND	4 JET X-TRANS REQ	USE B SYS FOR X TRANS	IN LPD PHASE	ASSUME ZERO OFFSET ACCEL	RHC SCALE NORM	ULLAGE REQUESTED	AORB-SYST ****	DB SELECT MAX	ACCS OKAY	ASTRONAUT CHOSEN KALCMANU RATES (SEE TABLE)***	
W90R1	T MODES 30	ISS TEMP NOT IN LIMIT	ISS TURN ON NOT REQ	NO IMU FAIL	NO CDU FAIL	NO IMU CAGE	NO PIPA FAIL	ISS NOT OPERATING	1 SAMPLE ISS WAIT	ISS INITIAL REQ	IMU BEING INITIALIZED	PIPA FAIL INHIBIT (ALARMS)	IMU FAIL INHIBIT	ICDU FAIL INHIBIT		PIP FAIL INHIBIT (ISS WARN)
W90R2	T MODES 33		DO NOT PROCEED	NO PIPA FAIL	DOWN LINK NOT TOO FAST	UPLINK NOT TOO FAST					DAP DISABLE					LAMP TEST IN PROGRESS
W40R1	FLAGWORD 0	CPHI FLG	J SWITCH	MID FLAG	MOON FLG (L)	VINH FLG (L)	(L) VORIDEFL / Z MEAS	P25 FLG	IMUSE	RNDVZ FLG	RRNB SW	LOKONSW		FREE FLG	B29 FLG	K FLG
W40R2	FLAGWORD 1	N JETS FLG		ERAD FLG	APS FLG	ASUM VEHF			VEHUP FLG	UPDATE FLG	NOUP FLG	TRACK FLG	GIMBL FLG	ITER 1 SW / SLOPE SW	GUESSW	HINH FLG (L)
W41R1	FLAGWORD 2	DRIFT FLG	SRCH OPTN	22D SP FLG	LOSCM FLG / R04 FLG	STEER SW	CYCLE SW	IMPUL SW	XDELV FLG	ETP1 FLG / FIRST FLG / OPTNSW (L)	FINAL FLG	AV FLG	PFRAT FLG	CALCMAN 3	CALCMAN 2	NODO FLG
W41R2	FLAGWORD 3	AUTMAN SW	GLOK FAIL	REFSM FLG	LUNA FLG	UPDTESAV	V FLG		PRECI FLG	CULT FLG	ORB W FLG	STATE FLG	INTYP FLG	VINT FLAG	D6 OR 9 FLG	DIMO FLG
W42R1	FLAGWORD 4	MRKID FLG	PRIOD FLG	NRMID FLG	PDSP FLG	M WAIT FLG	MWAIT FLG	MRKNV FLG	NRMMV FLG	PRONV FLG	PIN BR FLG	MRUPT FLG	NRUPT FLG	MKOV FLG		XDSP FLG
W42R2	FLAGWORD 5	DSKY FLG	INT FLG 2	INT FLG 3	NO THROTL		RNGSCFLG	DMEN FLG	COMPUTER	ENG ON FLG	3 AXIS FLG	NO ANG FLG	NORRMON	SOLN SW	MGLV FLG	RENDW FLG
W43R1	FLAGWORD 6	S32.1F1	S32.1F2	S32.1F3	S 32.1F3B		GMBDRV SW		MUN FLG	ABDPS FLG (L)	REDES FLG (L)	KILLROSE (L)	KILLMON 2 (L)	(L) S FLG / NTARGFLG	ASCNT FLG (L)	GYM DIF SW / ATT FLG (L)
W43R2	FLAGWORD 7		MANU FLG / ITSWICH	IGN FLG	ASTN FLG	(L) SWAN DISP	NORM SW	RVSW		IDLE FLG	V37 FLG	AVEG FLG	UPLOCK FLG	VERI FLG	ATTCH FLG	TFF SW
W44R1	FLAGWORD 8	RPQ FLG	R32 FLG	NEWI FLG	CMOON FLG	LMOON FLG	FAIL FLAG (L)		SURF FLG (L) / P22 FLG	INFIN FLG	ORDER SW	APSE SW	COGA FLG			360 SW
W44R2	FLAGWORD 9	ENG OFF SW (L)	FLVR (L)	FLP70 (L)	FLPC (L)	FLPI (L)	FL RCS (L)	P63 FLG (L)	FLAP (L)	FLIC (L)	FLZONED (L)	QUIT FLG	R31 FLG	MID 1 FLG (L)	MIDAV FLG (L)	AVEMID SW
	TM SYL & BIT	7	6	5	4	3	2	1	8	7	6	5	4	3	2	1
		TM SYLLABLE 1							TM SYLLABLE 2							

RADAR SELECTION*

A	B	C	FUNCTION
0	0	0	-
0	0	1	RR RANGE
0	1	0	RR RANGE RATE
0	1	1	-
1	0	0	LR X VELOCITY
1	0	1	LR Y VELOCITY
1	1	0	LR Z VELOCITY
1	1	1	LR RANGE

GYRO SELECT**

A	B	GYRO
0	0	-
0	1	X
1	0	Y
1	1	Z

CHANNELS 30, 31, 32 AND 33 USE INVERTED LOGIC - FOR ALL OTHER CHANNELS AND FLAGWORDS A LOGIC 1 INDICATES THE "ON" STATE

KALCMANU AUTOMATIC MANEUVER RATE SELECTION***

BIT 1	BIT 2	MANEUVER RATE
0	0	0.2 DEG/SEC
1	0	0.5 DEG/SEC
0	1	2.0 DEG/SEC
1	1	10.0 DEG/SEC

AORB SYSTEM ****

BIT 5	P AXIS JET COUPLES USED
1	B3A A1F A3R B1L
0	A4R B2L B4F A2A

TM WORD NUMBER	LGC REG	TM SYL
121	1	1
122	1	2
123	2	1
124	2	2

INDICATES SPARES OR BITS NOT USED BY LM-3

(L) INDICATES FLAG IS USED IN LUMINARY

TABLE 10-X-LM-3 LGC REFERENCE MATRIX

	VERB	NOUN	PROG	ROUT
00	NOT IN USE	NOT IN USE	LGC IDLING	FINAL AUTO REQ TERM
01	DISPLAY OCT COMP 1 (R1)	SPECIFY ADDRESS (FRAC)		
02	DISPLAY OCT COMP 2 (R1)	SPECIFY ADDRESS (WHOLE)		IMU STATUS CHK
03	DISPLAY OCT COMP 3 (R1)	SPECIFY ADDRESS (DEG)		DAP DATA LOAD
04	DISPLAY OCT COMP 1, 2 (R1, R2)			RR/LR SELF TEST
05	DISPLAY OCT COMP 1,2,3 R_1 R_2 R_3	ANG ERR/DIF (DEG)		S-BAND ANT
06	DISPLAY DEC IN R1 OR R1,R2 OR R1,R2,R3	OPTION CODE (OCT)	PGNS POWER DOWN	
07	DISPLAY DP DEC IN R1,R2 (TEST ONLY)			
08		ALARM DATA (OCT)		
09		ALARM CODES (OCT)		
10		CHANNEL TO BE SPEC (OCT)		
11	MON OCTAL COMP 1 (R1)			
12	MON OCTAL COMP 2 (R1)			
13	MON OCTAL COMP 3 (R1)			
14	MON OCT COMP 1,2 (R1 R2)	CHECKLIST		
15	MON OCT COMP 1, 2, 3 (R1, R2, R3)	INCREM ADDR (OCT)		
16	MON DEC IN R1 OR R1, R2 OR R1, R2, R3	TIME OF EVENT		
17	MON DP DEC IN R1, R2 (TEST ONLY)	ASTRONAUT TOTAL ATT		
18		AUTO MANV BALL ANGLES		
19		BYPASS ATT TRIM MANV		
20		ICDU ANGLES (DEG)	REND NAV	
21	LOAD COMP 1 (R1)	PIPAS (PULSES)	GRND TRK DETER	REND DESIG
22	LOAD COMP 2 (R2)	NEW ICDU ANGLES (DEG)		RR DATA READ
23	LOAD COMP 3 (R3)			RR MAN ACQ
24	LOAD COMP 1,2 (R1,R2)	DELTA TIME (HRS) (MIN) (SEC)		RR SEARCH

	VERB	NOUN	PROG	ROUT
25	LOAD COMP 1,2,3 (R1,R2,R3)	CHECK LIST (V50 ONLY)	PREFER TRK ATT	RR MON
26		PRIO/DELAY ADRES BBCON (OCT)		
27	DISPLAY FIXED MEM	SELF TEST ON/OFF SW	LGC UPDATE	
28				
29		LR FLAG STATUS		
30	REQ EXEC	TIG OF CSI (HRS) (MIN) (SEC)	EXT DELV	ORBIT PARAM DISPLAY
31	REQ WAIT LIST	TIG OF CDH (HRS) (MIN) (SEC)		REND PARAM DISPLAY
32	RECYC PROG	PERIGEE TIME (HRS) (MIN SEC)	CSI	TARGET DELV
33	PROC WITHOUT DSKY INPUT	IGNITION TIME (HR) (MIN) (SEC)	CDH	CMC LGC CLOCK SYNC
34	TERM FUNC	EVENT TIME (HR MIN SEC)	TPI	
35	TEST LIGHTS	TGO EVENT (HRS) (MIN) (SEC)	XFER PHASE	
36	REQ FRESH START	LGC CLOCK TIME (HRS) (MIN) (SEC)		REND OUT OF PLANE DISPLAY
37	CHANGE MAJOR MODE	TIG OF TPI (HRS) (MIN) (SEC)		
38				
39				
40	ZERO CDUS	TIME TO IGN/CUTOFF VG DV (ACC)	DPS	
41	COARSE ALIGN CDUS	TARGET AZIMUTH ELEVATION	RCS	
42	FINE ALIGN IMU	APOGEE PERIGEE DELV (REQ)	APS	
43	LOAD IMU ATT ERR METERS	LAT LONG ALT		
44	TERM RR CONTINUOUS DESIGNATE	APOGEE PERIGEE TFF		
45		MARKS TTI OF NEXT BURN MGA		
46		AUTO PILOT CONFIG		
47	INIT AGS (R47)	LM/CSM WEIGHT	THRUST MON	AGS INITIAL
48	LOAD DAP DATA (R03)	GIMBAL P/R TRIM		
49	REQ CREW DEFINED MANV (R62)	DELR DELV		

	VERB	NOUN	PROG	ROUT
50	PLEASE PERFORM	Δ ALT (CDH) ΔT (CDH-CSI) ΔT (TPI-CDH)		COARSE ALIGN
51		S-BAND ANT R/Y ANGLES	IMU ORIEN DET	FINE ALIGN
52	MARK X-RET	CENTRAL ANGLE OF ACT VEHICLE	IMU RE-ALIGN	AUTO OPT POS
53	MARK Y-RET	DELV CSI OR TPI DELV CDH OR TPF CROSS RANGE		INFLT SIGHT MARK
54	MARK X OR Y RET	RANGE R RATE THETA (NM) (FPS) (DEG)		SIGHTING DATA DISPLAY
55	INCR LGC TIME (DEC)	NO. APSIDAL CROSSINGS ELEV ANG CENT ANG OF PAS VEH		GYRO TORQ
56	TERM TRK (P20 OR P25)	NO. APSIDAL CROSSINGS ELEV ANG DESIRED DELTA H AT CDH		
57	SET ALTITUDE INHIBIT	DELTA R		
58	RESET ALTITUDE INHIBIT	PERIG ALT DELV TPI DELV TPF (NM) (FPS)		
59		DELV LOS		
60		HOR VEL ALT RATE COMP ALT		ATT MAN
61	COMD LR TO POS 2	TIG TGO (BRAK PHASE) CROSS RANGE DISTANCE		PREF TRACK ATT
62	SAMPLE RADAR ONCE PER SEC (R04)	| VEL | TIG DELV (ACC)		CREW DEFINED MAN
63		| VEL | ALT RATE COMP ALT		RNDZ FIN ATTD MANV
64	REQ S-BAND ANT ROUT (R05)	TIME LEFT FOR BRAKES ALT RATE COMP ALT		
65		SAMPLED LGC TIME (HRS) (MIN) (SEC)		
66	VEHICLES ATTACHED	LR RANGE/ POS		
67		LRVX LRVY LRVZ		
68		SLANT RANGE (TO LDG SITE) TGO (BRAK PHASE) LR/COMP ALT		
69	CAUSE RESTART	DELV LAST DELV DVMON DELV TOTAL		
70	UPDATE LIFT TIME	AOT DETENT CODE/ STAR CODE		
71	UNIV UPDATE BLOCK ADR	AOT DETENT CODE/ STAR CODE		
72	UNIV UPDATE SINGLE ADR	RR TRUN/ SHAFT ANGLE	CSM CSI TARGET	
73	UPDATE LGC TIME (OCT)	NEW RR TRUN/ SHAFT ANGLE (DEG)	CSM CDH TARGET	
74	INIT ERAS DUMP VIA DWNLINK	TIG Y/P AFTER VEH RISE	CSM TPI TARGET	

	VERB	NOUN	PROG	ROUT
75		TIG DELV (ACC) COMP ALT	CSM MID-COURSE TARGET	
76	MIN IMP COMD MODE	CROSS RANGE DISTANCE APOCYNTHION ALT		
77	RATE COMD & ATT HOLD MODE	TIME TO ENG CUTOFF VEL NORM. TO CSM PLANE		LR SPURIOUS TEST
78	LR SPURIOUS TEST START (R77)	RR RANGE RANGE RATE		
79	LR SPURIOUS TEST STOP (R77)			
80	UPDATE LM STATE VECTOR	DATA INDICATOR OMEGA (DEG)		
81	UPDATE CSM STATE VECTOR	1 DVX (LV) DVY (LV) DVZ (LV) (FPS)		
82	REQ ORB PARAM DISPLAY (R30)	1 DVX (LV) DVY (LV) DVZ (LV) (FPS)		
83	REQ REND PARAM DISPLAY (R31)	DVX (BODY) DVY (BODY) DVZ (BODY) (FPS)		
84	START TARGET DELV (R32)	2 DVX (OV) DVY (OV) DVZ (OV) (FPS)		
85	RESET VELOCITY INHIBIT AND OVERRIDE	VGX (BODY) VGY (BODY) VGZ (BODY) (FPS)		
86	RESET VEL INHIBIT AND SET VEL OVERRIDE	1 VGX (LV) VGY (LV) VGZ (LV) (FPS)		
87	SET VEL INHIBIT AND RESET VEL OVERRIDE	BACKUP OPTICS LOS AZ/EL		
88		SUN OR PLANET HUNIT VECTORS		
89	REQ REND FINAL ATT ROUT (R63)	LANDMARK LAT LONG/2 ALT		
90	REQ REND OUT OF PLANE ROUT (R36)	Y YDOT PSI		
91	DISPLAY BANKSUM	TPI ALT TIME AND ANGLE FROM LAUNCH TO TPI		
92	OPER IMU PERF TEST (P07)	TIME AND ANGLE FROM LAUNCH TO TPF		
93	ENABLE W MATRIX INIT	DELTA GYRO ANGLES (DEG)		
94	DISPLAY LR FLAG STATUS	CSI ALT TIME AND ANGLE FROM LAUNCH TO CSI		
95	NO UPDATE OF EITHER STATE VECTOR (P20 OR P22)	PERF ATT ICDU ANGLES		
96		+X AXIS ATT ICDU ANGLES		
97		SYS TEST INPUTS		
98	PLEASE CONFIRM LANDING	SYS TEST INPUTS AND RESULTS		
99	PLEASE ENABLE ENGINE			

1 LV = LOCAL VERTICAL
2 OV = OTHER VEHICLE

INDICATES SPARES OR NOT ASSIGNED FOR LM III

TABLE 10-VI-SUNDANCE CROSS-REFERENCE

LM-3 ROUTINE LISTING

NUMBER	ROUTINE NAME	USED BY	REF CODES (V50 N25)	E/C (V05 N09)	C/O (V04 N06)
R00	FINAL AUTO REQ TERM	ALL PROGRAMS EXCEPT P00 AND P27 R02,R21,R22, R23,R24,R53			
R02	IMU STATUS CHECK	P20,P25,P40, P41,P42,P47, P52,R53,R63		00210 00220	
R03	DAP DATA LOAD	MANUAL SELECTION (V48)	00037	01706	
R04	RR/LR SELF TEST	MANUAL SELECTION DURING P00 ONLY (V62)	00201		00004
R21	RNDZ DSGNT	P20		00503 00527	
R22	RR DATA READ	P20		00521 00525	
R23	RR MAN ACQUISITION	P20	00205	00501 00527	
R24	RR SEARCH	R21		00527	
R25	RR MONITOR	T4RUPT (480 MSEC) P20		00501 00515	
R30	ORBIT PARAMETER DSPLY	P00 OR MANUAL SELECTION DURING P40, P41,P42,P47 (V82)			00002
R31	RNDZ PARAMETER DSPLY	MANUAL SELECTION (V83)			
R32	TARGET DELTA V	MANUAL SELECTION (V84)			
R33	CMC/LGC CLOCK SYNC	MANUAL SELECTION DURING P00 (V06N65)			
R36	RENDEZVOUS OUT-OF-PLANE DISPLAY	MANUAL SELECTION DURING P32-P35,P72-P75 (V90)			
R47	AGS INITIALIZATION	MANUAL SELECTION (V47)	00200	00220	
R50	COARSE ALIGN	P52			
R51	INFLIGHT FINE ALIGN	R51	00015 00014	00405	
R52	AUTO OPTICS POSITIONING	R51			
R53	INFLIGHT SIGHTING MARK	P51,R51	00015 00016 00017	00107 00111 00112 00114 00115	
R54	STAR DATA TEST	P51, R51			
R55	GYRO TORQUING	R51	00014		
R60	ATTD MANEUVER	P40,P41,P42, R52,R61,R62, R63		00401	
R61	PRFD TRCKG ATTD	P20,P25,R22, R23,R24			
R62	CREW DEFINED MANEUVER	MANUAL SELECTION DURING P00 ONLY (V49)			
R63	RNDZ FINAL ATTD	MANUAL SELECTION DURING P00 ONLY (V89)			00003
R77	LR SPURIOUS TEST	MANUAL SELECTION (V78)			

LM-3 PROGRAM LISTING

NUMBER	PROGRAM NAME	USES ROUTINES	REF CODES (V50 N25)	E/C (V05 N09)	C/O (V04 N06)
P00	LGC IDLING	R30			00002
P06	PGNCS POWER DOWN	R00	00062		
P20	RNDZ NAV	R00,R02,R21, R22,R23,R24, R25,R60,R61	00201 00203 00205	00210 00515 00220 00521 00401 00525 00501 00526 00503 00527	R31
P21	GND TRK DETRMN	R00			00002
P25	PREF TRKG ATTD	R00 R02,R60 R61	00203	00210 00220 00401	
P27	LGC UPDATE				
P30	EXTERNAL DELTA V	R00			
P32	CSI	R00		00600 00601 00602 00603 00604 00605 00606	R36
P33	CDH	R00		00611	R36
P34	TPI	R00		00611	R36
P35	TRANS PHASE (MID CRS)	R00			R36
P40	DPS	R00,R02,R60	00203	00210 00220 00401 01703 01706	R30
P41	RCS	R00,R02,R60		00210 00220 00401	R30
P42	APS	R00,R02,R60	00203	00210 00220 00401 01407 01703 01706	R30
P47	THRUST MON	R00,R02		00210 00220	R30
P51	IMU ORIEN DETRMN	R00,R02,R53, R54	00115 00116 00117	00107 00111 00112 00114 00115 00210 00222	
P52	IMU REALIGN	R00,R02 R50,R51 R52,R53 R54,R55 R60	00014 00015 00016 00017	00107 00210 00111 00215 00112 00220 00114 00401 00115 00405	00001
P72	CSM CSI TARGET	R00		00600 00601 00602 00603 00604 00605 00606	R36
P73	CSM CDH TARGET	R00		00611	R36
P74	CSM TPI	R00		00611	R36
P75	CSM TRANS PHASE (MID)	R00			R36

TABLE 10-VII.- AGS DIGITAL DOWNLINK

IDENTIFICATION CODE (BITS 0→5 OF OUTPUT WORD)		BINARY SCALING	UNITS	COMPUTER WORD (BITS 6→23 OF OUTPUT WORD OR BITS 0→17)			DESCRIPTION
WORD NUMBER	OCTAL NUMBER			SIGN BIT (BIT 0)	CODE (BITS 1→17)	NUMERIC DATA (BITS 1→17) (TWO'S COMPLEMENT BINARY FORMAT)	
1	01			δ_{41}			SET TO ONE WHEN DEPRESSION OF DEDA READOUT PUSHBUTTON IS SENSED. RESET BY DEDA CLEAR OR HOLD PUSHBUTTON.
2	02			±		DD	MOST RECENT COMPUTER WORD ENTERED OR READ OUT BY DEDA.
3	03			δ_{38}			SET TO ONE WHEN DEPRESSION OF DEDA CLEAR PUSHBUTTON IS SENSED. RESET BY DEDA ENTER OR READOUT PUSHBUTTON.
4	04	1		±		a_{11}	FIRST ROW OF ORTHNORMAL DIRECTION COSINE MATRIX RELATING LM BODY AXIS WITH AGS INERTIAL COORDINATE AXIS.
5	05			±		a_{12}	
6	06			±		a_{13}	
7	07				ADST (BITS 8→17)		DEDA OCTAL ADDRESS MODE $S_{00} = 400_8$ GUIDANCE $S_{10} = 410_8$ SELF TEST $S_{12} = 412_8$
8	10	1		±		a_{31}	THIRD ROW OF ORTHNORMAL DIRECTION COSINE MATRIX RELATING LM BODY AXIS WILL AGS INERTIAL COORDINATE AXIS.
9	11			±		a_{32}	
10	12			±		a_{33}	
11	13	25	FEET	±		h	LM ATTITUDE ABOVE NOMINAL EARTH RADIUS AT TIME t_1 AND t_2.
12	14	25	FEET	±		r_x	LM POSITION VECTOR IN AGS INERTIAL COORDINATES AT t_1 AND t_2.
13	15			±		r_y	
14	16			±		r_z	
15	17			EON	S_{10} (BITS 1→3)		A ONE IN THE SIGN BIT INDICATES THAT THE AEA IS COMMANDING ENGINE ON. GUIDANCE MODE (S10) IS OI (000), CSI (001), CDH (010), TPI 1 (011), TPI 2 (100), OR XDV (101).
16	20	25	FEET	±		r_{cx}	CSM POSITION VECTOR IN AGS INERTIAL COORDINATES AT TIME t_1 AND t_2.
17	21			±		r_{cy}	
18	22			±		r_{cz}	
19	23	25	FEET	+		r_f	PREDICTED VALUE OF THE LM ALTITUDE RADIAL DISTANCE AT THE COMPLETION OF CURRENT GUIDANCE MODE (S10).

TABLE 10-VII.- AGS DIGITAL DOWNLINK - CONTINUED

IDENTIFICATION CODE (BITS 0→5 OF OUTPUT WORD)		BINARY SCALING	UNITS	COMPUTER WORD (BITS 6→23 OF OUTPUT WORD OR BITS 0→17)			DESCRIPTION
WORD NUMBER	OCTAL NUMBER			SIGN BIT (BIT 0)	CODE (BITS 1→17)	NUMERIC DATA (BITS 1→17) (TWO'S COMPLEMENT BINARY FORMAT)	
20	24	3	FEET PER SECOND	±		ΔV_x	COMPENSATED INCREMENTAL VELOCITY CHANGE ALONG BODY AXES DURING 20 MILLISECOND.
21	25			±		ΔV_y	
22	26			±		ΔV_z	
23	27	1	SECONDS	+		t_2	LEAST SIGNIFICANT WORD OF THE DOUBLE PRECISION AGS ABSOLUTE TIME. CHANGED ONLY BY AN ABSOLUTE TIME INITIALIZE.
24	30	-6 (DURING IMU ALIGN 11)	RADIANS	±		$\Delta\alpha_x$	COMPENSATED INCREMENTAL VEHICLE ROTATION ABOUT BODY AXES DURING 20 MILLISECONDS. LEAST SIGNIFICANT SEVEN BITS (10→17) ARE ALWAYS ZERO EXCEPT DURING LUNAR ALIGN (S_{00} = 4). DURING IMU ALIGN (S_{00} = 3) THE GYRO DATA IS RAW.
25	31			±		$\Delta\alpha_y$	
26	32			±		$\Delta\alpha_z$	
27	33	9	SECONDS	±		T_B	PREDICTED TIME TO ENGINE CUTOFF.
28	34	15	FEET PER SECOND	±		V_x	LM VELOCITY IN AGS INERTIAL COORDINATES AT TIME t_1 AND t_2.
29	35			±		V_y	
30	36			±		V_z	
31	37	17		+		μ_{8_T}	NUMBER OF CONSECUTIVE TWO SECOND CYCLE IN WHICH THE SENSED X-BODY AXIS THRUST ACCELERATION HAS EXCEEDED A THRESHOLD LEVEL.
32	40	15	FEET PER SECOND	±		V_{cx}	CSM VELOCITY IN AGS INERTIAL COORDINATES AT TIME t_1 AND t_2.
33	41			±		V_{cy}	
34	42			±		V_{cz}	
35	43	15	FEET PER SECOND	±		$\dot{h}$	LM ALTITUDE RATE AT TIME t_1 AND t_2.
36	44	15	FEET PER SECOND	±		V_G	MAGNITUDE OF VELOCITY TO BE GAINED FOR EXISTING GUIDANCE MODE (S10).
37	45	15	FEET PER SECOND	±		V_{PO}/V_T	V_{PO}, PREDICTED VALUE OF CDH (S_{10} = 2) BURN MAGNITUDE IS OUTPUT DURING CSI MODE (S_{10} = 1) OR V_T, TOTAL PREDICTED VELOCITY REQUIRED TO RENDEZVOUS IS OUTPUT DURING TPI MODE (S_{10} = 3 OR 4).

TABLE 10-VII.- AGS DIGITAL DOWNLINK - CONCLUDED

IDENTIFICATION CODE (BITS 0→5 OF OUTPUT WORD)		BINARY SCALING	UNITS	COMPUTER WORD (BITS 6→23 OF OUTPUT WORD OR BITS 0→17)			DESCRIPTION
WORD NUMBER	OCTAL NUMBER			SIGN BIT (BIT 0)	CODE (BITS 1→17)	NUMERIC DATA (BITS 1→17) (TWO'S COMPLEMENT BINARY FORMAT)	
38	46			+	S_{12T} (BITS 1→3)		AEA SELF TEST STATUS INDICATOR (S_{12}) IS RESTART TEST (000), TEST SUCCESS (001), LOGIC FAILURE (011), MEMORY FAILURE (100), OR LOGIC AND MEMORY FAILURE (111).
39	47	18	FEET PER SECOND			T_{AO}/T_{igC}	T_{AO}, THE PREDICTED TIME BETWEEN CSI BURN AND CDH BURN DURING CSI MODE (S_{10} = 1) VALUES VARY UNTIL SOLUTION CONVERGES. T_{igC} ABSOLUTE TIME FOR WHICH TPI BURN IS BEING COMPUTED DURING TPI MODE (S_{10} = 3 OR 4).
40 41 42	50 51 52	1		± ± ±		a_{11bD} a_{12bD} a_{13bD}	UNIT VECTOR DEFINING GUIDANCE DESIRED POINTING DIRECTION FOR LM THRUST AXIS.
43	53	18	SECONDS	+		t_1	MOST SIGNIFICANT WORD OF THE DOUBLE PRECISION AGS ABSOLUTE TIME. SET BY ABSOLUTE TIME INITIALIZE AND INCREMENTED IN 2 SECOND INTERVALS.
44	54			+	S_{00} (BITS 1→3)		SUBMODE LOGIC (S_{00}) IS ATTITUDE HOLD (000), GUIDANCE STEERING (001), ACQUISITION STEERING (010), IMU ALIGN (011), LUNAR ALIGN (100), BODY AXIS ALIGN (101), CALIBRATE (110), OR ACCELEROMETER CALIBRATE (111).
45	55				DISC1C (BITS 1→8)		DISCRETE WORD ONE (0=ON) BIT 1 DOWNLINK TELEMETRY STOP BIT 2 OUTPUT TELEMETRY STOP BIT 3 FOLLOW UP (ACA OUT OF DETENT OR PGNS IN USE) BIT 4 AUTOMATIC BIT 5 DESCENT ENGINE ON BIT 6 ASCENT ENGINE ON BIT 7 ABORT BIT 8 ABORT STAGE
46	56	25	FEET PER SECOND	±		$\Delta h/q_1$	Δh, PREDICTED DIFFERENTIAL ALTITUDE BETWEEN CSM AND LM ORBITS AFTER CDH BURN DURING CSI (S_{10} = 1) AND CDH (S_{10} = 2). q_1, THE PERIFOCUS ATTITUDE OF THE COMPUTED TRANSFER ORBIT DURING TPI MODE (S_{10} = 3 OR 4).
47	57	25	FEET	±		q	PERIFOCUS ALTITUDE OF PRESENT LM ORBIT.
48 49 50	60 61 62	15	FEET PER SECOND	± ± ±		V_{dx} V_{dy} V_{dz}	SUMS OF SENSED VELOCITY INCREMENTS ALONG THE BODY AXES.

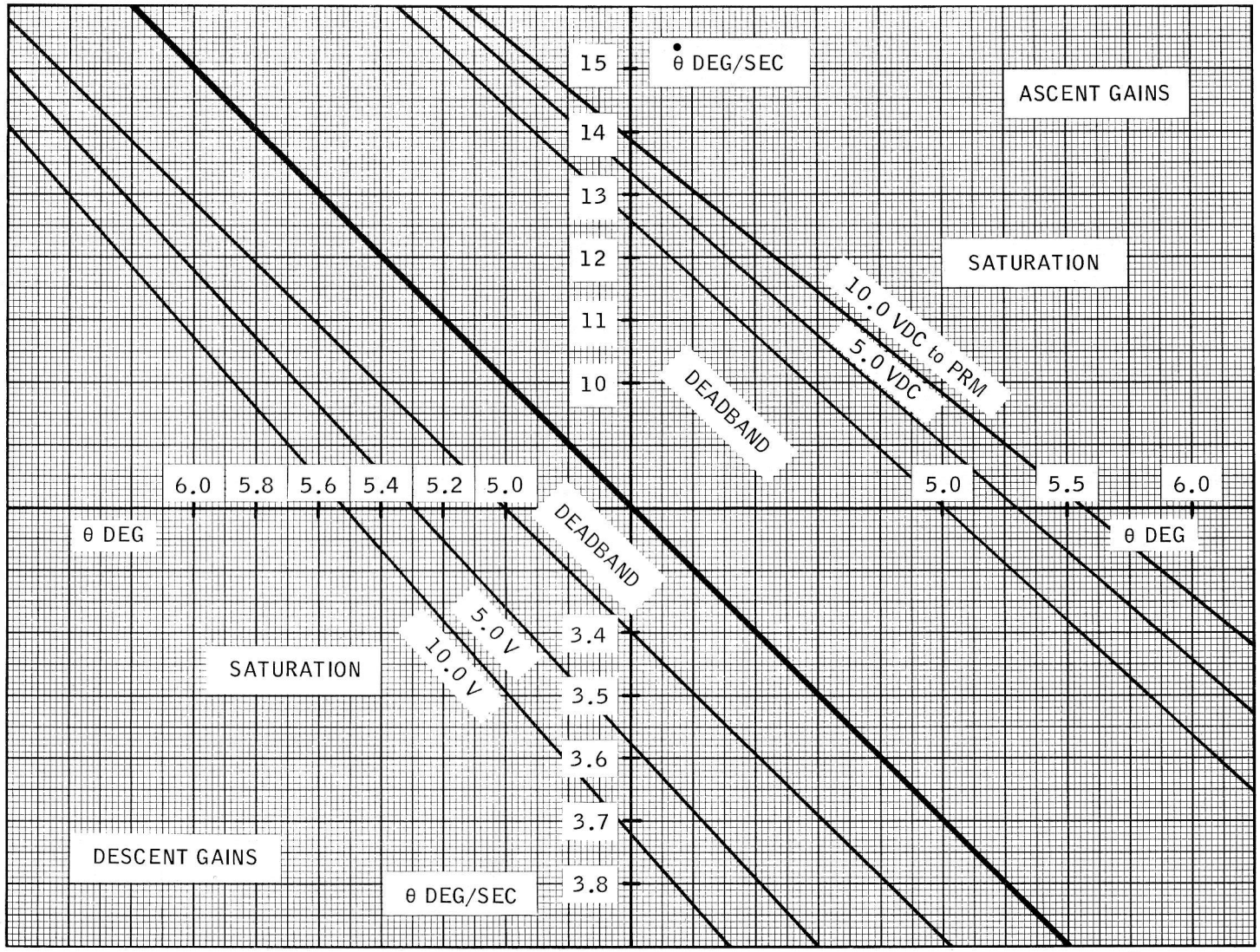

Figure 10-2.1.- AGS phase plane - wide deadband for ascent or descent gains.

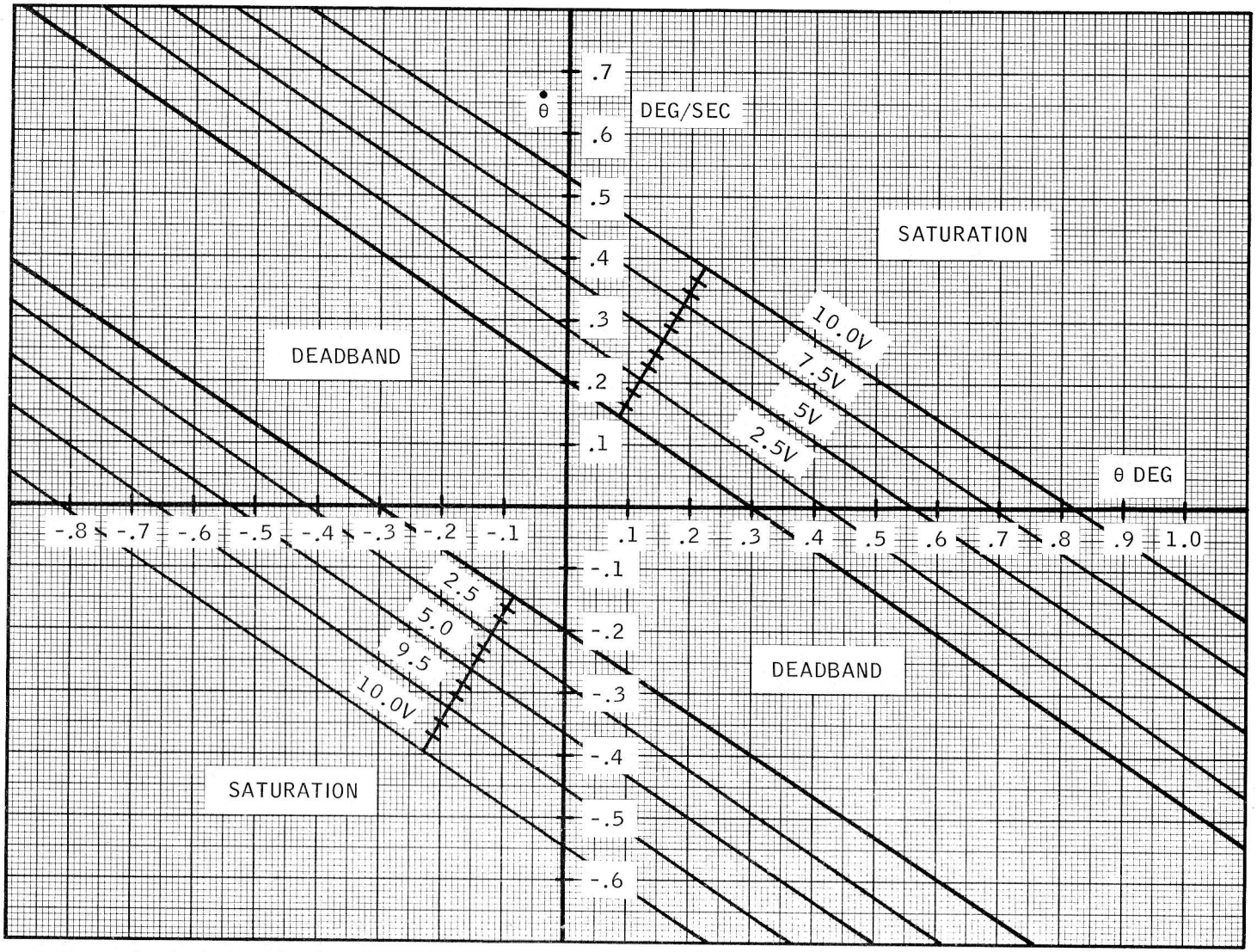

Figure 10-2.2.- AGS phase plane - narrow deadband for descent gains.

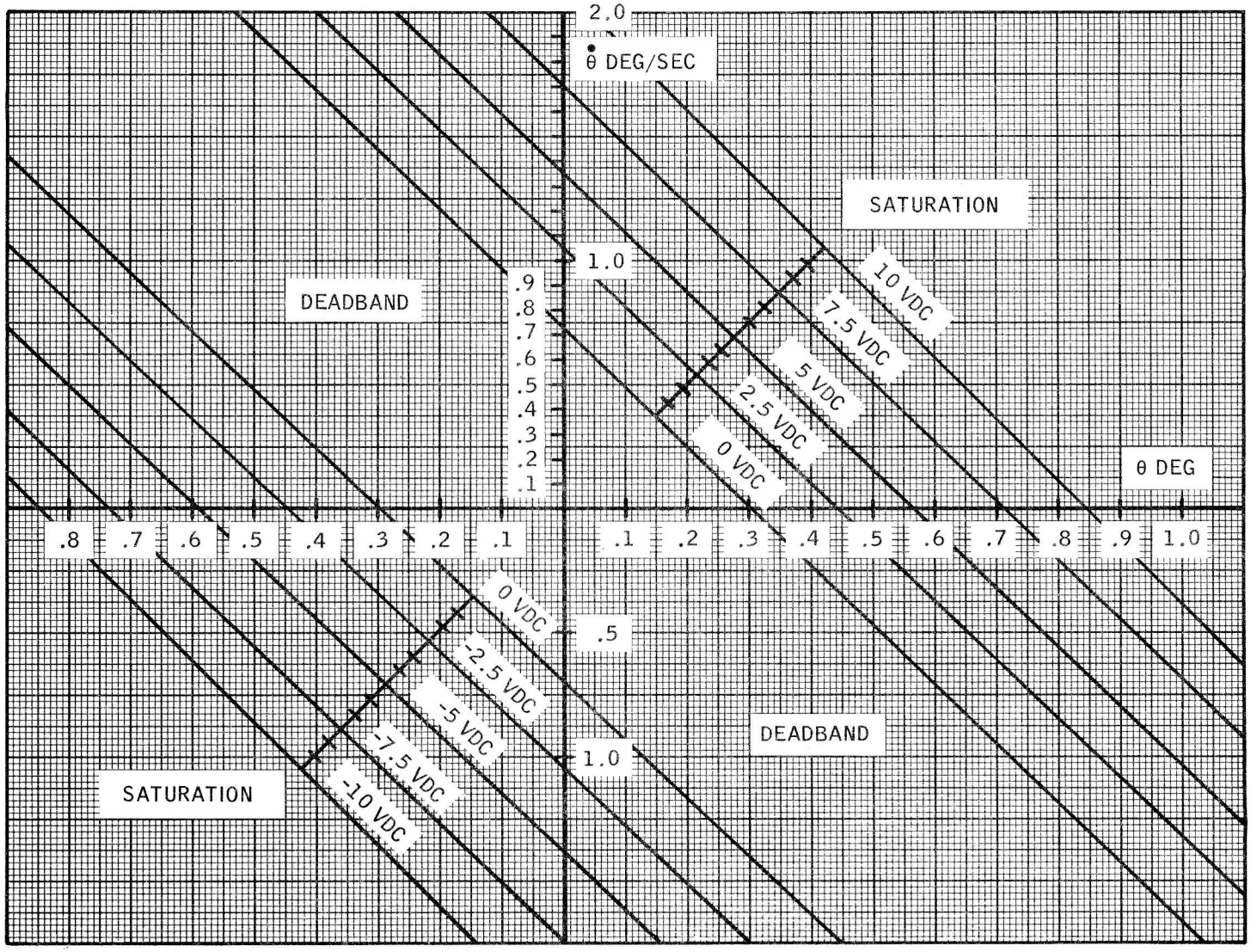

Figure 10-2.3.- AGS phase plane - narrow deadband for ascent gains.

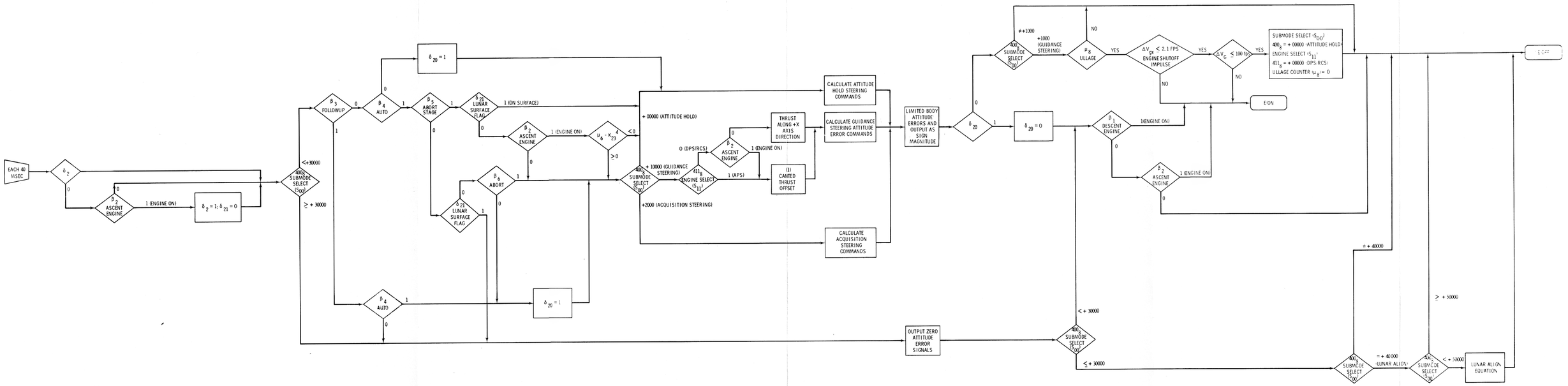

NOTE

ΔV_G	MAGNITUDE OF VELOCITY TO BE GAINED
ΔV_{SX}	X-BODY COMPONENT OF VELOCITY TO BE GAINED VECTOR

THE GREEK LETTER SCRIPT DELTA (δ) DESIGNATES THE AGA INTERNAL LOGIC FLOW FLAGS

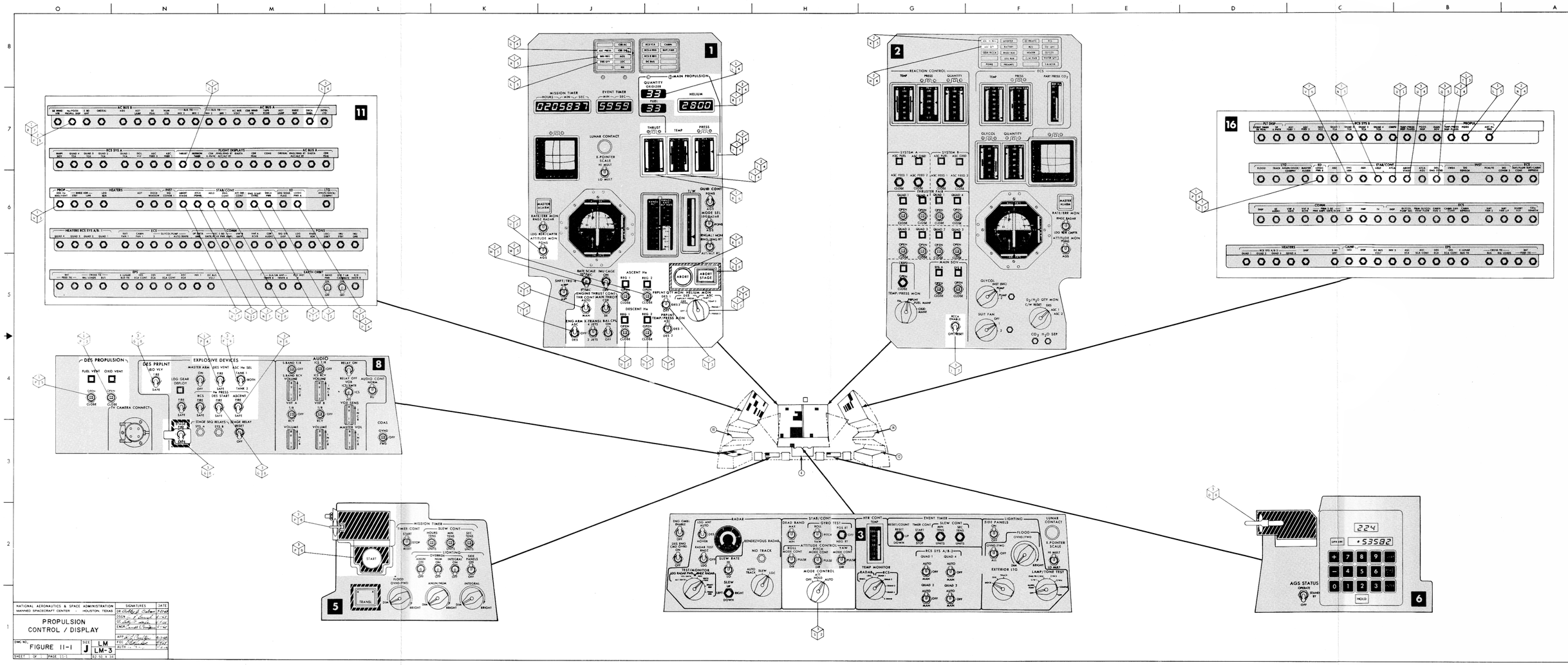

NATIONAL AERONAUTICS & SPACE ADMINISTRATION	SIGNATURES	DATE
MANNED SPACECRAFT CENTER — HOUSTON, TEXAS	DR	
	DSEA	
PROPULSION CONTROL / DISPLAY	QC	
	ENGR	
	APP'D	
DWG NO. FIGURE II-1	SIZE J	LM LM-3
SHEET 1 OF 1	PAGE II-1	82 50 X 34

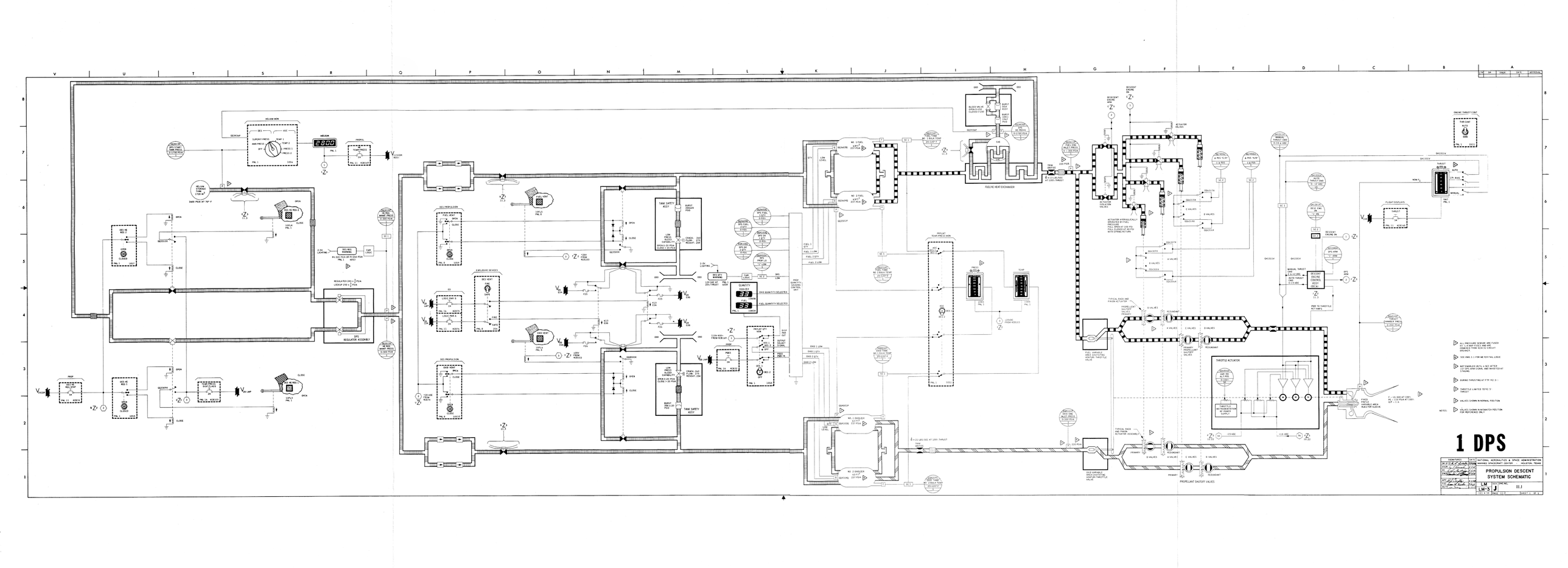
1 DPS
PROPULSION DESCENT SYSTEM SCHEMATIC
NATIONAL AERONAUTICS & SPACE ADMINISTRATION
MANNED SPACECRAFT CENTER
HOUSTON, TEXAS
LM
LM-5
J
11.1
SHEET 1 OF 4
ALL PRESSURE SENSORS ARE FUSED THROUGH A SINGLE THREE-STAGE FUSE PANEL CIRCUIT BREAKER
SEE ENG'S 1 FOR ME 1B FAIL LOGIC
NOT ENABLED UNTIL 4 SEC AFTER 161 SPS APM SIGNAL AND INVERTED AT STAGING
DURING THRUSTING AT FTP (92.5)
THROTTLE LIMITED TO 92.5% THRUST
VALVES SHOWN IN NORMAL POSITION
VALVES SHOWN IN ACTUATED POSITION FOR REFERENCE ONLY
NOTES:
HELIUM MON
HELIUM
PROPEL
HELIUM TEMPERATURE SENSOR 1 OF 2
1660 PSIA AT 70° F
SPS HE REG
DES HE REG
DES HE REG NORMAL
PC 220 PSIA OR PV 240 PSIA
REGULATED 293 ± 7 PSIA
LOCKUP 290 ± 7 PSIA
DPS REGULATOR ASSEMBLY
DES PROPULSION
FUEL HEAT EXCHANGER
OXID HEAT EXCHANGER
EXPLOSIVE DEVICES
DES HEAT
ED
LOGIC BUS A
LOGIC BUS B
TANK SAFETY ASSY
BURST DISCS 310 PSIA
LOW PRESS BLEED CHECK VALVE OPEN 6.2 PSIA CLOSE 9 PSIA
CRACK 260 PSIA FLOW 270 RESEAT 250
BURST DISCS 310 PSIA
QUANTITY SELECTED
OXID QUANTITY SELECTED
FUEL QUANTITY SELECTED
PROP QUANTITY GAGING CONTROL UNIT
OUTPUT SELECT TO DES
PROP PWR A
PROP PWR B
2-IV LIGHTING
DES SPS WARNING
LUM LOGIC
LUM LIGHTS
DPS LOW
100 SEC AT 20% THRUST
110V 400~ FROM ACB 1/4
PWR
OFF
NO. 1 FUEL 69.7 237 PSIA
NO. 2 FUEL 69.7 237 PSIA
NO. 1 OXID 69.7 237 PSIA
NO. 2 OXID 69.7 237 PSIA
NO. 1 BULK TEMP 70 ± 10° F
NO. 2 BULK TEMP 70 ± 10° F
FUEL 1 SAT
FUEL 1 LOW
FUEL 2 SAT
FUEL 2 LOW
OXID 1 LOW
OXID 2 LOW
FUELING PORT
OXIDIZER FILL AND DRAIN VALVE
FUELING PORT
FUEL FILL AND DRAIN VALVE
RESIDENT ENGINE PC
RESIDENT ENGINE PC
ACTUATOR VALVES
ACTUATOR HYDRAULICALLY OPERATED BY FUEL PRESSURE AT 220 PSI FULL FLOW AT 60 PSI WITH SPRING RETURN
ELECTRICAL A POS 1 & POS
ELECTRICAL A POS 1 & POS
ELECTRICAL A POS 1 & POS
ELECTRICAL A POS 1 & POS
A VALVES
B VALVES
C VALVES
D VALVES
TYPICAL FUEL AND OXIDIZER PROPELLANT SHUTOFF VALVES
PROPELLANT SHUTOFF VALVES
PRIMARY
REDUNDANT
FUEL VARIABLE ORIFICE THROTTLE VALVE
OXID VARIABLE ORIFICE THROTTLE VALVE
TYPICAL RACK AND PINION ACTUATOR ASSEMBLY
PROPELLANT SHUTOFF VALVES
THROTTLE ACTUATOR
THROTTLE POSITION AT POWER SUPPLY
-15 VDC
+15 VDC
FIXED VENTURI THROAT AREA INJECTOR SLEEVE
ENGINE THRUST CONT
THRUST
THR CONT
AUTO
MAN
THRUST METER
0-110 % THRUST
THRUST ENG ON
0-10 VDC
SECOND ENGINE ON
0-10 VDC
MANUAL THROTTLE CMD
0.4-3.5 VDC
AUTO THROTT CMD
0-3.5 VDC
DESCENT ENGINE CONTROL ASSY
DPS APM
PWR TO THROTTLE ACT ASM'S
FLIGHT DISPLAYS
THRUST
PNL 11
PNL 1
THRUST
0-110%
PNL 2
ENGINE FAILURE SENSING
0-200 PSIA
ENGINE FAILURE SENSING
0-200 PSIA
ENGINE FAILURE SENSING
0-200 PSIA
ENGINE FAILURE SENSING
0-200 PSIA
P = 10,000 AT 100% PC = 110 PSIA AT 100% O/F = 1.6

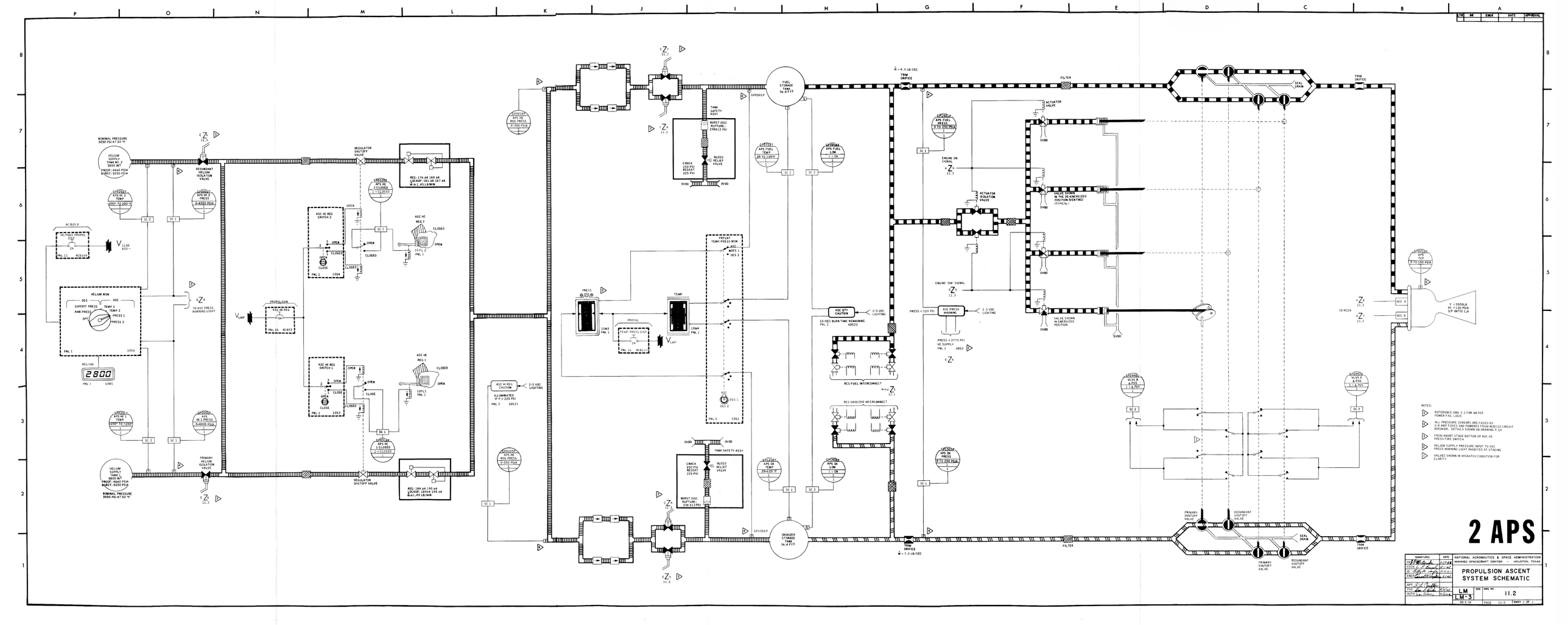

2 APS

	DATE	NATIONAL AERONAUTICS & SPACE ADMINISTRATION MANNED SPACECRAFT CENTER — HOUSTON, TEXAS
DRAWN	1-15-68	PROPULSION ASCENT SYSTEM SCHEMATIC
CHKD		
DSN		
QC		
CNFG		
APP		
FSC		LM SIZE D DWG NO. 11.2
AUTH		LM-3 REV. 14 PAGE 11-3 SHEET 1 OF 1

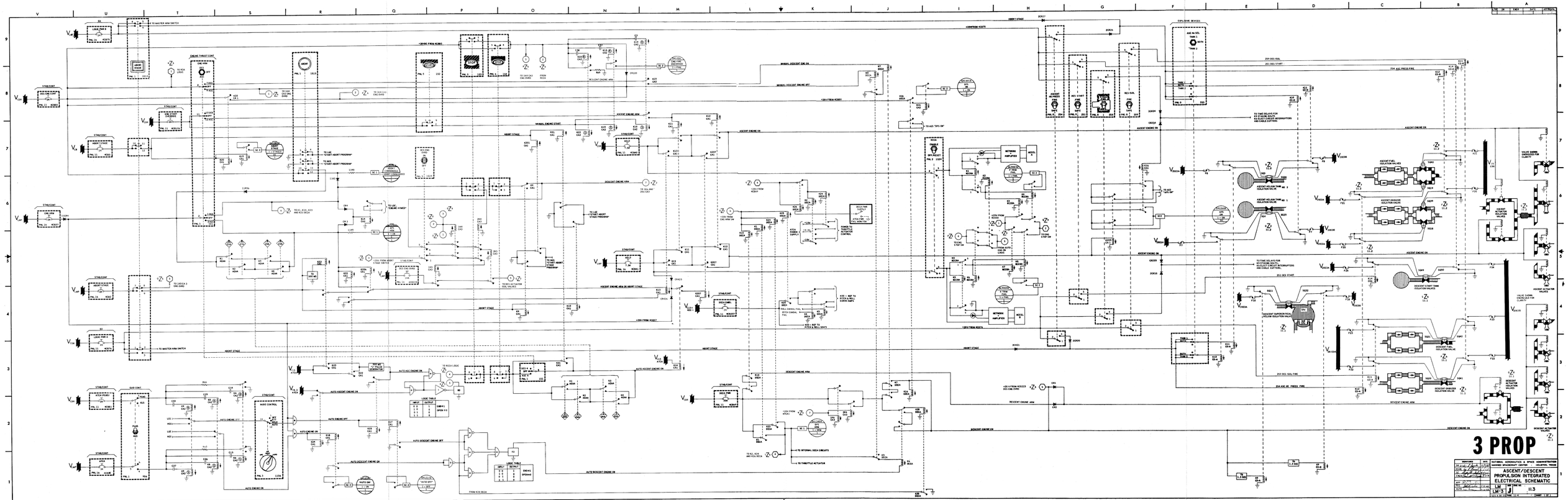
3 PROP
ASCENT/DESCENT PROPULSION INTEGRATED ELECTRICAL SCHEMATIC
NATIONAL AERONAUTICS & SPACE ADMINISTRATION
MANNED SPACECRAFT CENTER HOUSTON, TEXAS
LM-3
11.3
SHEET 12 OF 14

Notes: 1. Pressure rise during coast ≈10 PSI per hour
2. Pressure rise at end of burn ≈150 PSI per hour for 1st hour
3. During engine operation, pressure rise ≈100 PSI/min at 10% thrust

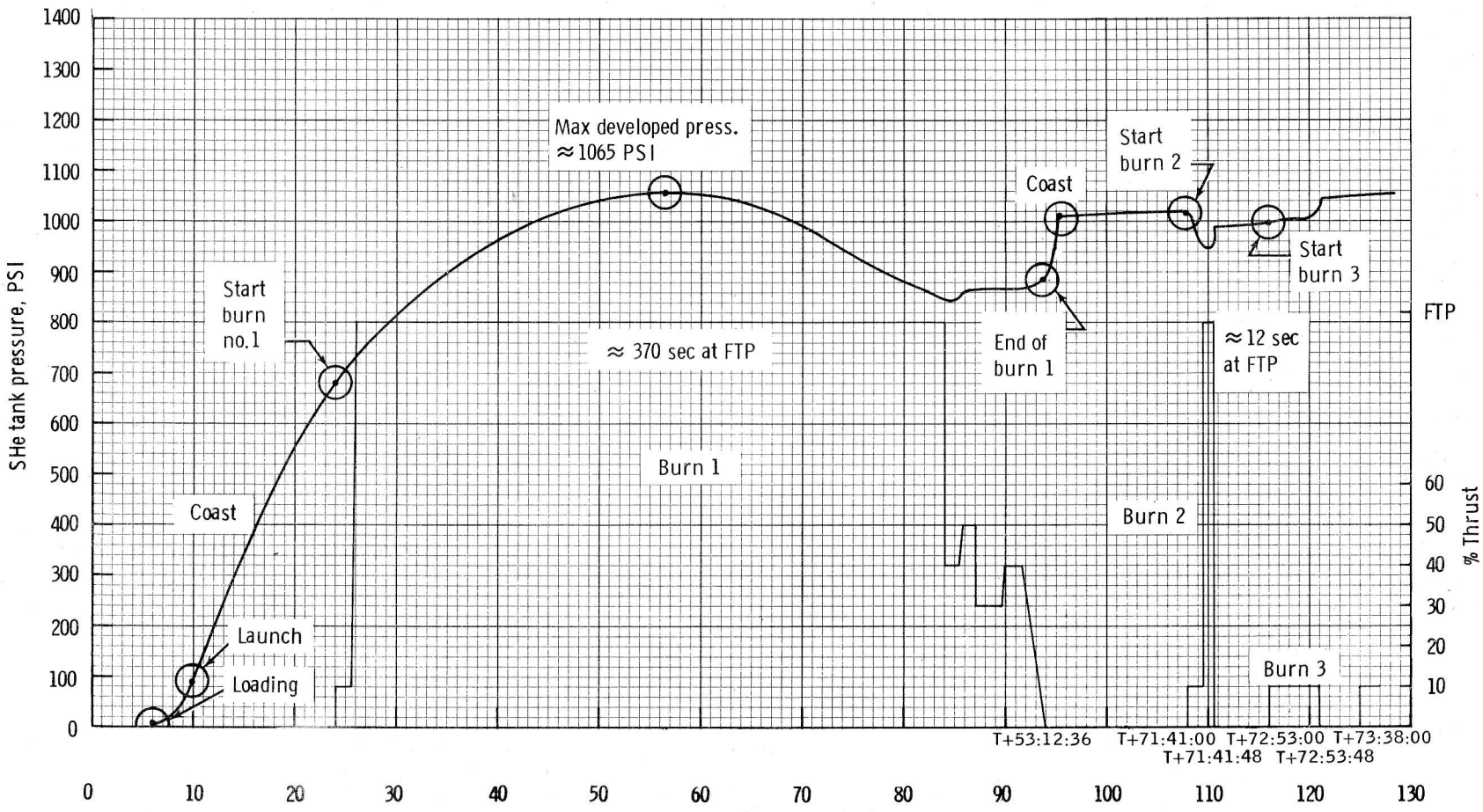

Figure 11-2. - Typical super critical Helium pressure development.

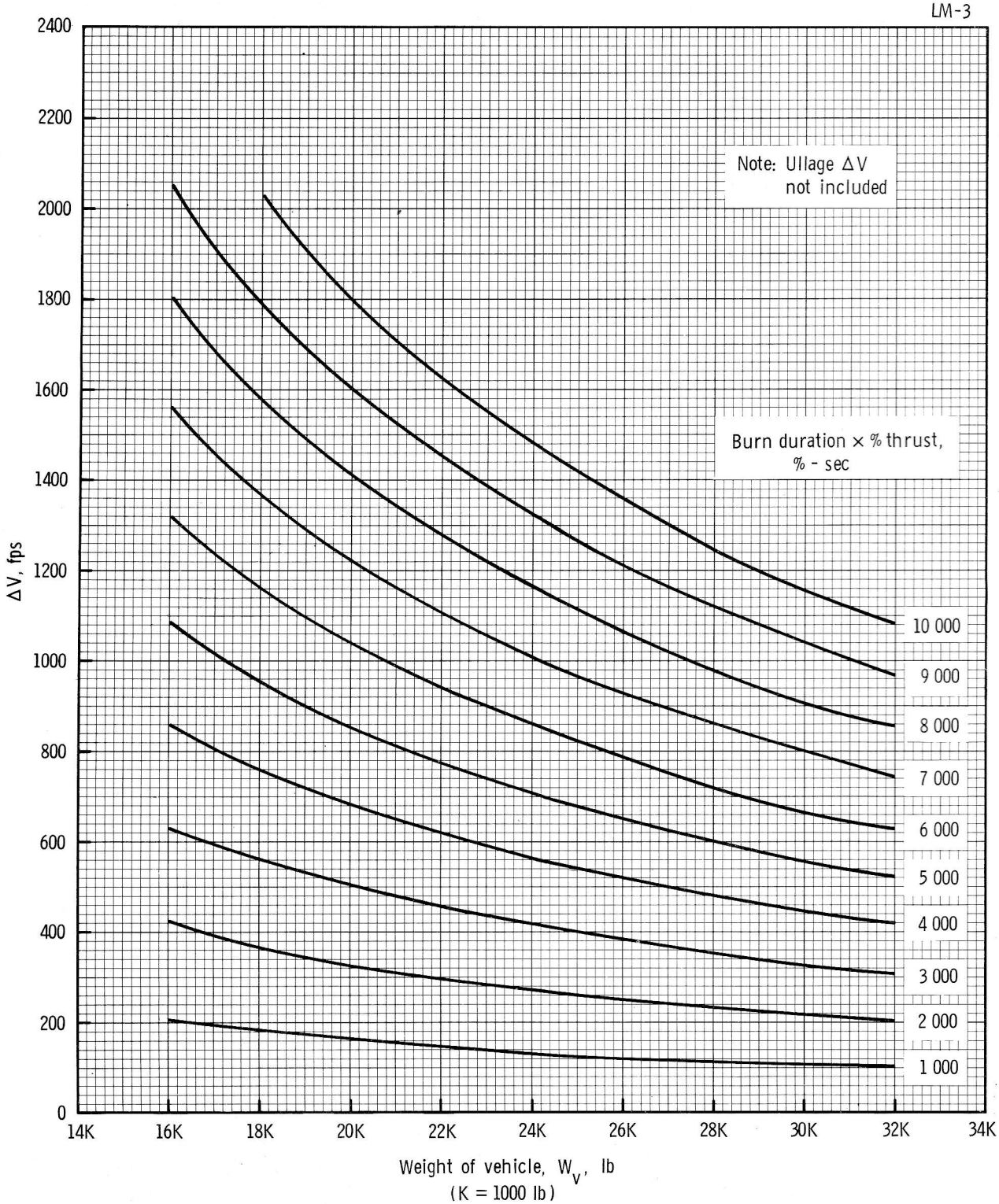

Figure 11-3.1- Descent engine - weight vs ΔV (0-2400 fps).

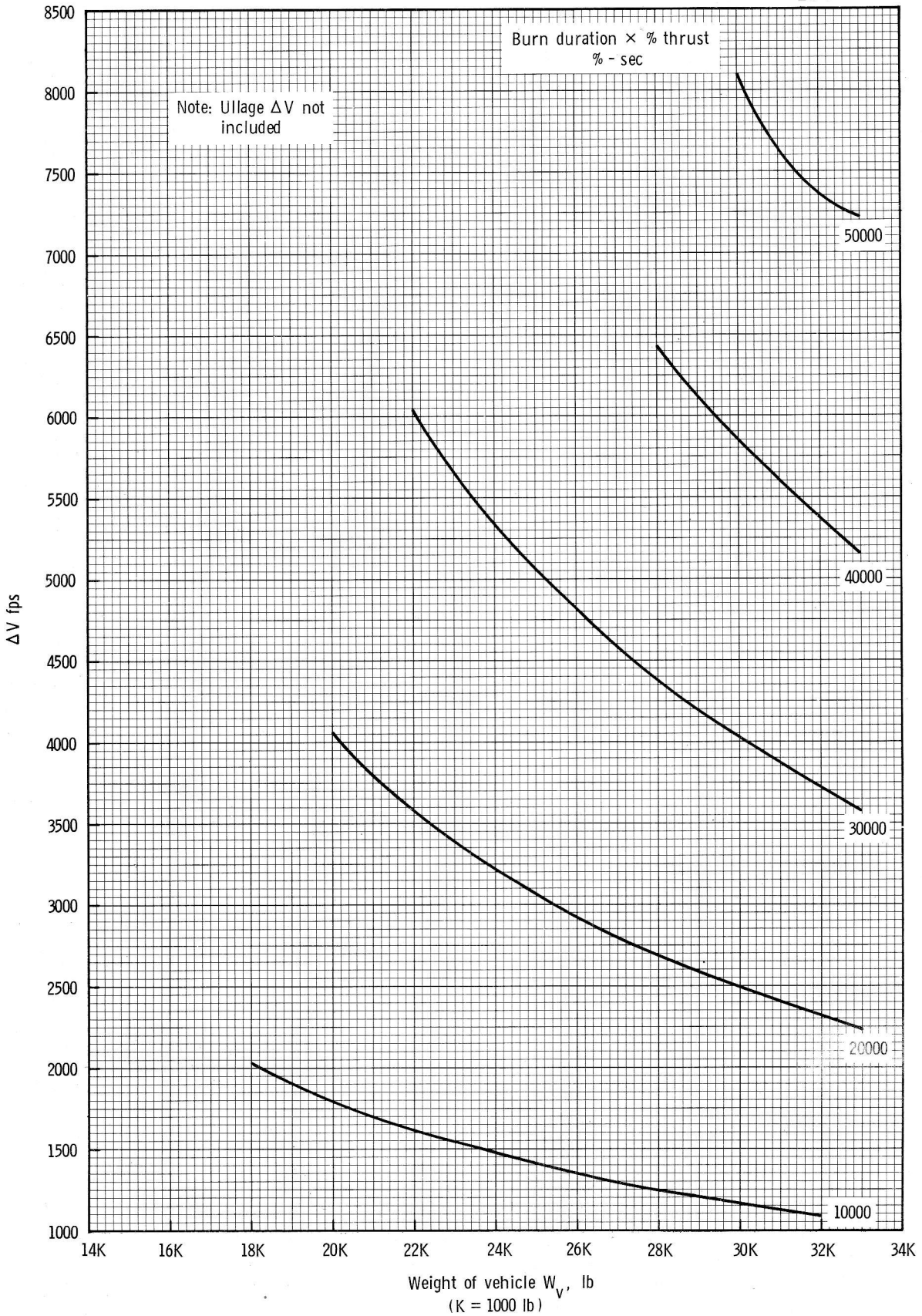

Figure 11-3.2. - Descent engine - weight vs ΔV (1000-8500 fps).

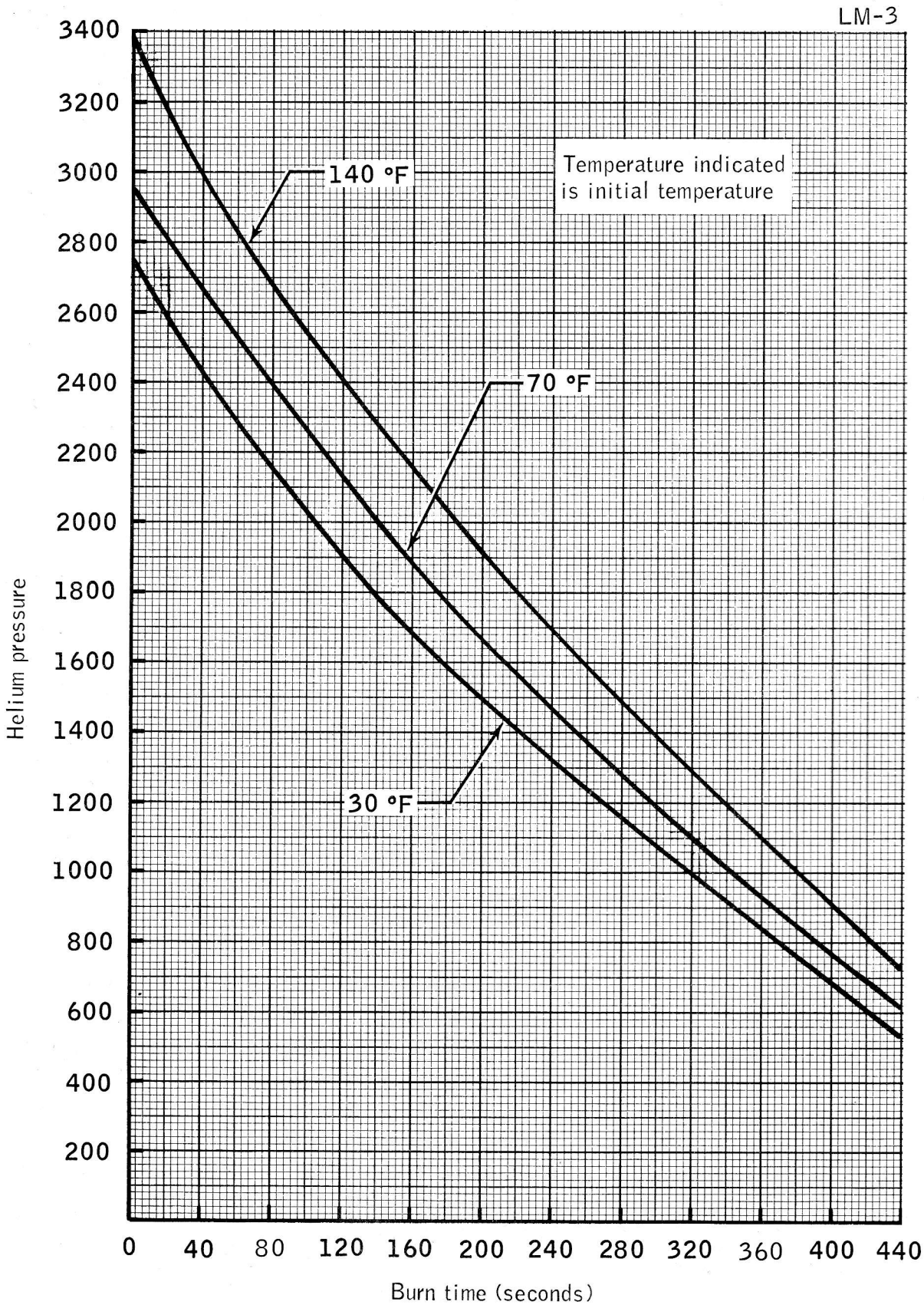

Figure 11-4.- APS He press vs burn time.

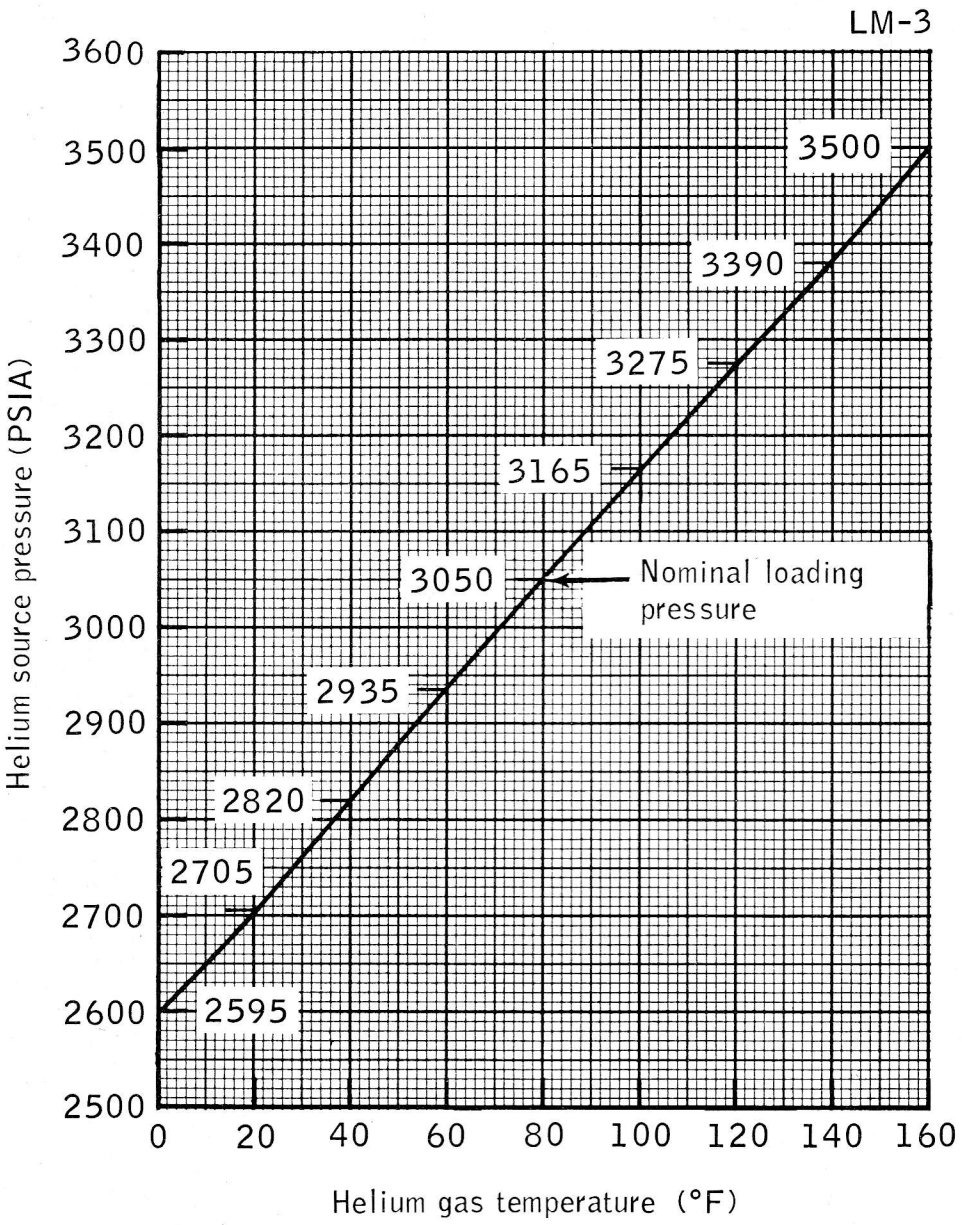

Figure 11-5.- APS - helium source pressure vs temperature.

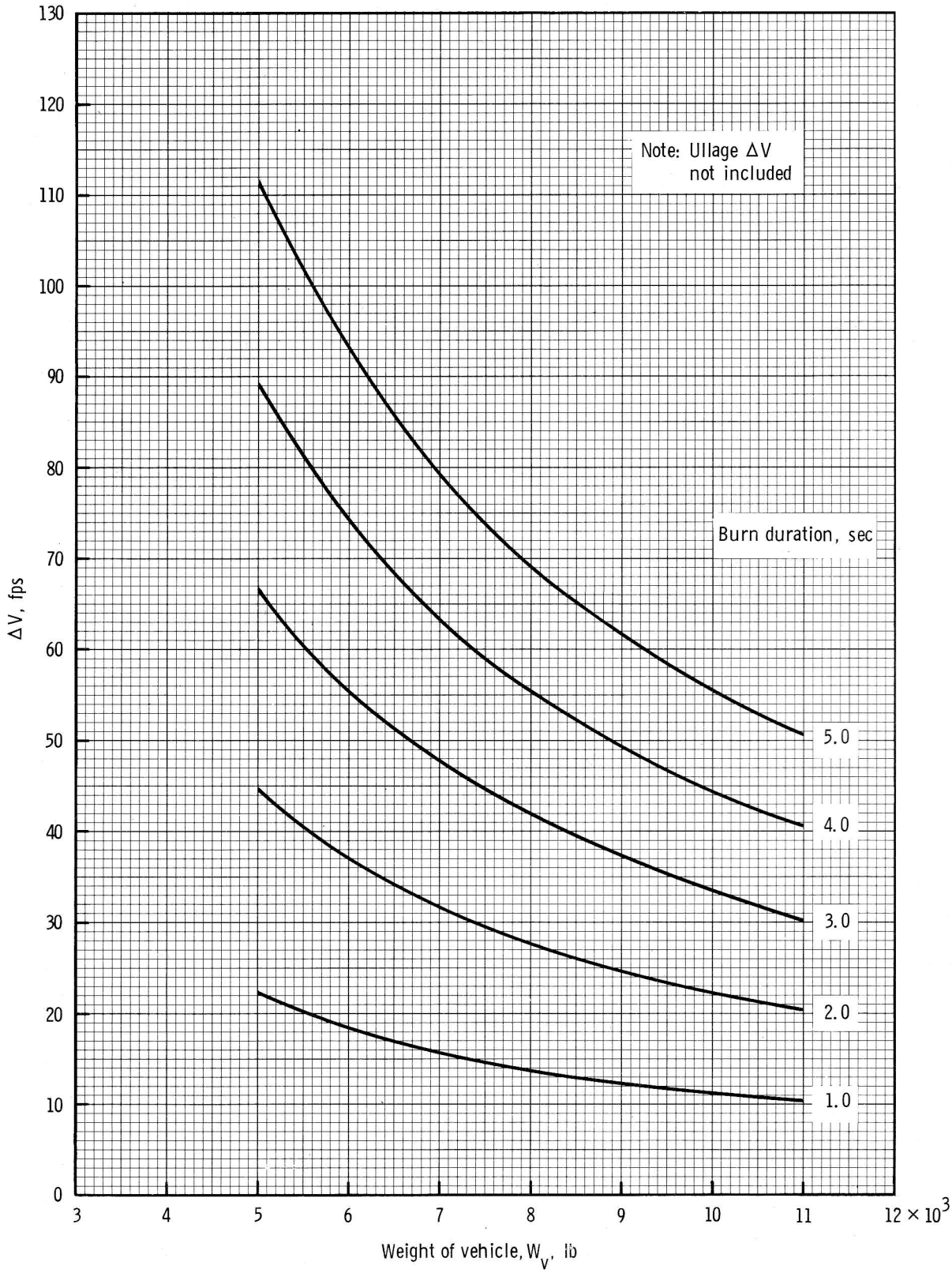

Figure 11-6.1.- Ascent engine - weight vs ΔV (1-5 sec).

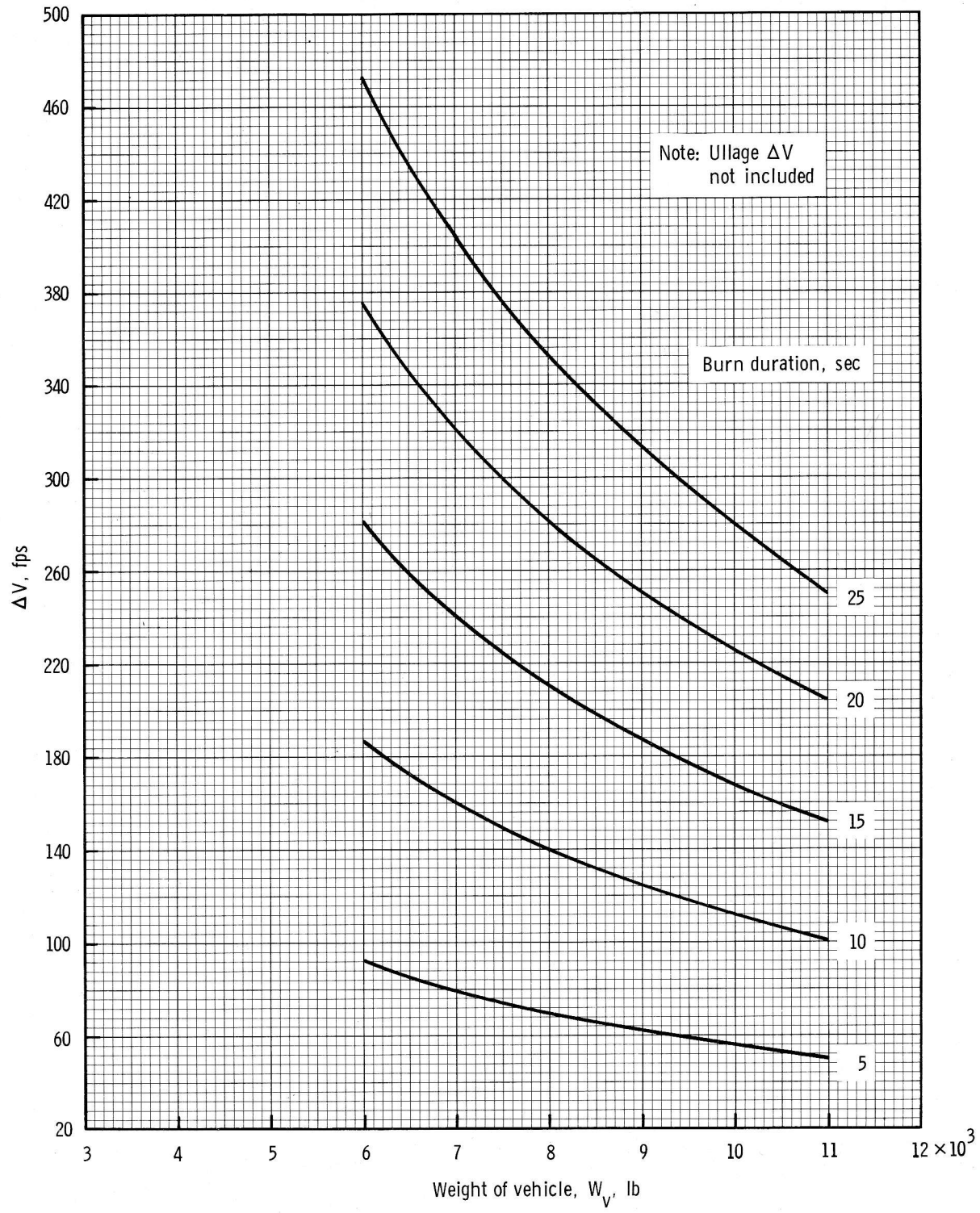

Figure 11-6.2.- Ascent engine - weight vs ΔV (5-25 sec).

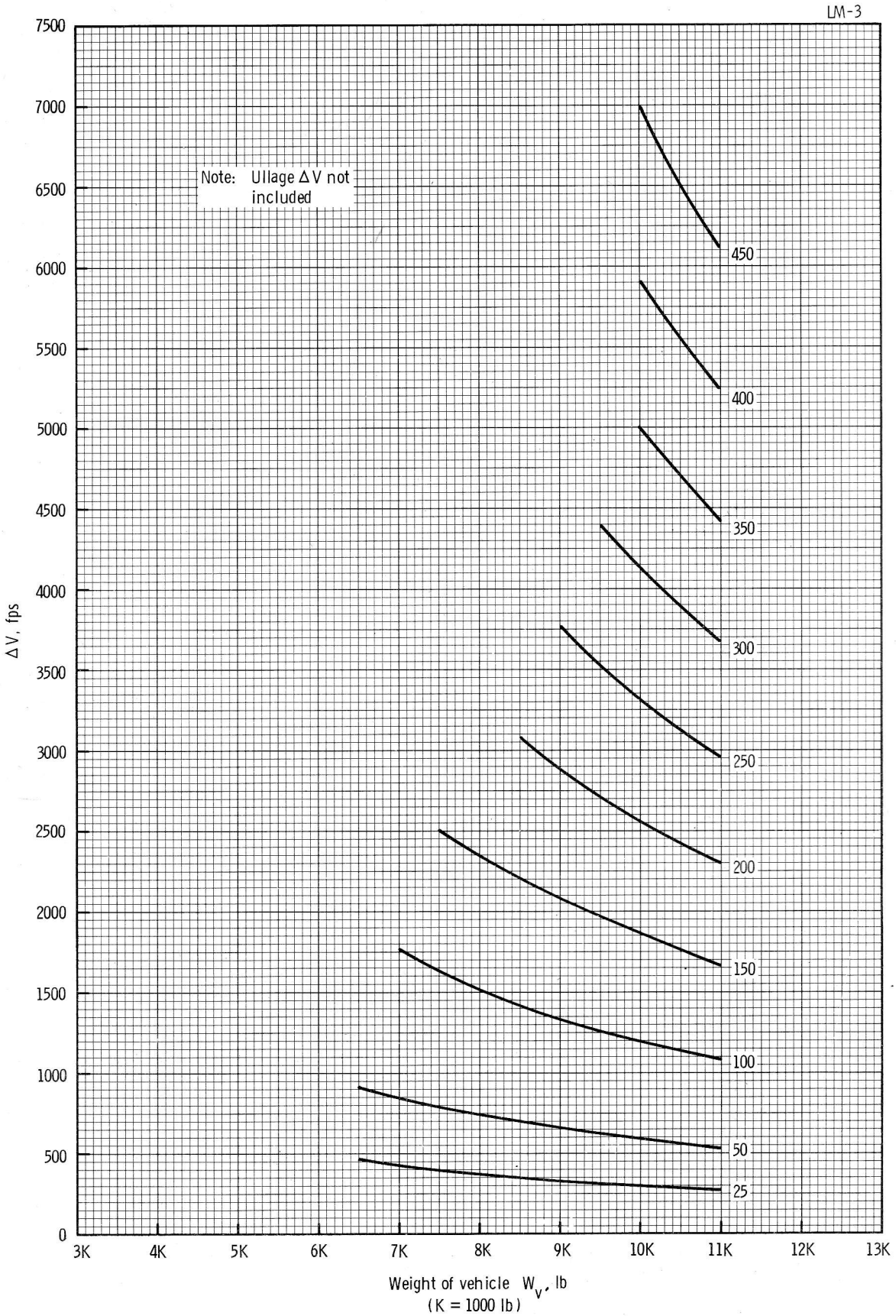

Figure 11-6. 3. - Ascent engine - weight vs ΔV (25-450 sec).

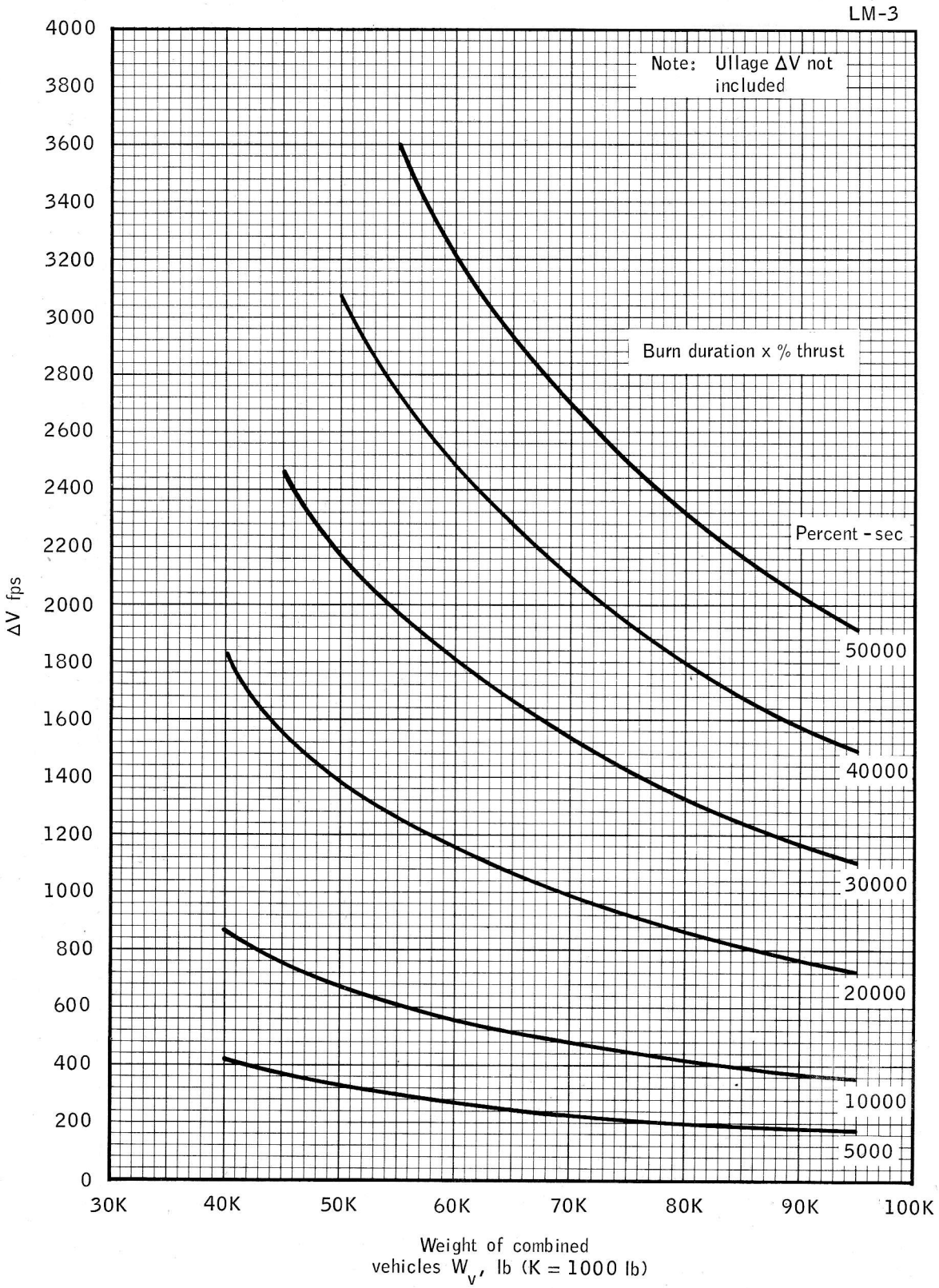

Figure 11-7.- Combined CSM/LM weight vs ΔV - descent engine.

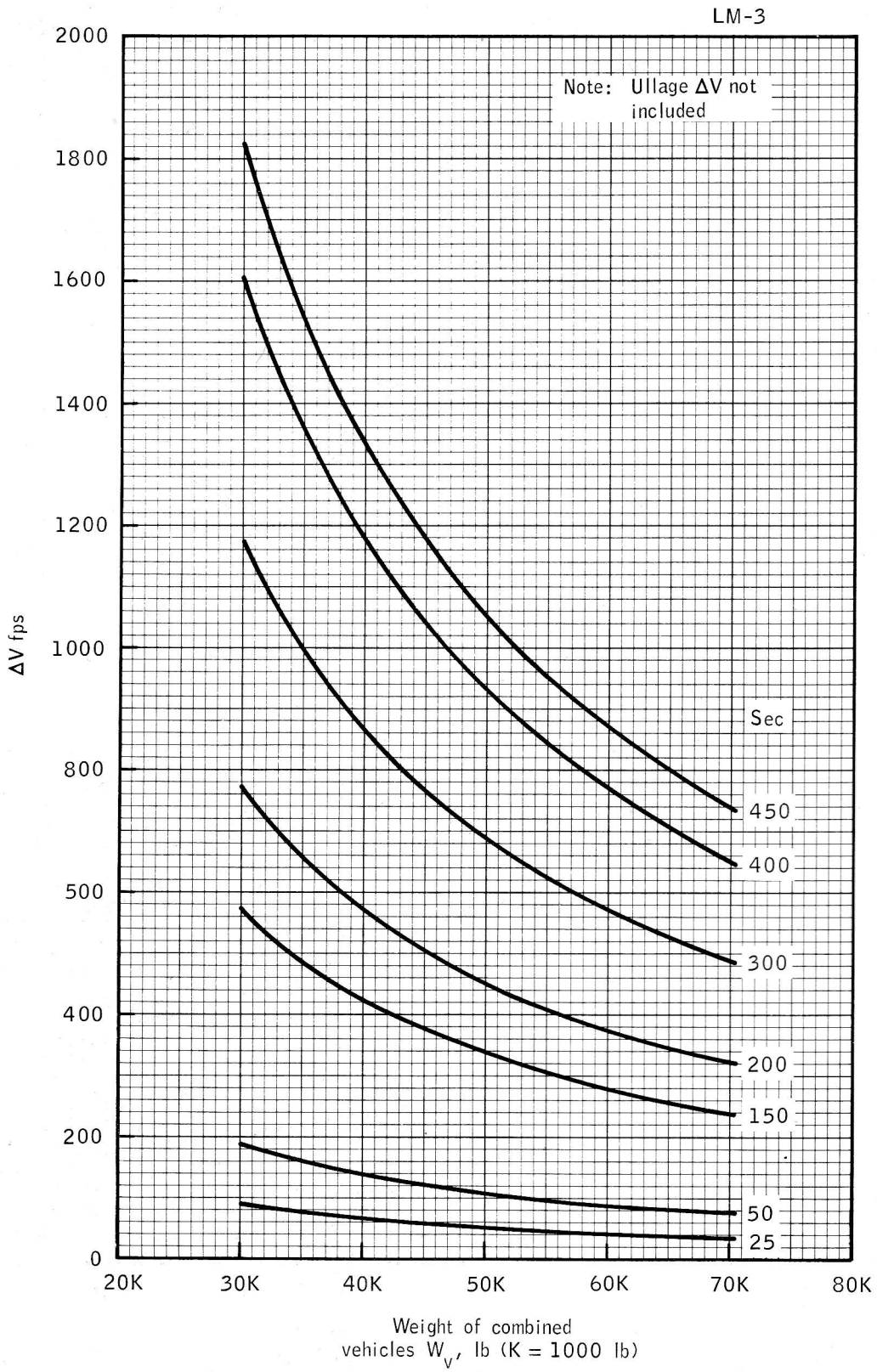

Figure 11-8.- Combined CSM/LM staged weight vs ΔV - ascent engine.

TABLE 11-I.- CAPABILITIES AND LIMITATIONS APS, DPS

*

	APS	DPS
HELIUM SOURCE PRESS.		
VOLUME	5800 IN^3	5.87 FT^3
PRESSURES		
BURST	5250 PSI	3420 PSI
PROOF	4660 PSI	2045 PSI
NOMINAL LOADED	3050 PSI	400 PSI
REGULATORS		
CONFIGURATION	SERIES/PARALLEL	PARALLEL
CLASS I		
PRIMARY		
SETTING	184±4 PSI	245±$\frac{3}{2}$ PSI
LOCKUP	MAX 203 PSI	250±$\frac{3}{2}$ PSI
SECONDARY		
SETTING	190+4 PSI	
LOCKUP	MAX 203 PSI	
CLASS II		
PRIMARY		
SETTING	176±4 PSI	245±$\frac{3}{2}$ PSI
LOCKUP	183±3 PSI	250±$\frac{3}{2}$ PSI
SECONDARY		
SETTING	182±4 PSI	
LOCKUP	189±3 PSI	
MINIMUM OPERATING PRESSURE	400 PSI	400 PSI
QUAD CHECK VALVES		
PRESSURE		
BURST	810 PSI	810 PSI
PROOF	540 PSI	540 PSI
ΔP DROP	4.5 PSI	5 PSI
CRACKING ΔP	2±.5 PSI	2±.5 PSI
COMPATIBILITY VALVES	SERIES/PARALLEL	SERIES
ACTUATION TIMES		
OPEN	0.1 SEC	0.1 SEC
PRESSURE DROP	0 PSI	0 PSI
PROOF	540 PSI	540 PSI
BURST	810 PSI	810 PSI

*

TABLE 11-I.- CAPABILITIES AND LIMITATIONS APS AND DPS - Continued

	APS	DPS
TANK ASSEMBLY		
BURST DISC RUPTURE	238±12 PSID	288±20 PSID
BLEED VALVE		
CRACK	0 PSI	0 PSI
RESEAT	80-100 PSI	20 PSI
RELIEF VALVE		
CRACK	250 PSI (MAX)	260 PSI
FULL FLOW	250 PSI	275 PSI
RESEAT	225 PSI (MIN)	254 PSI
PROP TANKS		
VOLUME		
FUEL	34 FT^3	126 FT^3
OX	34 FT^3	126 FT^3
PRESSURES		
BURST	375 PSI	405 PSI
PROOF	330 PSI	358 PSI
FUEL HELIUM HEAT EXCHANGER		
PRESSURES		
PROOF FUEL	N/A	540 PSI
HELIUM	N/A	2200 PSI
BURST FUEL	N/A	810 PSI
HELIUM	N/A	3300 PSI
ACTUATOR ISOLATION VALVES		
ACTUATION TIME		
OPEN	0.03 SEC	.03 SEC
CLOSE	0.03 SEC	0.03 SEC
ACTUATION VOLTAGE		
MAX	32V	32V
MIN	21V	21V
PRESSURES		
BURST	750 PSI	750 PSI
PROOF	500 PSI	500 PSI
PROPELLANT SHUTOFF VALVES		
ACTUATION VOLTAGE		
MAX	32V	32V
MIN	21V	21.5V

*

TABLE 11-I.- CAPABILITIES AND LIMITATIONS APS AND DPS - Concluded

PRESSURES		
OPEN		
CRACK	80 PSIA±4	60 PSI
FULL OPEN	118 PSIA±4	100 PSI
CLOSE		
START	85 PSIA±4	90 PSI
FULL CLOSE	20 PSIA±4	40 PSI
DROP		
ENGINES		
NOMINAL THRUST	3500	AT 100%, 10500-At 10%, 1050
COOLING	FILM & ABLATIVE	FILM, RADIATION, & ABLATIVE
LIFE	447 SEC	960 SEC
INJECTOR TYPE	TRIPLET ORIFICES (2 OX & 1 FUEL) IN A GRID PATTERN ON INJECTOR FACE. ON OUTER PERIPHERY ORIFICES ARE DOUBLETS (1 OX & 1 FU) TO PROVIDE REDUCED TEMP BARRIER AT ABLATIVE CHAMBER WALL	VARIABLE AREA
O/F RATIO	1.6/1	1.6/1
FLOW RATES		
OXID (LB/SEC)	7.0	~21 (MAX)
FUEL (LB/SEC)	4.3	~13 (MAX)
THRUST CHAMBER PRESSURE	118 PSI (MAX)	110 PSI
MINIMUM OPERATING TIME	1.0 SEC	N/A

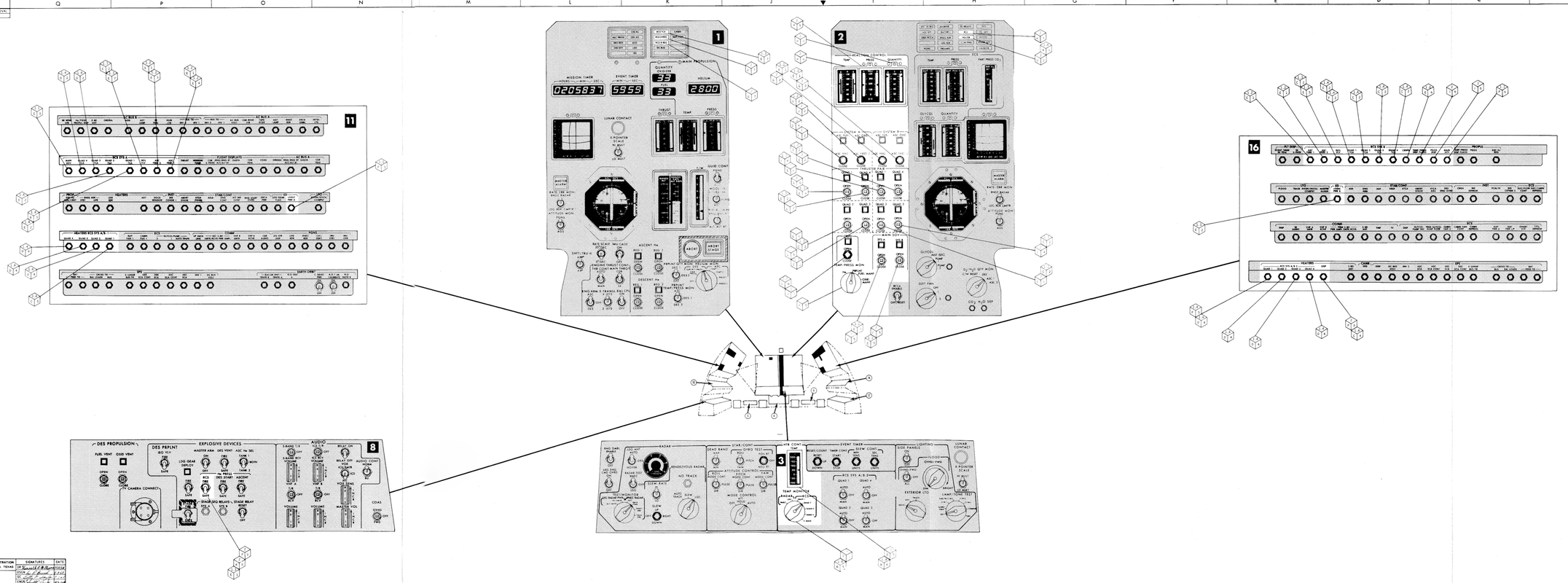

NATIONAL AERONAUTICS & SPACE ADMINISTRATION MANNED SPACECRAFT CENTER — HOUSTON, TEXAS	SIGNATURES	DATE
	DR	
	DSGN	
	ENGR	
	APP	
	AUTH	

RCS
CONTROL / DISPLAY

DWG NO. FIGURE 12-1 | SIZE J | LM LM-3 | REV

SHEET 1 OF 1 PAGE 12-1

MAIN SHUTOFF VALVES (DETAIL 1)

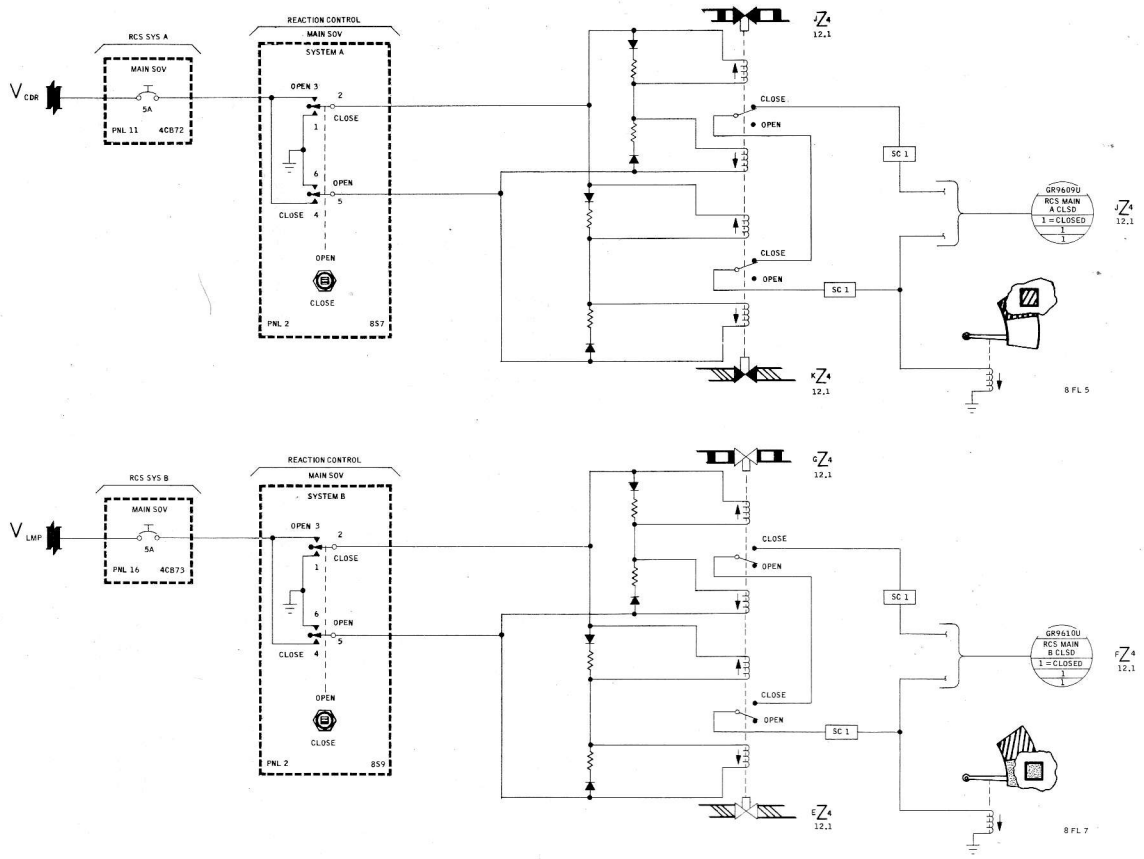

RCS PRESSURIZATION SQUIBS (DETAIL 2)

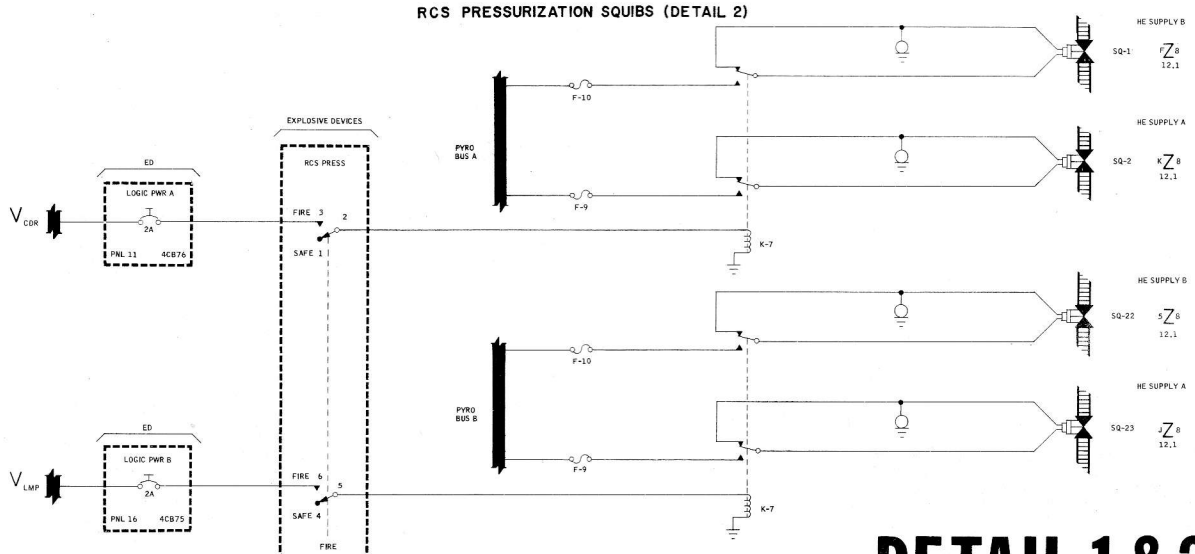

DETAIL 1&2

SIGNATURES	DATE
DR Andre A. Johnson	3-7-67
DSGN C. J. Brown	4-24
QC Leslie Wright	4-26
ENGR Robert E. Murray	4-2-68
APP R. L. Boston	4-30
FEC	4-4-68
AUTH	4-8-68

NATIONAL AERONAUTICS & SPACE ADMINISTRATION
MANNED SPACECRAFT CENTER · HOUSTON, TEXAS

RCS ELECTRICAL
DETAIL 1&2

LM
LM-3

SIZE | DWG NO. 12.1.1

30 X 40 | PAGE 12-2 | SHEET 1 OF 1

LTR	DR	ENGR	DATE	APPROVAL

CROSS FEED VALVES (DETAIL 3)

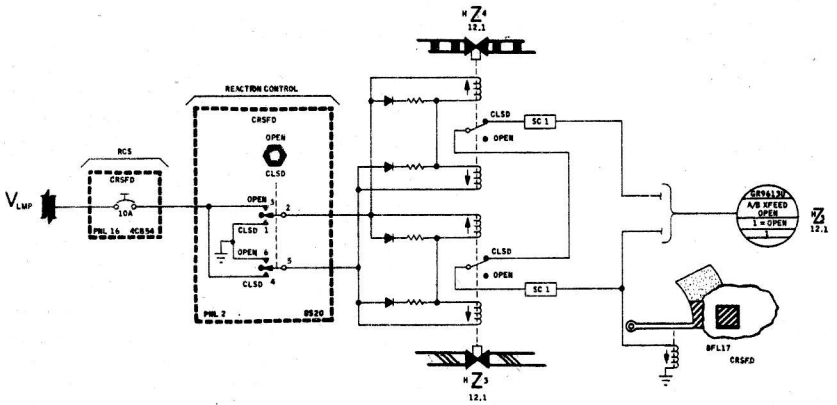

ASCENT FEED VALVES (DETAIL 4)

TYPICAL 1 OF 2

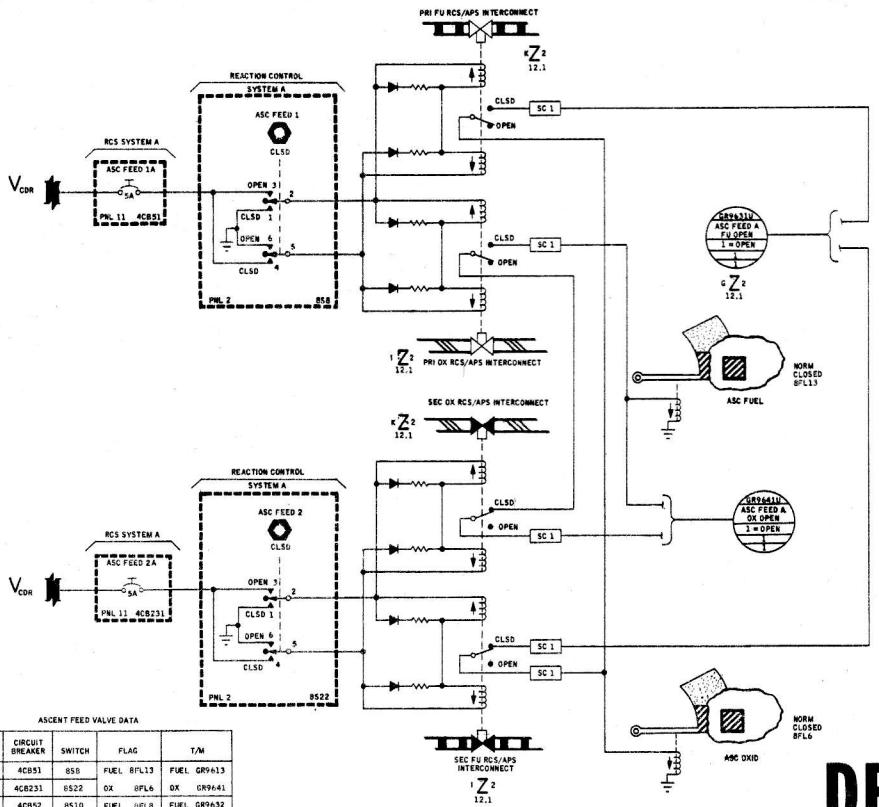

ASCENT FEED VALVE DATA

SYS	FEED	CIRCUIT BREAKER	SWITCH	FLAG	T/M
A	1	4CB51	8518	FUEL 8FL13	FUEL GR9613
A	2	4CB231	8522	OX 8FL6	OX GR9641
B	1	4CB52	8510	FUEL 8FL8	FUEL GR9632
B	2	4CB232	8523	OX 8FL19	OX GR9642

DETAIL 3 & 4

SIGNATURES	DATE
DR [illegible]	3-20-68
DSGN [illegible]	4-1-68
QC [illegible]	4-1-68
ENGR [illegible]	4-1-68
APP [illegible]	4-2-68
REC [illegible]	4/4/68
AUTH [illegible]	4-4-68

NATIONAL AERONAUTICS & SPACE ADMINISTRATION
MANNED SPACECRAFT CENTER · HOUSTON, TEXAS

RCS ELECTRICAL
DETAIL 3 AND 4

SIZE	DWG NO.
LM	12.1.2
LM-3	
30 X 35	PAGE 12-3 SHEET 1 OF 1

THRUSTER ISOL VALVE (DETAIL 5)
TYPICAL 1 OF 4

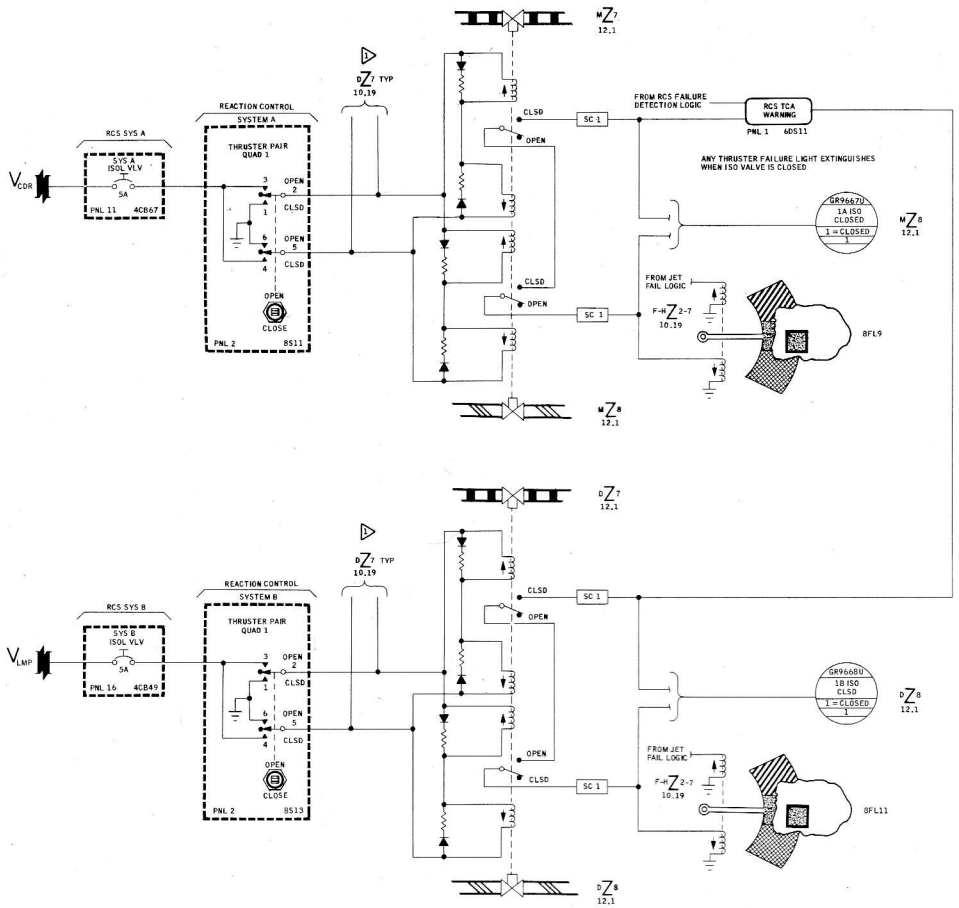

THRUSTER ISOL VALVE DATA

THRUSTERS	PNL 2 INDICATIONS		CIRCUIT BREAKER LOCATION	T/M VLVS SUMMED
	SWITCHES	FLAGS		
1B D AND S	8S13	8FL11	4CB49 PNL 16	GR9668U
1A U AND F	8S11	8FL9	4CB67 PNL 11	GR9667U
2B U AND S	8S14	8FL12	4CB49 PNL 16	GR9666U
2A D AND F	8S12	8FL10	4CB67 PNL 11	GR9665U
3B D AND F	8S17	8FL15	4CB49 PNL 16	GR9664U
3A U AND S	8S15	8FL13	4CB67 PNL 11	GR9663U
4B U AND F	8S18	8FL16	4CB49 PNL 16	GR9662U
4A D AND S	8S16	8FL14	4CB67 PNL 11	GR9661U

DETAIL 5

SIGNATURES	DATE
DR R.C. Lynch	5/29/68
DSGN G. L. Brown	4-2-68
QC Luther D. Hyde	4-1-68
ENGR Robert S. Thomas	4/2/68
APP R. J. Coultas	4-3-68
FEC Glen H. Smith	4-1-68
AUTH G. Brown	4-3-68

NATIONAL AERONAUTICS & SPACE ADMINISTRATION
MANNED SPACECRAFT CENTER · HOUSTON, TEXAS

RCS ELECTRICAL
DETAIL 5

LM
LM-3
SIZE J
DWG NO. 12.1.3
30 X 40 PAGE 12-4 SHEET 1 OF 1

RCS QUAD HEATERS (DETAIL 6)

TYPICAL 1 OF 4

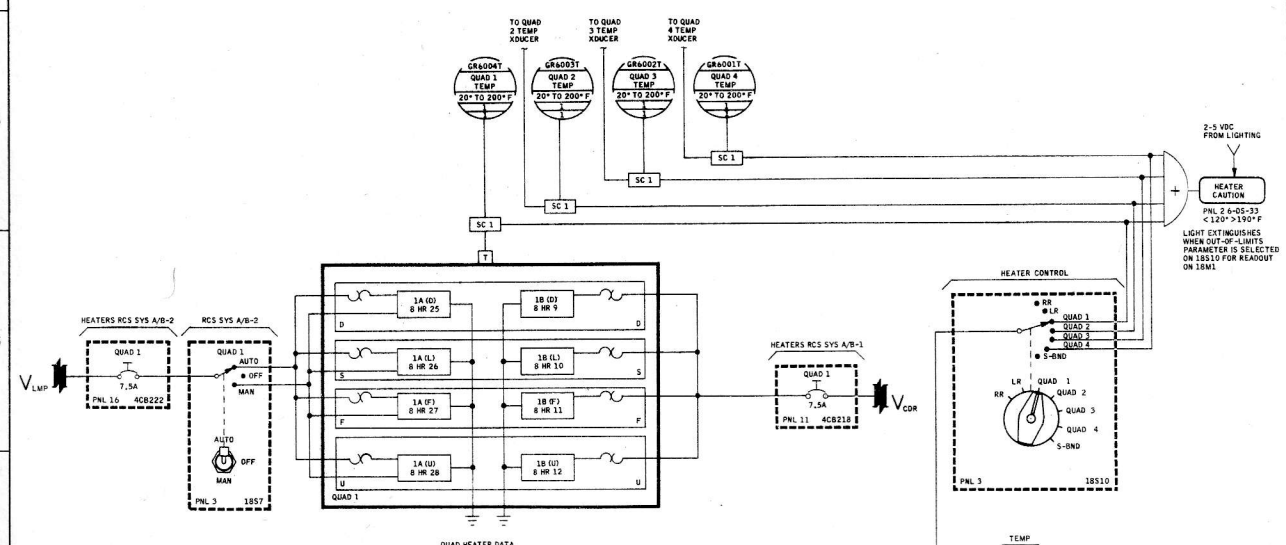

QUAD HEATER DATA

QUAD	CIRCUIT BREAKER	PANEL	THRUSTER D	THRUSTER S	THRUSTER F	THRUSTER U	QUAD TEMP
1A 1B	4CB222 4CB218	16 10	8 HR 25 9 HR 9	LEFT 8 HR 26 8 HR 10	FORWARD 8 HR 27 8 HR 11	8 HR 28 8 HR 12	GR6004T
2A 2B	4CB223 4CB219	16 10	8 HR 29 8 HR 13	LEFT 8 HR 30 8 HR 14	AFT 8 HR 31 8 HR 15	8 HR 32 8 HR 16	GR6003T
3A 3B	4CB224 4CB220	16 10	8 HR 36 8 HR 20	RIGHT 8 HR 35 8 HR 19	AFT 8 HR 34 8 HR 18	8 HR 33 8 HR 17	GR6002T
4A 4B	4CB225 4CB221	16 10	8 HR 40 8 HR 24	RIGHT 8 HR 39 8 HR 23	FORWARD 8 HR 38 8 HR 22	8 HR 37 8 HR 21	GR6001T

THRUSTER BIPROP VALVE (DETAIL 7)

TYPICAL 1 OF 4

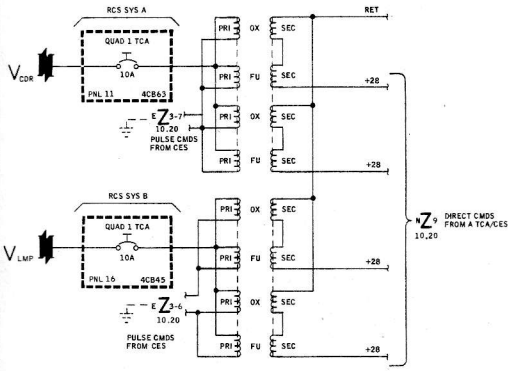

THRUSTER BIPROP DATA

QUAD	CDR CB PNL 11 SYS A	LMP CB PNL 16 SYS B
1	4CB03	4CB45
2	4CB62	4CB44
3	4CB61	4CB43
4	4CB60	4CB42

DETAIL 6&7

SIGNATURES	DATE	NATIONAL AERONAUTICS & SPACE ADMINISTRATION
DR J. L. Hamby	3-6-68	MANNED SPACECRAFT CENTER · HOUSTON, TEXAS
DSGN C. A. Lee	3-6-68	RCS ELECTRICAL DETAIL 6 AND 7
QC Billy D. Hyde	3-7-68	
ENGR R. S. Hanna	3-29-68	
APP R. P. Parten	3-4-68	LM / LM-3 — SIZE J — DWG NO. 12.1.4
FEC John E. Smith	3-7-68	
AUTH W. Bray	3-29-68	30 X 35 — PAGE 12-5 — SHEET 1 OF 1

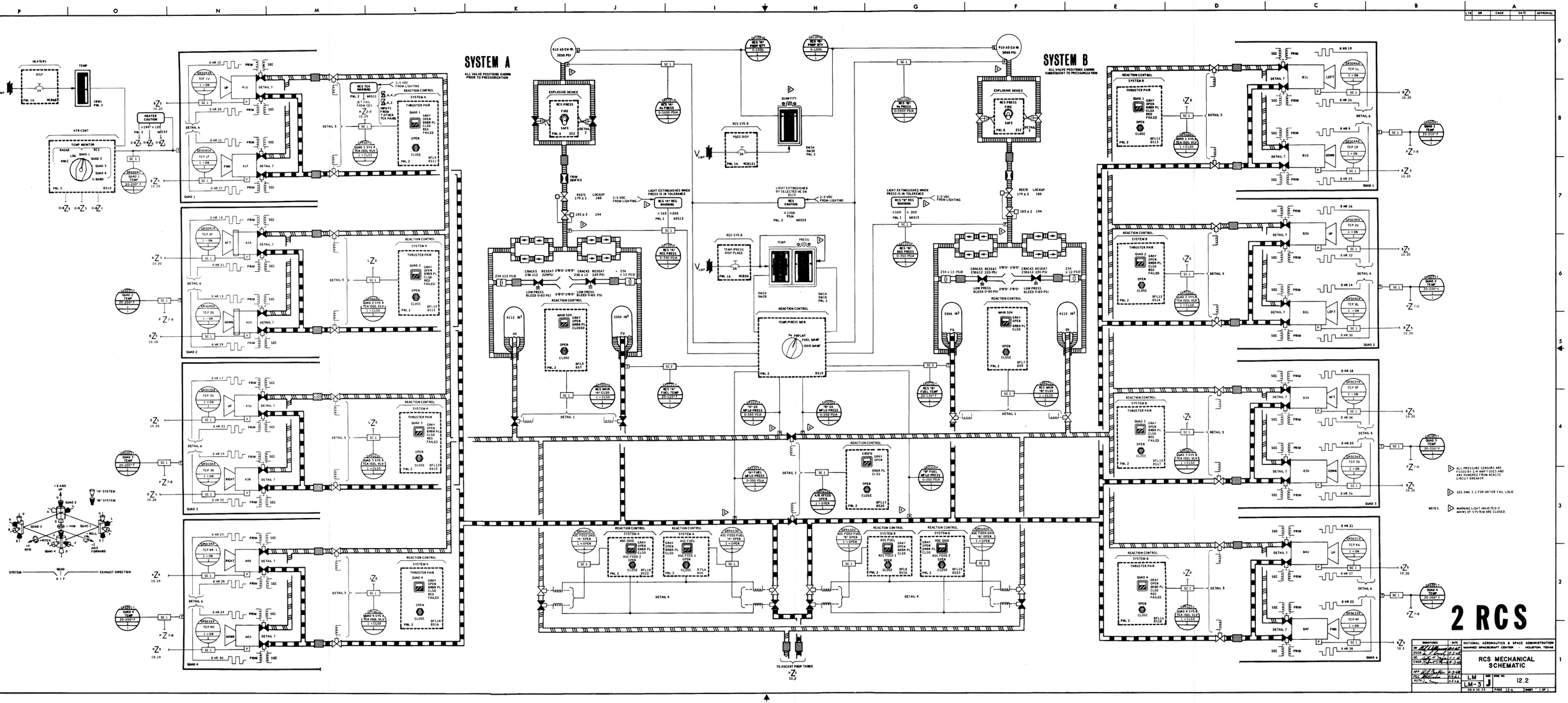
SYSTEM A
ALL VALVE POSITIONS SHOWN PRIOR TO PRESSURIZATION
SYSTEM B
ALL VALVE POSITIONS SHOWN SUBSEQUENT TO PRESSURIZATION
HEATERS
TEMP
HEATER CAUTION
TEMP MONITOR
HTR CONT
QUAD 1
QUAD 2
QUAD 3
QUAD 4
REACTION CONTROL
SYSTEM A THRUSTER PAIR
SYSTEM B THRUSTER PAIR
EXPLOSIVE DEVICE
RCS PRESS
TRIM ORIFICE
LOW PRESS BLEED 0-60 PSI
REACTION CONTROL
TEMP/PRESS MON
MAIN SOV
RCS "A" REG PRESS
RCS "B" REG PRESS
RCS "A" FUEL TEMP
RCS "B" FUEL TEMP
RCS "A" MANF PRESS
RCS "B" MANF PRESS
RCS "A" FUEL MANF PRESS
RCS "B" FUEL MANF PRESS
RCS "A" OXID MANF PRESS
RCS "B" OXID MANF PRESS
RCS "A" OXID TEMP
RCS "B" OXID TEMP
RCS "A" HE PRESS
RCS "B" HE PRESS
RCS "A" REG WARNING
RCS "B" REG WARNING
RCS CAUTION
RCS TCA WARNING
ASC FEED QUAD
ASC FEED FUEL
ASC FEED OXID
ASC FEED 1
ASC FEED 2
TO ASCENT PROP TANKS
ALL PRESSURE SENSORS ARE FUSED BY 3/4 AMP FUSES AND ARE POWERED FROM RCS132 CIRCUIT BREAKER
SEE DWG 3.1 FOR METER FAIL LOGIC
WARNING LIGHT INHIBITED IF MAIN SOV OF SYSTEM ARE CLOSED.
NOTES:
2 RCS
RCS MECHANICAL SCHEMATIC
NATIONAL AERONAUTICS & SPACE ADMINISTRATION
MANNED SPACECRAFT CENTER - HOUSTON, TEXAS
LM
LM-3J
12.2

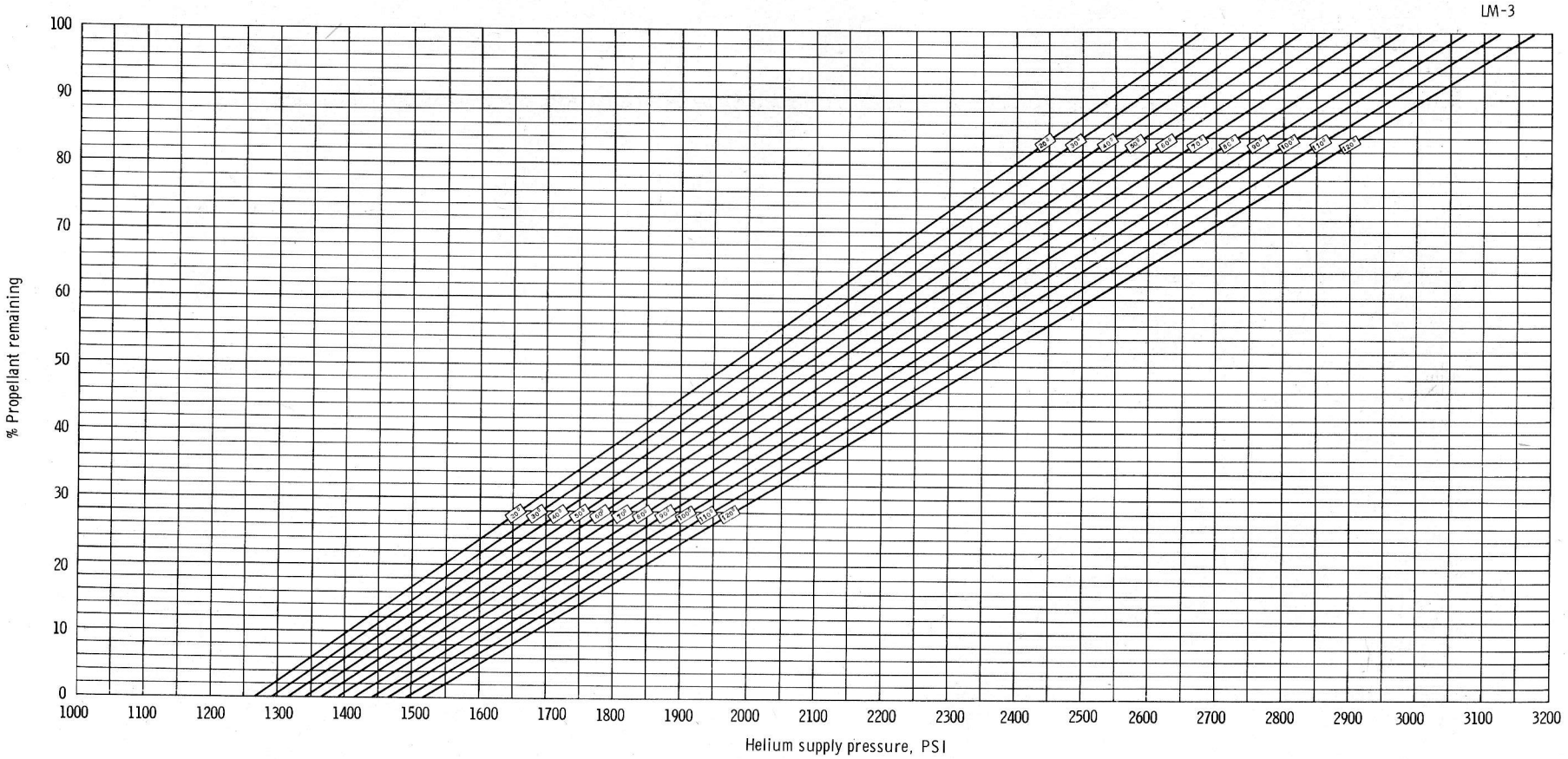

Figure 12-2. - RCS propellant remaining.

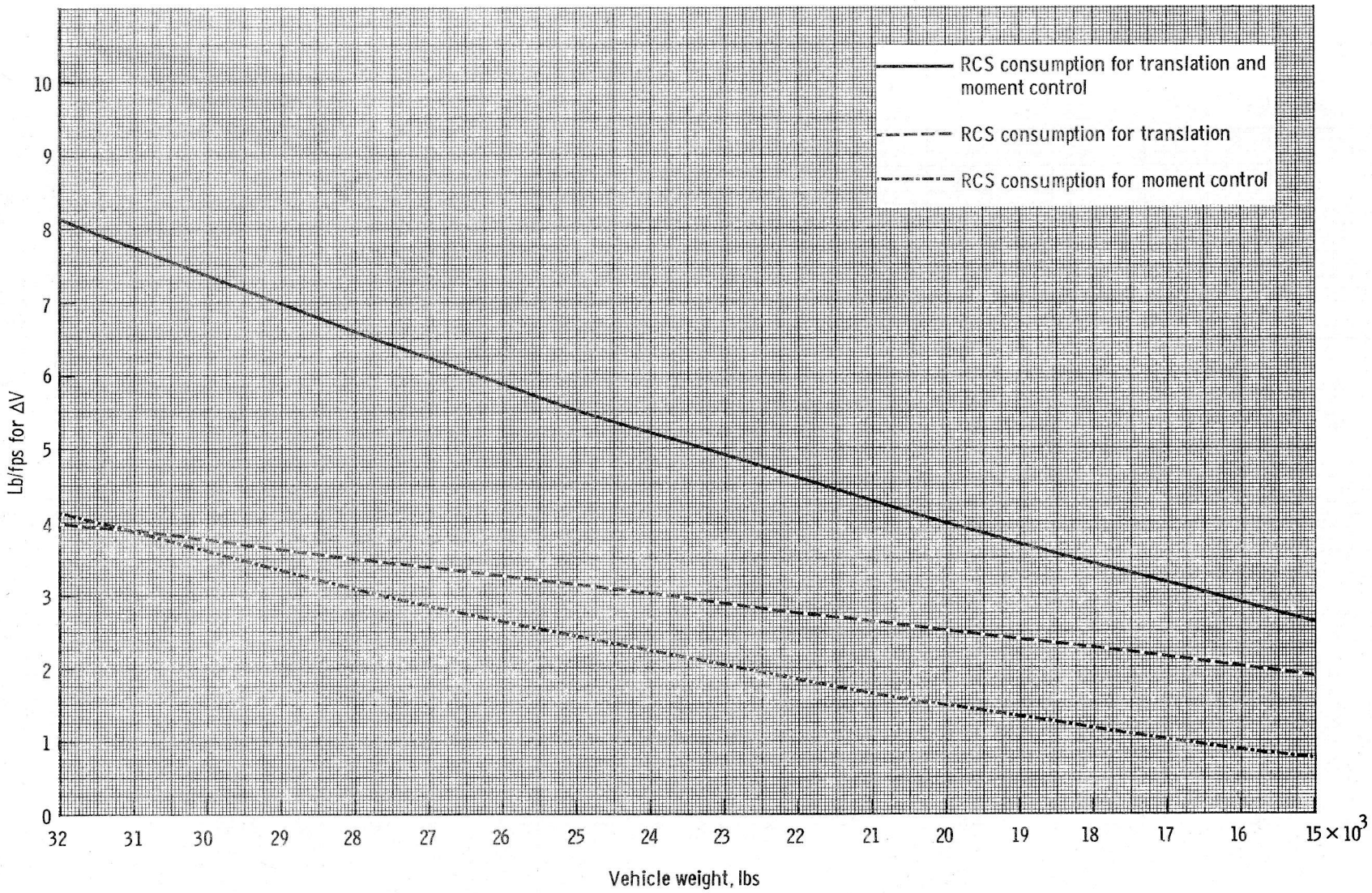

Figure 12-3. - Propellant consumption for translation (unstaged).

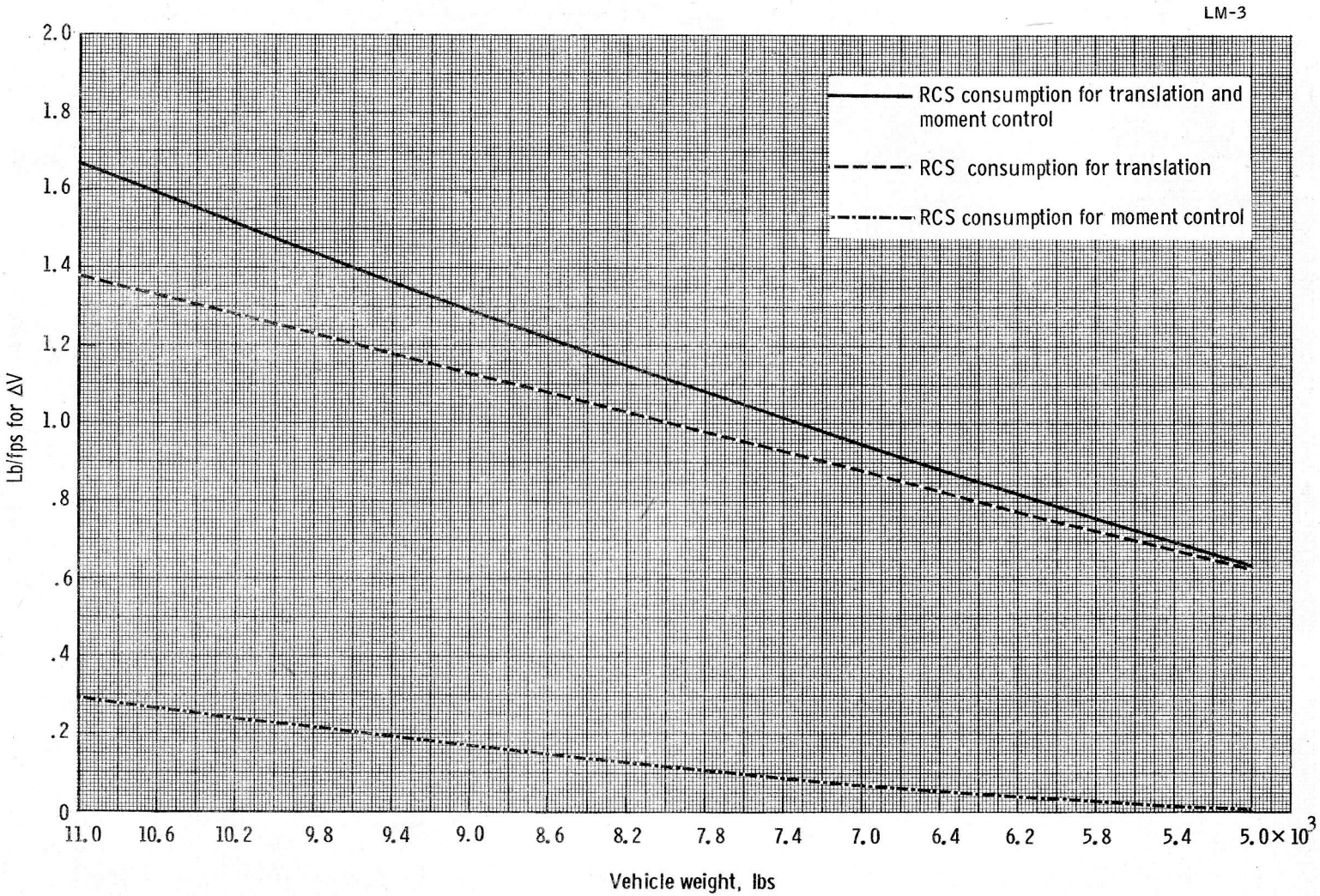

Figure 12-4. - Propellant consumption for translation (staged) in Y and Z axis (2 thrusters on for translation).

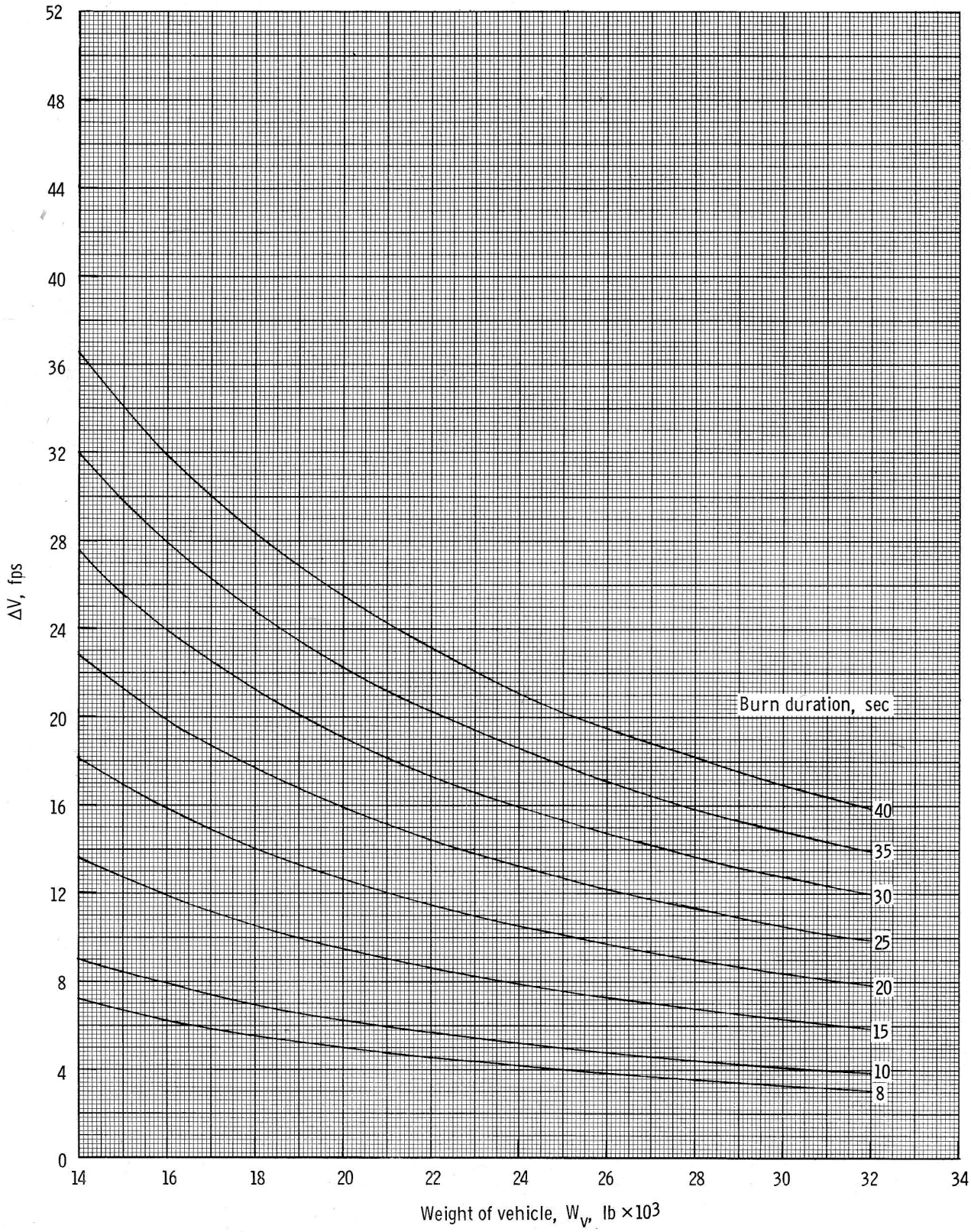

Figure 12-5. 1. - Vehicle weight vs ΔV (8-40 secs). Unstaged 4-jet translation.

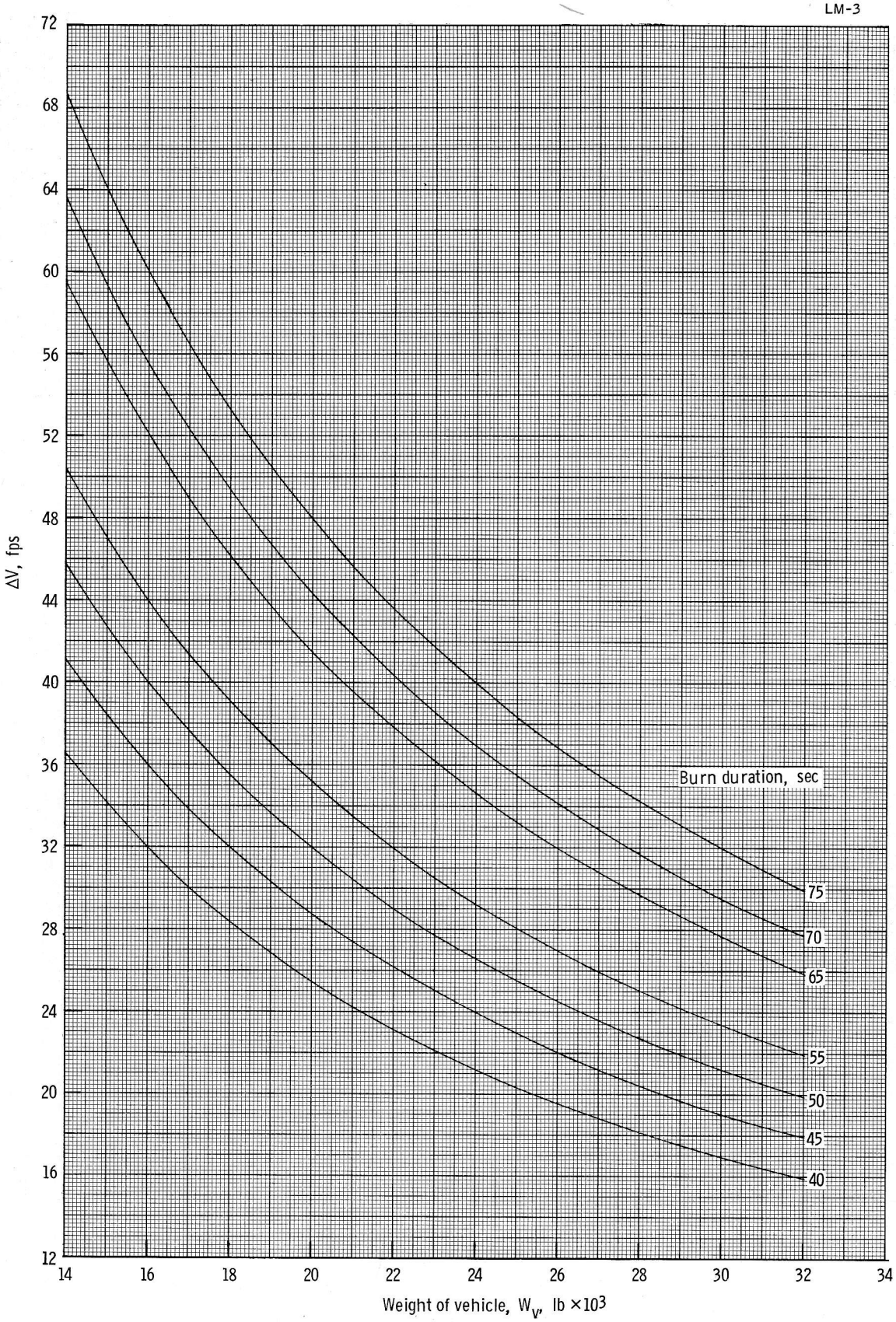

Figure 12-5. 2. - Vehicle weight vs ΔV (40-75 secs). Unstaged 4-jet translation.

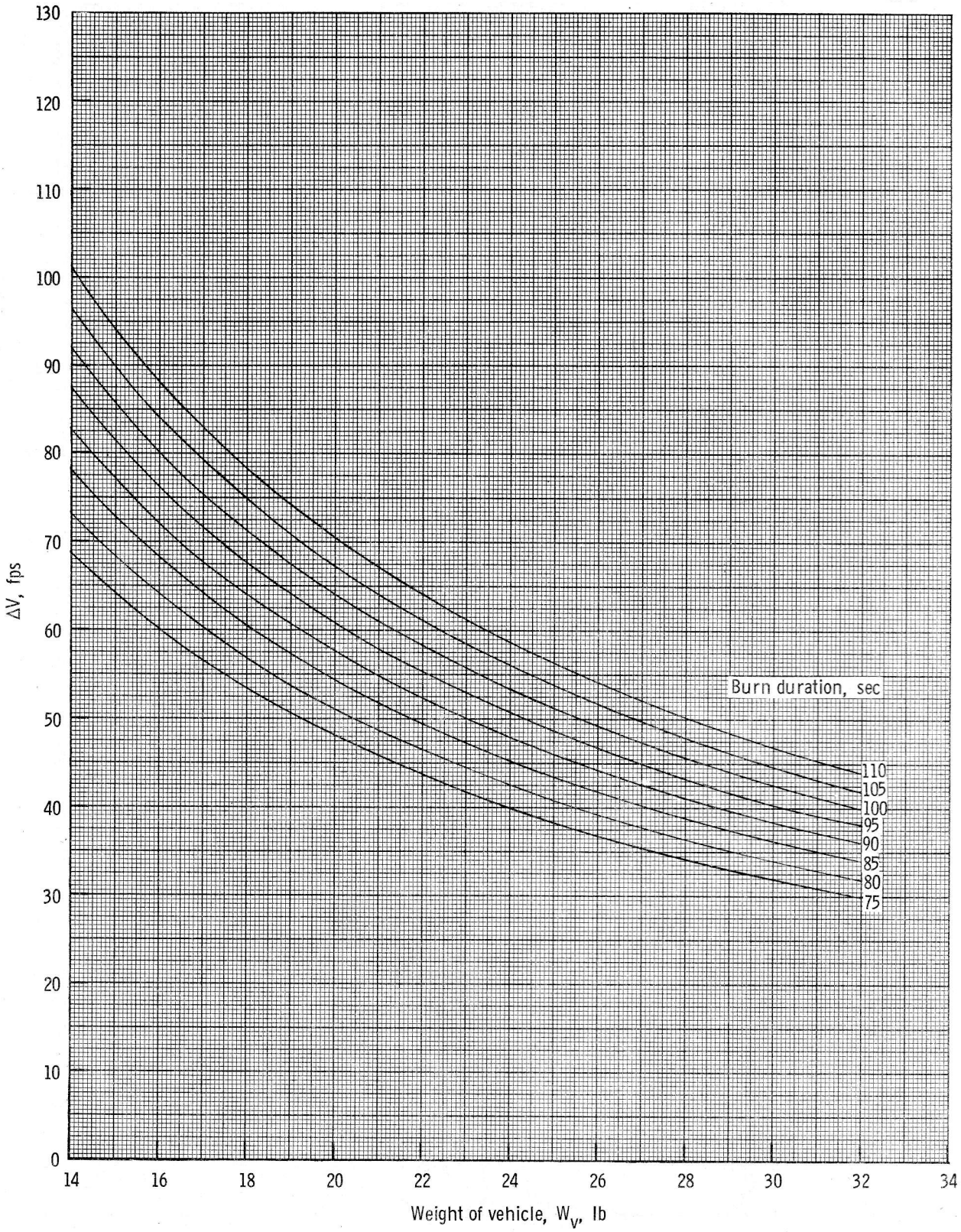

Figure 12-5. 3. - Vehicle weight vs ΔV (75-110 secs). Unstaged 4-jet translation.

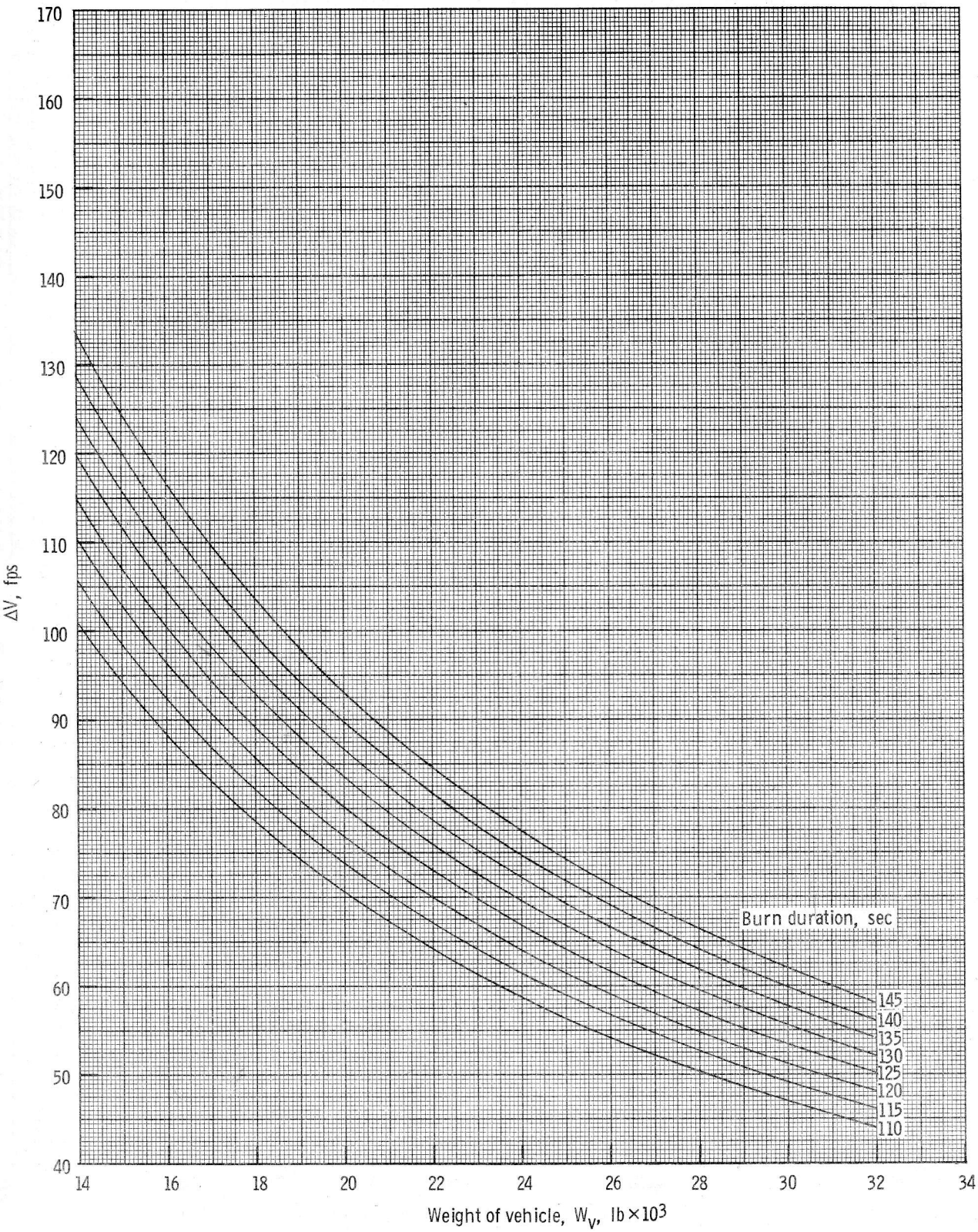

Figure 12-5. 4. - Vehicle weight vs ΔV (110-145 secs). Unstaged 4-jet translation.

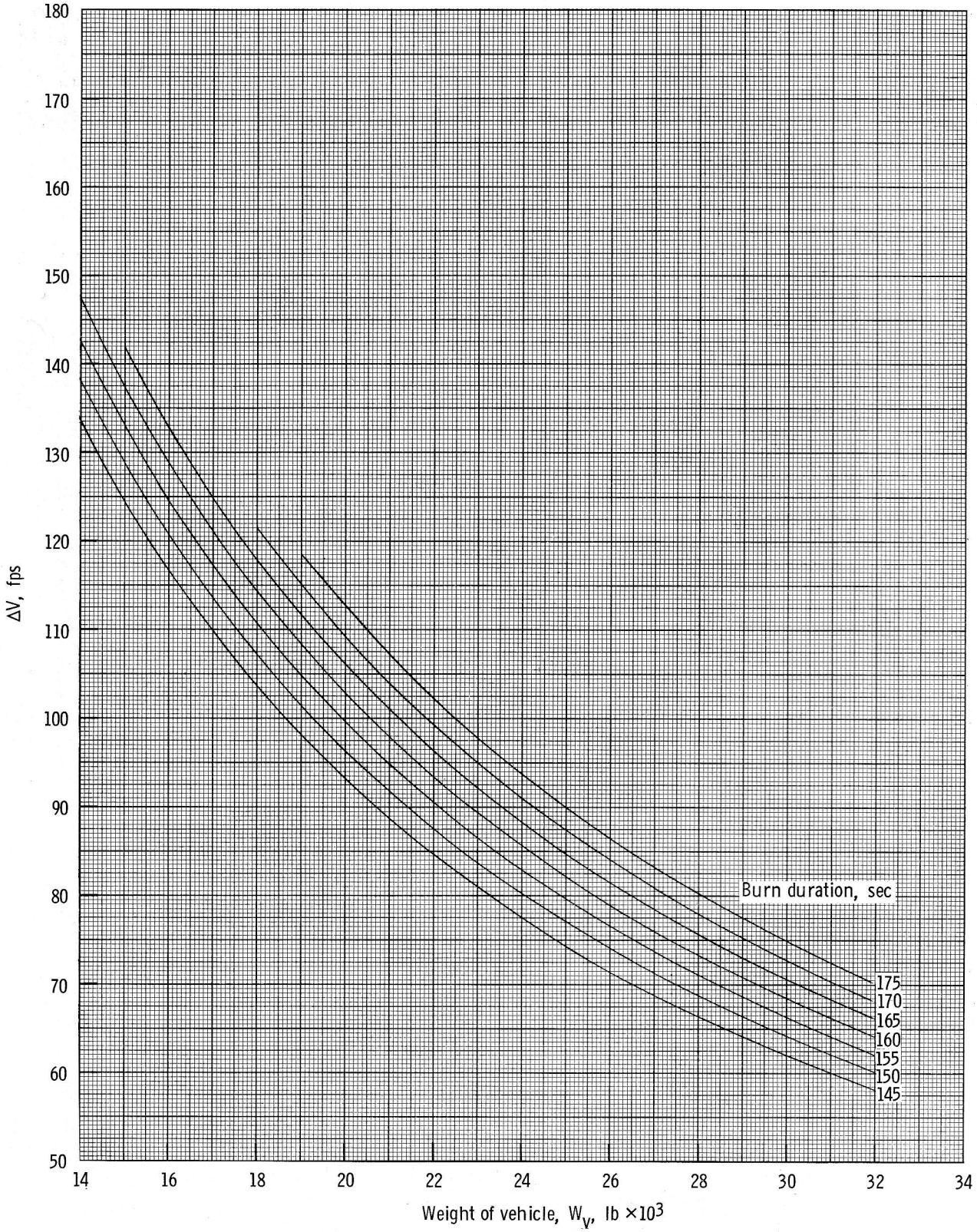

Figure 12-5.5. - Vehicle weight vs ΔV (145-175 secs). Unstaged 4-jet translation.

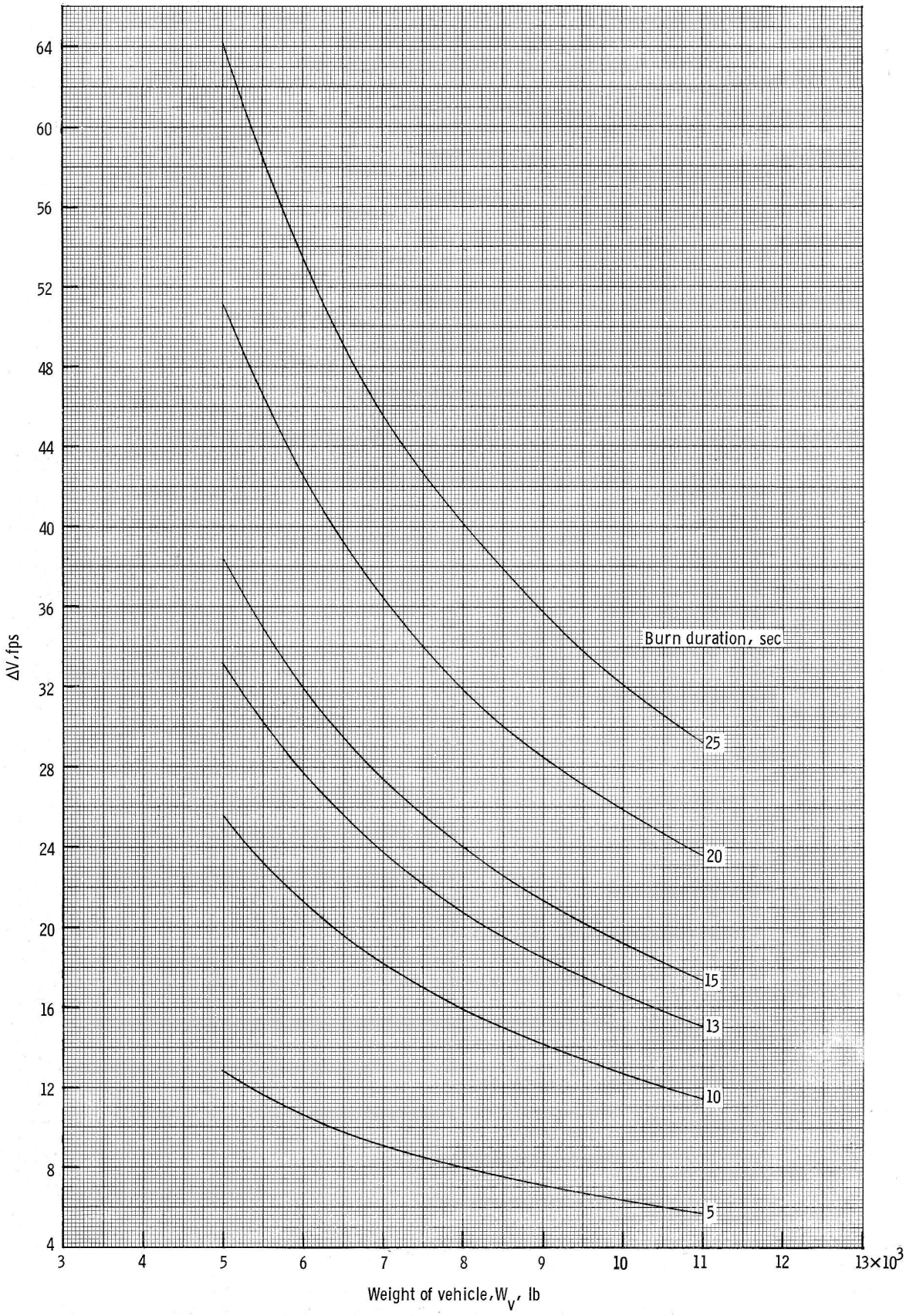

Figure 12-6.1. - Vehicle weight vs ΔV (5 to 25 secs). Staged 4-jet translation.

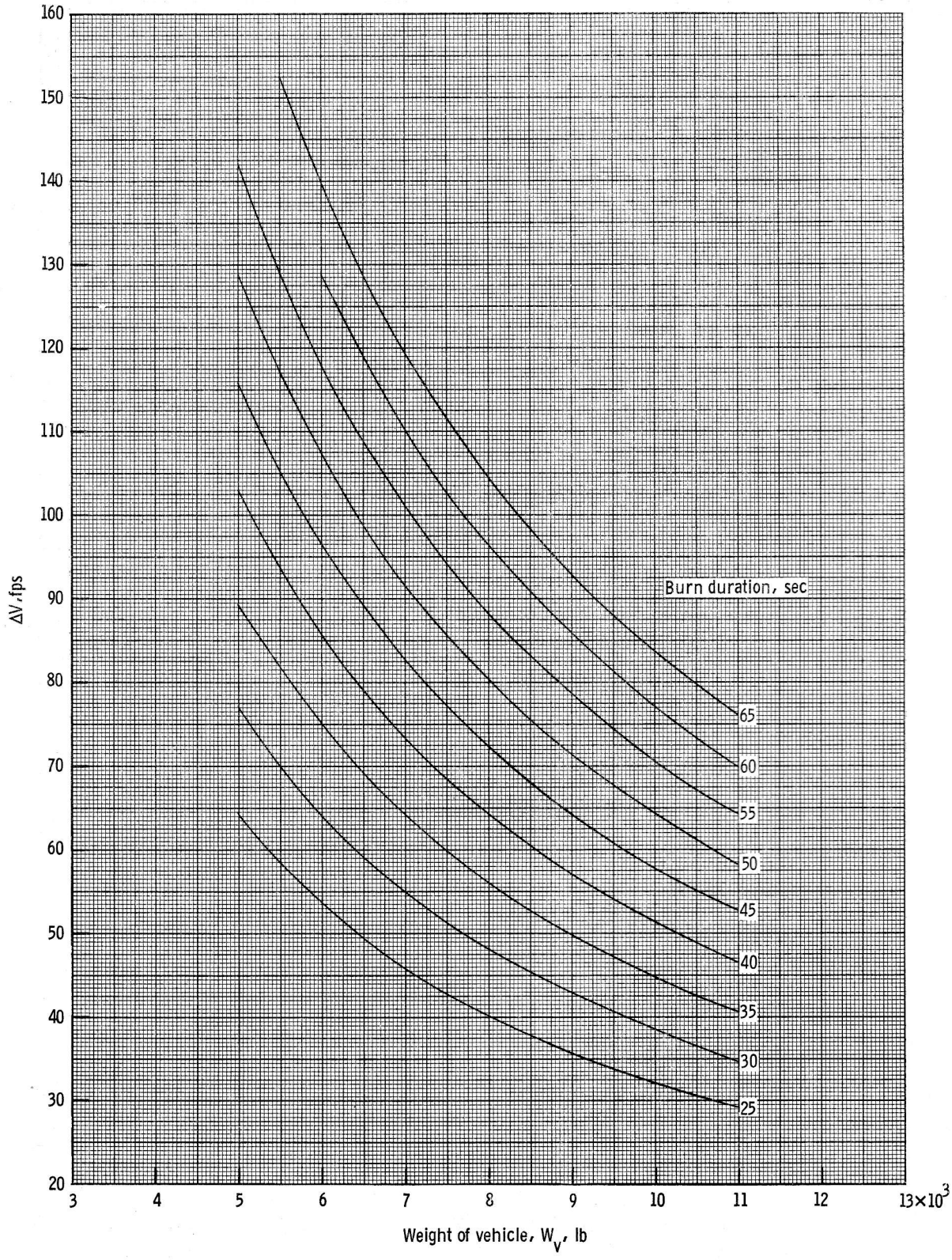

Figure 12-6. 2. - Vehicle weight vs ΔV (25-65 secs). Staged 4-jettranslation.

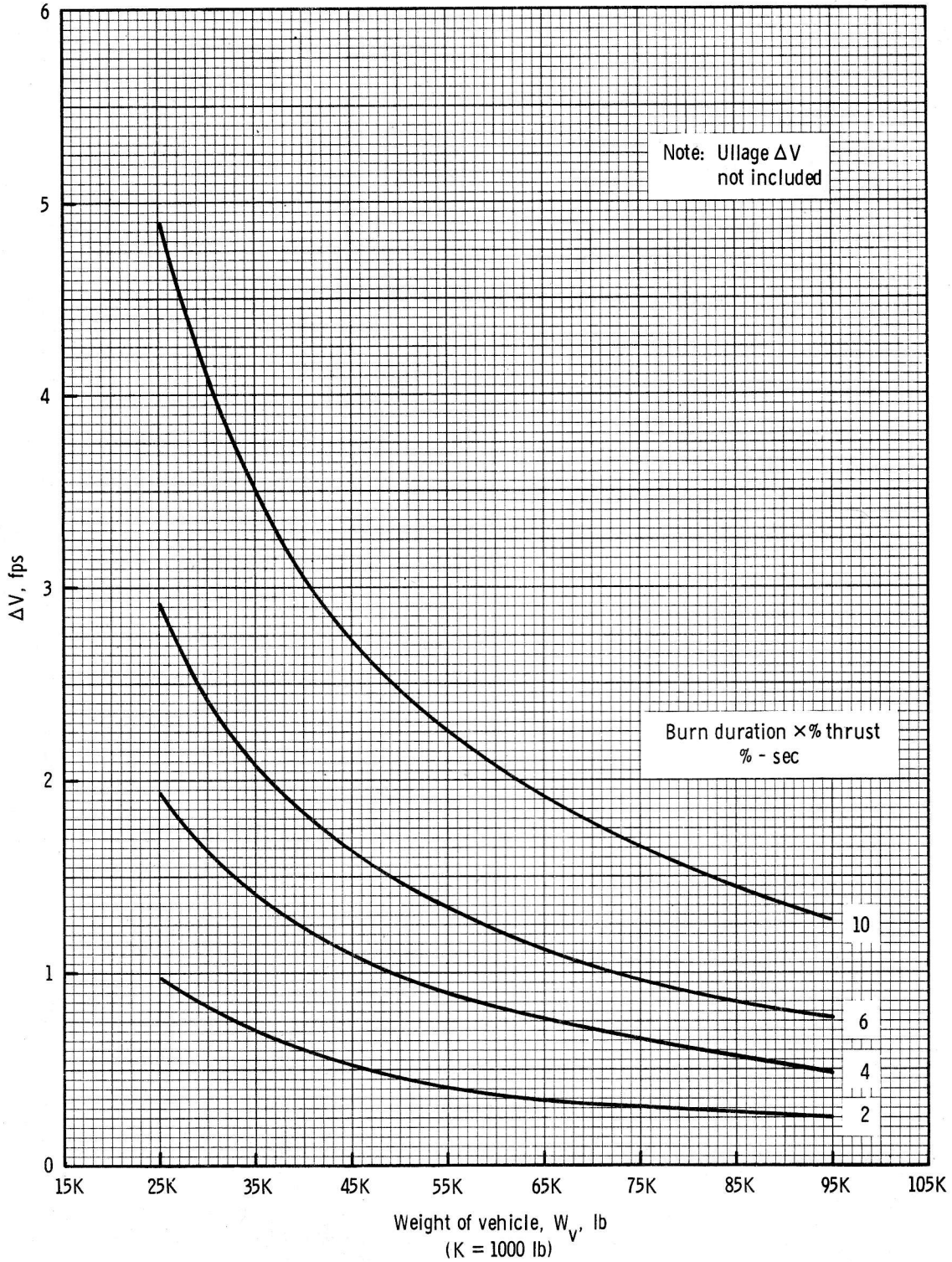

Figure 12-7.1. - Combined CSM/LM weight vs ΔV - 4 RCS jet ullage

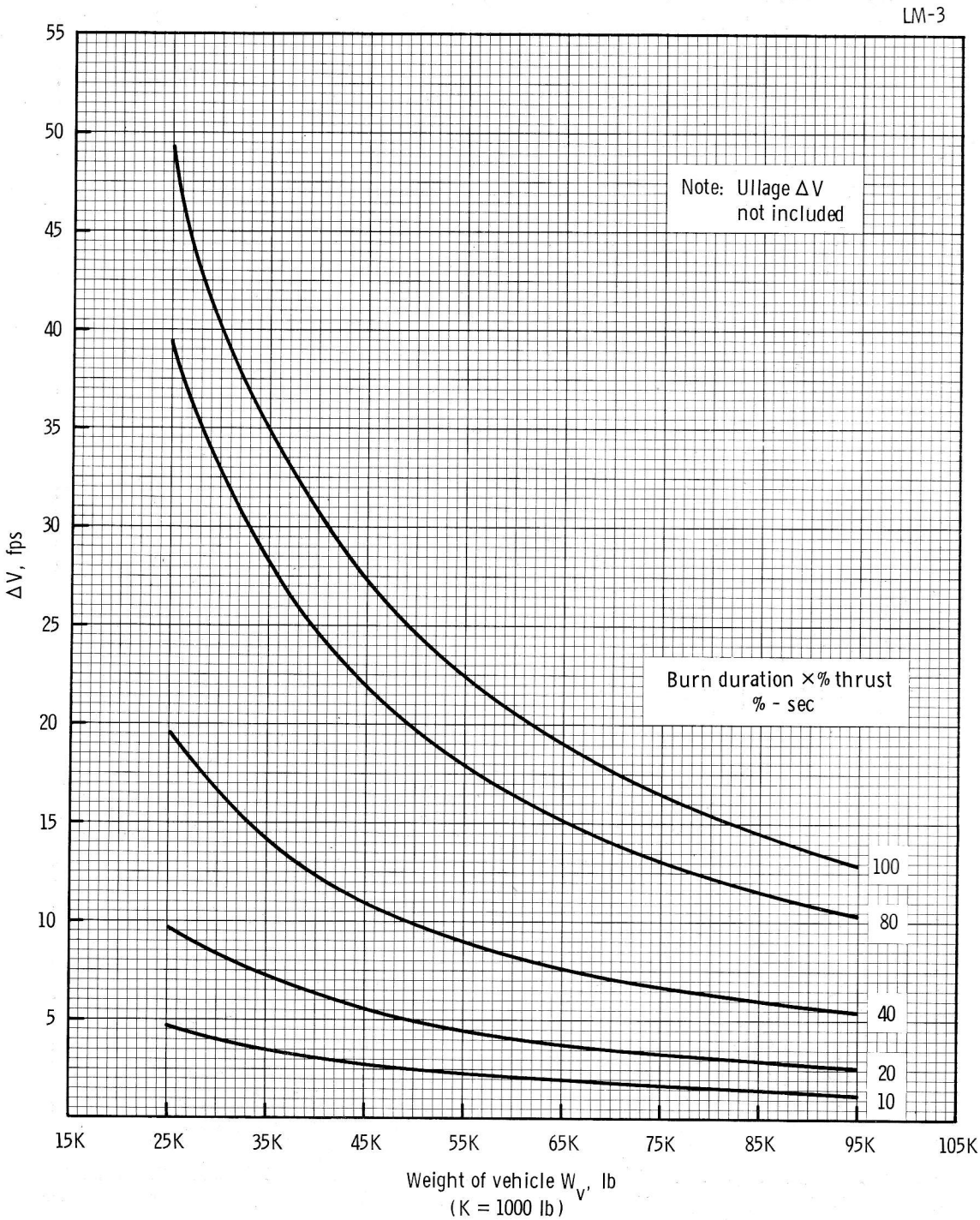

Figure 12-7.2. - Combined CSM/LM weight vs ΔV - 4 RCS jet ullage

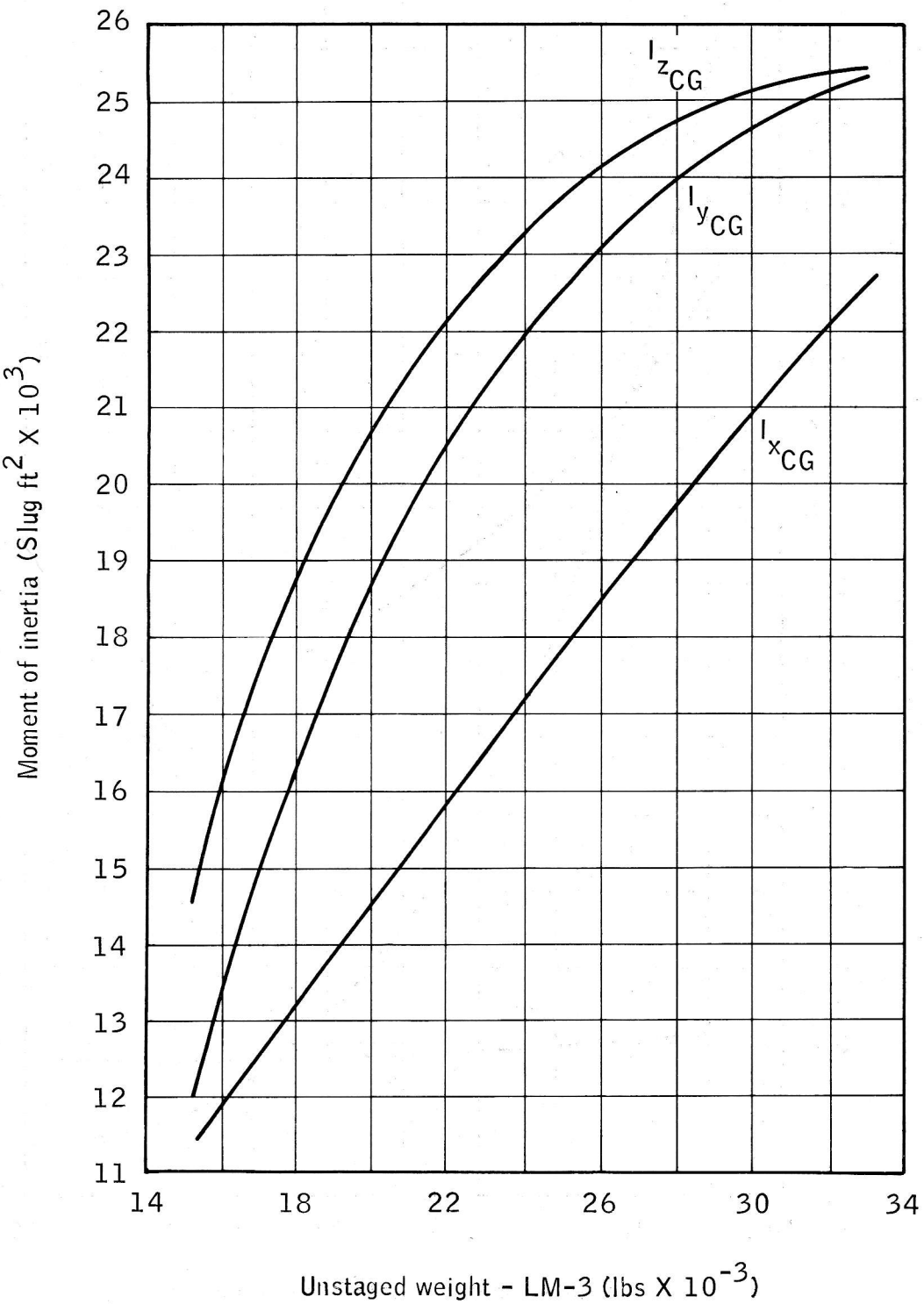

Figure 12-8.- Moment of inertia vs unstaged weight.

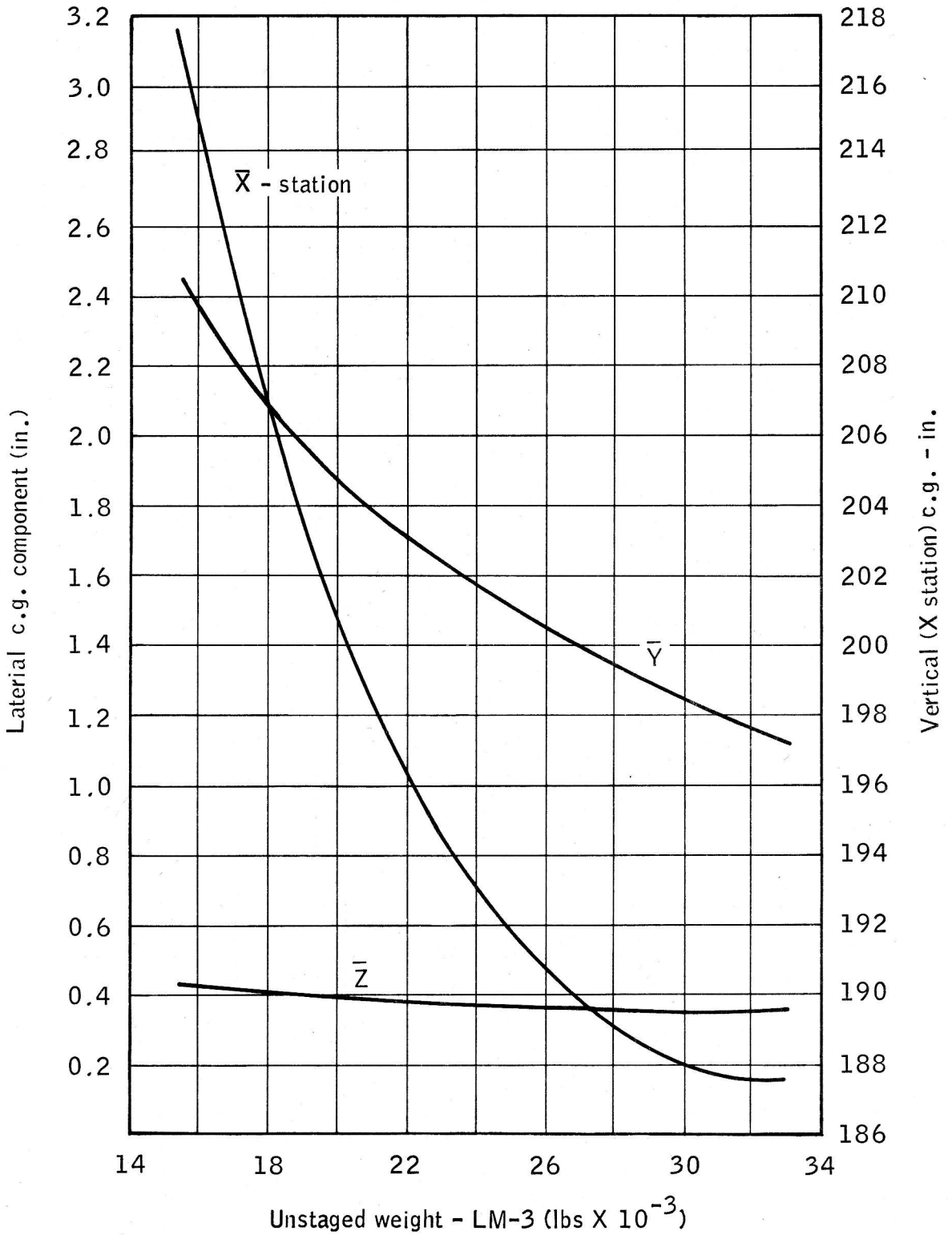

Figure 12-9.- Center of gravity vs unstaged weight.

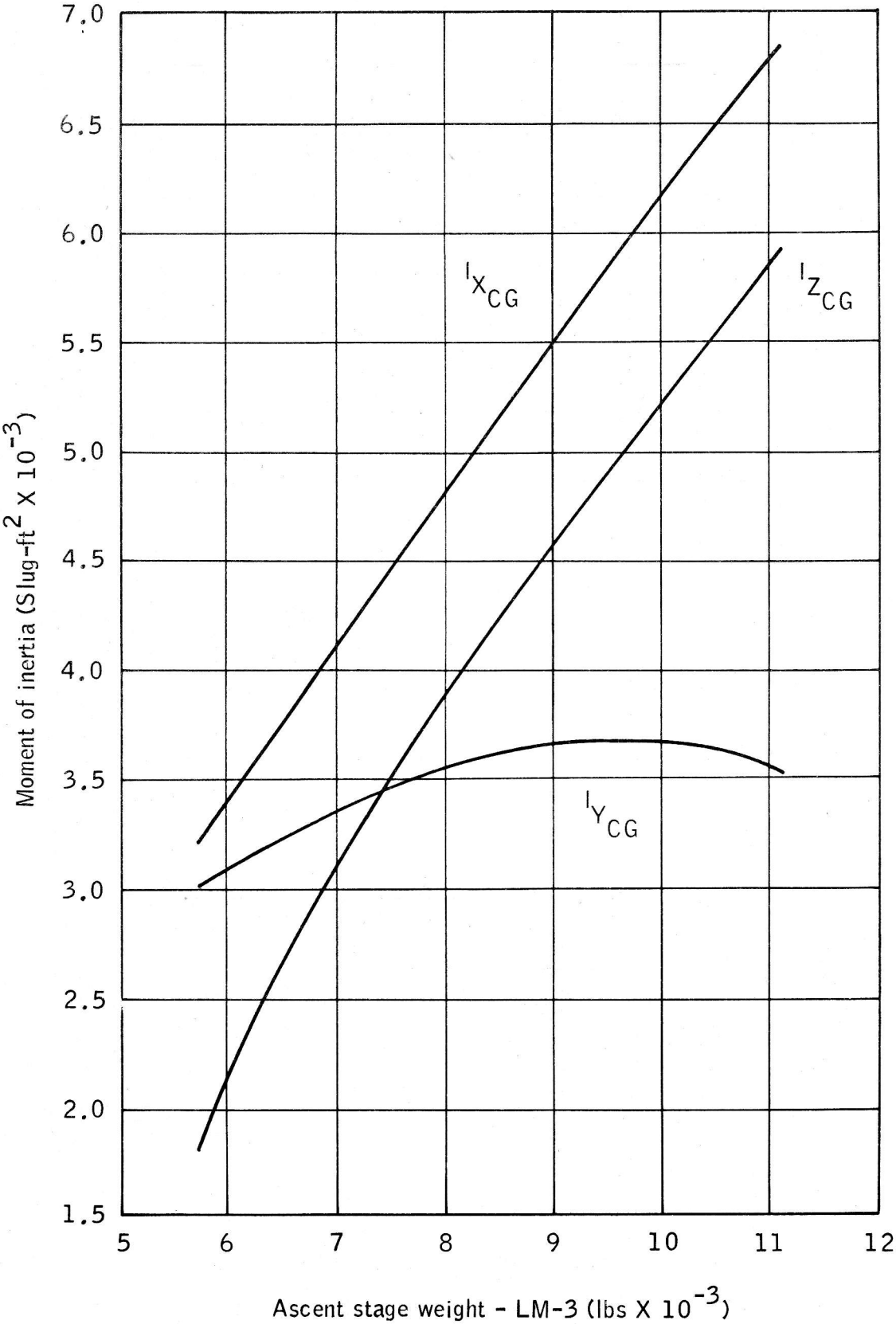

Figure 12-10.- Moment of inertia vs ascent weight.

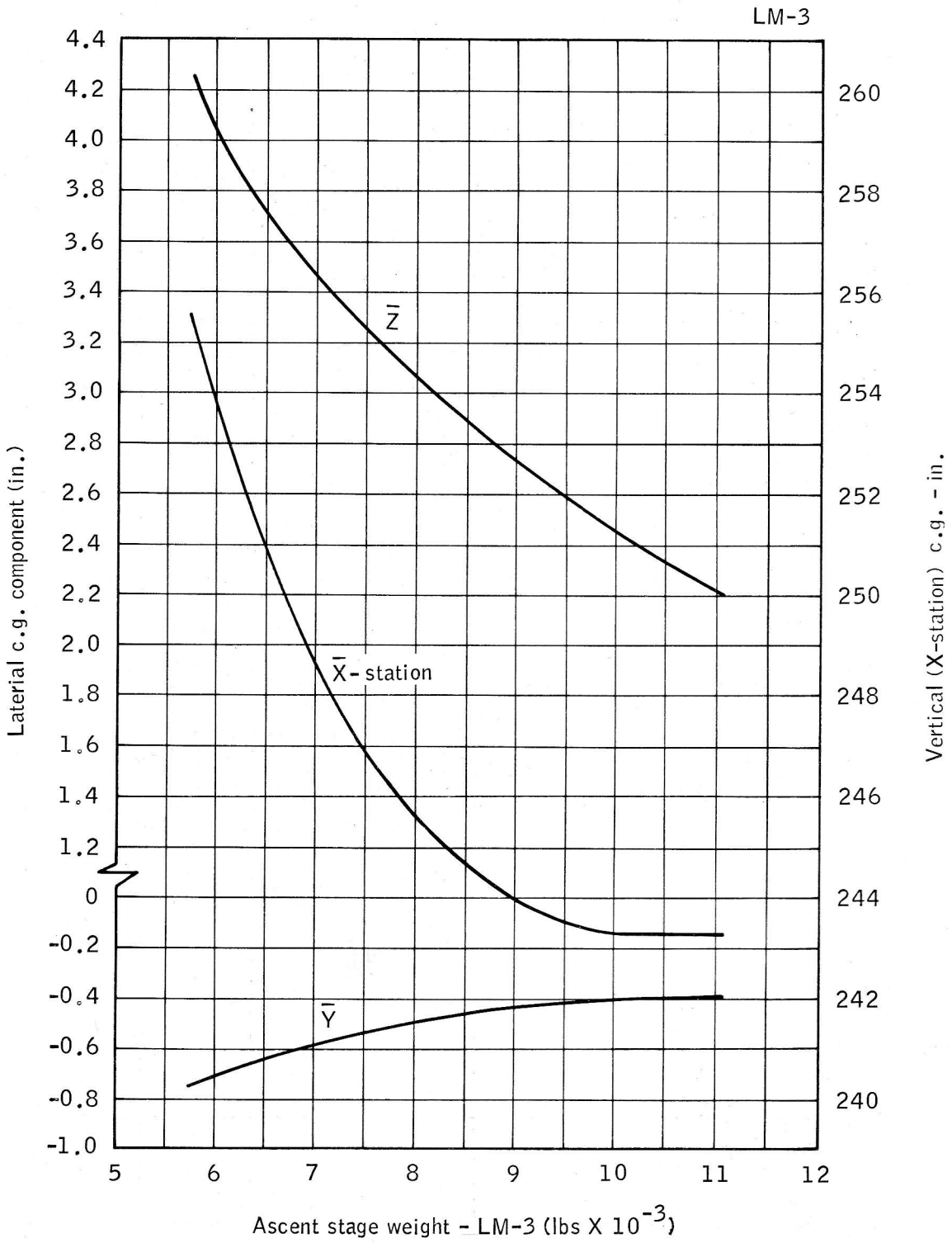

Figure 12-11.- Center of gravity vs ascent stage weight.

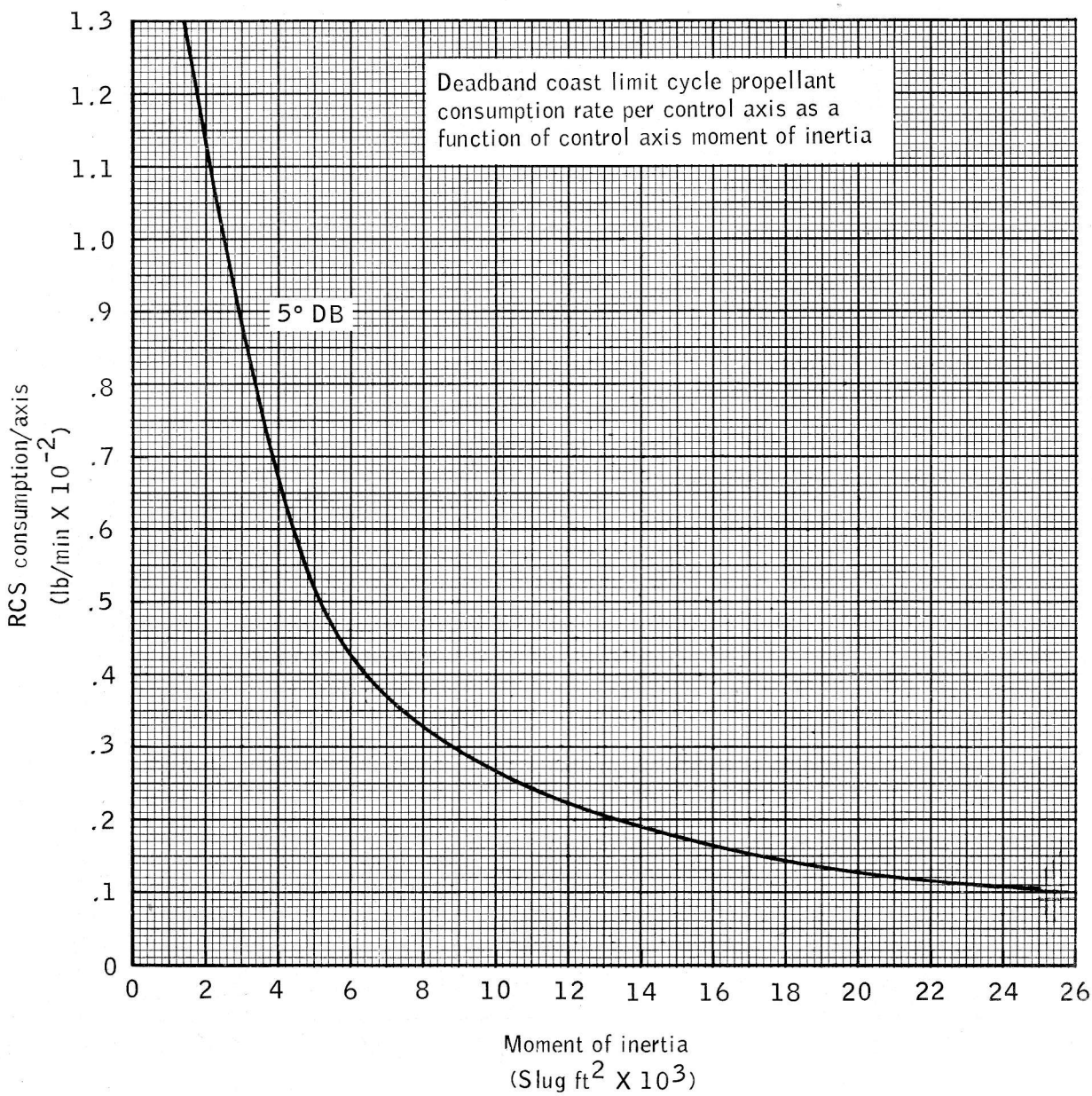

Figure 12-12.- Propellant consumption rate for max deadband, 5°.

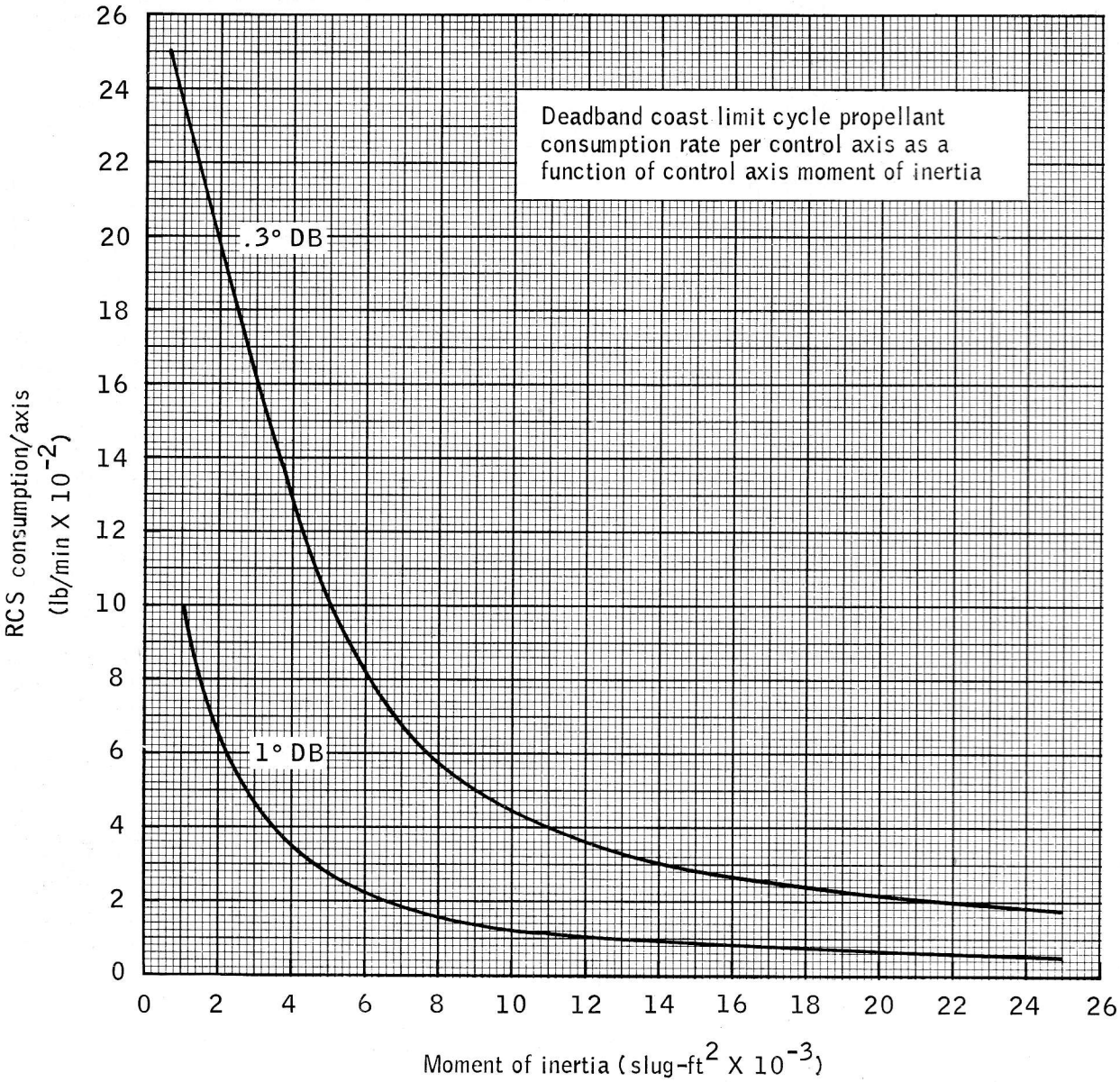

Figure 12-13.- Propellant consumption rate for min deadband, .3°, 1°.

TABLE 12-I.- CAPABILITIES AND LIMITATIONS RCS

	RCS
HELIUM SOURCE PRESSURE	
VOLUME	920 IN^3
PRESSURES	
BURST	7000 PSI
PROOF	4650 PSI
NOMINAL LOADED	3050 PSI
REGULATORS	
CONFIGURATION	SERIES
CLASS I	
PRIMARY	
SETTING	179±2 PSI
LOCKUP	MAX 188 PSI
SECONDARY	
SETTING	185±2 PSI
LOCKUP	MAX 194 PSI
MINIMUM OPERATING PRESSURE	400 PSI
QUAD CHECK VALVES	
PRESSURE	
BURST	750 PSI
PROOF	500 PSI
ΔP DROP	4±1 PSI
CRACKING ΔP	2±.5 PSI
TANK ASSEMBLY	
BURST DISC RUPTURE	234±12 PSID
BLEED VALVE	
CRACK	0 PSI
RESEAT	80 PSI
RELIEF VALVE	
FULL FLOW	238±12 PSI
RESEAT	220 PSI
PROP TANKS VOLUME	
FUEL	3305 IN^3
OX	4112 IN^3
BURST PRESSURE	375 PSI
PROOF PRESSURE	333 PSI

TABLE 12-I.- CAPABILITIES AND LIMITATIONS RCS - Concluded

	RCS
MAIN SHUTOFF, TCA ISOL, XFEED, APS INNCT VALVES	
ACTUATION TIMES	
OPEN	0.25 SEC
CLOSE	0.25 SEC
ACTUATION VOLTAGE	
MAX	32.0 VDC
MIN	18.0 VDC
PRESSURES	
PROOF	360 PSI
BURST	1050 PSI
DROP	2.0±.25 PSI
ENGINES	
NOMINAL THRUST	100 LBS
COOLING	FILM & RADIATION
LIFE	500 SEC PULSE 500 SEC STEADY STATE
INJECTOR TYPE	8 FUEL FOR COOLING 8 ON 8 FOR MAIN CHAMBER 1 ON 1 FOR PREIGNITER
O/F RATIO	2.0/1
FLOW RATES	
OXID (LB/SEC)	0.24
FUEL (LB/SEC)	0.12
THRUSTER CHAMBER PRESSURE	96 PSI
MINIMUM OPERATING TIME	0.013 SEC

13 DEVELOPMENT
FLIGHT
INSTRUMENTATION

LTR	DR	ENGR	DATE	APPROVAL

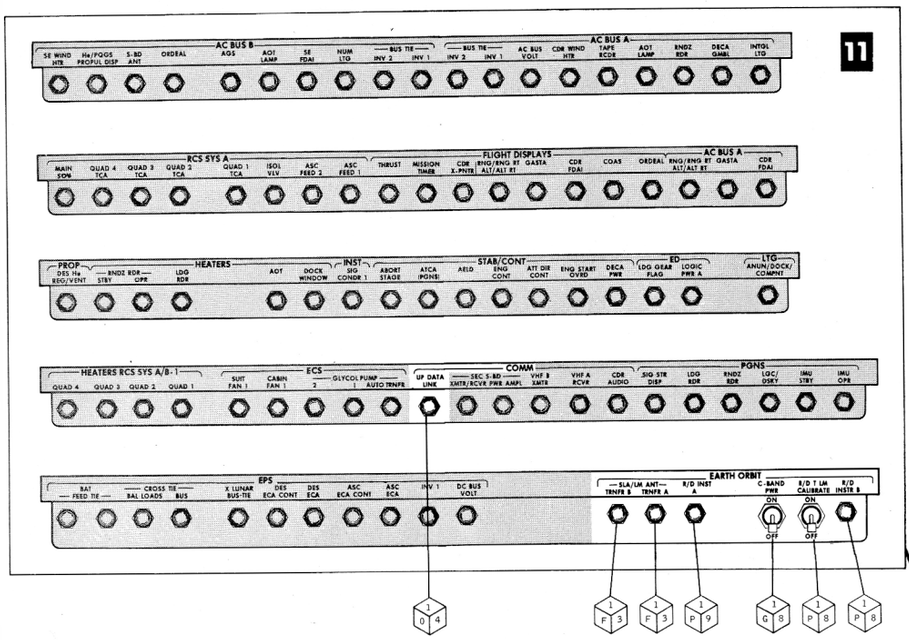

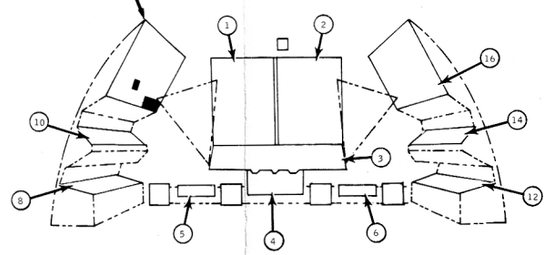

NATIONAL AERONAUTICS & SPACE ADMINISTRATION MANNED SPACECRAFT CENTER · HOUSTON, TEXAS		SIGNATURES	DATE
DFI CONTROL/DISPLAY		DR	3-15-68
		DSGN	4-1-68
		QC	4-1-68
		ENGR	4-1-68
		APP	4-2-68
DWG NO. FIGURE 13-1	SIZE J	FEC	4-1-68
	LM LM-3	AUTH	4-4-68
SHEET 1 OF 1 PAGE 13-1	38.5 X 34		

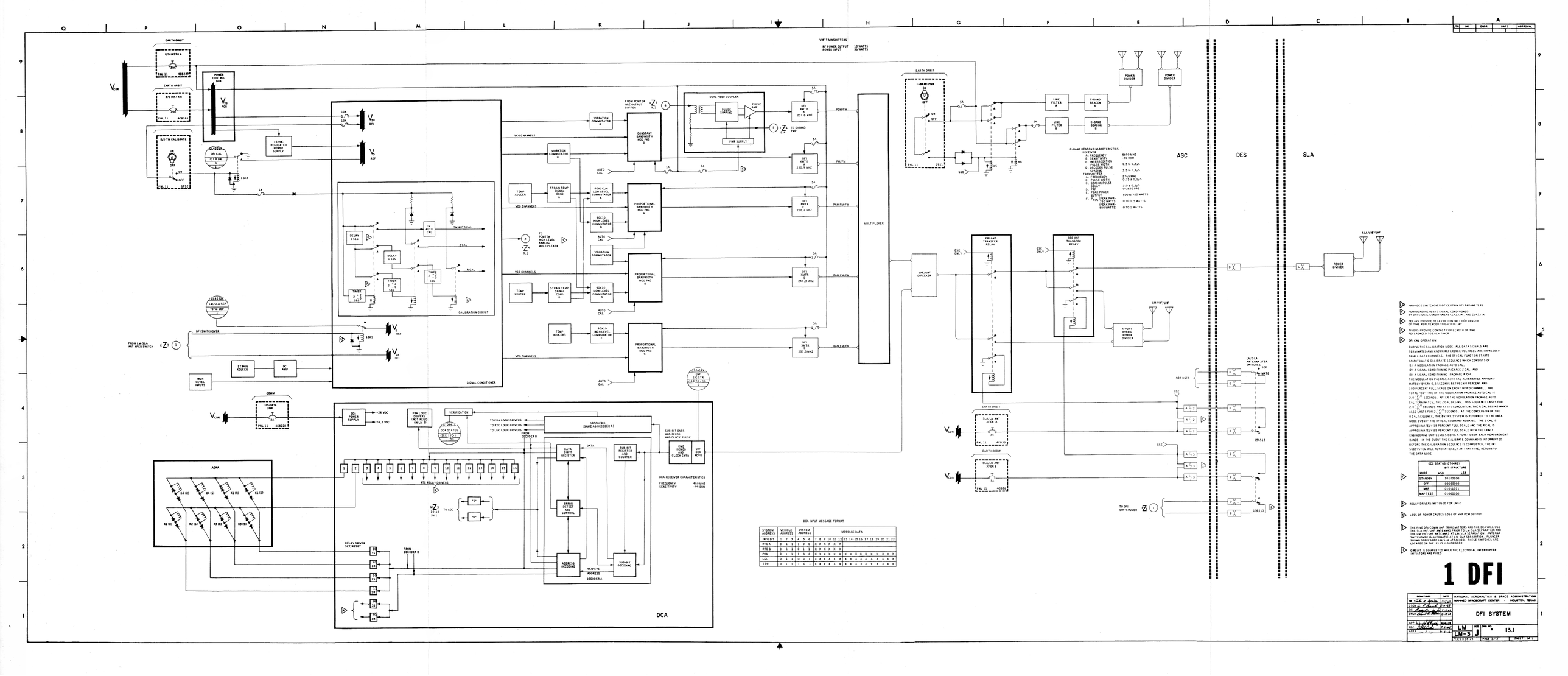
VHF TRANSMITTERS
RF POWER OUTPUT 10 WATTS
POWER INPUT 56 WATTS
EARTH ORBIT
R/D INSTR A
R/D INSTR B
R/D TM CALIBRATE
POWER CONTROL BOX
+5 VDC REGULATED POWER SUPPLY
DFI CAL
SIGNAL CONDITIONER
CALIBRATION CIRCUIT
TM AUTO CAL
T CAL
R CAL
DELAY 5 SEC
TIMER 2 SEC
DFI SWITCHOVER
FROM LM SLA ANT XFER SWITCH
STRAIN XDUCER
DC AMP
HIGH LEVEL INPUTS
COMM
VIBRATION COMMUTATOR G
VIBRATION COMMUTATOR H
TEMP XDUCER
STRAIN TEMP SIGNAL COND A
TO PCM/TEA HIGH LEVEL MUX MULTIPLEXER
VCO CHANNELS
AUTO CAL
CONSTANT BANDWIDTH MOD PKG D
PROPORTIONAL BANDWIDTH MOD PKG A
PROPORTIONAL BANDWIDTH MOD PKG B
PROPORTIONAL BANDWIDTH MOD PKG C
FROM PCM/TEA MHZ OUTPUT BUFFER
DUAL FEED COUPLER
PULSE SHAPING
PULSE AMP
PWR SUPPLY
TO S-BAND AMP
DFI XMTR A 231.8 MHZ
DFI XMTR B 230.0 MHZ
DFI XMTR C 228.2 MHZ
DFI XMTR D 247.3 MHZ
DFI XMTR E 257.3 MHZ
PCM/FM
FM/FM
PAM FM/FM
MULTIPLEXER
VHF/UHF DIPLEXER
EARTH ORBIT
C-BAND PWR
LINE FILTER A
LINE FILTER B
C-BAND BEACON A
C-BAND BEACON B
POWER DIVIDER
C-BAND BEACON CHARACTERISTICS
RECEIVER
A. FREQUENCY 5690 MHZ
B. SENSITIVITY -70 DBM
C. INTERROGATION PULSE WIDTH 0.5 ± 0.8 µS
D. DECODER PULSE SPACING 3.5 ± 0.3 µS
TRANSMITTER
A. FREQUENCY 5765 MHZ
B. PULSE WIDTH 0.75 ± 0.3 µS
C. INTERROGATION DELAY 3.0 ± 0.3 µS
D. PRF 0-2670 PPS
E. PEAK POWER OUTPUT 500 to 750 WATTS
F. PEAK PWR-TSO MODE 0 TO 1.5 WATTS
DSA MODE 500 WATTS 0 TO 1 WATTS
ASC
DES
SLA
FRI ANT TRANSFER RELAY
SEC ANT TRANSFER RELAY
GSE ONLY
4-PORT HYBRID POWER DIVIDER
LM VHF/UHF
SLA VHF/UHF
SLA/LM ANT XFER A
SLA/LM ANT XFER B
LM/SLA ANTENNA XFER SWITCHES
SEP
MATE
NOT USED
GSE
TO DFI SWITCHOVER
154513
156113
DCA
DCA POWER SUPPLY
+24 VDC
+6.5 VDC
PRA LOGIC DRIVERS (NOT REQD ON LM-3)
VERIFICATION
DCA STATUS
TO PRA LOGIC DRIVERS
TO RTC LOGIC DRIVERS
TO LGC LOGIC DRIVERS
DECODER B (SAME AS DECODER A)
SUB-BIT ONES AND ZEROS AND CLOCK PULSE
CWD DEMOD AND CLOCK CNTR
UHF A/B RELAY
DCA RECEIVER CHARACTERISTICS
FREQUENCY 450 MHZ
SENSITIVITY -99 DBM
AEAA
RTC RELAY DRIVERS
DATA SMT REGISTER
DATA
SUB-BIT REGISTER AND COUNTER
ERROR DETECT AND CONTROL
ADDRESS DECODING
SUB-BIT DECODING
VEH/SYS ADDRESS
DECODER A
RELAY DRIVER SET/RESET
FROM DECODER B
TO LGC
DCA INPUT MESSAGE FORMAT
SYSTEM ADDRESS
VEHICLE ADDRESS
SYSTEM ADDRESS
MESSAGE DATA
INFO BIT
RTC A
RTC B
PRA
LGC
TEST
DCA STATUS (GTD441) BIT STRUCTURE
MODE MSB LSB
STANDBY 10100100
OFF 00000000
MAP 01011011
MAP TEST 01000100
RELAY DRIVERS NOT USED FOR LM-2
LOSS OF POWER CAUSES LOSS OF VHF PCM OUTPUT
THE FIVE DFI/COMM UHF TRANSMITTERS AND THE DCA WILL USE THE SLA VHF/UHF ANTENNAS PRIOR TO LM SLA SEPARATION AND THE LM VHF/UHF ANTENNAS AFTER SEPARATION. THE ANTENNA SWITCHOVER IS AUTOMATIC AT LM SLA SEPARATION. PLUNGER SHOWN DEPRESSED (LM SLA ATTACHED). THESE SWITCHES ARE LOCATED ON THE PLUS Y OUTRIGGER
CIRCUIT IS COMPLETED WHEN THE ELECTRICAL INTERRUPTER ACTUATORS ARE FIRED
PROVIDES SWITCHOVER OF CERTAIN DFI PARAMETERS
PCM MEASUREMENTS SIGNAL CONDITIONED BY DFI SIGNAL CONDITIONER (LA622)X AND (LA421)X
DELAYS PROVIDE DELAY OF CONTACT FOR LENGTH OF TIME REFERENCED TO EACH DELAY
TIMERS PROVIDE CONTACT FOR LENGTH OF TIME REFERENCED TO EACH TIMER
DFI CAL OPERATION
DURING THE CALIBRATION MODE, ALL DATA SIGNALS ARE TERMINATED AND KNOWN REFERENCE VOLTAGES ARE IMPRESSED ON ALL DATA CHANNELS. THE DFI CAL FUNCTION STARTS AN AUTOMATIC CALIBRATE SEQUENCE WHICH CONSISTS OF
(1) A MODULATION PACKAGE AUTO CAL,
(2) A SIGNAL CONDITIONING PACKAGE Z CAL, AND
(3) A SIGNAL CONDITIONING PACKAGE R CAL.
THE MODULATION PACKAGE AUTO CAL ALTERNATES APPROXIMATELY EVERY 0.5 SECONDS BETWEEN 5 PERCENT AND 100 PERCENT FULL SCALE ON EACH TM VCO CHANNEL. THE TOTAL ON-TIME OF THE MODULATION PACKAGE AUTO CAL IS 2.0 +2.0 -0.0 SECONDS. AFTER THE MODULATION PACKAGE AUTO CAL TERMINATES, THE Z CAL BEGINS. THIS SEQUENCE LASTS FOR 2.0 +2.0 -0.0 SECONDS AND AT ITS CONCLUSION, THE R CAL BEGINS WHICH ALSO LASTS FOR 2 +2.0 -0.0 SECONDS. AT THE CONCLUSION OF THE R CAL SEQUENCE, THE ENTIRE SYSTEM IS RETURNED TO THE DATA MODE EVEN IF THE DFI CAL COMMAND REMAINS. THE Z CAL IS APPROXIMATELY 15 PERCENT FULL SCALE AND THE R CAL IS APPROXIMATELY 85 PERCENT FULL SCALE WITH THE EXACT ENGINEERING UNIT LEVELS BEING A FUNCTION OF EACH MEASUREMENT RANGE. IN THE EVENT THE CALIBRATE COMMAND IS INTERRUPTED BEFORE THE CALIBRATION SEQUENCE IS COMPLETED, THE DFI SUBSYSTEM WILL AUTOMATICALLY AT THAT TIME, RETURN TO THE DATA MODE
1 DFI
SIGNATURE DATE
DR
DSGN
DC
ENGR
APP
APP
REVS
NATIONAL AERONAUTICS & SPACE ADMINISTRATION MANNED SPACECRAFT CENTER - HOUSTON, TEXAS
DFI SYSTEM
LM MSB 13.1
LM-3 J
13.1-3 20 JS
PAGE 13-2
SHEET 1 OF 1

APOLLO

LMSH

LUNAR MODULE SYSTEMS HANDBOOK

VEHICLE
LM-3

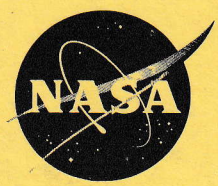

FCD
MSC
NASA