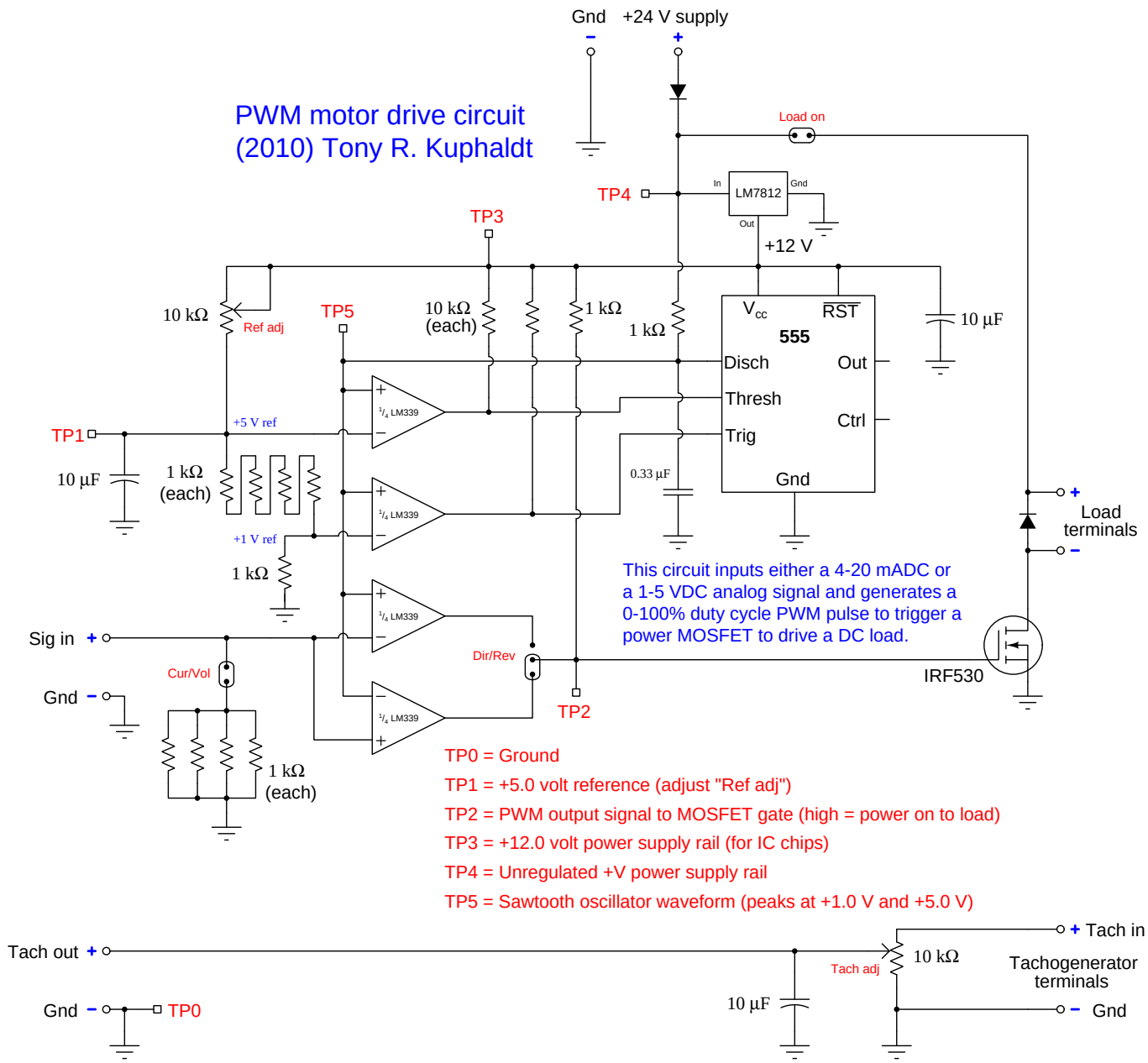
PWM motor drive circuit
(2010) Tony R. Kuphaldt
Gnd
+24 V supply
Load on
TP4
LM7812
In
Gnd
Out
+12 V
TP3
10 kΩ
Ref adj
TP5
10 kΩ
(each)
1 kΩ
1 kΩ
Vcc
RST
555
Disch
Out
Thresh
Ctrl
Trig
Gnd
10 µF
TP1
+5 V ref
10 µF
1 kΩ
(each)
0.33 µF
+1 V ref
1 kΩ
Load
terminals
This circuit inputs either a 4-20 mADC or
a 1-5 VDC analog signal and generates a
0-100% duty cycle PWM pulse to trigger a
power MOSFET to drive a DC load.
Sig in
Dir/Rev
IRF530
Cur/Vol
Gnd
TP2
1 kΩ
(each)
TP0 = Ground
TP1 = +5.0 volt reference (adjust "Ref adj")
TP2 = PWM output signal to MOSFET gate (high = power on to load)
TP3 = +12.0 volt power supply rail (for IC chips)
TP4 = Unregulated +V power supply rail
TP5 = Sawtooth oscillator waveform (peaks at +1.0 V and +5.0 V)
Tach out
Tach in
Tach adj
10 kΩ
Tachogenerator
terminals
Gnd
TP0
10 µF
Gnd